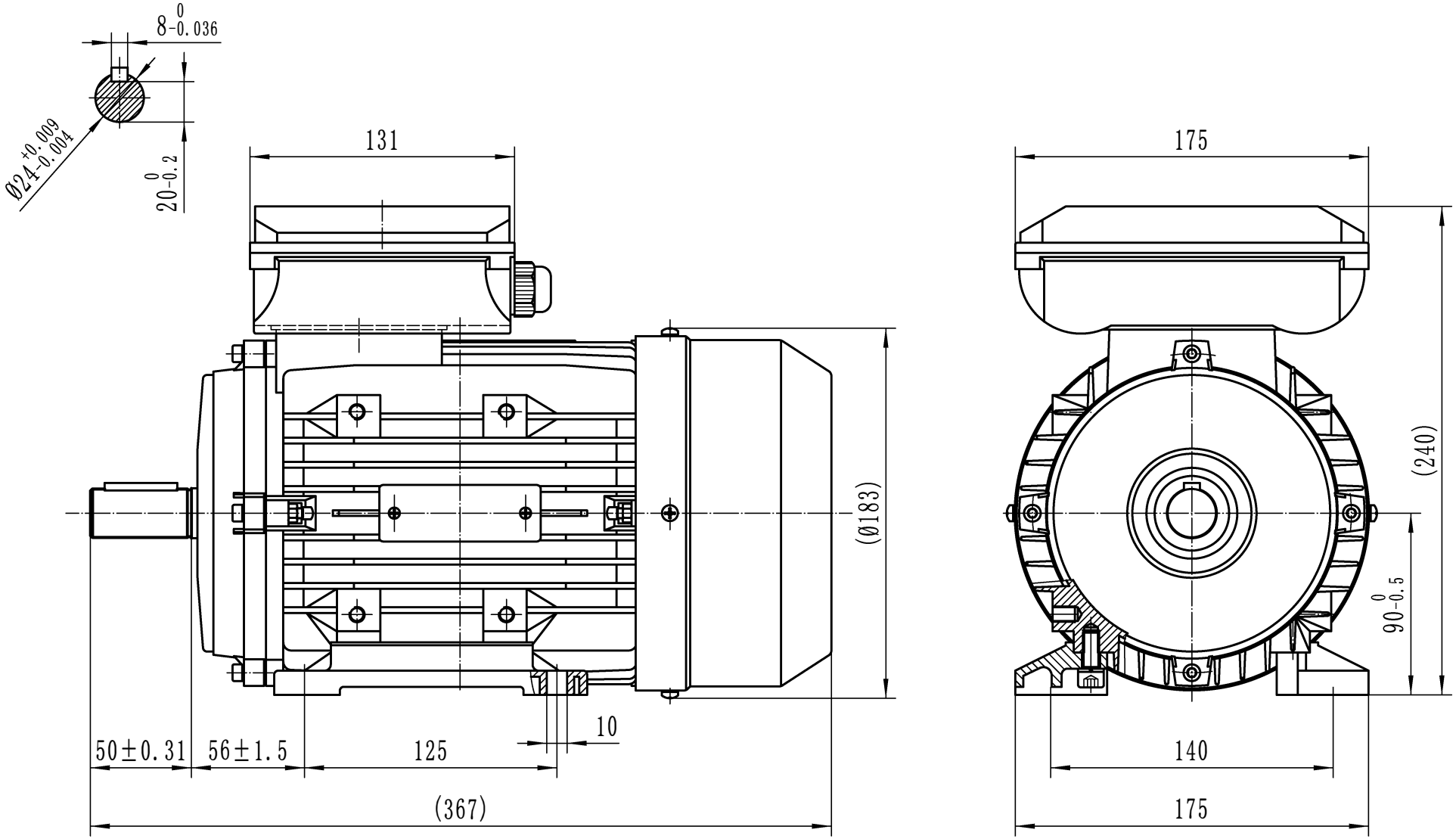

Drawn By	Date	TCC 90L B3
A442313	27/11/2017	
Approved by	Date	
L. Overton	27/11/2017	
Issue No =	Date	
A401/001/18	27/11/2017	

www.tecmotors.co.uk