PowerXL DM1 and DM1 PRO Series VFDs

Effective September 2020

Installation manual

Powering Business Worldwide

DISCLAIMER OF WARRANTIES AND LIMITATION OF LIABILITY

The information, recommendations, descriptions, and safety notations in this document are based on manufacturer's experience and judgment and may not cover all contingencies. If further information is required, a sales representative should be consulted. Sale of the product shown in this literature is subject to the terms and conditions outlined in appropriate manufacturer selling policies or other contractual agreement between manufacturer and the purchaser.

THERE ARE NO UNDERSTANDINGS, AGREEMENTS, WARRANTIES, EXPRESSED OR IMPLIED, INCLUDING WARRANTIES OF FITNESS FOR A PARTICULAR PURPOSE OR MERCHANTABILITY, OTHER THAN THOSE SPECIFICALLY SET OUT IN ANY EXISTING CONTRACT BETWEEN THE PARTIES. ANY SUCH CONTRACT STATES THE ENTIRE OBLIGATION OF THE MANUFACTURER. THE CONTENTS OF THIS DOCUMENT SHALL NOT BECOME PART OF OR MODIFY ANY CONTRACT BETWEEN THE PARTIES.

In no event will the manufacturer be responsible to the purchaser or user in contract, in tort (including negligence), strict liability, or otherwise for any special, indirect, incidental, or consequential damage or loss whatsoever, including but not limited to damage or loss of use of equipment, plant or power system, cost of capital, loss of power, additional expenses in the use of existing power facilities, or claims against the purchaser or user by its customers resulting from the use of the information, recommendations, and descriptions contained herein. The information contained in this manual is subject to change without notice.

Cover Photo: Eaton PowerXL Series Drive

Support services

Support services

The goal of Eaton is to ensure your greatest possible satisfaction with the operation of our products.
We are dedicated to providing fast, friendly, and accurate assistance. That is why we offer you so many ways to get the support you need. Whether it is by phone, fax, or email, you can access Eaton's support information 24 hours a day, seven days a week.

Our wide range of services is listed below.

You should contact your local distributor for product pricing, availability, ordering, expediting, and repairs.

Website

Use the Eaton Website to find product information.
You can also find information on local distributors or Eaton's sales offices.

Website address

www.eaton.com/drives

EatonCare Customer Support Center

Call the EatonCare Support Center if you need assistance with placing an order, stock availability or proof of shipment, expediting an existing order, emergency shipments, product price information, returns other than warranty returns, and information on local distributors or sales offices.

Voice: 877-ETN-CARE (386-2273) (8:00 a.m.–6:00 p.m. EST)
After-Hours Emergency: 800-543-7038 (6:00 p.m.–8:00 a.m. EST)

Drives Technical Resource Center

Voice: 877-ETN-CARE (386-2273) option 2, option 6
(8:00 a.m.–5:00 p.m. Central Time U.S. [UTC –6])
email: TRCDrives@Eaton.com

For customers in Europe, contact

Phone: +49 (0) 228 6 02-3640
Hotline: +49 (0) 180 5 223822
email: AfterSalesEGBonn@Eaton.com
www.eaton.com/moeller/aftersales

Table of contents

Definitions and symbols viii
Hazardous high voltage viii
DANGER
5 MIN viii
Warnings and cautions viii
EMC warnings and cautions ix

CHAPTER 1—POWERXL DM1 SERIES OVERVIEW. 1
Catalog number system 2
Power ratings and product selection 3
Accessories 5
Service and warranty. 6

CHAPTER 2—RECEIVING AND INSPECTION 6
Unpacking 7
Proper use 8
Maintenance and inspection 8
Storage 8

CHAPTER 3—ENGINEERING CONSIDERATIONS 9
Introduction 9
Electrical power network. 9

CHAPTER 4—MECHANICAL INSTALLATION. 11
Electrical installation warnings and cautions 11
Standard mounting instructions 11
FR1 mounting instructions 17
FR2 mounting instructions 18
FR3 mounting instructions 19
FR4 mounting instructions 20
Mounting instruction for option cards 21
NEMA 1 kit 23
Component list for DM1 drive with NEMA 1 kit 23
Component list for DM1 NEMA 1 kit 23
Installation steps for DM1 FR1 NEMA 1 kit 24
Installation steps for DM1 FR2-FR4 NEMA 1 kits 26
Keypad remote mounting kit 29
Keypad mounting template 31

CHAPTER 5—ELECTRICAL INSTALLATION 32
Electrical installation warnings and cautions 32
Power wiring selection 32
Cable selection: Power and motor leads 32
Line (mains) and motor cable installation 32
Cable and fuse guidelines 35
Installation overview for DM1 38
Control board layout 39
Factory-set control terminal functions. 40
Cable routing 41
Wiring the VFD 41

Table of contents, continued

Checking the cable and motor insulation 41
EMC installation 42
EMC measures in the control panel 42
Earthing 42
Screen earth kit 42
Installation requirements 43
International EMC protection cable requirements 44
Installation in corner-grounded network and IT system 45
I/O connection 45

APPENDIX A—TECHNICAL DATA AND SPECIFICATIONS 46
Technical data 46

APPENDIX B—INSTALLATION GUIDELINES 49
Cable and fuse sizing 49
Temperature deratings 54
Heat loss data 59
Brake resistor sizing 60

APPENDIX C—DIMENSION DRAWINGS 63

APPENDIX D—SAFETY INSTRUCTIONS FOR UL AND CUL 83
UL Standards compliance 83
Field wiring 84

APPENDIX E—STO FUNCTION 85
Description of safety function 85
Safety architecture and reliability block diagram 86
Power supply and input/output 86
Environmental and EMC conditions 87
Requirement for installation, commission, maintenance 87
Requirements of proof test 89

APPENDIX F—UL CERTIFICATE OF COMPLIANCE AND CE DECLARATION OF CONFORMITY 90
UL Certificate of Compliance 90
CE Declaration of Conformity 90

List of figures

Figures

Figure 1. Rating label. 1
Figure 2. Catalog numbering system. 2
Figure 3. Unpacking FR1, FR2, FR3, and FR4. 7
Figure 4. AC power networks with grounded neutral point (TN-/TT networks).. 9
Figure 5. Location of the EMC/MOV screw in frame 1. 10
Figure 6. Location of the EMC/MOV screws in frames 2-4. 10
Figure 7. Mounting orientation.. 12
Figure 8. EMC-Compliant setup - 230 Vac, 460/480 Vac, 600 Vac. 43
Figure 9. Cable description. 44
Figure 10. Location of the EMC/MOV screw in frame 1. 45
Figure 11. Location of the EMC/MOV screws in frame 2-4. 45
Figure 12. DM1 Pro FR1 without NEMA 1 kit dimension drawing. 65
Figure 13. DM1 FR1 without NEMA 1 kit dimension drawing. 66
Figure 14. DM1 Pro FR2 without NEMA 1 kit dimension drawing. 67
Figure 15. DM1 FR2 without NEMA 1 kit dimension drawing. 68
Figure 16. DM1 Pro FR3 without NEMA 1 kit dimension drawing. 69
Figure 17. DM1 FR3 without NEMA 1 kit dimension drawing.. 70
Figure 18. DM1 Pro FR4 without NEMA 1 kit dimension drawing. 71
Figure 19. DM1 FR4 without NEMA 1 kit dimension drawing. 72
Figure 20. DM1 FR4 without NEMA 1 kit dimension drawing. 73
Figure 21. DM1 FR4 without NEMA 1 kit dimension drawing. 74
Figure 22. DM1 Pro FR1 with NEMA 1 kit dimension drawing. 75
Figure 23. DM1 FR1 with NEMA 1 kit dimension drawing.. 76
Figure 24. DM1 Pro FR2 with NEMA 1 kit dimension drawing. 77
Figure 25. DM1 FR2 with NEMA 1 kit dimension drawing.. 78
Figure 26. DM1 Pro FR3 with NEMA 1 kit dimension drawing. 79
Figure 27. DM1 FR3 with NEMA 1 kit dimension drawing. 80
Figure 28. DM1 Pro FR4 with NEMA 1 kit dimension drawing. 81
Figure 29. DM1 FR4 with NEMA 1 kit dimension drawing.. 82
Figure 30. Functional block diagram. 86
Figure 31. Reliability block diagram. 86
Figure 32. STO terminal block in DM1 control board. 88
Figure 33. Thermistor STO dry contact wiring diagram. 89

List of tables

Tables

Table 1. Common abbreviations. 1
Table 2. PowerXL DM1 Series drives 230 V 3-phase input. 3
Table 3. PowerXL DM1 Series drives 480 V 3-phase input. 3
Table 4. PowerXL DM1 PRO Series drives 115 V single phase input. 3
Table 5. PowerXL DM1 PRO Series drives 230 V single phase input. 4
Table 6. PowerXL DM1 PRO Series drives 230 V 3-phase input. 4
Table 7. PowerXL DM1 PRO Series drives 480 V 3-phase input. 4
Table 8. PowerXL DM1 PRO Series drives 575 V 3-phase input. 5
Table 9. PowerXL Series - DM1 NEMA 1 conversion kits. 5
Table 10. PowerXL Series - DM1 communication card kits. 5
Table 11. PowerXL Series - DM1 remote keypad kits. 5
Table 12. PowerXL Series - DM1 demo units. 5
Table 13. PowerXpert in control software. 5
Table 14. Maintenance measures and intervals. 8
Table 15. Approximate mounting dimensions in inches (mm). 13
Table 16. Approximate space requirements in inches (mm). 15
Table 17. Screw quantities. 23
Table 18. Conduit fitting for wires. 25
Table 19. Stripping lengths. 33
Table 20. Connection sizes and torques①②③. 33
Table 21. North America cable and fuse sizes①②④. 35
Table 22. International cable and fuse sizes①②. 37
Table 23. I/O connection. 40
Table 24. Environment EMC levels①. 44
Table 25. Motor power cable EMC guidelines. 44
Table 26. Cable categories. 44
Table 27. PowerXL DM1 Series specifications. 46
Table 28. UL cable and fuse sizes. 49
Table 29. IEC cable and fuse sizes. 52
Table 30. Temperature derating (VT). 55
Table 31. Temperature derating (CT). 57
Table 32. Losses, cooling requirements, and audible noise. 59
Table 33. Dynamic brake resistors. 60
Table 34. Input current scaling. 62
Table 35. Power factor and THDi. 64
Table 36. Connection sizes and torques①②. 84
Table 37. Safety-related parameters. 85

Read this manual thoroughly and make sure you understand the procedures before you attempt to install, set up, operate or carry out any maintenance work on this PowerXL Adjustable Frequency Drive.

Definitions and symbols

WARNING

This symbol indicates high voltage. It calls your attention to items or operations that could be dangerous to you and other persons operating this equipment. Read the message and follow the instructions carefully.

This symbol is the "Safety Alert Symbol." It occurs with either of two signal words: CAUTION or WARNING, as described below.

WARNING

Indicates a potentially hazardous situation which, if not avoided, can result in serious injury or death.

CAUTION

Indicates a potentially hazardous situation which, if not avoided, can result in minor to moderate injury, or serious damage to the product. The situation described in the CAUTION may, if not avoided, lead to serious results. Important safety measures are described in CAUTION (as well as WARNING).

Hazardous high voltage

WARNING

Motor control equipment and electronic controllers are connected to hazardous line voltages. When servicing drives and electronic controllers, there may be exposed components with housings or protrusions at or above line potential. Extreme care should be taken to protect against shock.

- **Stand on an insulating pad and make it a habit to use only one hand when checking components.**
- **Always work with another person in case an emergency occurs.**
- **Disconnect power before checking controllers or performing maintenance.**
- **Be sure equipment is properly earthed.**
- **Wear safety glasses whenever working on electronic controllers or rotating machinery.**

WARNING

The components in the drive's power section remain energized after the supply voltage has been switched off. After disconnecting the supply, wait at least five minutes before removing the cover to allow the intermediate circuit capacitors to discharge.

Pay attention to hazard warnings!

DANGER
5 MIN

WARNING

Electric shock hazard—risk of injuries! Carry out wiring work only if the unit is de-energized.

WARNING

Do not perform any modifications on the AC drive when it is connected to mains.

Warnings and cautions

WARNING

Be sure to ground the unit following the instructions in this manual. Ungrounded units may cause electric shock and/or fire.

WARNING

This equipment should only be installed, adjusted, and serviced by qualified electrical maintenance personnel familiar with the construction and operation of this type of equipment and the hazards involved. Failure to observe this precaution could result in death or severe injury.

WARNING

Components within the drive are live when it is connected to power. Contact with this voltage is extremely dangerous and may cause death or severe injury.

WARNING

Line terminals (L1, L2, L3), motor terminals (U, V, W) and the brake resistor terminals (R+, R–) are live when the drive is connected to power, even if the motor is not running. Contact with this voltage is extremely dangerous and may cause death or severe injury.

EMC warnings and cautions

⚠ WARNING

In a residential environment, this product may cause radio interference, in which case supplementary mitigation measures may be required.

⚠ WARNING

- **This type of PDS is not intended to be used on a low-voltage public network which supplies residential premises.**
- **Radio frequency interference is expected if used on such a network.**

⚠ CAUTION

This device complies with part 15 of the FCC Rules. Operation is subject to the following two conditions: (1) This device may not cause harmful interference, and (2) this device must accept any interference received, including interference that may cause undesired operation.

⚠ WARNING

Even though the control I/O terminals are isolated from line voltage, the relay outputs and other I/O terminals may have dangerous voltage present even when the drive is disconnected from power. Contact with this voltage is extremely dangerous and may cause death or severe injury.

⚠ WARNING

This equipment has a large capacitive leakage current during operation, which can cause enclosure parts to be above ground potential. Proper grounding, as described in this manual, is required. Failure to observe this precaution could result in death or severe injury.

⚠ WARNING

Before applying power to this drive, make sure that the front and cable covers are closed and fastened to prevent exposure to potential electrical fault conditions. Failure to observe this precaution could result in death or severe injury.

⚠ WARNING

An upstream disconnect/protective device must be provided as required by the National Electric Code® (NEC®). Failure to follow this precaution may result in death or severe injury.

⚠ WARNING

This drive can cause a DC current in the protective earthing conductor. Where a residual current-operated protective (RCD) or monitoring (RCM) device is used for protection in case of direct or indirect contact, only an RCD or RCM of Type B is allowed on the supply side of this product.

⚠ WARNING

Carry out wiring work only after the drive has been correctly mounted and secured.

⚠ WARNING

Before opening the drive covers:

- **Disconnect all power to the drive, including external control power that may be present.**
- **Wait a minimum of five minutes after all the lights on the keypad are off. This allows time for the DC bus capacitors to discharge.**

Failure to follow these precautions may cause death or severe injury.

⚠ WARNING

The opening of the branch-circuit protective device may be an indication that a fault current has been interrupted. To reduce the risk of fire or electric shock, current-carrying parts and other components of the controller should be examined and replaced if damaged. If burnout of the current element of an overload relay occurs, the complete overload relay must be replaced.

⚠ WARNING

Operation of this equipment requires detailed installation and operation instructions provided in the Installation/Operation manual intended for use with this product. It should be retained with this device at all times. A hard copy of this information may be ordered from literature fulfillment.

⚠ WARNING

Before servicing the drive:

- **Disconnect all power to the drive, including external control power that may be present.**
- **Place a "DO NOT TURN ON" label on the disconnect device Lock the disconnect device in the open position.**

Failure to follow these instructions will result in death or serious injury.

⚠ WARNING

The drive outputs (U, V, W) must not be connected to the input voltage or the utility line power as severe damage to the device may occur and there may be a risk of fire.

⚠ WARNING

The heat sink and/or outer enclosure may reach a high temperature.

Pay attention to hazard warnings!

Hot Surface—Risk of Burn. DO NOT TOUCH!

⚠ WARNING

In a domestic environment, this product may cause radio interference, in which case supplementary mitigation measures may be required.

Chapter 1—PowerXL DM1 Series overview

This chapter describes the purpose and contents of this manual, the receiving inspection recommendations and the PowerXL DM1 Series open drive catalog numbering system, and accessories available for the PowerXL DM1 Series.

Figure 1. Rating label.

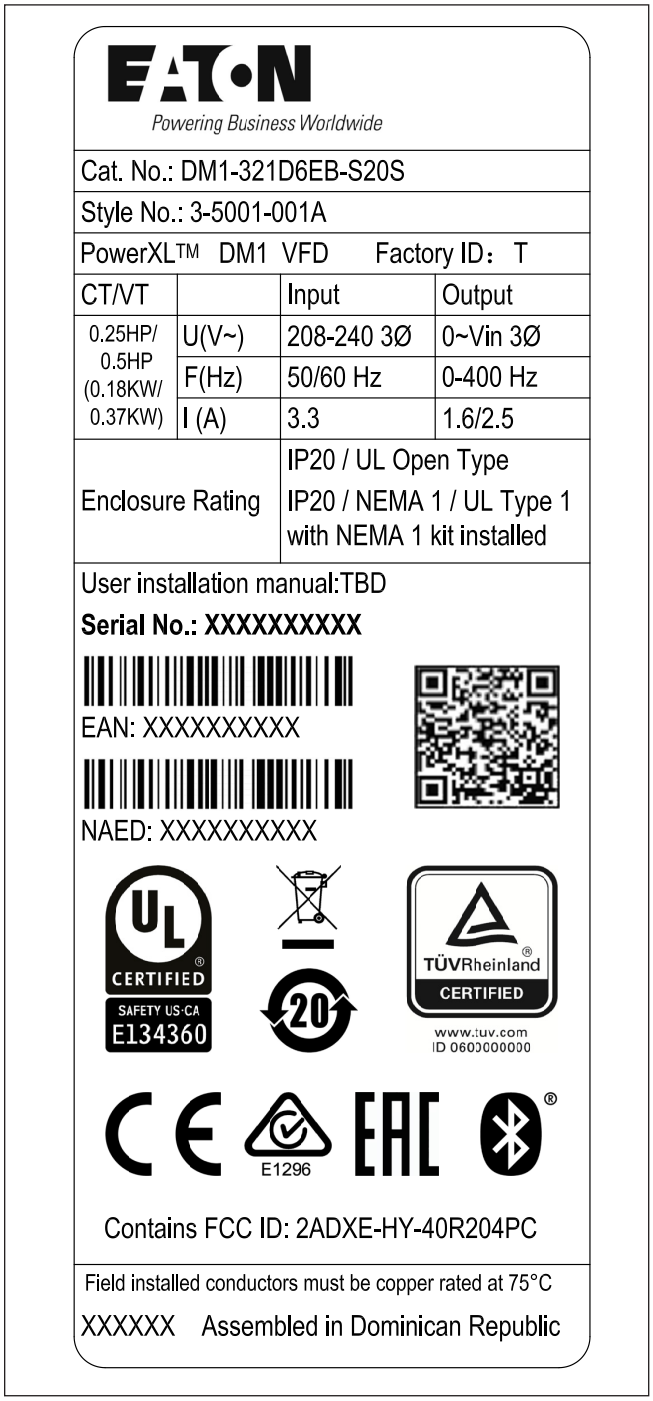

Table 1. Common abbreviations.

Abbreviation	Definition
CT	Constant torque with high overload rating (150%)
VT	Variable torque with low overload rating (110%)
I_H	High overload current (150%)
I_L	Low overload current (110%)
VFD	Variable Frequency Drive

Catalog number system

Figure 2 is for illustrative purposes only, please select a part number from the table below.

Figure 2. Catalog numbering system.

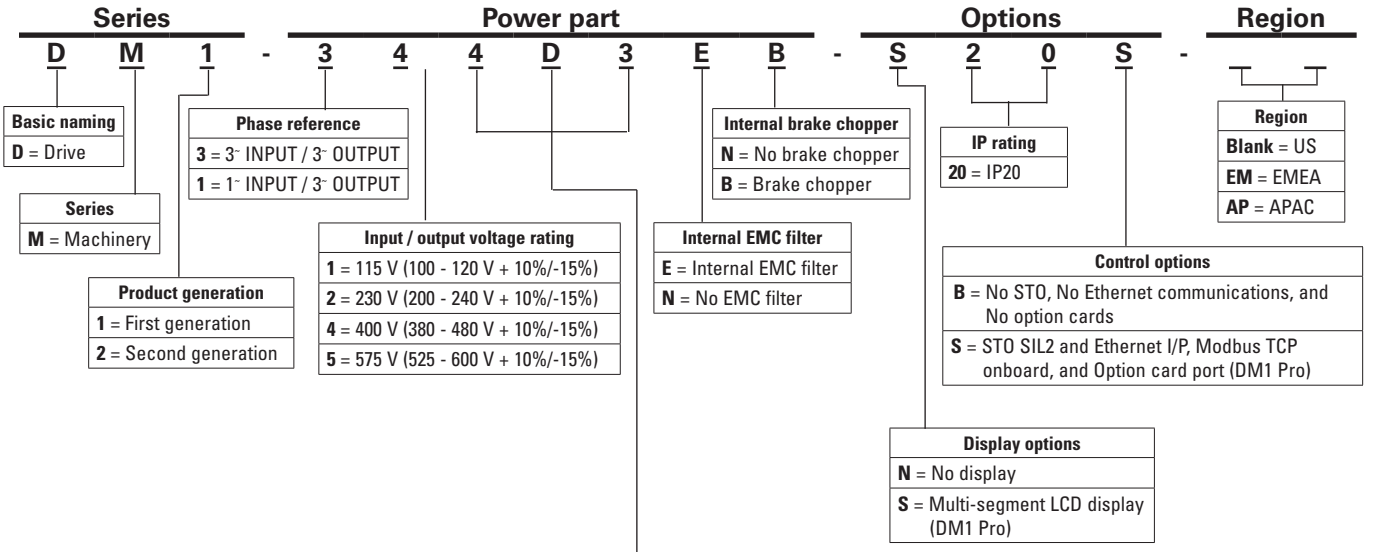

Output current rating (single phase)		Output current rating (three phase)		
100 - 120 v	200 - 240 v	200 - 240 v	380 - 480 v	525 - 600 v
1D6 = 1.6 A, 0.18 kW, 0.25 hp	1D6 = 1.6 A, 0.18 kW, 0.25 hp	1D6 = 1.6 A, 0.18 kW, 0.25 hp	1D5 = 1.5 A, 0.37 kW, 0.50 hp	4D5 = 4.5 A, 2.20 kW, 3.00 hp
3D0 = 3.0 A, 0.37 kW, 0.50 hp	3D0 = 3.0 A, 0.37 kW, 0.50 hp	3D0 = 3.0 A, 0.37 kW, 0.50 hp	2D2 = 2.2 A, 0.75 kW, 1.00 hp	7D5 = 7.5 A, 3.00 kW, 5.00 hp
4D8 = 4.8 A, 0.75 kW, 1.00 hp	4D8 = 4.8 A, 0.75 kW, 1.00 hp	4D8 = 4.8 A, 0.75 kW, 1.00 hp	4D3 = 4.3 A, 1.50 kW, 2.00 hp	010 = 10.0 A, 5.50 kW, 7.50 hp
6D9 = 6.9 A, 1.10 kW, 1.50 hp	7D8 = 7.8 A, 1.50 kW, 2.00 hp	7D8 = 7.8 A, 1.50 kW, 2.00 hp	5D6 = 5.6 A, 2.20 kW, 3.00 hp	013 = 13.5 A, 7.50 kW, 10.00 hp
	011 = 11.0 A, 2.20 kW, 3.00 hp	011 = 11.0 A, 2.20 kW, 3.00 hp	7D6 = 7.6 A, 3.00 kW, 5.00 hp	018 = 18.0 A, 11.00 kW, 15.00 hp
	017 = 17.5 A, 4.00 kW, 5.00 hp	017 = 17.5 A, 4.00 kW, 5.00 hp	012 = 12.0 A, 5.50 kW, 7.50 hp	022 = 22.0 A, 15.00 kW, 20.00 hp
		025 = 25.3 A, 5.50 kW, 7.50 hp	016 = 16.0 A, 7.50 kW, 10.00 hp	
		032 = 32.2 A, 7.50 kW, 10.00 hp	023 = 23.0 A, 11.00 kW, 15.00 hp	
		048 = 48.3 A, 11.00 kW, 15.00 hp	031 = 31.0 A, 15.00 kW, 20.00 hp	
			038 = 38.0 A, 18.50 kW, 25.00 hp	

Shading legend

FR1	FR2	FR3	FR4

DM1 option cards list:

1) DXM-NET-PROFIBUS : DM1 PROFIBUS communications card
2) DXM-NET-CANOPEN : DM1 CANOPEN communication card
3) DXG-NET-SWD-IP20 DM1/DG1: Smartwire communication card and module IP20
4) DXG-NET-SWD-IP54 DM1/DG1 : Smartwire communication card and module IP54

Power ratings and product selection

Table 2. PowerXL DM1 Series drives 230 V 3-phase input.

	Constant torque (CT)/high overload (I_H)			Variable torque (VT)/low overload (I_L)				
Frame size	**230 V, 50 Hz kW rating**	**230 V, 60 Hz hp**	**Current A**	**230 V, 50 Hz kW rating**	**230 V, 60 Hz hp**	**Current A**	**No EMC Catalog number**	**With EMC Catalog number**
FR1	0.18	0.25	1.6	0.37	0.5	2.5	**DM1-321D6NB-N20B**	**DM1-321D6EB-N20B**
	0.37	0.5	3	0.75	1	4.8	**DM1-323D0NB-N20B**	**DM1-323D0EB-N20B**
	0.75	1	4.8	1.5	2	7.8	**DM1-324D8NB-N20B**	**DM1-324D8EB-N20B**
	1.5	2	7.8	2.2	3	11	**DM1-327D8NB-N20B**	**DM1-327D8EB-N20B**
FR2	2.2	3	11	4	5	17.5	**DM1-32011NB-N20B**	**DM1-32011EB-N20B**
	4	5	17.5	5.5	7.5	25.3	**DM1-32017NB-N20B**	**DM1-32017EB-N20B**
FR3	5.5	7.5	25.3	7.5	10	32.2	**DM1-32025NB-N20B**	**DM1-32025EB-N20B**
FR4	7.5	10	32.2	11	15	48.3	**DM1-32032NB-N20B**	**DM1-32032EB-N20B**
	11	15	48.3	15	20	62.1	**DM1-32048NB-N20B**	**DM1-32048EB-N20B**

Table 3. PowerXL DM1 Series drives 480 V 3-phase input.

	Constant torque (CT)/high overload (I_H)			Variable torque (VT)/low overload (I_L)				
Frame size	**480 V, 50 Hz kW rating**	**480 V, 60 Hz hp**	**Current A**	**480 V, 50 Hz kW rating**	**480 V, 60 Hz hp**	**Current A**	**No EMC Catalog number**	**With EMC Catalog number**
FR1	0.37	0.5	1.5	0.75	1	2.2	**DM1-341D5NB-N20B**	**DM1-341D5EB-N20B**
	0.75	1	2.2	1.5	2	4.3	**DM1-342D2NB-N20B**	**DM1-342D2EB-N20B**
	1.5	2	4.3	2.2	3	5.6	**DM1-344D3NB-N20B**	**DM1-344D3EB-N20B**
	2.2	3	5.6	3	5	7.6	**DM1-345D6NB-N20B**	**DM1-345D6EB-N20B**
FR2	3	5	7.6	5.5	7.5	12	**DM1-347D6NB-N20B**	**DM1-347D6EB-N20B**
	5.5	7.5	12	7.5	10	16	**DM1-34012NB-N20B**	**DM1-34012EB-N20B**
	7.5	10	16	11	15	23	**DM1-34016NB-N20B**	**DM1-34016EB-N20B**
FR3	11	15	23	15	20	31	**DM1-34023NB-N20B**	**DM1-34023EB-N20B**
FR4	15	20	31	18.5	25	38	**DM1-34031NB-N20B**	**DM1-34031EB-N20B**
	18.5	25	38	22	30	46	**DM1-34038NB-N20B**	**DM1-34038EB-N20B**

Table 4. PowerXL DM1 PRO Series drives 115 V single phase input.

	Constant torque (CT)/high overload (I_H)			Variable torque (VT)/low overload (I_L)				
Frame size	**230 V, 50 Hz kW rating**	**230 V, 60 Hz hp**	**Current A**	**230 V, 50 Hz kW rating**	**230 V, 60 Hz hp**	**Current A**	**No EMC Catalog number**	**With EMC Catalog number**
FR1	0.18	0.25	1.6	0.37	0.5	2.5	**DM1-111D6NB-S20S**	**DM1-111D6EB-S20S**
	0.37	0.5	3	0.75	1	4.8	**DM1-113D0NB-S20S**	**DM1-113D0EB-S20S**
FR2	0.75	1	4.8	1.1	1.5	6.9	**DM1-114D8NB-S20S**	**DM1-114D8EB-S20S**
	1.1	1.5	6.9	1.5	2	7.8	**DM1-116D9NB-S20S**	**DM1-116D9EB-S20S**

Table 5. PowerXL DM1 PRO Series drives 230 V single phase input.

	Constant torque (CT)/high overload (I_H)			Variable torque (VT)/low overload (I_L)				
Frame size	230 V, 50 Hz kW rating	230 V, 60 Hz hp	Current A	230 V, 50 Hz kW rating	230 V, 60 Hz hp	Current A	No EMC Catalog number	With EMC Catalog number
FR1	0.18	0.25	1.6	0.37	0.5	2.5	**DM1-121D6NB-S20S**	**DM1-121D6EB-S20S**
	0.37	0.5	3	0.75	1	4.8	**DM1-123D0NB-S20S**	**DM1-123D0EB-S20S**
	0.75	1	4.8	1.5	2	7.8	**DM1-124D8NB-S20S**	**DM1-124D8EB-S20S**
FR2	1.5	2	7.8	2.2	3	11	**DM1-127D8NB-S20S**	**DM1-127D8EB-S20S**
	2.2	3	11	4	5	17.5	**DM1-12011NB-S20S**	**DM1-12011EB-S20S**
FR3	4	5	17.5	5.5	7.5	25.3	**DM1-12017NB-S20S**	**DM1-12017EB-S20S**

Table 6. PowerXL DM1 PRO Series drives 230 V 3-phase input.

	Constant torque (CT)/high overload (I_H)			Variable torque (VT)/low overload (I_L)				
Frame size	230 V, 50 Hz kW rating	230 V, 60 Hz hp	Current A	230 V, 50 Hz kW rating	230 V, 60 Hz hp	Current A	No EMC Catalog number	With EMC Catalog number
FR1	0.18	0.25	1.6	0.37	0.5	2.5	**DM1-321D6NB-S20S**	**DM1-321D6EB-S20S**
	0.37	0.5	3	0.75	1	4.8	**DM1-323D0NB-S20S**	**DM1-323D0EB-S20S**
	0.75	1	4.8	1.5	2	7.8	**DM1-324D8NB-S20S**	**DM1-324D8EB-S20S**
	1.5	2	7.8	2.2	3	11	**DM1-327D8NB-S20S**	**DM1-327D8EB-S20S**
FR2	2.2	3	11	4	5	17.5	**DM1-32011NB-S20S**	**DM1-32011EB-S20S**
	4	5	17.5	5.5	7.5	25.3	**DM1-32017NB-S20S**	**DM1-32017EB-S20S**
FR3	5.5	7.5	25.3	7.5	10	32.2	**DM1-32025NB-S20S**	**DM1-32025EB-S20S**
FR4	7.5	10	32.2	11	15	48.3	**DM1-32032NB-S20S**	**DM1-32032EB-S20S**
	11	15	48.3	15	20	62.1	**DM1-32048NB-S20S**	**DM1-32048EB-S20S**

Table 7. PowerXL DM1 PRO Series drives 480 V 3-phase input.

	Constant torque (CT)/high overload (I_H)			Variable torque (VT)/low overload (I_L)				
Frame size	480 V, 50 Hz kW rating	480 V, 60 Hz hp	Current A	480 V, 50 Hz kW rating	480 V, 60 Hz hp	Current A	No EMC Catalog number	With EMC Catalog number
FR1	0.37	0.5	1.5	0.75	1	2.2	**DM1-341D5NB-S20S**	**DM1-341D5EB-S20S**
	0.75	1	2.2	1.5	2	4.3	**DM1-342D2NB-S20S**	**DM1-342D2EB-S20S**
	1.5	2	4.3	2.2	3	5.6	**DM1-344D3NB-S20S**	**DM1-344D3EB-S20S**
	2.2	3	5.6	3	5	7.6	**DM1-345D6NB-S20S**	**DM1-345D6EB-S20S**
FR2	3	5	7.6	5.5	7.5	12	**DM1-347D6NB-S20S**	**DM1-347D6EB-S20S**
	5.5	7.5	12	7.5	10	16	**DM1-34012NB-S20S**	**DM1-34012EB-S20S**
	7.5	10	16	11	15	23	**DM1-34016NB-S20S**	**DM1-34016EB-S20S**
FR3	11	15	23	15	20	31	**DM1-34023NB-S20S**	**DM1-34023EB-S20S**
FR4	15	20	31	18.5	25	38	**DM1-34031NB-S20S**	**DM1-34031EB-S20S**
	18.5	25	38	22	30	46	**DM1-34038NB-S20S**	**DM1-34038EB-S20S**

Table 8. PowerXL DM1 PRO Series drives 575 V 3-phase input.

	Constant torque (CT)/high overload (I_H)			Variable torque (VT)/low overload (I_L)			
Frame size	**575 V, 50 Hz kW rating**	**575 V, 60 Hz hp**	**Current A**	**575 V, 50 Hz kW rating**	**575 V, 60 Hz hp**	**Current A**	**No EMC Catalog number**
FR2	2.2	3	4.5	3	5	7.5	**DM1-354D5NB-S20S**
	3	5	7.5	5.5	7.5	10	**DM1-357D5NB-S20S**
	5.5	7.5	10	7.5	10	13.5	**DM1-35010NB-S20S**
FR3	7.5	10	13.5	11	15	18	**DM1-35013NB-S20S**
FR4	11	15	18	15	20	22	**DM1-35018NB-S20S**
	15	20	22	18.5	25	27	**DM1-35022NB-S20S**

Accessories

Table 9. PowerXL Series - DM1 NEMA 1 conversion kits.

Description	Catalog number
DM1 FR1 NEMA 1 kit	**DXM-ACC-FR1N1KIT**
DM1 FR2 NEMA 1 kit	**DXM-ACC-FR2N1KIT**
DM1 FR3 NEMA 1 kit	**DXM-ACC-FR3N1KIT**
DM1 FR4 NEMA 1 kit	**DXM-ACC-FR4N1KIT**
DXM-ACC-FR1N1KIT-PLENUM	**DM1 FR1 Plenum Rated NEMA 1 Kit**
DXM-ACC-FR2N1KIT-PLENUM	**DM1 FR2 Plenum Rated NEMA 1 Kit**
DXM-ACC-FR3N1KIT-PLENUM	**DM1 FR3 Plenum Rated NEMA 1 Kit**
DXM-ACC-FR4N1KIT-PLENUM	**DM1 FR4 Plenum Rated NEMA 1 Kit**

Table 10. PowerXL Series - DM1 communication card kits.

Description	Catalog number
DG1/DM1 smartwire communication card and module IP20	**DXG-NET-SWD-IP20**
DG1/DM1 smartwire communication card and module IP54	**DXG-NET-SWD-IP54**
DM1 profibus communications card	**DXM-NET-PROFIBUS**
DM1 canopen communications card	**DXM-NET-CANOPEN**

Table 11. PowerXL Series - DM1 remote keypad kits.

Description	Catalog number
Remote keypad	**DXG-KEY-LCD**
Remote keypad mounting holder	**DXG-KEY-HOLDER**
DG1/DM1 remote keypad kit (3.0 m cable)	**DXG-KEY-RMTKIT**
DG1/DM1 remote keypad mounting holder only bulk pack (99)	**DXG-KEY-HOLDER-BP**

Table 12. PowerXL Series - DM1 demo units.

Description	Catalog number
Demo case DM1 PRO	**DM1-DEMO**

Table 13. PowerXpert in-control software.

Description	Catalog number
PC cable	**DXG-CBL-PCCABLE**

Service and warranty

In the unlikely event that you have a problem with your PowerXL frequency inverter, please contact your local sales office.

When you call, have the following information ready:

- the exact frequency inverter part no. (see nameplate) Filter in the switching cabinet doors (see manufacturer specifications);
- the date of purchase; and
- a detailed description of the problem that has occurred.

If some of the information printed on the nameplate is not legible, please state only the information that is clearly legible. This information can also be found on the cover of the control terminals.

Information concerning the guarantee can be found in the General Terms and Conditions of Sale.

Chapter 2—Receiving and inspection

The PowerXL DM1 VFD has met a stringent series of factory quality requirements before shipment. It is possible that packaging or equipment damage may have occurred during shipment. After receiving your PowerXL Series VFD, please check for the following:

- Inspect the unit to ensure it was not damaged during shipment.
- Make sure that the part number indicated on the nameplate corresponds with the catalog number on your order.
- If shipping damage has occurred, please contact and file a claim with the carrier involved immediately.
- If the delivery does not correspond to your order, please contact your representative.

The magnetic cores and cable ties are only included in EMI version drive.

Unpacking

Lift the drive out from the carton and remove the packaging.

Figure 3. Unpacking FR1, FR2, FR3, and FR4.

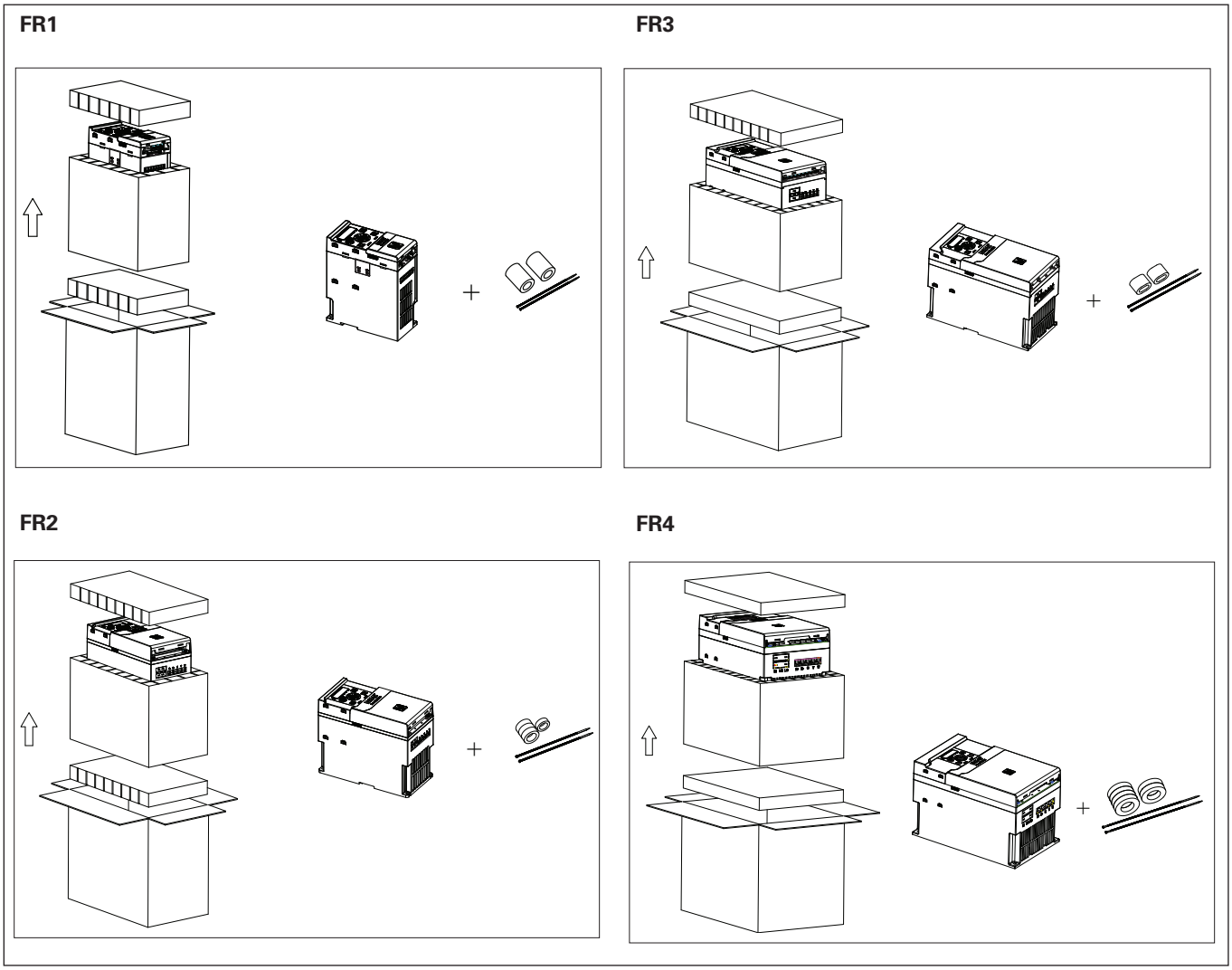

Proper use

The PowerXL frequency inverters are electrical apparatus for controlling variable speed drives with 3-phase motors. They are designed for installation in machines or for use in combination with other components within a machine or system.

After installation in a machine, the frequency inverters must not be taken into operation until the associated machine has been confirmed to comply with the safety requirements of Machinery Safety Directive (MSD) 2006/42 EC (meets the requirements of EN 60204). The user of the equipment is responsible for ensuring that the machine use complies with the relevant EU Directives.

The CE markings on the PowerXL frequency inverter confirm that, when used in a typical drive configuration, the apparatus complies with the European Low Voltage Directive (LVD) and the EMC Directives (Directive 2014/35/EU and Directive 2014/30/EU).

In the described system configurations, PowerXL frequency inverters are suitable for use in public and non-public networks.

Note: If use in public networks, please contact Eaton for further information.

A connection to IT networks (networks without reference to earth potential) is permissible only to a limited extent, because the device's built-in filter capacitors connect the network with the earth potential (enclosure). On earth free networks, this can lead to dangerous situations or damage to the device (isolation monitoring required).

To the output of the frequency inverter (terminals U, V, W) you must not:

- connect a voltage or capacitive loads (for example, phase compensation capacitors);
- connect multiple frequency inverters in parallel; or
- make a direct connection to the input (bypass).

Observe the technical data and connection requirements. For additional information, refer to the equipment nameplate or label at the frequency inverter, and the documentation.

Any other usage constitutes improper use.

Maintenance and inspection

PowerXL frequency inverters are maintenance free. However, external influences may affect the function and the lifespan of the PowerXL frequency inverter. We therefore recommend that the devices are checked regularly and the following maintenance measures are carried out at the specified intervals.

If the PowerXL frequency inverter is damaged by external influences, contact Technical Service.

Table 14. Maintenance measures and intervals.

Maintenance measure	Maintenance interval
Clean cooling vents (cooling slits)	If required
Check the fan function	6–24 months (depending on the environment)
Filter in the switching cabinet doors (see manufacturer specifications)	6–24 months (depending on the environment)
Check the tightening torques of the terminals (control signal terminals, power terminals)	Regularly
Check connection terminals and all metallic surfaces for corrosion	6–24 months (depending on the environment)

Storage

If the frequency inverter is stored before use, suitable ambient conditions must be ensured at the site of storage:

- Storage temperature: –40°F to 158°F (–40°C to 70°C);
- Relative average air humidity: <95%, noncondensing, non-corrosive; and
- To prevent damage to the DC link capacitors, storage times longer than 12 months are not recommended.

Charging the internal DC link capacitors

After extended storage times or extended downtimes during which no power is supplied (>12 months), the capacitors in the internal DC link must be recharged in a controlled manner in order to prevent damage. To do this, the PowerXL variable frequency drive must be supplied with power, with a controlled DC power supply unit, via two mains DC bus connection terminals. Please consult the factory for detailed instructions.

Chapter 3—Engineering considerations

Introduction

This chapter describes the most important features in the energy circuit of a drive system that you should take into consideration in your project planning.

Electrical power network

Input connection and configuration

The PowerXL Series frequency inverters can be connected and operated with all control-point grounded AC power networks (see IEC 60364 for more information).

Figure 4. AC power networks with grounded neutral point (TN-/TT networks).

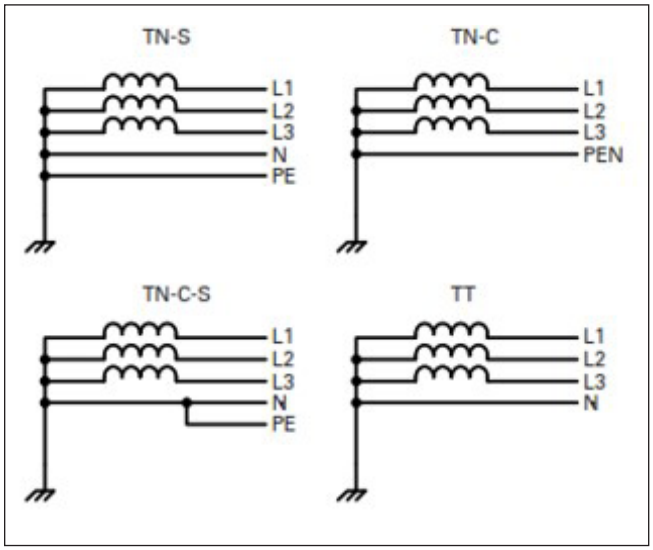

The frequency inverter can be applied to all types of power networks above. If multiple frequency inverters with single-phase supplies are to be connected, a symmetrical distribution to the three external conductors shall be taken into account. In addition, the total current of all single-phase consumers is not to cause an overload of the neutral conductor (N-conductor).

The connection and operation of frequency inverters to asymmetrically grounded TN networks (phase-grounded delta network "Grounded Delta", USA) or neutral point ungrounded or high-resistance grounded (>30 ohms) IT networks is only conditionally permissible. In these networks above-mentioned, the internal interference suppression filter of frequency inverter must be disconnected (unscrew the screw marked 'EMC', see "Installation in corner-grounded network and IT System" on page 45). Then the required filtering for EMC (electromagnetic compatibility) is no longer present (degrade to level C4).

Measures for EMC are mandatory in a drive system in order to meet the legal requirements for EMC and low voltage regulations.

Good grounding measures are a prerequisite for the effective insert of further measures such as shielding of filters. Without respective grounding measures, further steps are superfluous.

Input voltage and frequency

The standardized input voltages (IEC 60038, VDE017-1) for energy suppliers (EVU) guarantee the following conditions at the transition points:

- Deviation from the rated value of voltage: Max. +10%/-15%;
- Deviation in voltage phase balance: Max. ±3%;
- Deviation from rated value of the frequency: Max. +/-5 Hz.

The board tolerance band of the PowerXL Series frequency inverter considers the rated value for:

European as (EU: ULN = 230 V/400 V, 50 Hz);

American as (USA: ULN = 240 V/480 V, 60 Hz); and

Canada as (CAN: ULN = 600 V, 60 Hz) standard voltages:

- make a direct connection to the input (bypass).

Observe the technical data and connection requirements. For additional information, refer to the equipment nameplate or label at the frequency inverter, and the documentation.

Any other usage constitutes improper use.

Input contactor

The input contactor enables an operational switching on and off the supply voltage for the frequency inverter and switching off in case of a fault.

The input contactor is designed based on the input current (ILN) of the frequency inverter and the utilization category AC-1 (IEC 60947).

While planning the project, make sure that inching operation is not done via the input contactor of the frequency inverter on frequency-controlled drives, but through a controller input of the frequency inverter.

The maximum permitted operating frequency of the input voltage with the PowerXL frequency inverter is one time per minute (normal operation).

Total harmonic distortion (THD)

Non-linear consumers (loads) in an AC supply system produce harmonic voltages that again result in harmonic currents. These harmonic currents at the inductive and capacitive reactance's of a mains supply system produce additional voltage drops with different values that are then overlaid on the sinusoidal mains voltage and result in distortions. In supply systems, this form of "noise" can give rise to problems in an installation if the sum of the harmonics exceeds certain limit values.

Non-linear consumers (harmonics producers) include for example:

- Induction and arc furnaces, welding devices;
- Current converters, rectifiers and inverters, soft starters, variable frequency drives;
- Switched-mode power supply units (computers, monitors, lighting), uninterrupted power supply (UPS); and
- The THD value (THD = Total Harmonic Distortion) is defined in standard IEC/EN 61800-3 as the ratio of the rms value of all harmonic components to the rms value of the fundamental frequency. It is given in percent of the total value.

$$\text{THD} \quad \frac{\sqrt{U_2^2 + U_3^2 + U_4^2 + \cdots U_n^2}}{U_1} \times 100\%$$

U_1 — *fundamental component*

U_n — n^{th} *order harmonic component*

The THD value of the harmonic distortion is stated in relation to the rms value of the total signal as a percentage. On a variable frequency drive, the total harmonic distortion is greater than 100%.

To assist in the calculation of system harmonics, a Harmonic Estimation Calculator Tool is available at www.eaton.com/drives.

Reactive power compensation devices

Special compensation measures on the power supply side is not required for PowerXL Series drives, which take on very little reactive power of the fundamental harmonics from the AC power supply network (cosØ ~0.98).

In the AC power networks with non-choked reactive current compensation devices, current deviations can enable parallel resonance and undefinable circumstances.

In the project planning for the connection of frequency inverters to AC power networks with undefined circumstances, please consider using AC chokes.

Installation in corner-grounded network and IT system

Corner grounded and IT system are allowed for all the drive types.

In these circumstances the EMC protection class must be changed to level C4. This is done by removing the built-in EMC/MOV screws with a simple procedure described as follows.

Remove the main cover of the AC drive and remove the EMC/MOV screws depending on frame size (see **Figure 5–Figure 6**). Once the screw is removed, it can be reconnected to re-engage the EMC protection.

Figure 5. Location of the EMC/MOV screw in frame 1.

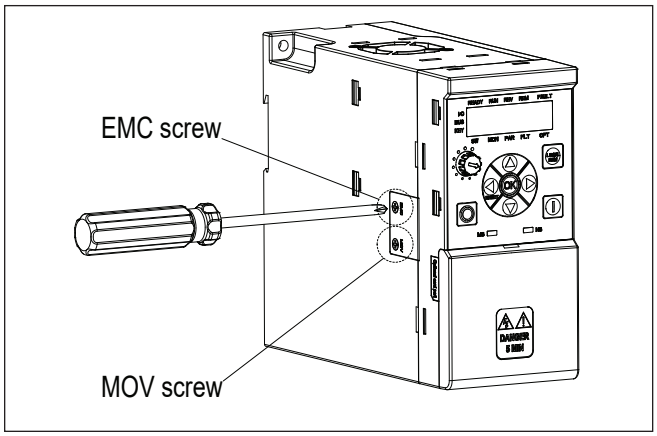

Figure 6. Location of the EMC/MOV screws in frames 2-4.

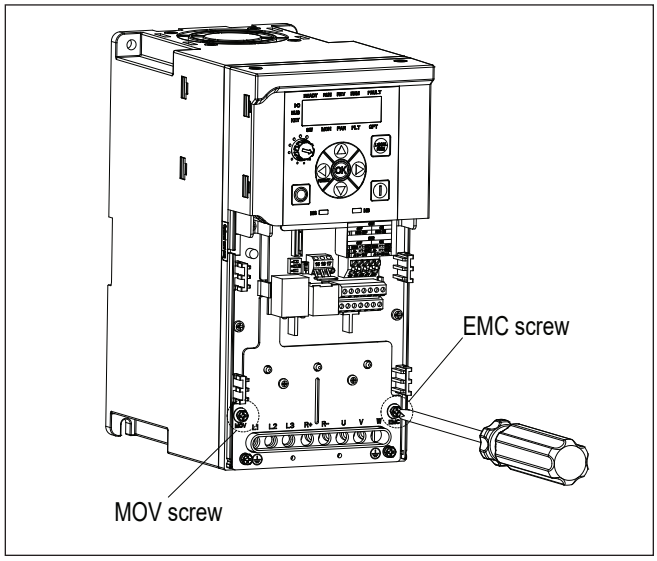

Chapter 4—Mechanical installation

Note: All following information is strongly recommended but is not necessary if sufficient system design and validation has been completed.

This chapter contains all of the information required to properly install and prepare the PowerXL Series VFD for operation. The contents are listed to serve as a list of tasks needed to complete the installation. Included in this section are:

- Installation environment;
- Standard mounting position and clearance;
- Option card installation;
- NEMA 1 kit installation; and
- Remote mount keypad kit installation.

Electrical installation warnings and cautions

WARNING

Carry out wiring work only after the frequency inverter has been correctly mounted and secured.

WARNING

Electric shock hazard—risk of injuries!

Carry out wiring work only if the unit is de-energized.

CAUTION

Debounced inputs may not be used in the safety circuit diagram.

Fire hazard!

Only use cables, protective switches, and contactors that feature the indicated permissible nominal current value.

CAUTION

Debounced inputs may not be used in the safety circuit diagram.

According to product standard IEC/EN 61800-5-1, an additional equipment grounding (PE) conductor of the same cross-sectional area as the original protective earthing conductor must be connected, or the cross-section of the equipment grounding conductor must be at least 10 mm^2 Cu.

WARNING

The components in the drive's power section remain energized after the supply voltage has been switched off. After disconnecting the supply, wait at least five minutes before removing the cover to allow the intermediate circuit capacitors to discharge.

Pay attention to hazard warnings!

Standard mounting instructions

- Select the mounting location based on requirements listed in this chapter.
- Mounting surface must be a flat, non flammable surface. Mounting orientation can be vertical, horizontal or inclined (refer to mounting orientation illustration **Figure 7**).

  DIN rail mounting is only applicable for vertical mounting, while screw mounting is applicable for vertical mounting, horizontal mounting and inclined mounting.
- PowerXL Series open drives may be mounted side-by-side or stacked vertically, as outlined in this chapter.
- Surface must be strong enough to support the drive and not subject to excessive motion or vibration.
- Mark the location of the mounting holes on the mounting surface.
- Using fasteners appropriate to your VFD and mounting surface, securely attach the VFD to the mounting surface using all mounting hole locations.

When mounting one unit above the other, the lower unit air outlet must be directed away from the inlet air used by the upper one. The clearance between the upper and lower unit should equal C + D. See illustrations above **Table 16.**

Mounting dimensions

Refer to Appendix C for drive dimensions.

Figure 7. Mounting orientation.

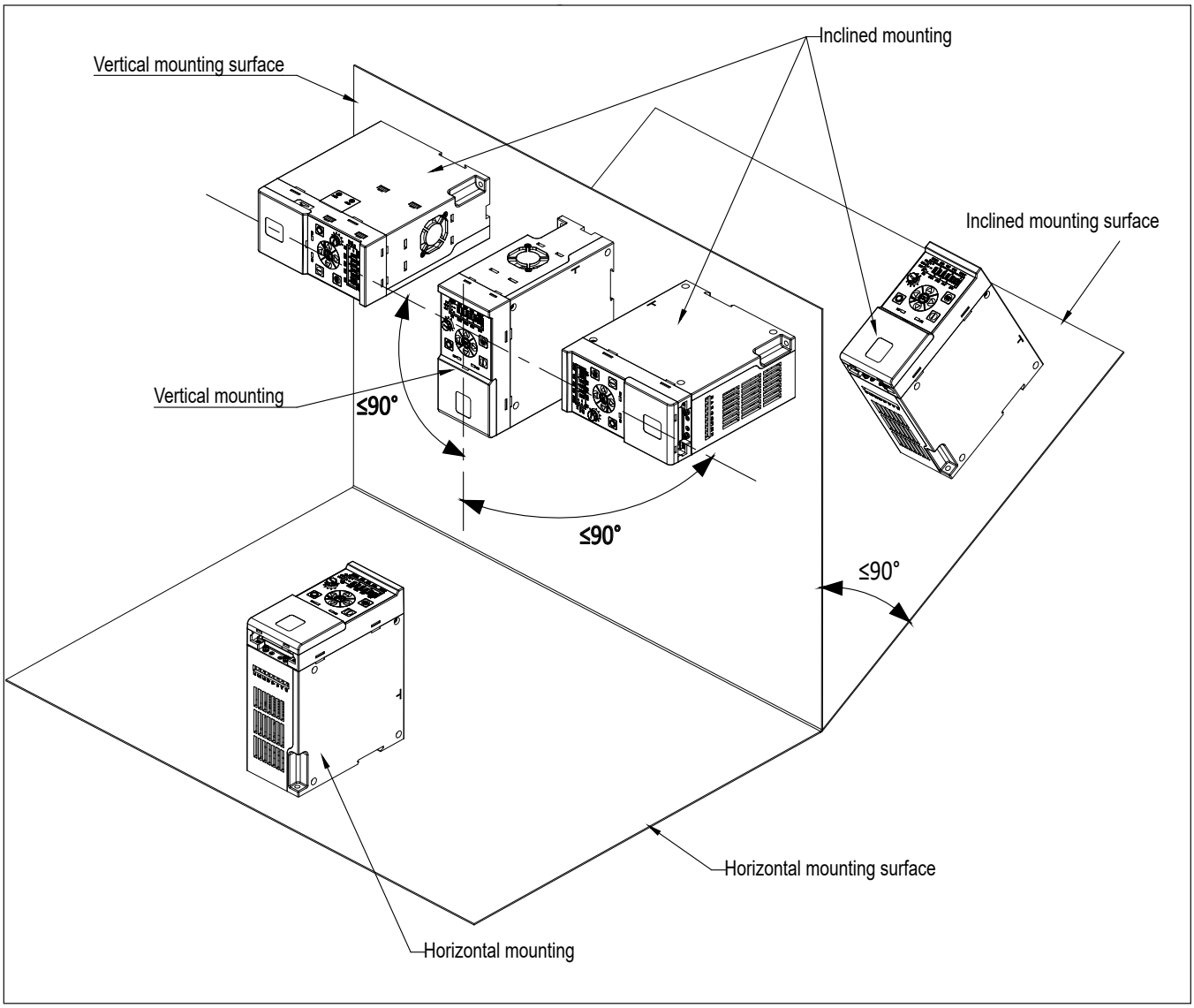

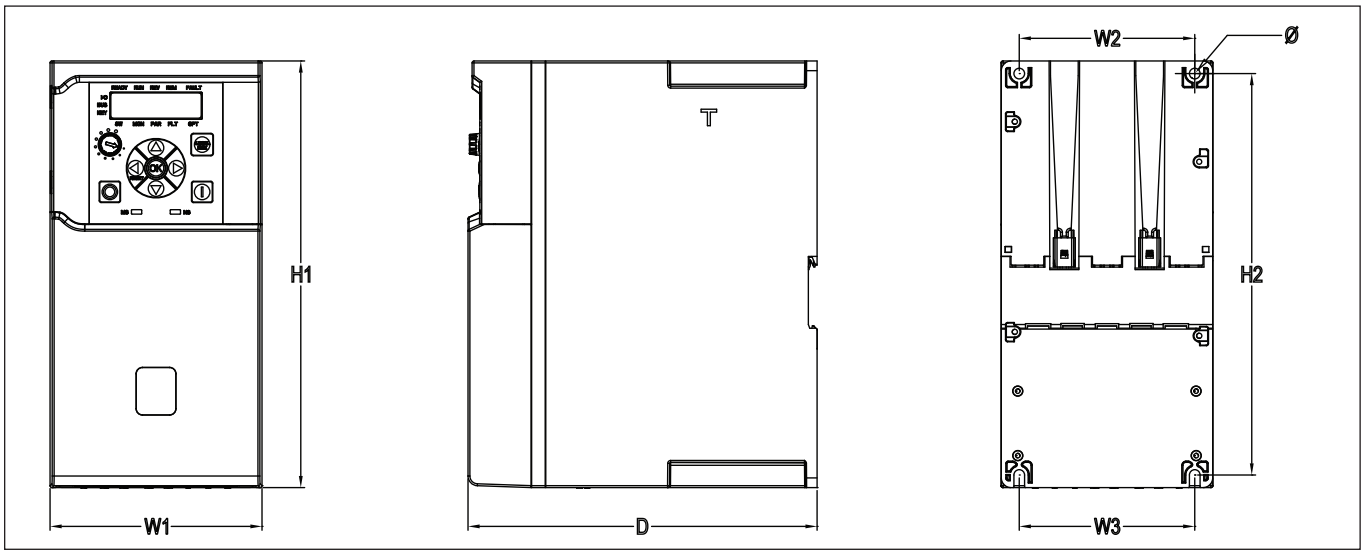

Table 15. Approximate mounting dimensions in inches (mm).

			Output rating		Dimensions							Weight
Input voltage	**Frame size**	**Drive catalog number**	**CT/IH current amps**	**VT/IL current amps**	**D in. (mm)**	**H1 in. (mm)**	**H2 in. (mm)**	**W1 in. (mm)**	**W2 in. (mm)**	**W3 in. (mm)**	**Φ in. (mm)**	**lb (kg)**
100 Vac to 120 Vac 50/60 Hz 1-phase	FR1	DM1-111D6	1.6	2.5	7.09 (180)	5.98 (152)	5.51 (140)	2.83 (72)	2.26 (57.5)	2.26 (57.5)	0.20 (5.2)	2.6 (1.2)
		DM1-113D0	3	4.8	7.09 (180)	5.98 (152)	5.51 (140)	2.83 (72)	2.26 (57.5)	2.26 (57.5)	0.20 (5.2)	2.6 (1.2)
	FR2	DM1-114D8	4.8	6.9	7.09 (180)	8.66 (220)	8.15 (207)	4.29 (109)	3.56 (90.5)	3.56 (90.5)	0.22 (5.5)	5.7 (2.6)
		DM1-116D9	6.9	7.8	7.09 (180)	8.66 (220)	8.15 (207)	4.29 (109)	3.56 (90.5)	3.56 (90.5)	0.22 (5.5)	5.7 (2.6)
200 Vac to 240 Vac 50/60 Hz 1-phase	FR1	DM1-121D6	1.6	2.5	7.09 (180)	5.98 (152)	5.51 (140)	2.83 (72)	2.26 (57.5)	2.26 (57.5)	0.20 (5.2)	2.6 (1.2)
		DM1-123D0	3	4.8	7.09 (180)	5.98 (152)	5.51 (140)	2.83 (72)	2.26 (57.5)	2.26 (57.5)	0.20 (5.2)	2.6 (1.2)
		DM1-124D8	4.8	7.8	7.09 (180)	5.98 (152)	5.51 (140)	2.83 (72)	2.26 (57.5)	2.26 (57.5)	0.20 (5.2)	2.6 (1.2)
	FR2	DM1-127D8	7.8	11	7.09 (180)	8.66 (220)	8.15 (207)	4.29 (109)	3.56 (90.5)	3.56 (90.5)	0.22 (5.5)	5.7 (2.6)
		DM1-12011	11	17.5	7.09 (180)	8.66 (220)	8.15 (207)	4.29 (109)	3.56 (90.5)	3.56 (90.5)	0.22 (5.5)	5.7 (2.6)
	FR3	DM1-12017	17.5	25.3	7.09 (180)	10.24 (260)	9.72 (247)	5.12 (130)	4.57 (116)	4.57 (116)	0.22 (5.5)	8.2 (3.7)
200 Vac to 240 Vac 50/60 Hz 3-phase	FR1	DM1-321D6	1.6	2.5	7.09 (180)	5.98 (152)	5.51 (140)	2.83 (72)	2.26 (57.5)	2.26 (57.5)	0.20 (5.2)	2.6 (1.2)
		DM1-323D0	3	4.8	7.09 (180)	5.98 (152)	5.51 (140)	2.83 (72)	2.26 (57.5)	2.26 (57.5)	0.20 (5.2)	2.6 (1.2)
		DM1-324D8	4.8	7.8	7.09 (180)	5.98 (152)	5.51 (140)	2.83 (72)	2.26 (57.5)	2.26 (57.5)	0.20 (5.2)	2.6 (1.2)
		DM1-327D8	7.8	11	7.09 (180)	5.98 (152)	5.51 (140)	2.83 (72)	2.26 (57.5)	2.26 (57.5)	0.20 (5.2)	2.6 (1.2)
	FR2	DM1-32011	11	17.5	7.09 (180)	8.66 (220)	8.15 (207)	4.29 (109)	3.56 (90.5)	3.56 (90.5)	0.22 (5.5)	5.7 (2.6)
		DM1-32017	17.5	25.3	7.09 (180)	8.66 (220)	8.15 (207)	4.29 (109)	3.56 (90.5)	3.56 (90.5)	0.22 (5.5)	5.7 (2.6)
	FR3	DM1-32025	25.3	32.2	7.09 (180)	10.24 (260)	9.72 (247)	5.12 (130)	4.57 (116)	4.57 (116)	0.22 (5.5)	8.2 (3.7)
	FR4	DM1-32032	32.2	48.3	7.68 (195)	11.81 (300)	11.06 (281)	7.24 (184)	6.3 (160)	6.3 (160)	0.24 (6)	13.9 (6.3)
		DM1-32048	48.3	62.1	7.68 (195)	11.81 (300)	11.06 (281)	7.24 (184)	6.3 (160)	6.3 (160)	0.24 (6)	13.9 (6.3)

Table 15. Approximate mounting dimensions in inches (continued).

			Output rating		Dimensions							Weight
Input voltage	**Frame size**	**Drive catalog number**	**CT/IH current amps**	**VT/IL current amps**	**D in. (mm)**	**H1 in. (mm)**	**H2 in. (mm)**	**W1 in. (mm)**	**W2 in. (mm)**	**W3 in. (mm)**	**Φ in. (mm)**	**lb (kg)**
380 Vac to 480 Vac 50/60 Hz 3-phase	FR1	DM1-341D5	1.5	2.2	7.09 (180)	5.98 (152)	5.51 (140)	2.83 (72)	2.26 (57.5)	2.26 (57.5)	0.20 (5.2)	2.6 (1.2)
		DM1-342D2	2.2	4.3	7.09 (180)	5.98 (152)	5.51 (140)	2.83 (72)	2.26 (57.5)	2.26 (57.5)	0.20 (5.2)	2.6 (1.2)
		DM1-344D3	4.3	5.6	7.09 (180)	5.98 (152)	5.51 (140)	2.83 (72)	2.26 (57.5)	2.26 (57.5)	0.20 (5.2)	2.6 (1.2)
		DM1-345D6	5.6	7.6	7.09 (180)	5.98 (152)	5.51 (140)	2.83 (72)	2.26 (57.5)	2.26 (57.5)	0.20 (5.2)	2.6 (1.2)
	FR2	DM1-347D6	7.6	12	7.09 (180)	8.66 (220)	8.15 (207)	4.29 (109)	3.56 (90.5)	3.56 (90.5)	0.22 (5.5)	5.7 (2.6)
		DM1-34012	12	16	7.09 (180)	8.66 (220)	8.15 (207)	4.29 (109)	3.56 (90.5)	3.56 (90.5)	0.22 (5.5)	5.7 (2.6)
		DM1-34016	16	23	7.09 (180)	8.66 (220)	8.15 (207)	4.29 (109)	3.56 (90.5)	3.56 (90.5)	0.22 (5.5)	5.7 (2.6)
	FR3	DM1-34023	23	31	7.09 (180)	10.24 (260)	9.72 (247)	5.12 (130)	4.57 (116)	4.57 (116)	0.22 (5.5)	8.2 (3.7)
	FR4	DM1-34031	31	38	7.68 (195)	11.81 (300)	11.06 (281)	7.24 (184)	6.3 (160)	6.3 (160)	0.24 (6)	13.9 (6.3)
		DM1-34038	38	46	7.68 (195)	11.81 (300)	11.06 (281)	7.24 (184)	6.3 (160)	6.3 (160)	0.24 (6)	13.9 (6.3)
525 Vac to 600 Vac 50/60 Hz 3-phase	FR2	DM1-354D5	4.5	7.5	7.09 (180)	8.66 (220)	8.15 (207)	4.29 (109)	3.56 (90.5)	3.56 (90.5)	0.22 (5.5)	5.7 (2.6)
		DM1-357D5	7.5	10	7.09 (180)	8.66 (220)	8.15 (207)	4.29 (109)	3.56 (90.5)	3.56 (90.5)	0.22 (5.5)	5.7 (2.6)
		DM1-35010	10	13.5	7.09 (180)	8.66 (220)	8.15 (207)	4.29 (109)	3.56 (90.5)	3.56 (90.5)	0.22 (5.5)	5.7 (2.6)
	FR3	DM1-35013	13.5	18	7.09 (180)	10.24 (260)	9.72 (247)	5.12 (130)	4.57 (116)	4.57 (116)	0.22 (5.5)	8.2 (3.7)
	FR4	DM1-35018	18	22	7.68 (195)	11.81 (300)	11.06 (281)	7.24 (184)	6.3 (160)	6.3 (160)	0.24 (6)	13.9 (6.3)
		DM1-35022	22	27	7.68 (195)	11.81 (300)	11.06 (281)	7.24 (184)	6.3 (160)	6.3 (160)	0.24 (6)	13.9 (6.3)

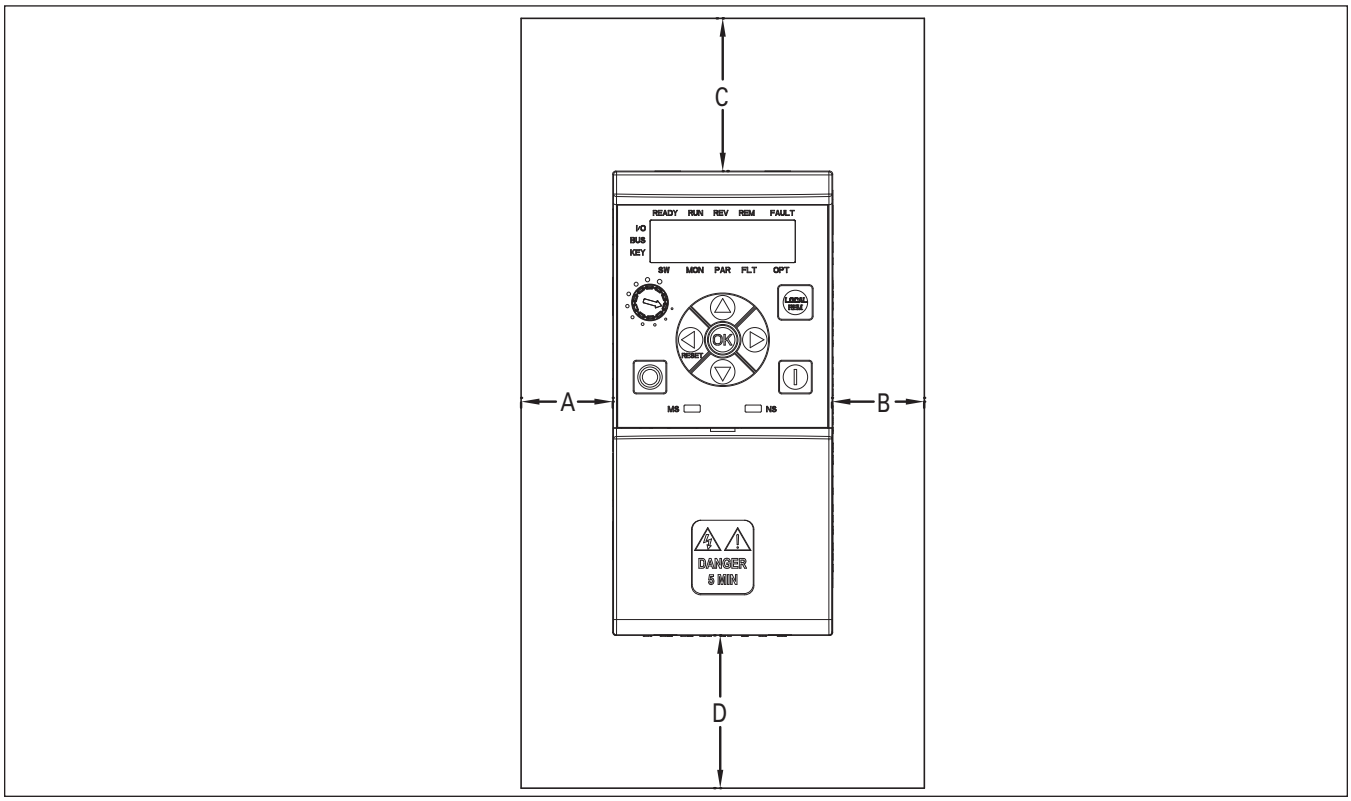

Table 16. Approximate space requirements in inches (mm).

			Output rating		Mounting clearance imperial				Airflow
Input voltage	**Frame size**	**Drive catalog number**	**CT/IH current amps**	**VT/IL current amps**	**A in. (mm)**	**B in. (mm)**	**C in. (mm)**	**D in. (mm)**	**CFM (m3/h)**
100 Vac to 120 Vac, 50/60 Hz 1-phase	FR1	DM1-111D6…	1.6	2.5	0	0	1.97 (50)	1.97 (50)	14.83 (25.2)
		DM1-113D0…	3	4.8	0	0	1.97 (50)	1.97 (50)	14.83 (25.2)
	FR2	DM1-114D8…	4.8	6.9	0	0	1.97 (50)	1.97 (50)	24.72 (42)
		DM1-116D9…	6.9	7.8	0	0	1.97 (50)	1.97 (50)	24.72 (42)
200 Vac to 240 Vac, 50/60 Hz 1-phase	FR1	DM1-121D6…	1.6	2.5	0	0	1.97 (50)	1.97 (50)	14.83 (25.2)
		DM1-123D0…	3	4.8	0	0	1.97 (50)	1.97 (50)	14.83 (25.2)
		DM1-124D8…	4.8	7.8	0	0	1.97 (50)	1.97 (50)	14.83 (25.2)
	FR2	DM1-127D8…	7.8	11	0	0	1.97 (50)	1.97 (50)	24.72 (42)
		DM1-12011…	11	17.5	0	0	1.97 (50)	1.97 (50)	24.72 (42)
	FR3	DM1-12017…	17.5	25.3	0	0	1.97 (50)	1.97 (50)	42.37 (72)
200 Vac to 240 Vac, 50/60 Hz 3-phase	FR1	DM1-321D6…	1.6	2.5	0	0	1.97 (50)	1.97 (50)	14.83 (25.2)
		DM1-323D0…	3	4.8	0	0	1.97 (50)	1.97 (50)	14.83 (25.2)
		DM1-324D8…	4.8	7.8	0	0	1.97 (50)	1.97 (50)	14.83 (25.2)
		DM1-327D8…	7.8	11	0	0	1.97 (50)	1.97 (50)	14.83 (25.2)
	FR2	DM1-32011…	11	17.5	0	0	1.97 (50)	1.97 (50)	24.72 (42)
		DM1-32017…	17.5	25.3	0	0	1.97 (50)	1.97 (50)	24.72 (42)
	FR3	DM1-32025…	25.3	32.2	0	0	1.97 (50)	1.97 (50)	42.37 (72)
	FR4	DM1-32032…	32.2	48.3	0	0	1.97 (50)	1.97 (50)	75.56 (128.4)
		DM1-32048…	48.3	62.1	0	0	1.97 (50)	1.97 (50)	75.56 (128.4)

Table 16. Approximate space requirements in inches (mm) (continued).

			Output rating		Mounting clearance imperial				Airflow
Input voltage	**Frame size**	**Drive catalog number**	**CT/IH current amps**	**VT/IL current amps**	**A in. (mm)**	**B in. (mm)**	**C in. (mm)**	**D in. (mm)**	**CFM (m3/h)**
380 Vac to 480 Vac, 50/60 Hz 3-phase	FR1	DM1-341D5…	1.5	2.2	0	0	1.97 (50)	1.97 (50)	14.83 (25.2)
		DM1-342D2…	2.2	4.3	0	0	1.97 (50)	1.97 (50)	14.83 (25.2)
		DM1-344D3…	4.3	5.6	0	0	1.97 (50)	1.97 (50)	14.83 (25.2)
		DM1-345D6…	5.6	7.6	0	0	1.97 (50)	1.97 (50)	14.83 (25.2)
	FR2	DM1-347D6…	7.6	12	0	0	1.97 (50)	1.97 (50)	37.43 (63.6)
		DM1-34012…	12	16	0	0	1.97 (50)	1.97 (50)	37.43 (63.6)
		DM1-34016…	16	23	0	0	1.97 (50)	1.97 (50)	37.43 (63.6)
	FR3	DM1-34023..	23	31	0	0	1.97 (50)	1.97 (50)	58.61 (99.6)
	FR4	DM1-34031…	31	38	0	0	1.97 (50)	1.97 (50)	57.56 (97.8)
		DM1-34038…	38	46	0	0	1.97 (50)	1.97 (50)	57.56 (97.8)
525 Vac to 600 Vac, 50/60 Hz 3-phase	FR2	DM1-354D5…	4.5	7.5	0	0	1.97 (50)	1.97 (50)	37.43 (63.6)
		DM1-357D5…	7.5	10	0	0	1.97 (50)	1.97 (50)	37.43 (63.6)
		DM1-35010…	10	13.5	0	0	1.97 (50)	1.97 (50)	37.43 (63.6)
	FR3	DM1-35013…	13.5	18	0	0	1.97 (50)	1.97 (50)	58.61 (99.6)
	FR4	DM1-35018…	18	22	0	0	1.97 (50)	1.97 (50)	57.56 (97.8)
		DM1-35022…	22	27	0	0	1.97 (50)	1.97 (50)	57.56 (97.8)

Note: The dimension for A in the table 2 will change if the option cards are used.

FR1 mounting instructions

Step 1.

Lift the drive out from the carton and remove the packaging. The magnetic cores and cable ties are only included in EMI version drive.

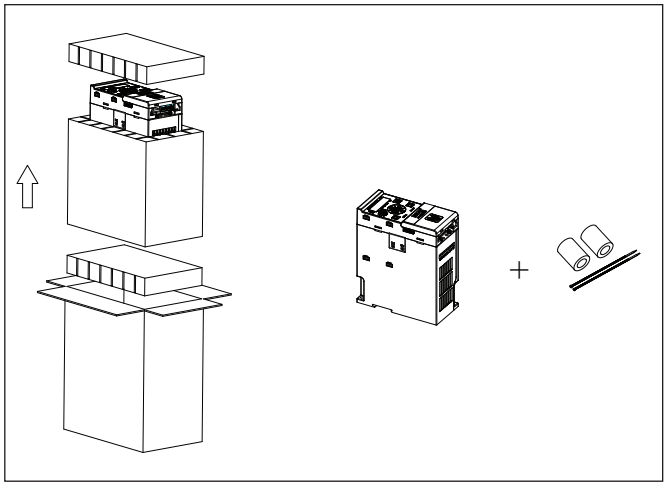

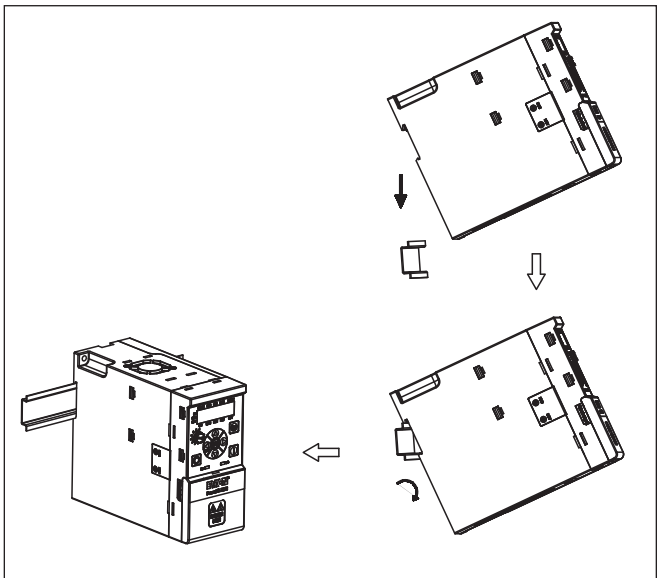

DIN Rail mounting

Step 2.

Screw mounting: Attach the drive to the mounting plate with two M5x20 (or 3/16 in.) screws and two M5 (or 3/16 in.) nuts. The opening dimension on the mounting plate should follow required dimension (refer to the dimension drawing in Table 1 of this document).

DIN Rail mounting: Lift the drive at an angle about 30 degrees. Align the top hooks of drive DIN rail mounting slot with DIN rail top edge. Push down and rotate the drive to clip the bottom hooks on the bottom DIN rail edge.

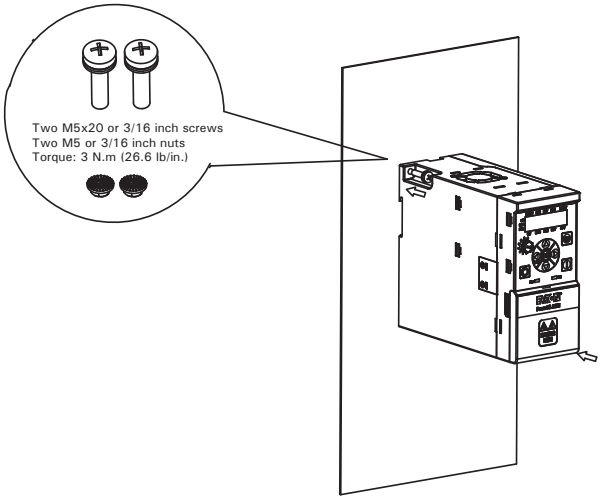

Screw mounting

Step 3. (EMI version only):

The input wires (including 3 line wires and 1 input grounding wire) should run through the input magnetic core before connecting to input terminal block and grounding hole. Use a cable tie to tie the input magnetic cores to the input wires. The output wires (only 3 motor wires) should run through the output magnetic core before connecting to output terminal block.

The output grounding wire should not run through the output magnetic core. Use a cable tie to tie the output magnetic cores to the output wires. The maximum distance between input / output magnetic cores top surface and drive bottom surface is 100 mm (3.94 in.). The input magnetic core and output magnetic core are the same for FR1.

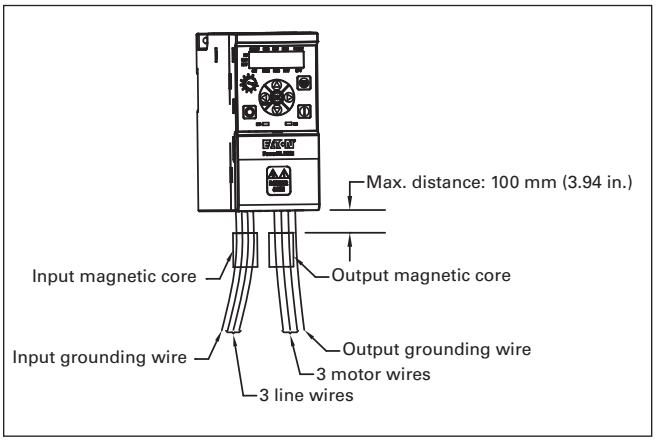

FR2 mounting instructions

Step 1.

Lift the drive out from the carton, remove the packaging. The magnetic cores and cable ties are only included in EMI version drive.

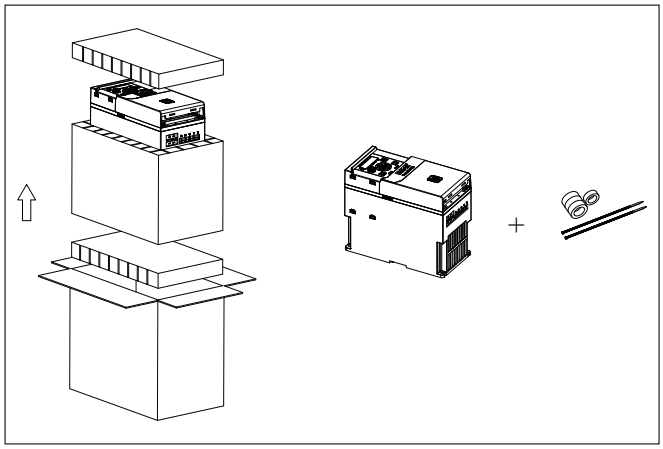

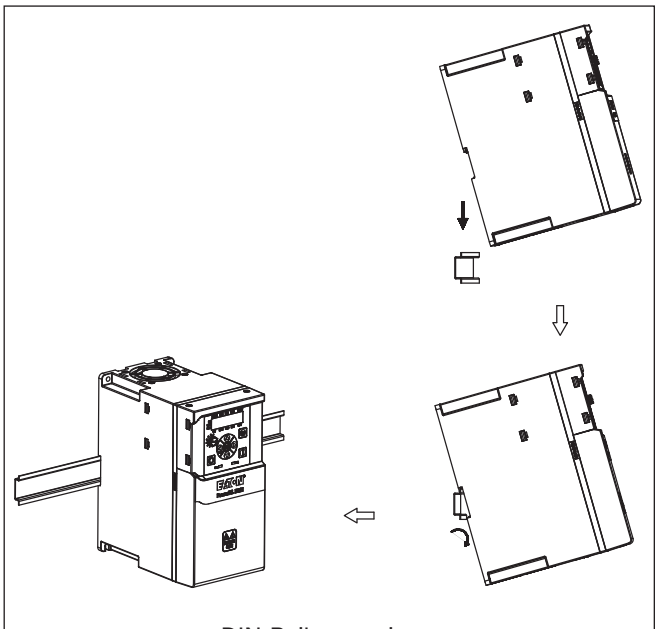

DIN Rail mounting

Step 2.

Screw mounting: Attach the drive to the mounting plate with four M5X20 (or 3/16 in.) screws and four M5 (or 3/16 in.) nuts. The opening dimension on the mounting plate should follow required dimension (refer to the dimension drawing in the instruction leaflet).

DIN rail mounting: Lift the drive at an angle about 30 degrees. Align the top hooks of drive DIN rail mounting slot with DIN rail top edge. Push down and rotate the drive to clip the bottom hooks on the bottom DIN rail edge.

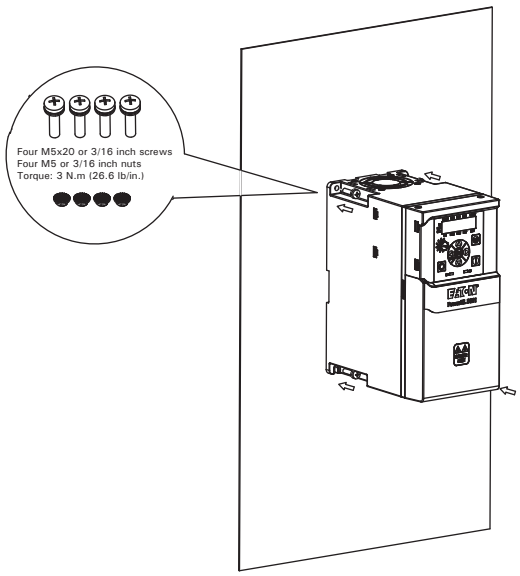

Screw mounting

Step 3. (EMI version only):

The input wires (including three line wires and one input grounding wire) should run through the input magnetic core before connecting to input terminal block and grounding hole. Use a cable tie to secure the input magnetic cores to the input wires.

The output wires (only three motor wires) should run through the output magnetic core before connecting to output terminal block. The output grounding wire should **not** run through the output magnetic core. Use a cable tie to secure the output magnetic cores to the output wires.

The max distance between input/output magnetic cores top surface and drive bottom surface is 100 mm (3.94 in.).

The height of the input magnetic core is bigger than output magnetic core for 3-phase FR2 EMI version, but they are the same for 1-phase FR2 EMI version.

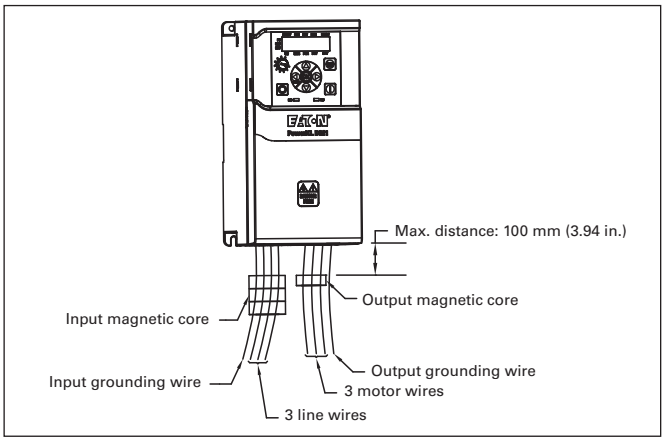

FR3 mounting instructions

Step 1.

Lift the drive out from the carton, remove the packaging. The magnetic cores and cable ties are only included in EMI version drive.

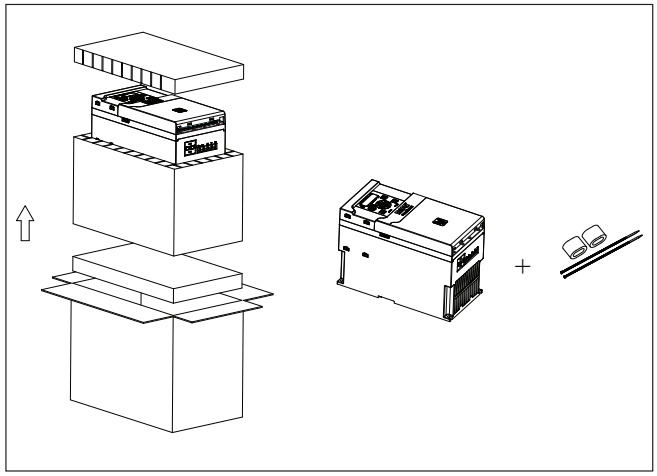

Step 2.

Screw mounting: Attach the drive to the mounting plate with four M5X20 (or 3/16 in.) screws and four M5 (or 3/16 in.) nuts. The opening dimension on the mounting plate should follow required dimension (refer to the dimension drawing in the instruction leaflet).

DIN Rail mounting: Lift the drive at an angle about 30 degrees. Align the top hooks of drive DIN rail mounting slot with DIN rail top edge. Push down and rotate the drive to clip the bottom hooks on the bottom DIN rail edge.

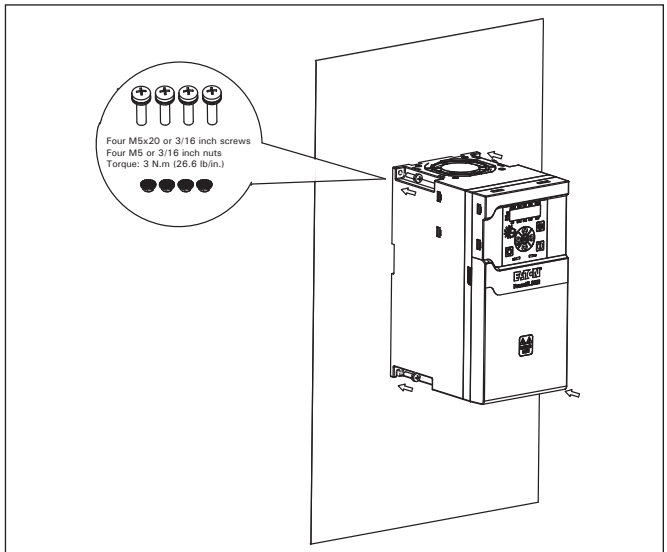

Screw mounting

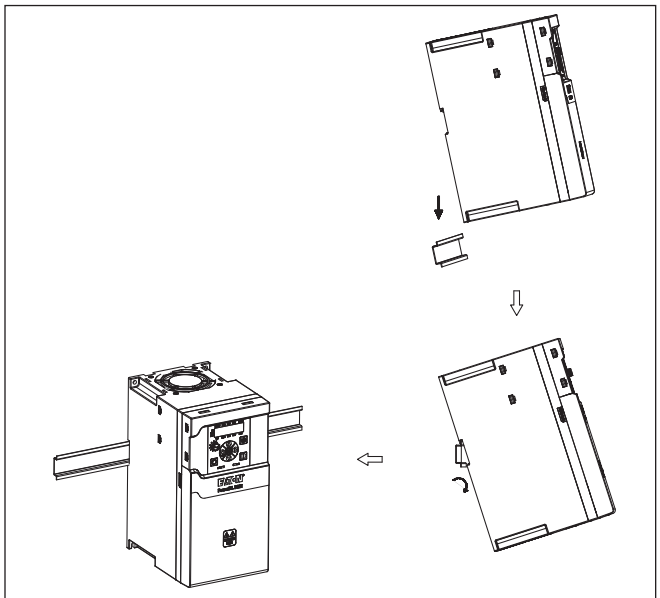

DIN Rail mounting

Step 3. (EMI version only):

The input wires (including three line wires and one input grounding wire) should run through the input magnetic core before connecting to the input terminal block and grounding hole. Use a cable tie to secure the input magnetic cores to the input wires.

For 3-phase FR3 EMI version, the output wires (only three motor wires) should run through the output magnetic core before connecting to output terminal block. The output grounding wire should **not** run through the output magnetic core. Use a cable tie to secure the output magnetic cores to the output wires.

For the 1-phase FR3 EMI version, there is no output magnetic core. The motor wires and output grounding wire can be connected to corresponding terminals directly.

The max distance between input/output magnetic cores top surface and drive bottom surface is 100 mm (3.94 in.). The input magnetic core and output magnetic core are the same for 3-phase FR3 EMI version.

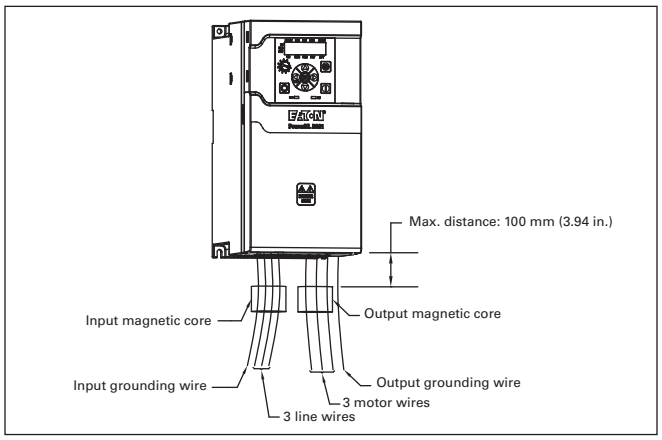

FR4 mounting instructions

Step 1.

Lift the drive out from the carton, remove the packaging. The magnetic cores and cable ties are only included in EMI version drive.

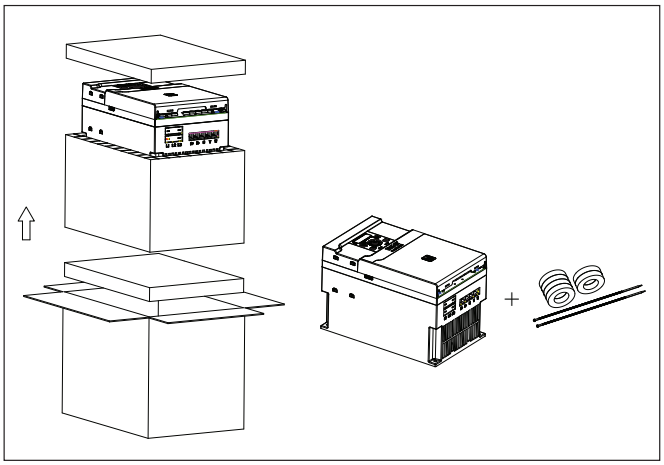

Step 2.

Screw mounting: Attach the drive to the mounting plate with four M5x20 (or 3/16 in.) screws and four M5 (or 3/16 in.) nuts. The opening dimension on the mounting plate should follow required dimension (refer to the dimension drawing in the instruction leaflet).

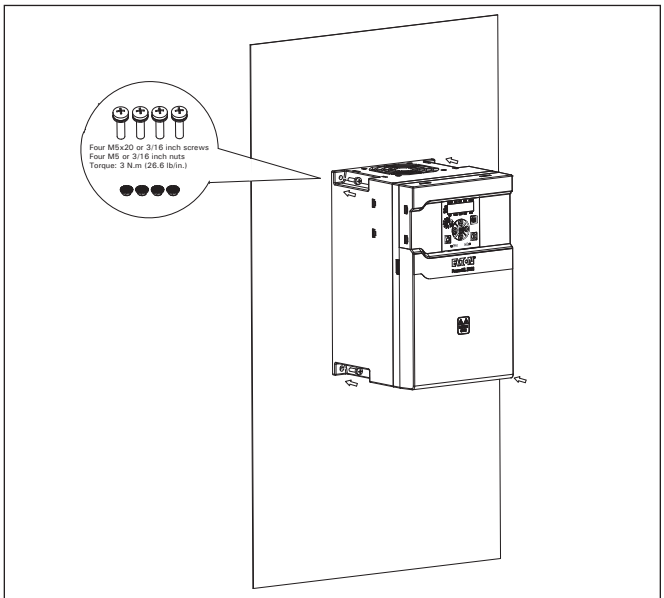

Screw mounting

Step 3. (EMI version only):

The input wires (including 3 line wires and 1 input grounding wire) should run through the input magnetic core before connecting to input terminal block and grounding hole. Use a cable tie to tie the input magnetic cores to the input wires. The output wires (only 3 motor wires) should run through the output magnetic core before connecting to output terminal block.

The output grounding wire should not run through the output magnetic core. Use a cable tie to tie the output magnetic cores to the output wires. The maximum distance between input/output magnetic cores top surface and drive bottom surface is 100 mm (3.94 in.). The height of input magnetic core is bigger than output magnetic core for FR4.

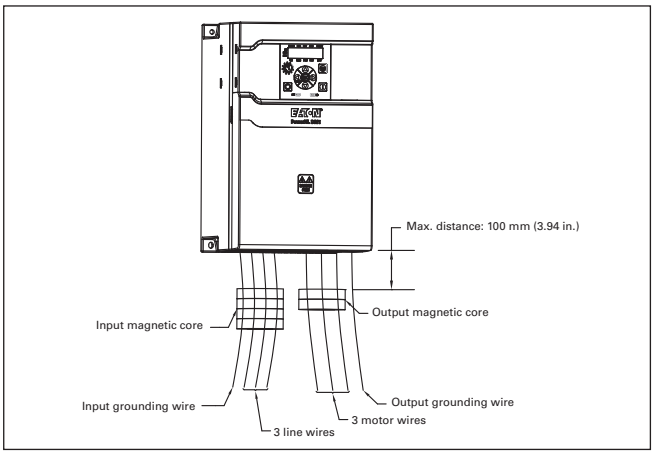

Mounting instruction for option cards

Step 1.

For enclosed type:

Remove the front cover (1) from NEMA 1 kit then remove the terminal cover (2) from drive.

For open type:

Only remove the terminal cover.

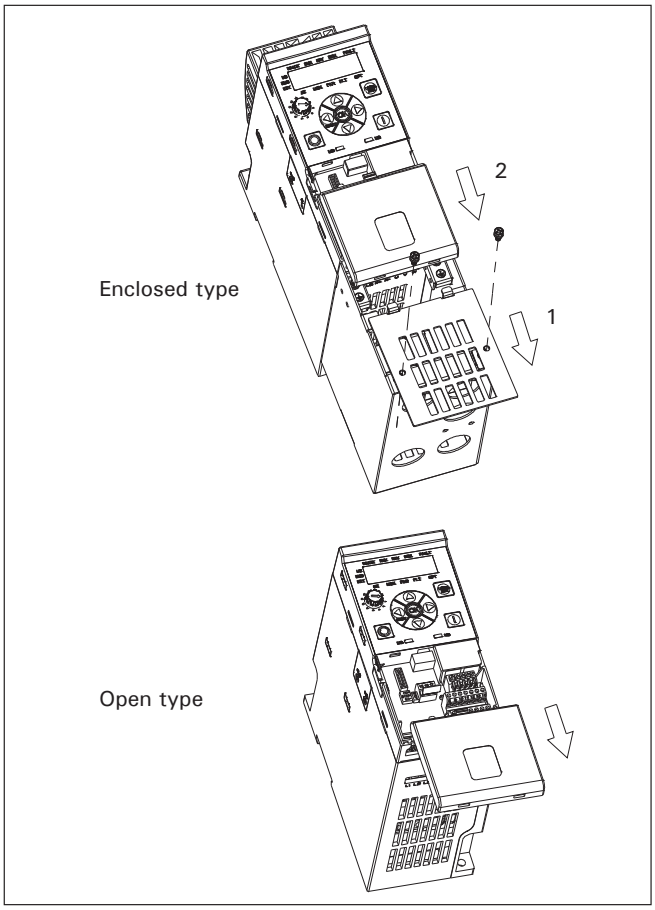

Step 2.

Remove the option card port label and four snap covers from the drive.

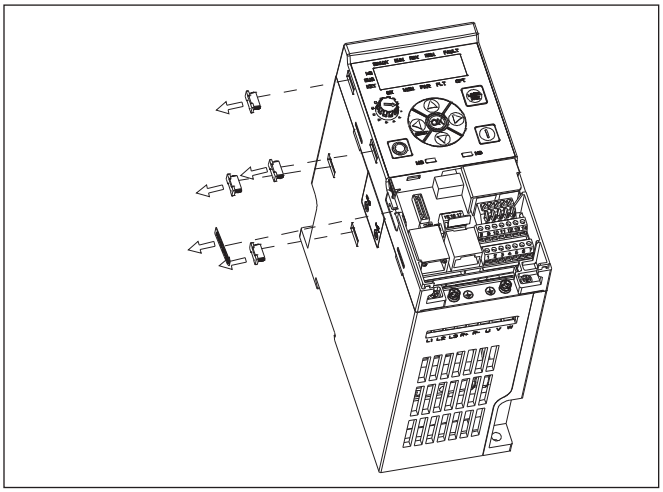

Step 3.

Connect the cable to option card connector (3) and MCU board connector (4).

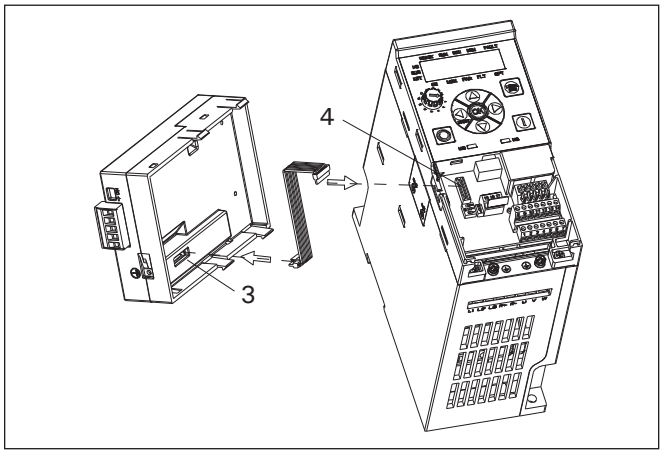

Step 4.

Clamp the cable with the optional card port. Mount the option card to the drive by inserting the four snaps into the slots on drive.

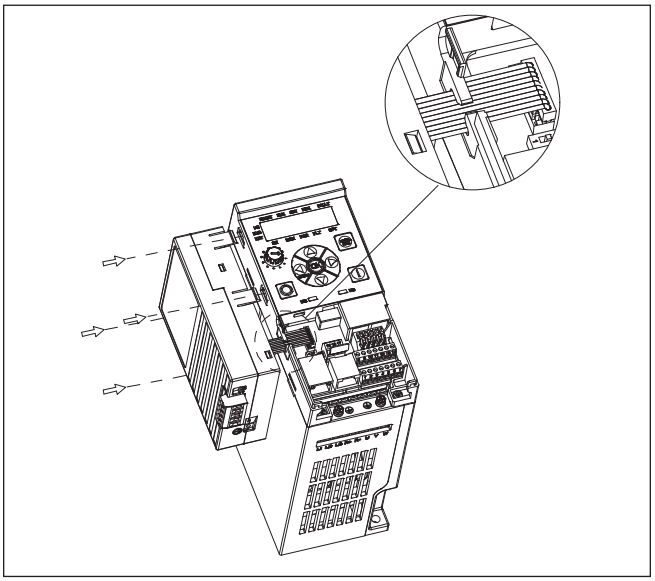

Step 5.

For enclosed type:

Install the terminal cover (1) to the drive then install the front cover (2) to NEMA 1 kit.

For open type:

Only install the terminal cover to the drive.

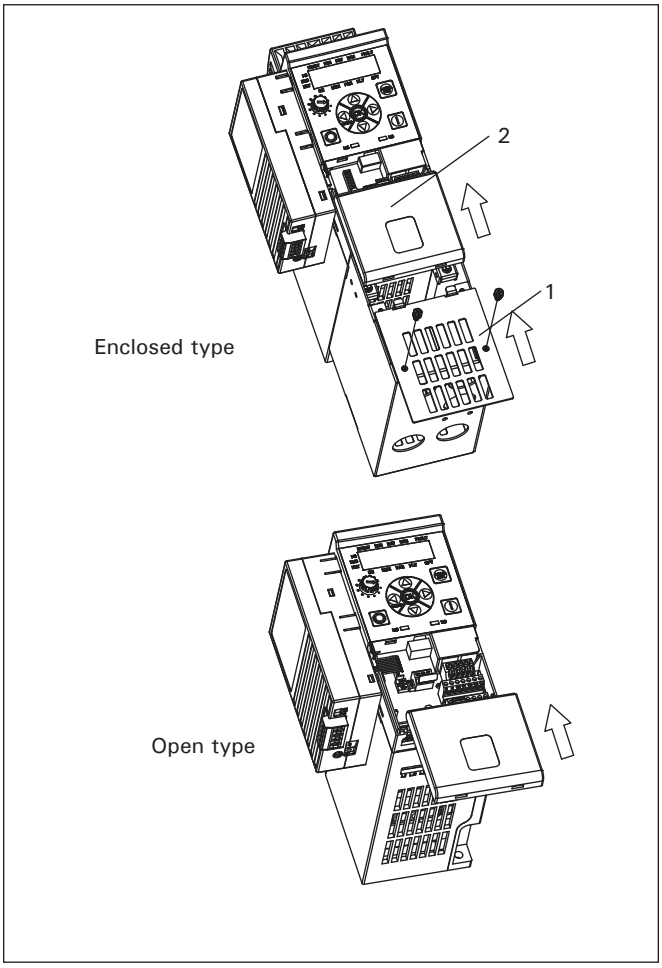

Wiring instruction.

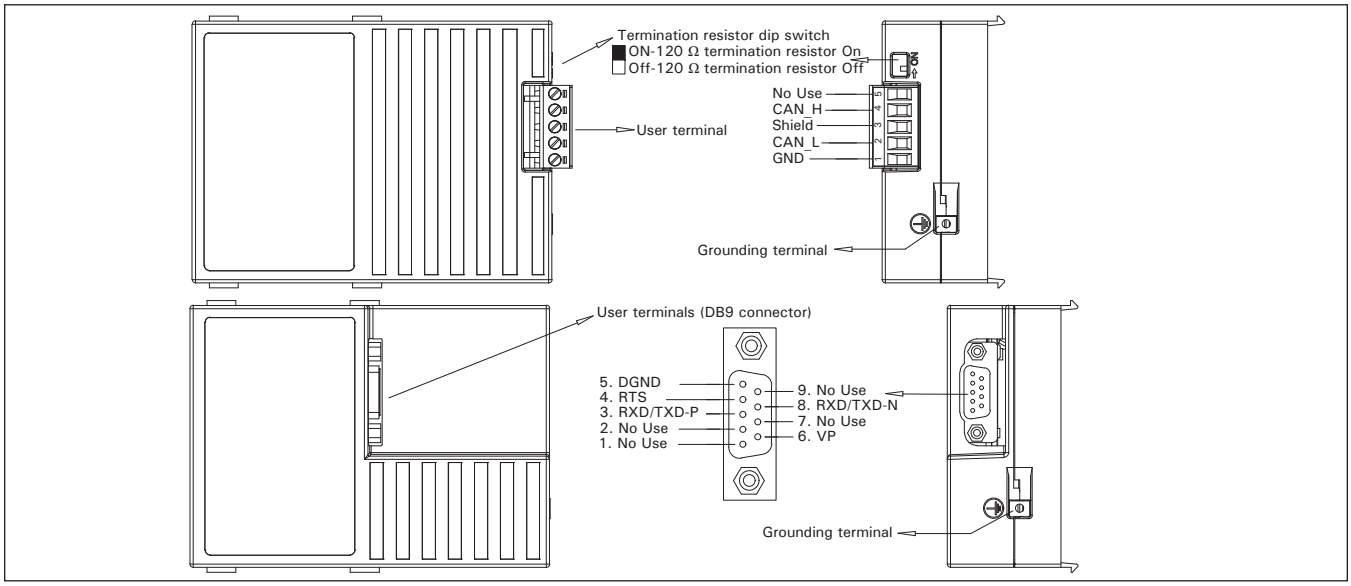

NEMA 1 kit

Component list for DM1 drive with NEMA 1 kit

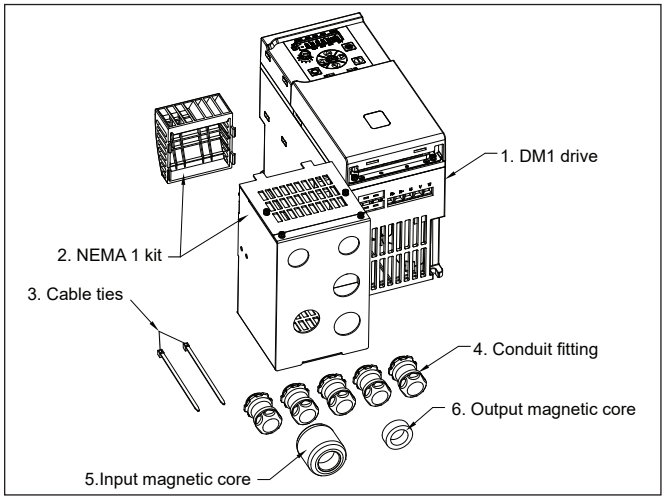

1. DM1 drive.
2. NEMA 1 kit (with fan cover).
3. Cable tie (2 pcs., shipped with drive for EMI version only).
4. Conduit fitting (supplied by customer).
5. Input magnetic core (shipped with drive for EMI version only).
6. Output magnetic core (shipped with drive for EMI version only).
7. Input/output/grounding cable etc.

Notes: 1. The NEMA 1 kits are only applicable for screw mounting, but not for DIN rail mounting.

2. The NEMA 1 kits are only applicable for vertical mounting, but not for horizontal mounting or inclined mounting.

Component list for DM1 NEMA 1 kit

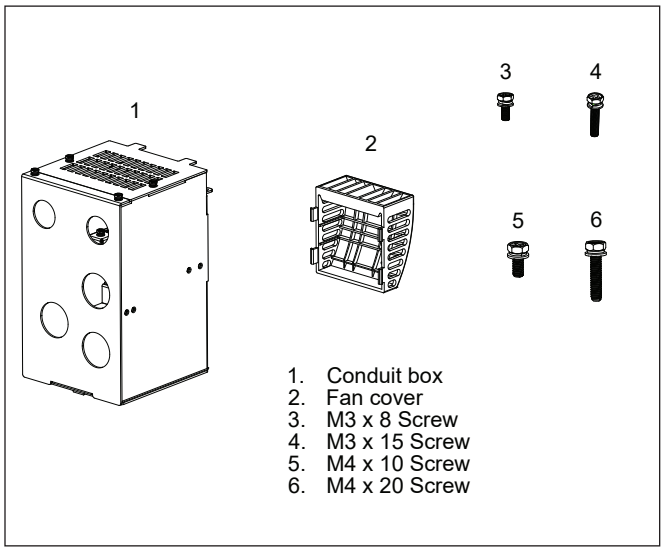

Table 17. Screw quantities.

	M3 x 8	M3 x 15	M4 x 10	M4 x 20
FR1	6	2		
FR2	6			2
FR3	4		2	2
FR4			6	2

Installation steps for DM1 FR1 NEMA 1 kit

Step 1

Insert the two hooks on thinner end of fan cover into the two slots on top surface of drive first (refer to detail A), then push the two hooks on thicker end of fan cover into the two slots on top surface of drive. The thicker end of the fan cover should face the front surface of drive.

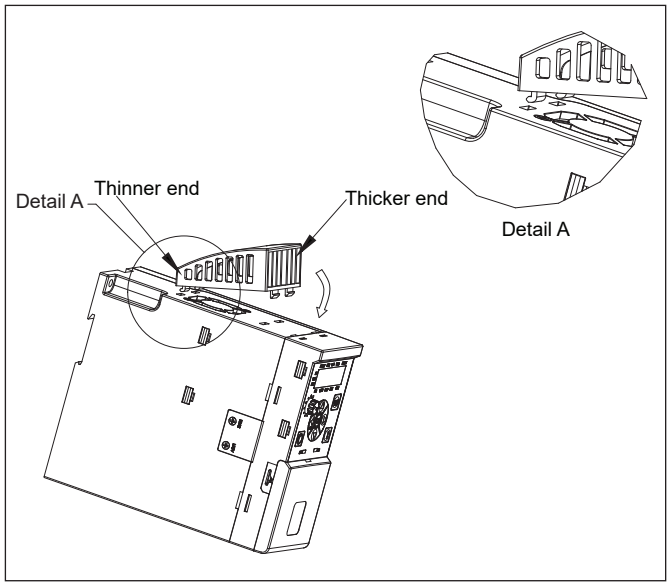

Step 2

Remove the two screws ③, NEMA 1 kit front cover ①, and terminal cover ② (See A).

Remove the two screws ④, NEMA 1 kit left cover ⑤, and NEMA 1 kit right plate ⑥ (See B).

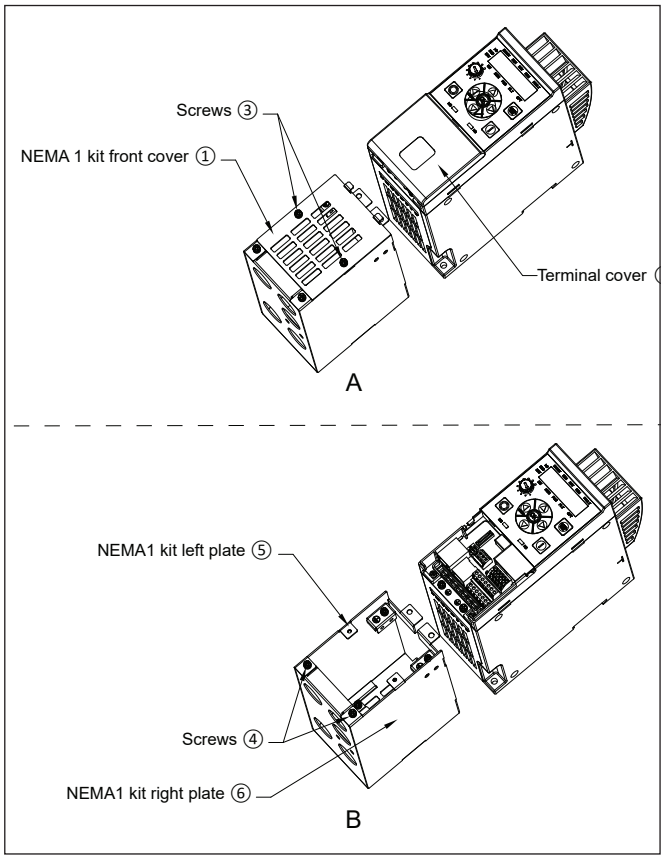

Step 3

Mount the conduit fittings ⑧⑨ on the NEMA 1 kit main frame ⑦. Then insert the hooks on bottom plate into the corresponding rectangular openings on drive bottom surface.

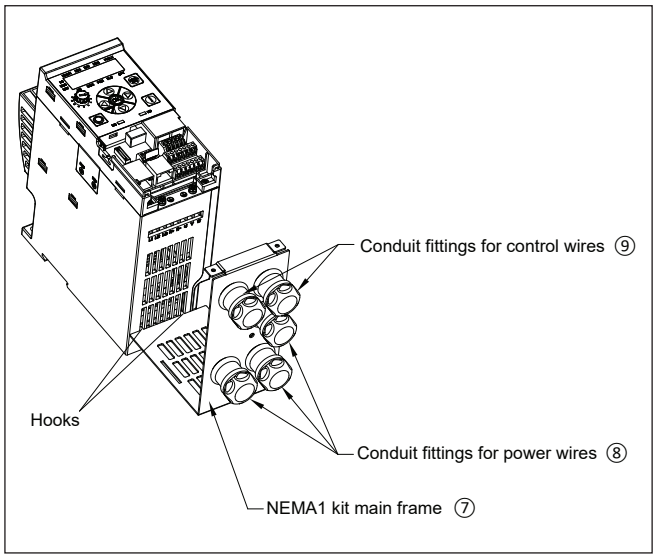

Table 18. Conduit fitting for wires.

	Conduit fitting for control wires	Conduit fitting for power wires
FR1	0.5 inch, 2 pcs.	0.5 inch, 3 pcs.
FR2	0.5 inch, 2 pcs.	0.75 inch, 3 pcs.
FR3	0.5 inch, 2 pcs.	0.75 inch, 3 pcs.
FR4	0.5 inch, 2 pcs.	1.0 inch, 3 pcs.

Step 4

Power wiring for EMI version drive:

1. Run input cable (including three line wires and one input grounding wire) through conduit fitting and input magnetic core ⑩, then connect to L1/L2/L3 terminals, leave the input grounding wire ⑪ unconnected. Tie the input magnetic core to the input wires with a cable tie (See A).
2. Run the output cable (including three motor wires and one output grounding wire) through conduit fitting and EMC grounding clamp ⑭. Run the three motor wires without the output grounding wire through the output magnetic core ⑫. Connect the motor wires to U/V/W terminals. Leave the output grounding wire ⑬ unconnected. Tie output magnetic core to the output wires with a cable tie. Use the EMC grounding clamp ⑭ and two screws ⑮ to fix output cable shielding layer (See B).

Power wiring for non-EMI version drive:

Run input cable (including three line wires and one input grounding wire) through conduit fitting. Connect to L1/L2/L3 terminals. Leave the input grounding wire ⑪ unconnected

3. Run the output cable (including three motor wires and one output grounding wire) through conduit fitting and EMC grounding clamp ⑭. Connect the motor wires to U/V/W terminals. Leave the output grounding wire ⑬ unconnected. Use the EMC grounding clamp ⑭ and two screws ⑮ to fix output cable shielding layer.

Control wiring:

1. Run control wires (RJ45, ethernet, I/O, STO, relay, etc.) through control wire conduit fittings ⑨ and connect to corresponding terminals or connectors.

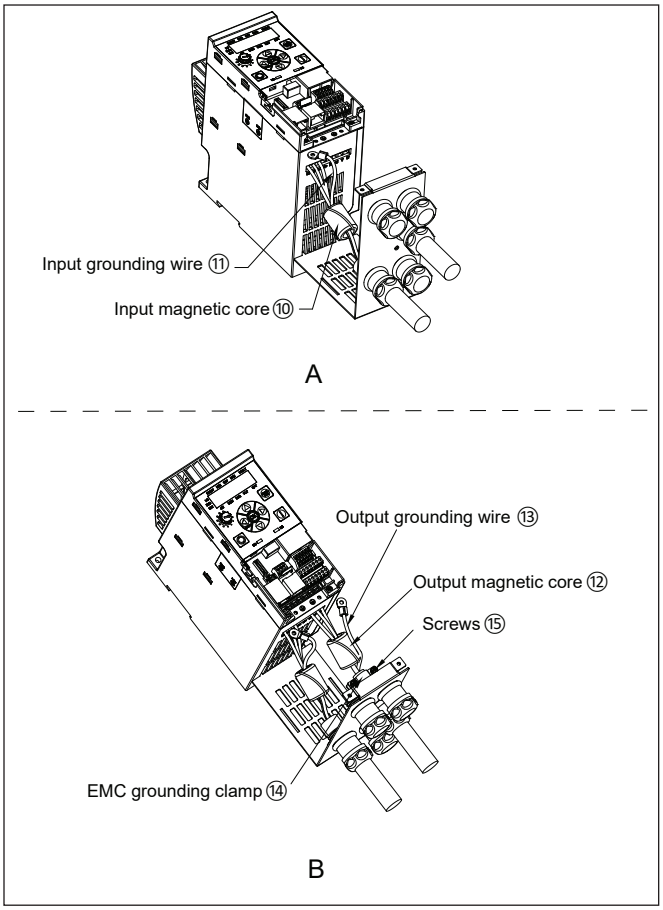

Step 5

Mount the NEMA 1 kit left plate ⑤ and right plate ⑥ back to the NEMA 1 kit main frame ⑦ and drive with screws ④ and ⑯. Then connect the input grounding wire ⑪ and output grounding wire ⑬ to the grounding holes on NEMA 1 kit left plate ⑤ and NEMA 1 kit right plate ⑥ (See A).

Mount the terminal cover ② back to the drive. Mount NEMA 1 kit front cover ① back to the conduit box with screws ③ (See B).

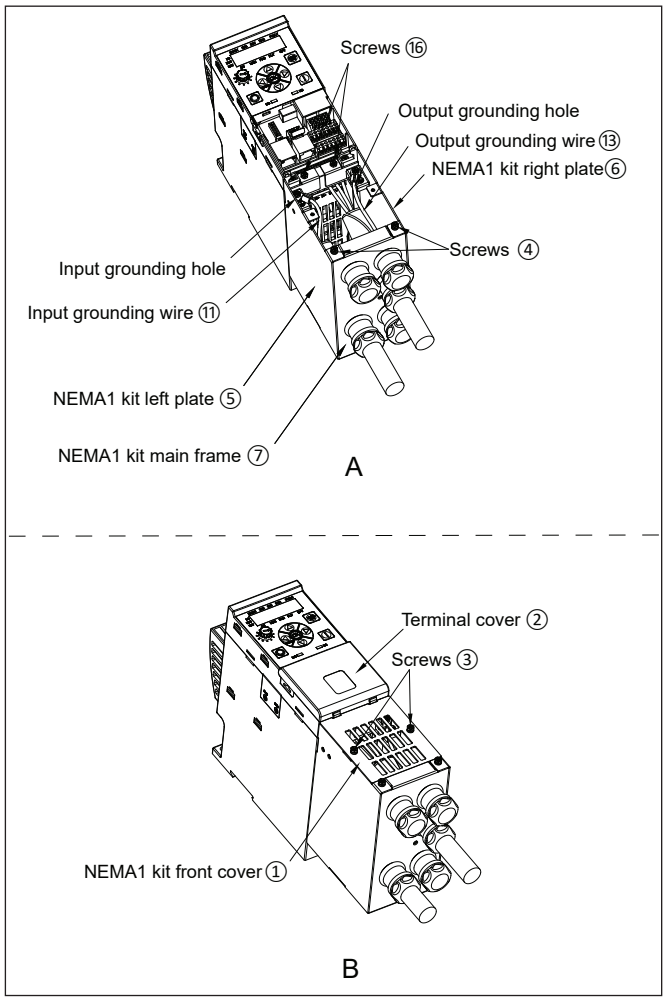

Installation steps for DM1 FR2-FR4 NEMA 1 kits

Step 1

Align the four hooks on fan cover with the four slots around the fan venting holes on top surface of drive. Push the snap joints into slots. The thicker end of fan cover should face the front surface of the drive.

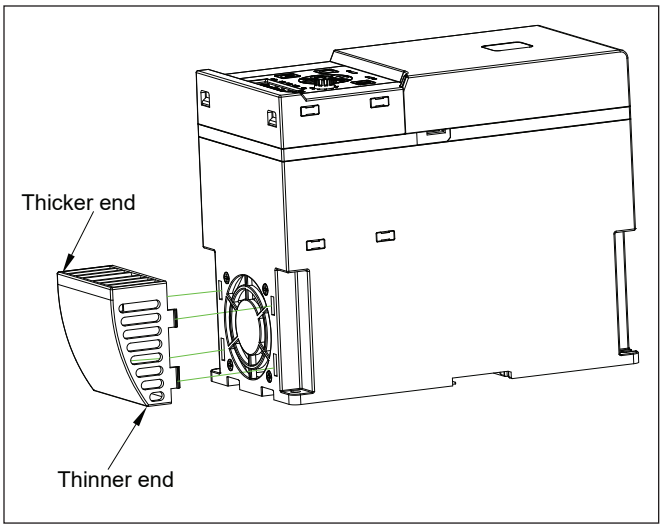

Step 2

Remove the two screws ③, NEMA 1 kit front cover ①, and terminal cover ② (See A).

Insert the hooks on back surface of NEMA 1 kit main frame ⑦ into the corresponding rectangular openings on drive bottom surface, then use two screws ⑯ to fix the conduit box to the metal grounding plate of drive (See B).

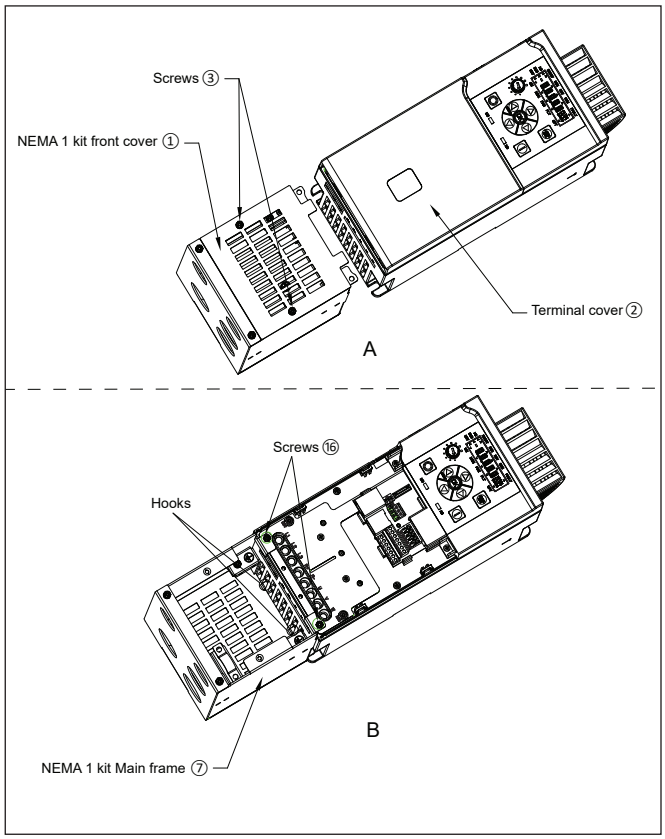

Step 3

Remove the two screws ④ and NEMA 1 kit bottom plate ⑤ (See A).

Mount the conduit fittings ⑧ and ⑨ on NEMA 1 kit bottom plate ⑤ (See B).

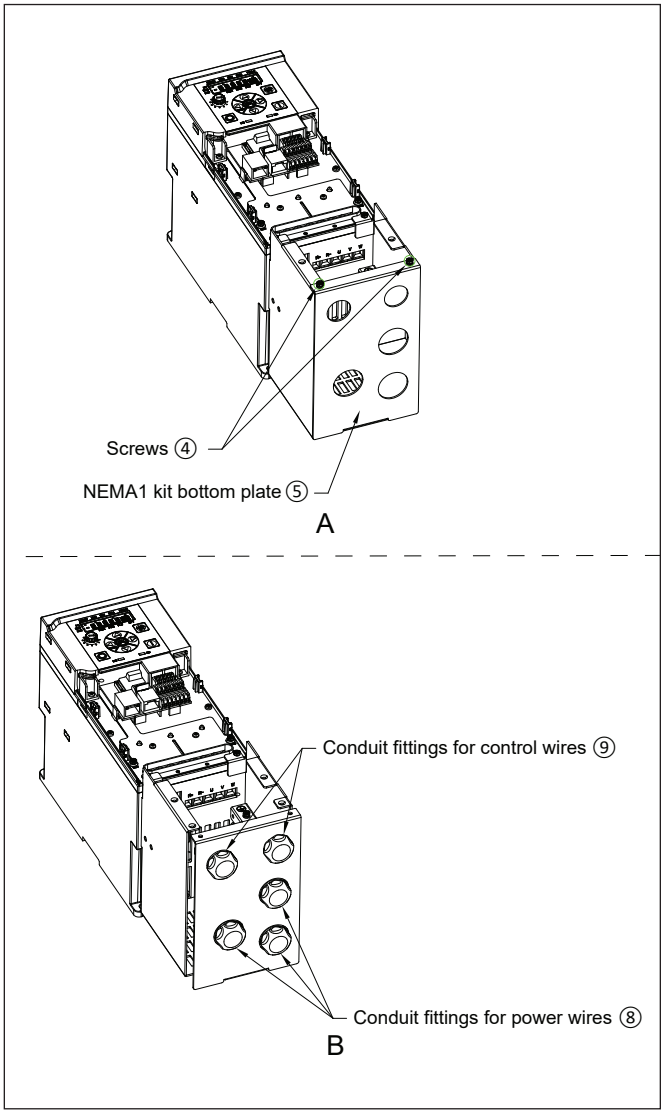

Step 4

Power wiring for EMI version drive:

1. Run input cable (including three line wires and one input grounding wire) through conduit fitting and input magnetic core ⑩. Connect the input grounding wire ⑪ to the input grounding hole on NEMA 1 main frame ⑦. Connect the three line wires to L1/L2/L3 terminals. Tie the input magnetic core ⑩ to the input wires with a cable tie (See A).
2. Run the output cable (including three motor wires and one output grounding wire) through conduit fitting and EMC grounding clamp ⑭. Run the three motor wires without the output grounding wire through the output magnetic core ⑫. Connect the output grounding wire ⑬ to the output grounding hole on NEMA 1 main frame ⑦. Connect the motor wires to U/V/W terminals. Tie output magnetic core to the output wires with a cable tie. Use the EMC grounding clamp ⑭ and two screws ⑮ to fix output cable shielding layer (See B).

Power wiring for non-EMI version drive:

1. Run input cable (including three line wires and one input grounding wire) through conduit fitting. Connect the input grounding wire ⑪ to the input grounding hole on NEMA 1 main frame. Connect three line wires to L1/L2/L3 terminals.
2. Run the output cable (including three motor wires and one output grounding wire) through conduit fitting and EMC grounding clamp ⑭. Connect the output grounding wire ⑬ to the output grounding hole on NEMA 1 main frame ⑦. Connect the motor wires to U/V/W terminals. Use the EMC grounding clamp ⑭ and two screws ⑮ to fix output cable shielding layer.

Control wiring:

1. Run control wires (RJ45, ethernet, I/O, STO, relay, etc.) through control wire conduit fittings ⑨ and connect to corresponding terminals or connectors.

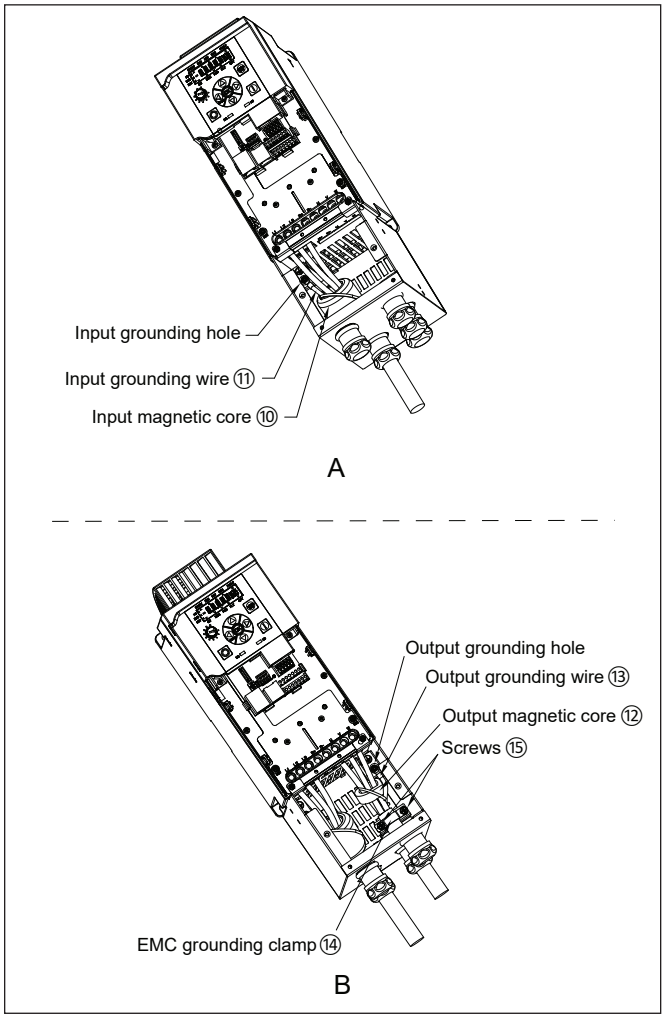

Step 5

Mount the NEMA 1 kit bottom plate ⑤ back to the NEMA 1 kit main frame ⑦ with two screws ④.

Mount the terminal cover ② back to the drive. Mount NEMA 1 kit front cover ① back to the NEMA 1 kit main frame ⑦ with two screws ③.

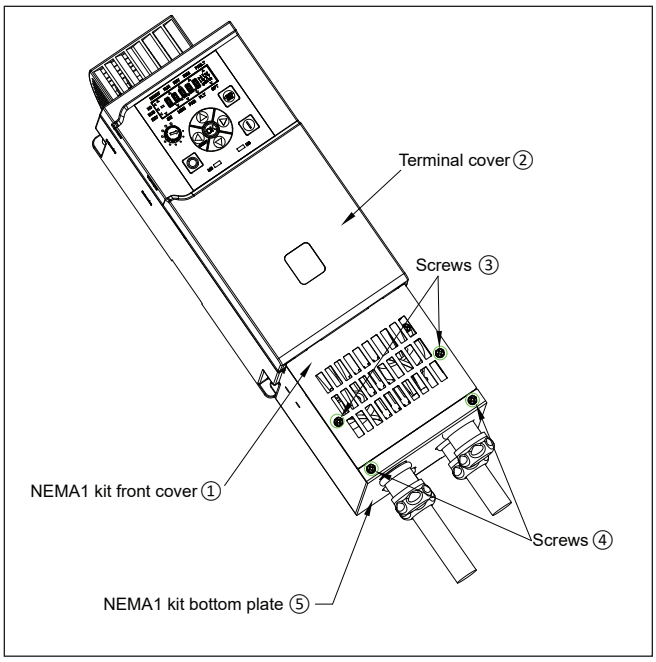

Keypad remote mounting kit

Remote keypad kit component list

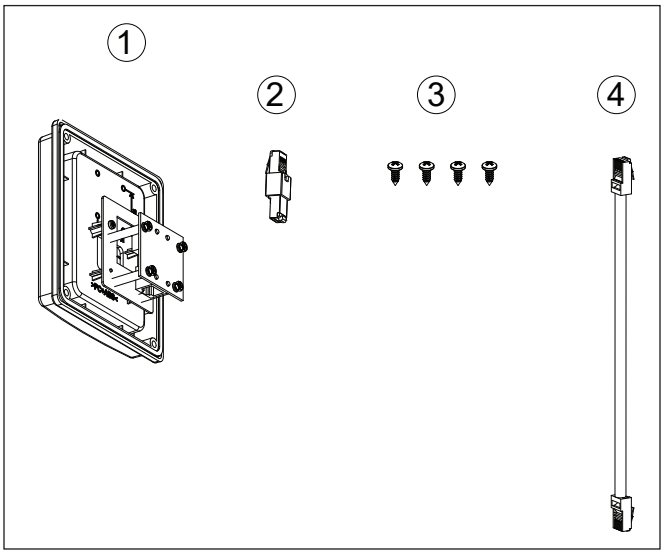

1. Keypad mounting bezel (with adapter board and seal strip pre-installed).
2. Male to male RJ45 connector.
3. Screws (M4.8 x 13).
4. RJ45 cable.

Step 1

Attach the keypad bezel (with adapter board and seal strip pre-installed) to the mounting plate with 4 M4.8 x 13 screws.

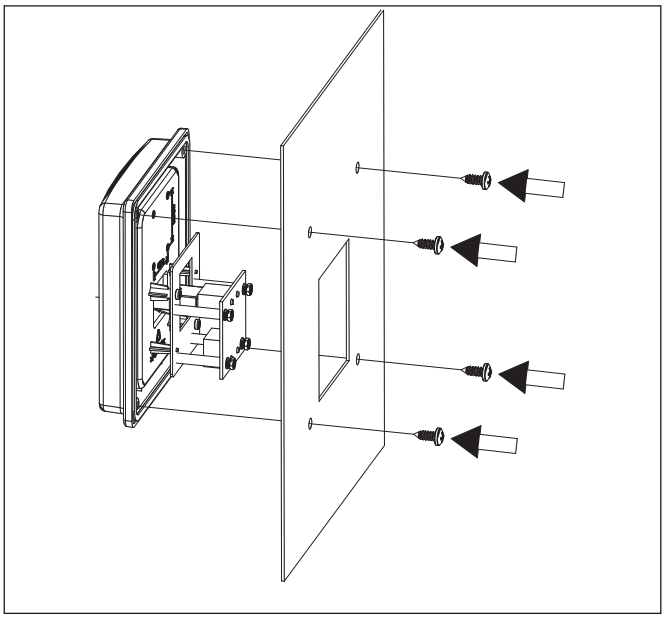

Step 2

Connect one end of the RJ45 cable to the female connector of the adapter board and the other end connect to the drive inside the cabinet.

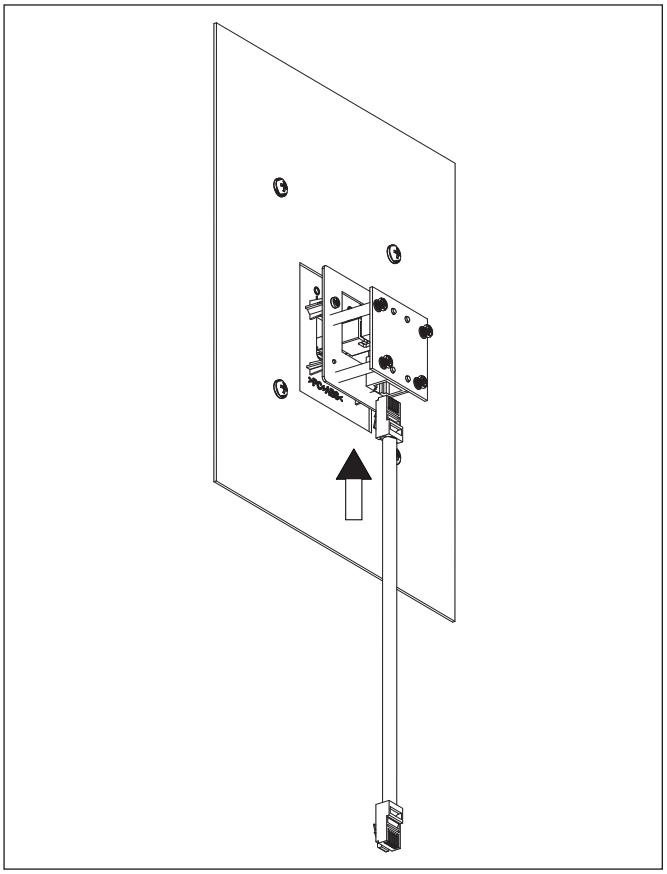

Step 3

Push the keypad into the mounting bezel and connect it to the drive inside the cabinet.

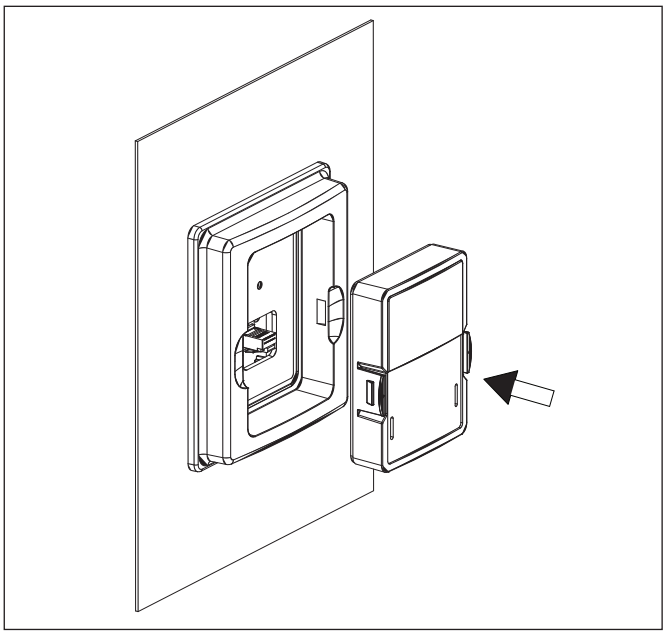

Step 4

Connect to PC (connect drive inside the cabinet to a computer outside):

1. Remove the keypad and male to male RJ45 connector.

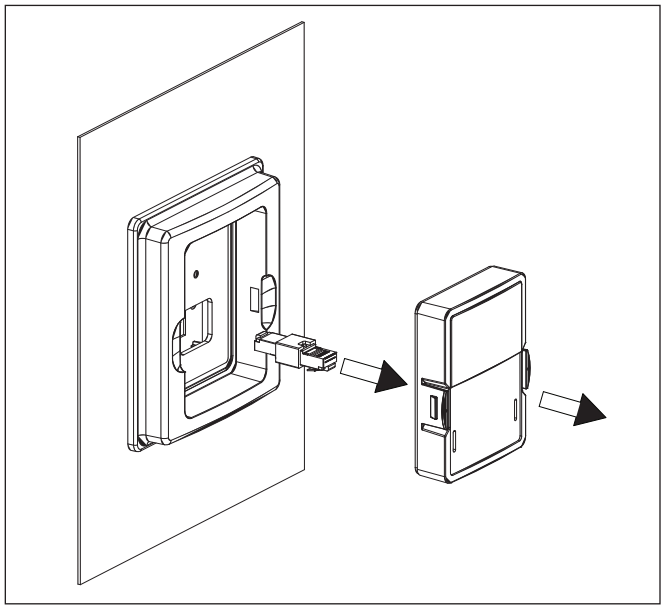

2. Connect the female RJ45 port of remote keypad kit and computer with a RJ45 cable.

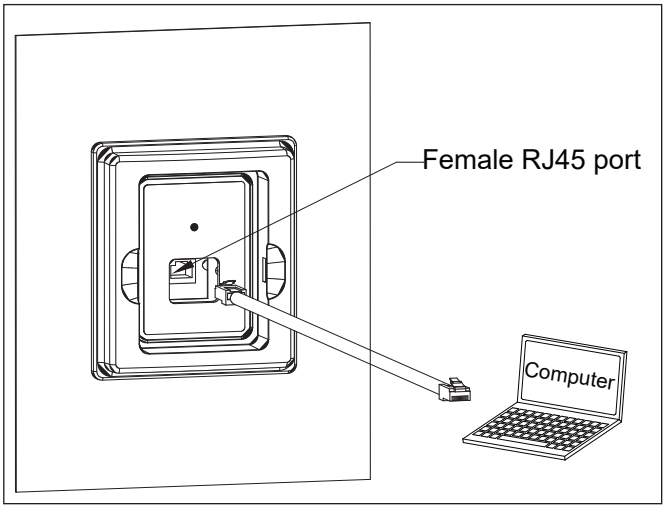

Keypad mounting template

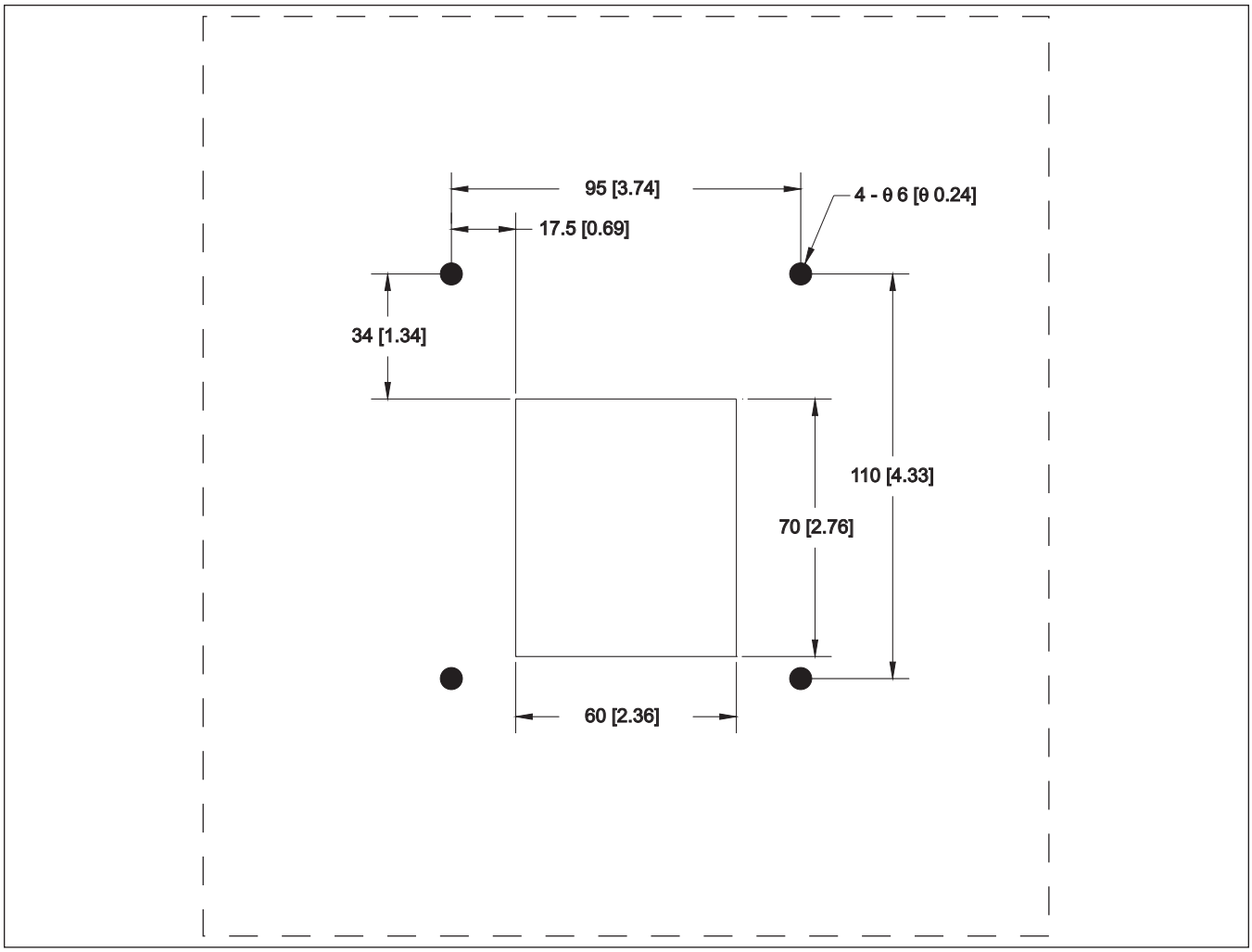

Chapter 5—Electrical installation

Note: All following information is strongly recommended but is not necessary if sufficient system design and validation has been completed.

This chapter contains all of the information required to properly install and prepare the PowerXL Series VFD for operation. The contents are listed to serve as a list of tasks needed to complete the installation. Included in this section are:

- Cable selection;
- Mains connection diagram;
- Connection tightening torque;
- Grounding;
- EMC requirements;
- Installation in corner grounded networks and IT networks;
- Checking motor and cable insulation.

Electrical installation warnings and cautions

WARNING

Carry out wiring work only after the frequency inverter has been correctly mounted and secured.

WARNING

Electric shock hazard—risk of injuries!

Carry out wiring work only if the unit is de-energized.

CAUTION

Debounced inputs may not be used in the safety circuit diagram.

Fire hazard!

Only use cables, protective switches, and contactors that feature the indicated permissible nominal current value.

CAUTION

Debounced inputs may not be used in the safety circuit diagram.

According to product standard IEC/EN 61800-5-1, an additional equipment grounding (PE) conductor of the same cross-sectional area as the original protective earthing conductor must be connected, or the cross-section of the equipment grounding conductor must be at least 10 mm^2 Cu.

WARNING

The components in the drive's power section remain energized after the supply voltage has been switched off. After disconnecting the supply, wait at least five minutes before removing the cover to allow the intermediate circuit capacitors to discharge.

Pay attention to hazard warnings!

Power wiring selection

Motor cable connections are made to terminals U, V, and W.

Cable selection: Power and motor leads

- Select the mounting location based on requirements listed. Use UL approved heat-resistant copper cables only.
- 75°C or higher for all units rated.
- Line voltage/mains should be Class 1 wire only outside.
- North America.
- Refer to Appendix B for cable sizing guidelines.

Line (mains) and motor cable installation

The input line and motor cables must be sized in accordance with the rated PowerXL VFD input and output current.

If motor temperature sensing is used for overload protection, the output cable size may be selected based on the motor specifications.

Maximum symmetrical supply current is 100,000 A RMS for all size PowerXL VFDs.

Input protection

Input protection devices are rated based on PowerXL rated input and output current. For UL and cUL/CSA, refer to **Appendix D** for proper sizing. For gG/gL (IEC 60269-1), refer to **Appendix B** for proper sizing.

Consult with service representative for further information about input protection requirements

Table 19. Stripping lengths.

Frame size	Power wiring				Motor wiring			
	A1 in. (mm)	B1 in. (mm)	C1 in. (mm)	D1 in. (mm).	A2 in. (mm)	B2 in. (mm)	C2 in. (mm)	D2 in. (mm)
FR1	0.39 (10)	2.76 (70)	0.39 (10)	2.76 (70)	0.39 (10)	2.76 (70)	0.39 (10)	2.76 (70)
FR2	0.47 (12)	2.76 (70)	0.47 (12)	2.76 (70)	0.47 (12)	2.76 (70)	0.47 (12)	2.76 (70)
FR3	0.47 (12)	3.54 (90)	0.47 (12)	3.54 (90)	0.47 (12)	3.54 (90)	0.47 (12)	3.54 (90)
FR4	0.79 (20)	4.53 (115)	0.79 (20)	4.53 (115)	0.79 (20)	4.53 (115)	0.79 (20)	4.53 (115)

Note: For I/O/STO/relay output wires, the stripping lengths = 0.236 in. (6-7 mm)

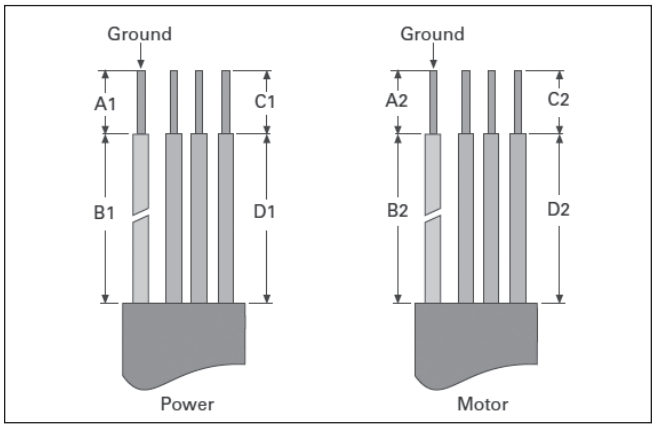

Table 20. Connection sizes and torques①②③.

			Output rating		Size and torque						
Input voltage	Frame size	Drive catalog number	CT/I_H current amps	VT/I_L current amps	Power wire size AWG (mm²)	Power wire torque in.-lb (N·m)	Ground wire size AWG (mm²)	Ground wire torque in.-lb (N·m)	Control wire size AWG (mm²)	Control wire torque in.-lb (N·m) AI/DI	RO
100 Vac to 120 Vac 50/60 Hz 1-phase	FR1	DM1-111D6…	1.6	2.5	14 (2.5)	4.4 (0.5)	10 (2.5)	7.1 (0.8)	28-16 (0.5-1.5)	AI/DI: 1.73(0.2); RO: 4.5 (0.5)	4.5 (0.5)
		DM1-113D0…	3	4.8	10 (6)	4.4 (0.5)	8 (6)	7.1 (0.8)	28-16 (0.5-1.5)	AI/DI: 1.73(0.2); RO: 4.5 (0.5)	4.5 (0.5)
	FR2	DM1-114D8…	4.8	6.9	8 (10)	10.5 (1.2)	8 (10)	7.1 (0.8)	28-16 (0.5-1.5)	AI/DI: 1.73(0.2); RO: 4.5 (0.5)	4.5 (0.5)
		DM1-116D9…	6.9	7.8	8 (10)	10.5 (1.2)	6 (10)	7.1 (0.8)	28-16 (0.5-1.5)	AI/DI: 1.73(0.2); RO: 4.5 (0.5)	4.5 (0.5)
200 Vac to 240 Vac 50/60 Hz 1-phase"	FR1	DM1-121D6…	1.6	2.5	14 (2.5)	4.4 (0.5)	14 (2.5)	7.1 (0.8)	28-16 (0.5-1.5)	AI/DI: 1.73(0.2); RO: 4.5 (0.5)	4.5 (0.5)
		DM1-123D0…	3	4.8	14 (2.5)	4.4 (0.5)	10 (2.5)	7.1 (0.8)	28-16 (0.5-1.5)	AI/DI: 1.73(0.2); RO: 4.5 (0.5)	4.5 (0.5)
		DM1-124D8…	4.8	7.8	10 (6)	4.4 (0.5)	8 (6)	7.1 (0.8)	28-16 (0.5-1.5)	AI/DI: 1.73(0.2); RO: 4.5 (0.5)	4.5 (0.5)
	FR2	DM1-127D8…	7.8	11	10 (6)	10.5 (1.2)	8 (6)	7.1 (0.8)	28-16 (0.5-1.5)	AI/DI: 1.73(0.2); RO: 4.5 (0.5)	4.5 (0.5)
		DM1-12011…	11	17.5	8 (10)	10.5 (1.2)	6 (10)	7.1 (0.8)	28-16 (0.5-1.5)	AI/DI: 1.73(0.2); RO: 4.5 (0.5)	4.5 (0.5)
	FR3	DM1-12017…	17.5	25.3	6 (16)	10.5 (1.2)	6 (16)	14.2 (1.6)	28-16 (0.5-1.5)	AI/DI: 1.73(0.2); RO: 4.5 (0.5)	4.5 (0.5)

Table 20. Connection sizes and torques①②③ (continued).

			Output rating		Size and torque						
Input voltage	**Frame size**	**Drive catalog number**	**CT/I_H current amps**	**VT/I_L current amps**	**Power wire size AWG (mm²)**	**Power wire torque in.-lb (N·m)**	**Ground wire size AWG (mm²)**	**Ground wire torque in.-lb (N·m)**	**Control wire size AWG (mm²)**	**Control wire torque in.-lb (N·m) AI/DI**	**RO**
200 Vac to 240 Vac 50/60 Hz 3-phase	FR1	DM1-321D6…	1.6	2.5	14 (2.5)	4.4 (0.5)	14 (2.5)	7.1 (0.8)	28-16 (0.5-1.5)	1.73 (0.2)	4.5 (0.5)
		DM1-323D0…	3	4.8	14 (2.5)	4.4 (0.5)	14 (2.5)	7.1 (0.8)	28-16 (0.5-1.5)	1.73 (0.2)	4.5 (0.5)
		DM1-324D8…	4.8	7.8	14 (2.5)	4.4 (0.5)	12 (2.5)	7.1 (0.8)	28-16 (0.5-1.5)	1.73 (0.2)	4.5 (0.5)
		DM1-327D8…	7.8	11	12 (4)	4.4 (0.5)	10 (4)	7.1 (0.8)	28-16 (0.5-1.5)	1.73 (0.2)	4.5 (0.5)
	FR2	DM1-32011…	11	17.5	10 (6)	10.5 (1.2)	10 (6)	7.1 (0.8)	28-16 (0.5-1.5)	1.73 (0.2)	4.5 (0.5)
		DM1-32017…	17.5	25.3	8 (10)	10.5 (1.2)	10 (10)	7.1 (0.8)	28-16 (0.5-1.5)	1.73 (0.2)	4.5 (0.5)
	FR3	DM1-32025…	25.3	32.2	8 (10)	10.5 (1.2)	8 (10)	14.2 (1.6)	28-16 (0.5-1.5)	1.73 (0.2)	4.5 (0.5)
	FR4	DM1-32032…	32.2	48.3	4 (25)	33 (3.73)	8 (16)	14.2 (1.6)	28-16 (0.5-1.5)	1.73 (0.2)	4.5 (0.5)
		DM1-32048…	48.3	62.1	3 (35)	33 (3.73)	6 (16)	14.2 (1.6)	28-16 (0.5-1.5)	1.73 (0.2)	4.5 (0.5)
380 Vac to 480 Vac 50/60 Hz 3-phase	FR1	DM1-341D5…	1.5	2.2	14 (2.5)	4.4 (0.5)	14 (2.5)	7.1 (0.8)	28-16 (0.5-1.5)	1.73 (0.2)	4.5 (0.5)
		DM1-342D2…	2.2	4.3	14 (2.5)	4.4 (0.5)	14 (2.5)	7.1 (0.8)	28-16 (0.5-1.5)	1.73 (0.2)	4.5 (0.5)
		DM1-344D3…	4.3	5.6	14 (2.5)	4.4 (0.5)	14 (2.5)	7.1 (0.8)	28-16 (0.5-1.5)	1.73 (0.2)	4.5 (0.5)
		DM1-345D6…	5.6	7.6	14 (2.5)	4.4 (0.5)	10 (2.5)	7.1 (0.8)	28-16 (0.5-1.5)	1.73 (0.2)	4.5 (0.5)
	FR2	DM1-347D6…	7.6	12	12 (4)	10.5 (1.2)	10 (4)	7.1 (0.8)	28-16 (0.5-1.5)	1.73 (0.2)	4.5 (0.5)
		DM1-34012…	12	16	10 (6)	10.5 (1.2)	10 (6)	7.1 (0.8)	28-16 (0.5-1.5)	1.73 (0.2)	4.5 (0.5)
		DM1-34016…	16	23	8 (10)	10.5 (1.2)	10 (10)	7.1 (0.8)	28-16 (0.5-1.5)	1.73 (0.2)	4.5 (0.5)
	FR3	DM1-34023..	23	31	8 (10)	10.5 (1.2)	8 (10)	14.2 (1.6)	28-16 (0.5-1.5)	1.73 (0.2)	4.5 (0.5)
	FR4	DM1-34031…	31	38	6 (16)	33 (3.73)	8 (16)	14.2 (1.6)	28-16 (0.5-1.5)	1.73 (0.2)	4.5 (0.5)
		DM1-34038…	38	46	4 (25)	33 (3.73)	8 (16)	14.2 (1.6)	28-16 (0.5-1.5)	1.73 (0.2)	4.5 (0.5)
525 Vac to 600 Vac 50/60 Hz 3-phase	FR2	DM1-354D5…	4.5	7.5	-	-	-	-	28-16 (0.5-1.5)	1.73 (0.2)	4.5 (0.5)
		DM1-357D5…	7.5	10	-	-	-	-	28-16 (0.5-1.5)	1.73 (0.2)	4.5 (0.5)
		DM1-35010…	10	13.5	-	-	-	-	28-16 (0.5-1.5)	1.73 (0.2)	4.5 (0.5)
	FR3	DM1-35013…	13.5	18	-	-	-	-	28-16 (0.5-1.5)	1.73 (0.2)	4.5 (0.5)
	FR4	DM1-35018…	18	22	-	-	-	-	28-16 (0.5-1.5)	1.73 (0.2)	4.5 (0.5)
		DM1-35022…	22	27	-	-	-	-	28-16 (0.5-1.5)	1.73 (0.2)	4.5 (0.5)

Notes:

① Line and motor cable size is selected according to UL 61800-5-1 for copper conductor rated 75°C. Use only with copper wire rated 75°C here. Size requirements for other different wire types are defined in the National Electrical Code®, ANSI/NFPA® 70.

② Earthing conductor size is determined by the maximum overcurrent device rating used ahead of the drive according to UL 61800-5-1.

③ If power cubes or bypass are used, a UL listed Class J, T, CF, CC or equivalent fuse is recommended.

Cable and fuse guidelines

Table 21. North America cable and fuse sizes①②④.

UL cable and fuse sizes

			Output rating		Input rating		UL application							
Input voltage	**Frame size**	**Drive catalog number**	**CT/I_H current amps**	**VT/I_L current amps**	**CT/I_H current amps**	**VT/I_L current amps**	**Recommended fuse (Class J, T, CF, or CC) (max. rating) 100 kAIC①**	**Recommended miniature inverse-time molded-case circuit breaker (max. rating) 10/14 kAIC①**	**Recommended type E CMC (max. Rating) 65 kAIC②**	**Recommended inverse-time molded-case circuit breaker (max. rating) 100 kAIC (Open type only for 3-phase)①**	**NEC wire size line and motor AWG**	**NEC wire size ground AWG**	**Terminal size line and motor AWG**	**Terminal size ground AWG**
100 Vac to 120 Vac 50/60 Hz 1-phase	FR1	DM1-111D6…	1.6	2.5	6.4	10	30	30	\	30	14	10	18-8	16-8
		DM1-113D0…	3	4.8	13.5	20	70	63	\	70	10	8	18-8	16-8
	FR2	DM1-114D8…	4.8	6.9	20	26.4	90	63	\	90	8	8	20-6	12-6
		DM1-116D9…	6.9	7.8	26.4	30	125	63	\	125	8	6	20-6	12-6
200 Vac to 240 Vac 50/60 Hz 1-phase	FR1	DM1-121D6…	1.6	2.5	4	6.5	15	15	\	15	14	14	18-8	16-8
		DM1-123D0…	3	4.8	8	11	30	30	\	30	14	10	18-8	16-8
		DM1-124D8…	4.8	7.8	11	17	60	63	\	60	10	8	18-8	16-8
	FR2	DM1-127D8…	7.8	11	18	23	80	63	\	80	10	8	20-6	12-6
		DM1-12011…	11	17.5	23	35	125	63	\	125	8	6	20-6	12-6
	FR3	DM1-12017…	17.5	25.3	38	49.6	200	\	\	200	6	6	20-6	8-6
200 Vac to 240 Vac 50/60 Hz 3-phase	FR1	DM1-321D6…	1.6	2.5	2.1	3.3	6	5	XTPR6P3BC1 + XTPAXLSA or PKZM0-6.3 + BK25/3-PKZ0-E	15	14	14	18-8	16-10
		DM1-323D0…	3	4.8	3.9	5.8	15	10	XTPR6P3BC1 + XTPAXLSA or PKZM0-6.3 + BK25/3-PKZ0-E	15	14	14	18-8	16-10
		DM1-324D8…	4.8	7.8	5.8	9.4	20	15	XTPR010BC1 + XTPAXLSA or PKZM0-10 + BK25/3-PKZ0-E	15	14	12	18-8	16-10
		DM1-327D8…	7.8	11	9.4	13.2	30	20	XTPR016DC1 + XTPAXLSAD or PKZM4-16 + BK50/3-PKZ4-E	20	12	10	18-8	16-10
	FR2	DM1-32011…	11	17.5	12.7	20.1	40	30	XTPR025DC1 + XTPAXLSAD or PKZM4-25 + BK50/3-PKZ4-E	30	10	10	20-6	12-8
		DM1-32017…	17.5	25.3	20.1	29.1	60	40	XTPR032DC1 + XTPAXLSAD or PKZM4-32 + BK50/3-PKZ4-E	45	8	10	20-6	12-8
	FR3	DM1-32025…	25.3	32.2	29.1	37	70	50	XTPR040DC1 + XTPAXLSAD or PKZM4-40 + BK50/3-PKZ4-E	50	8	8	20-6	10-8
	FR4	DM1-32032…	32.2	48.3	35.4	53.1	100	\	\	80	4	8	20-2	8-6
		DM1-32048…	48.3	62.1	53.1	68.3	125	\	\	100	3	6	20-2	8-6

Table 21. North America cable and fuse sizes①②④ (continued).

UL cable and fuse sizes

			Output rating		Input rating		UL application							
Input voltage	**Frame size**	**Drive catalog number**	**CT/I_H current amps**	**VT/I_L current amps**	**CT/I_H current amps**	**VT/I_L current amps**	**Recommended fuse (Class J, T, CF, or CC) (max. rating) 100 kAIC①**	**Recommended miniature inverse-time molded-case circuit breaker (max. rating) 10/14 kAIC①**	**Recommended type E CMC (max. Rating) 65 kAIC②**	**Recommended inverse-time molded-case circuit breaker (max. rating) 100 kAIC (Open type only for 3-phase)①**	**NEC wire size line and motor AWG**	**NEC wire size ground AWG**	**Terminal size line and motor AWG**	**Terminal size ground AWG**
380 Vac to 480 Vac 50/60 Hz 3-phase	FR1	DM1-341D5…	1.5	2.2	1.8	2.6	6	4	XTPR6P3BC1 + XTPAXLSA or PKZM0-6.3 + BK25/3-PKZ0-E	15	14	14	18-8	16-10
		DM1-342D2…	2.2	4.3	2.6	5.2	10	8	XTPR6P3BC1 + XTPAXLSA or PKZM0-6.3 + BK25/3-PKZ0-E	15	14	14	18-8	16-10
		DM1-344D3…	4.3	5.6	5.2	6.7	15	10	XTPR010BC1 + XTPAXLSA or PKZM0-10 + BK25/3-PKZ0-E	15	14	14	18-8	16-10
		DM1-345D6…	5.6	7.6	6.7	9.1	30	15	XTPR010BC1 + XTPAXLSA or PKZM0-10 + BK25/3-PKZ0-E	15	14	10	18-8	16-10
	FR2	DM1-347D6…	7.6	12	9.1	14.4	30	20	XTPR016DC1 + XTPAXLSAD or PKZM4-16 + BK50/3-PKZ4-E	20	12	10	20-6	12-8
		DM1-34012…	12	16	14.4	19.2	40	25	XTPR025DC1 + XTPAXLSAD or PKZM4-25 + BK50/3-PKZ4-E	30	10	10	20-6	12-8
		DM1-34016…	16	23	19.2	27.6	60	32	XTPR032DC1 + XTPAXLSAD or PKZM4-32 + BK50/3-PKZ4-E	40	8	10	20-6	12-8
	FR3	DM1-34023..	23	31	26.5	35.7	70	\	XTPR040DC1 + XTPAXLSAD or PKZM4-40 + BK50/3-PKZ4-E	50	8	8	20-6	10-8
	FR4	DM1-34031…	31	38	35.7	43.7	70	\	XTPR050DC1 + XTPAXLSAD or PKZM4-50 + BK50/3-PKZ4-E	70	6	8	20-2	8-6
		DM1-34038…	38	46	43.7	52.9	80	\	XTPR058DC1 + XTPAXLSAD or PKZM4-58 + BK50/3-PKZ4-E	80	4	8	20-2	8-6
525 Vac to 600 Vac 50/60 Hz 3-phase	FR2	DM1-354D5…	4.5	7.5										
		DM1-357D5…	7.5	10										
		DM1-35010…	10	13.5										
	FR3	DM1-35013…	13.5	18										
	FR4	DM1-35018…	18	22										
		DM1-35022…	22	27										

Notes:
① Can be any UL listed type with below ratings.
② Due to UL listing, only can be below Eaton types.
③ Line and motor cable size is selected according to UL 61800-5-1 for copper conductor rated 75°C. Use only with copper wire rated 75°C here. Size requirements for other different wire types are defined in the National Electrical Code®, ANSI/NFPA® 70.
④ Earthing conductor size is determined by the maximum overcurrent device rating used ahead of the drive according to UL 61800-5-1.
⑤ If power cubes or bypass are used, a UL listed Class J, T, CF, CC or equivalent fuse is recommended.
⑥ Refer to Appendix B for specific branch circuit protection devices types recommended by Eaton.

Table 22. International cable and fuse sizes①②.

IEC cable and fuse sizes

			Output rating		Input rating		IEC application							
Input voltage	**Frame size**	**Catalog number**	**CT/I_H current amps**	**VT/I_L current amps**	**CT/I_H current amps**	**VT/I_L current amps**	**Recom-mended fuse (max. rating) 100 kAIC③**	**Recom-mended miniature circuit breaker (max. rating) 10/14 kAIC**	**Recom-mended Type E CMC (max. rating) 65 kAIC**	**Recom-mended circuit breaker (max. rating) 100 kAIC (Open type only for 3-phase)**	**IEC cable size line and motor mm²**	**IEC cable size ground mm²**	**Terminal size line and motor mm²**	**Terminal size ground mm²**
100 Vac to 120 Vac 50/60 Hz 1-phase	FR1	DM1-111D6	1.6	2.5	6.4	10	30	30	\	30	2.5	2.5	0.2-6	1-6
		DM1-113D0	3	4.8	13.5	20	70	63	\	70	6	6	0.2-6	1-6
	FR2	DM1-114D8	4.8	6.9	20	26.4	90	63	\	90	10	10	0.5-16	1-10
		DM1-116D9	6.9	7.8	26.4	30	125	63	\	125	10	10	0.5-16	1-10
200 Vac to 240 Vac 50/60 Hz 1-phase	FR1	DM1-121D6	1.6	2.5	4	6.5	15	15	\	15	2.5	2.5	0.2-6	1-6
		DM1-123D0	3	4.8	8	11	30	30	\	30	2.5	2.5	0.2-6	1-6
		DM1-124D8	4.8	7.8	11	17	60	63	\	60	6	6	0.2-6	1-6
	FR2	DM1-127D8	7.8	11	18	23	80	63	\	80	6	6	0.5-16	1-10
		DM1-12011	11	17.5	23	35	125	63	\	125	10	10	0.5-16	1-10
	FR3	DM1-12017	17.5	25.3	38	49.6	200	\	\	200	16	16	0.5-16	1-16
200 Vac to 240 Vac 50/60 Hz 3-phase	FR1	DM1-321D6	1.6	2.5	2.1	3.3	6	5	6.3	15	2.5	2.5	0.2-6	1.5-6
		DM1-323D0	3	4.8	3.9	5.8	15	10	6.3	15	2.5	2.5	0.2-6	1.5-6
		DM1-324D8	4.8	7.8	5.8	9.4	20	15	10	15	2.5	2.5	0.2-6	1.5-6
		DM1-327D8	7.8	11	9.4	13.2	30	20	16	20	4	4	0.2-6	1.5-6
	FR2	DM1-32011	11	17.5	12.7	20.1	40	30	25	30	6	6	0.5-16	4-10
		DM1-32017	17.5	25.3	20.1	29.1	60	40	32	45	10	10	0.5-16	4-10
	FR3	DM1-32025	25.3	32.2	29.1	37	70	50	40	50	10	10	0.5-16	6-10
	FR4	DM1-32032	32.2	48.3	35.4	53.1	100	\	\	80	25	16	0.5-35	10-16
		DM1-32048	48.3	62.1	53.1	68.3	125	\	\	100	35	16	0.5-35	10-16
380 Vac to 480 Vac 50/60 Hz 3-phase	FR1	DM1-341D5	1.5	2.2	1.8	2.6	6	4	6.3	15	2.5	2.5	0.2-6	1.5-6
		DM1-342D2	2.2	4.3	2.6	5.2	10	8	6.3	15	2.5	2.5	0.2-6	1.5-6
		DM1-344D3	4.3	5.6	5.2	6.7	15	10	10	15	2.5	2.5	0.2-6	1.5-6
		DM1-345D6	5.6	7.6	6.7	9.1	30	15	10	15	2.5	2.5	0.2-6	1.5-6
	FR2	DM1-347D6	7.6	12	9.1	14.4	30	20	16	20	4	4	0.5-16	4-10
		DM1-34012	12	16	14.4	19.2	40	25	25	30	6	6	0.5-16	4-10
		DM1-34016	16	23	19.2	27.6	60	32	32	40	10	10	0.5-16	4-10
	FR3	DM1-34023	23	31	26.5	35.7	70	\	40	50	10	10	0.5-16	6-10
	FR4	DM1-34031	31	38	35.7	43.7	70	\	50	70	16	16	0.5-35	10-16
		DM1-34038	38	46	43.7	52.9	80	\	58	80	25	16	0.5-35	10-16
525 Vac to 600 Vac 50/60 Hz 3-phase	FR2	DM1-354D5	4.5	7.5										
		DM1-357D5	7.5	10										
		DM1-35010	10	13.5										
	FR3	DM1-35013	13.5	18										
	FR4	DM1-35018	18	22										
		DM1-35022	22	27										

Notes:

① Line and motor cable size is selected according to IEC 60364-5-52 for copper conductor with PVC insulation with a wiring condition of ambient temperature 30°C in air and an installation method of "B2" (cables in conduit and cable trunking systems). For other wiring conditions, please refer to the standard of IEC 60364-5-52:2009 or suitable cable sizes.

② Earthing conductor size is determined by the cross-sectional area of phase conductors according to IEC/EN 61800-5-1. So if phase conductor size is changed, earthing conductor size should also be changed accordingly.

③ If power cubes or bypass are used, a class gG/gL fuse is recommended.

Installation overview for DM1

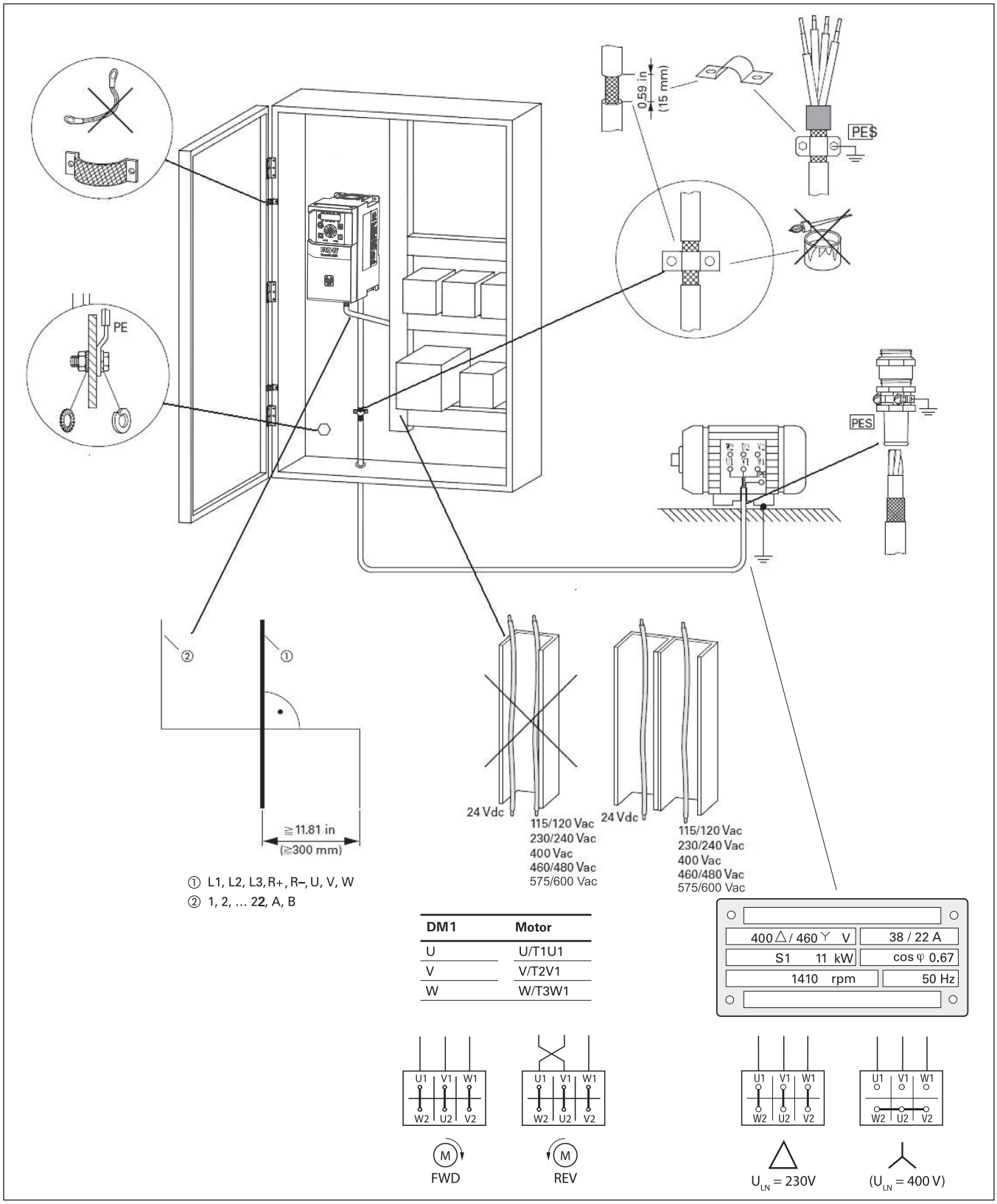

DM1	Motor
U	U/T1U1
V	V/T2V1
W	W/T3W1

Control board layout

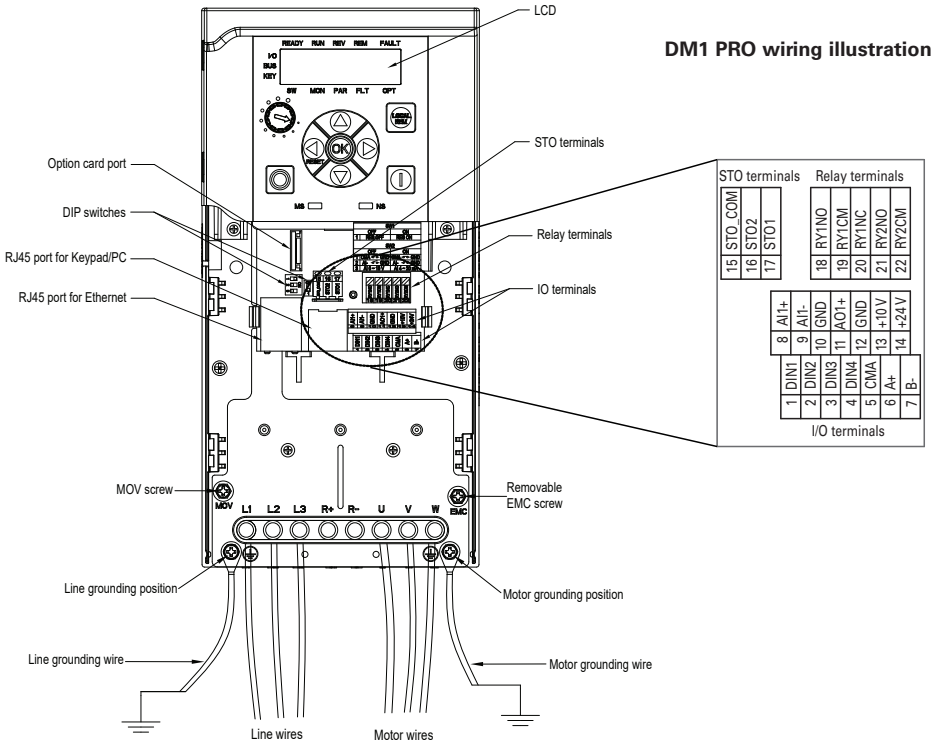

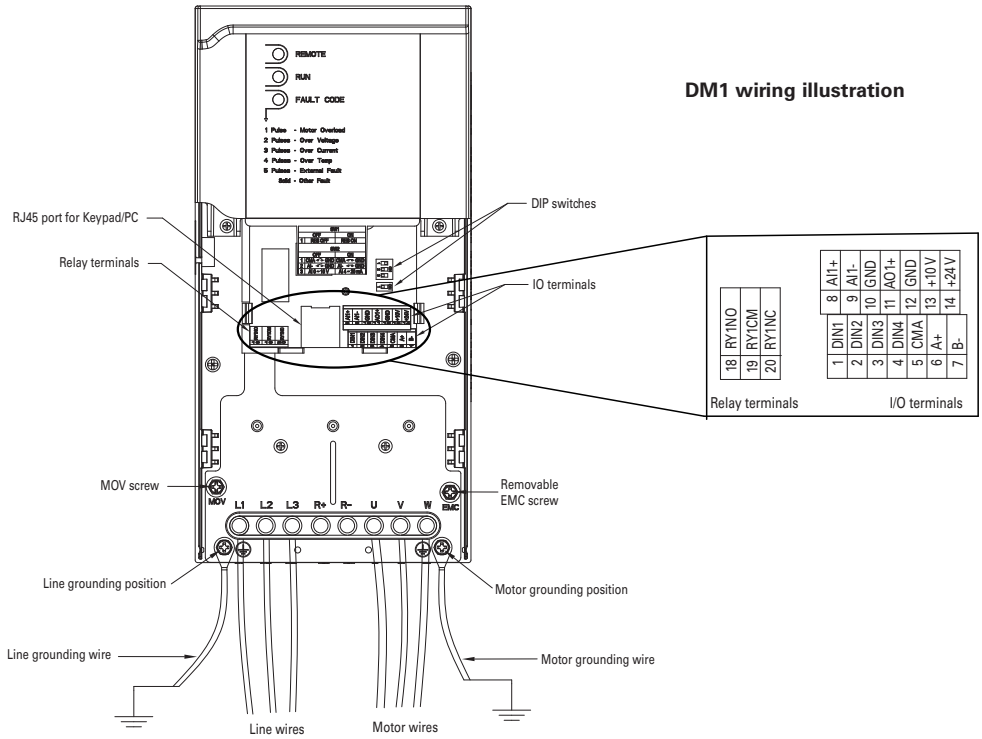

Factory-set control terminal functions

Table 23. I/O connection.

External wiring	Terminal	Short name	Name	Default setting	Description
	1	DI1	Digital input 1	Run forward	Starts the motor in the forward direction.
	2	DI2	Digital input 2	Run reverse	Start the motor in the reverse direction.
	3	DI3	Digital input 3	External fault	Triggers a fault in the drive.
	4	DI4	Digital input 4	Fault reset	Resets active faults in the drive.
	5	CMA	DI1 to DI4 common	Grounded	Allows for sourced input.
	6	A	RS-485 signal A	—	Fieldbus communication (Modbus RTU, BACNet).
	7	B	RS-485 signal B	—	Fieldbus communication (Modbus RTU, BACNet).
Res	8	AI1+ ①	Analog input 1	0 - 10 V	Voltage speed reference (programmable to 4 mA to 20 mA).
	9	AI1-	Analog input 1 ground	—	Analog input 1 common (ground).
	10	GND	I/O signal ground	—	I/O ground for reference and control.
	11	AO1+	Analog output 1	Output frequency	Shows output frequency to motor 0 - 60 Hz (4 mA to 20 mA).
	12	GND	I/O signal ground	—	I/O ground for reference and control.
	13	10 V	10 Vdc reference output	10.3 Vdc +/- 3%	10 Vdc reference voltage.
	14	24 V	24 Vdc control output	24 Vdc In/Out	Control voltage input/output (100 mA max.).
	15	STO_com	Safe torque common	—	Safe torque Off common.
	16	STO2	Safe torque Off 2	—	Safe torque Off 2 input.
	17	STO1	Safe torque Off 1	—	Safe torque Off 1 input.
	18	R1NO	Relay 1 normally open	Run	Changes state when the drive is in the run state.
	19	R1CM	Relay 1 common		
	20	R1NC	Relay 1 normally closed		
	21	R2NO	Relay 2 normally open	Fault	Changes state when the drive is in the fault state.
	22	R2CM	Relay 2 common		

Notes:
The above wiring demonstrates a SINK configuration. It is important that CMA is wired to ground (as shown by dashed line).

If a SOURCE configuration is desired, wire 24 V to CMA and close the inputs to ground. When using the +10 V for AI1, it is important to wire AI1- to ground (as shown by dashed line).

① AI1+ support 10 K potentiometer.

Cable routing

If conduit is being used for wiring, use separate conduits for line voltage (mains), motor cables, and all interface/control wiring.

To meet the UL requirements, if conduit is being used for wiring, the enclosure openings provided for conduit connections in the field shall be closed by UL listed conduit fittings with the same type rating (Type 1) as the enclosure.

Avoid running motor cables alongside or parallel to any other wiring. If it is necessary to run motor cables with other wiring, then maintain spacing between motor cables and other wiring.

Wiring the VFD

If three or more motor cables are used, each conductor must have its own overcurrent protection.

Note: Do not wire motor leads to R+, R–. This will cause damage to the drive.

Note: Actual layout may vary slightly by frame.

Ground wiring

- Run motor cables in separate conduit.
- DO NOT RUN CONTROL WIRES in same conduit.
- Cables sized per **Appendix B.**
- Provide **dedicated** wire for low impedance ground between drive and motor. DO NOT USE conduit as ground.

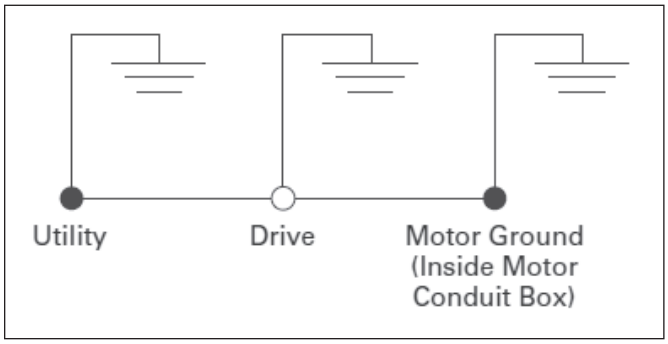

CAUTION

Improper grounding could result in damage to the motor and/or drive and could void warranty.

Checking the cable and motor insulation

1. Check the motor cable insulation as follows:
   - Disconnect the motor cable from terminals U, V, and W of the PowerXL Series drive and from the motor.
   - Measure the insulation resistance of the motor cable between each phase conductor as well as between each phase conductor and the protective ground conductor.
   - The insulation resistance must be >1M ohm.
2. Check the input power cable insulation as follows:
   - Disconnect the input power cable from terminals L1, L2, and L3 of the PowerXL Series drive and from the utility line feeder.
   - Measure the insulation resistance of the input power cable between each phase conductor as well as between each phase conductor and the protective ground conductor.
   - The insulation resistance must be >1M ohm.
3. Check the motor insulation as follows:
   - Disconnect the motor cable from the motor and open any bridging connections in the motor connection box.
   - Measure the insulation resistance of each motor winding. The measurement voltage must equal at least the motor nominal voltage but not exceed (1.1 * 2* Sqrt (2) X Vdc).
   - The insulation resistance must be >1M ohm.

EMC installation

Note: All following information is strongly recommended but is not necessary if sufficient system design and validation has been completed.

The responsibility to meet the local system EMC limit values and electromagnetic compatibility requirements is the responsibility of the end user or the system operator. This operator must also take measures to minimize or remove emissions in the environment concerned (see **Figure 8**). He must also use means to increase the interference immunity of the system devices.

In a drive system (PDS) with frequency inverters, you should take measures for electromagnetic compatibility (EMC) while doing your planning, because changes or improvements to the installation site, which are required in the installation or while mounting, are normally associated with additional higher costs.

The technology and system of a frequency inverter cause the flow of high frequency leakage current during operation. All grounding measures must therefore be implemented with low impedance connections over a large surface area.

With leakage currents greater than 3.5 mA, in accordance with VDE 0160 or EN 61800-5-1, either:

- the protective earthing conductor must have a cross-section of at least 10 mm^2 Cu;
- the protective earthing conductor must be open-circuit monitored, and the supply must be automatically disconnected in case of discontinuity of the protective earthing conductor, or;
- the second protective earthing conductor must be fitted.

For an EMC-compliant installation, we recommend the following measures:

- Installation of the frequency inverter in a metallic, electrically conducting enclosure with a good connection to earth;
- Shielded motor cables (short cable lengths);
- Ground all conductive components and housings in a drive system using as short a line as possible with the greatest possible cross-section (Cu-braid).

EMC measures in the control panel

For EMC-compatible installation, connect all metallic parts of the device and the switching cabinet together over broad surfaces and so that high-frequencies will be conducted. Mounting plates and cabinet doors should make good contact and be connected with short HF-braided cables. It is recommended to avoid using painted surfaces (anodized, chromized). An overview of all EMC measures is provided in **Figure 8.**

Install the frequency inverter as directly as possible (without spacers) on a metal plate (mounting plate).

Route input and motor cables in the switch cabinet as close to the ground potential as possible. This is because free moving cables act as antennas.

When laying HF cables (for example, shielded motor cables) or suppressed cables (for example, input supply cables, control circuit and signal cables) in parallel, a minimum clearance of 11.81 in. (300 mm) is recommended in order to prevent the radiation of electromagnetic energy. Separate cable routing is also recommended when large voltage potential differences are involved. Any necessary crossed cabling between the control signal and power cables should be implemented at right angles (90 degrees).

It is recommended to never lay control or signal cables in the same duct as power cables. Analog signal cables (measured, reference and correction values) should be shielded.

Note: The shielded cables need to be grounded according to section "Screen earth kit" to grounding.

Earthing

The ground connection (PE) in the cabinet should be connected from the input supply to a central earth point (mounting plate). All protective conductors should be routed in star formation from this earth point and all conductive components of the PDS (frequency inverter, motor reactor, motor filter, main choke) are to be connected.

Avoid ground loops when installing multiple frequency inverters in one cabinet. Make sure that all metallic devices that are to be grounded have a broad area connection with the mounting plate.

Screen earth kit

Cables that are not shielded work like antennas (sending, receiving). Make sure that any cables that may carry disruptive signals (for example, motor cables) and sensitive cables (analog signal and measurement values) are shielded apart from one another with EMC-compatible connections.

The effectiveness of the cable shield depends on a good shield connection and a low shield impedance.

It is recommended to use only shields with tinned or nickel-plated copper braiding. Braided steel shields are unsuitable.

Control and signal lines (analog, digital) should be grounded on one end, in the immediate vicinity of the supply voltage source (PES).

Installation requirements

Figure 8. EMC-compliant setup - 230 Vac, 460/480 Vac, 600 Vac.

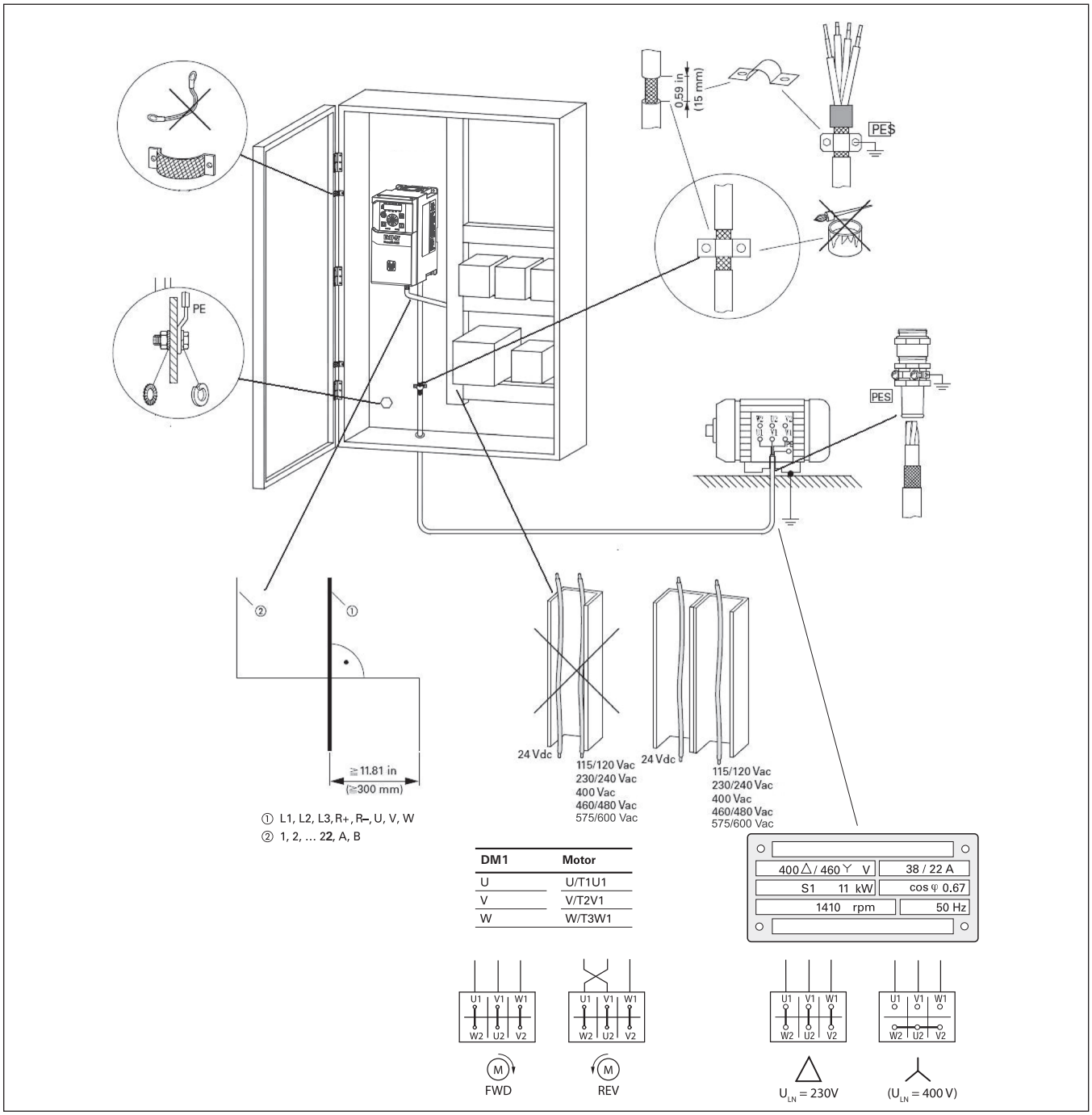

DM1	Motor
U	U/T1U1
V	V/T2V1
W	W/T3W1

Notes: ① Power cable: L1, L2, L3 and U, V, W.
② Control and signal lines: 1 to 24, fieldbus connection large-area connection of all metallic control panel components. Mounting surfaces of frequency inverter and cable shielding must be free from paint. Connect the cable shielding in the output of the frequency inverter with a large surface area contact to the ground potential (PES). Large-area cable shield contacts with motor. Large-area earth connection of all metallic parts.

International EMC protection cable requirements

The screened cables between the variable frequency drive and the motor should be as short as possible.

- Connect the screening, on both sides and across a large area (360° overlap), to the protective earth (PE). The power screening protective earth (PES) connection should be in the immediate proximity of the variable frequency drive and directly on the motor terminal box.
- Prevent the screening from becoming unbraided, e.g., by pushing the opened plastic sheath over the end of the screening or with a rubber grommet on the end of the screening. As an alternative, in addition to a broad area cable clip, you can also twist the shielding braid at the end and connect to protective ground with a cable clip. To prevent EMC disturbance, this twisted shielding connection should be made as short as possible.
- Screened three- or four-wire cable is recommended for the motor cables. The green/yellow line of a four-wire cable connects the protective ground connections from the motor and the variable frequency drive and therefore minimizes the equalizing current loads on the shielding braid.
- If there are additional subassemblies in a motor feeder (such as motor contactors, overload relays, motor reactor, sinusoidal filters or terminals), the shielding of the motor cable can be interrupted close to these subassemblies and connected to the mounting plate (PES) with a large area connection.

Unsheilded or sheilded connection cables should not be any longer than about 200 mm.

Table 24. Environment EMC levels①.

Cable Type	Category C2	Category C3	Category C4②
Line voltage/mains	1	1	1
Motor cable	3③	3	3
Control cable	4	4	4

Notes:

① For EMC C2&C3 requirements on DM1 series drive, use provided core with input&output wires going through it once. Refer to section "FR1 mounting instructions", "FR2 mounting instructions", "FR3 mounting instructions", "FR4 mounting instructions".

② For installations in IT systems, it is necessary to modify the EMC protection to EMC level C4. See the following page for the procedure.

③ 360° earthing of the shield with cable glands in motor end needed for EMC Level C2. See the following page for the procedure.

④ Control cable needs to follow the section "Screen earth kit" to grounding.

Table 25. Motor power cable EMC guidelines.

Item	Directive
Product	IEC 61800-2
Safety	UL 61800-5-1, IEC/EN 61800-5-1
EMC (at default settings)	Immunity (EMS): IEC/EN 61800-3, 2nd environment
	Radiated and Conducted emissions (EMI): IEC/EN 61800-3
	230/480V Series:
	Category C1: is possible with external filter connected to drive. Please consult factory
	Category C2: with internal filter maximum of 5 m motor cable length
	Category C3: with internal filter maximum of 25 m motor cable length

Table 26. Cable categories.

Cable category	Description (All cables are rated for the specific operating voltage)
1	Intended for fixed installation.
2	Symmetrical power cable equipped with a concentric protection wire.
3	Symmetrical power cable with compact low-impedance shield. Recommended cable transfer impedance of 1–30 MHz max. See figure below.
4	Screened cable equipped with compact low-impedance shield.

Figure 9. Cable description.

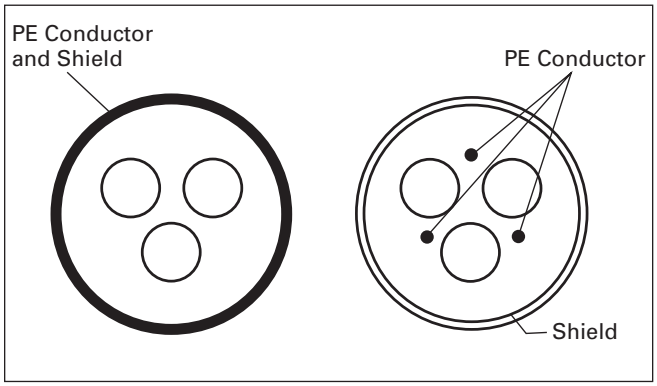

Installation in corner-grounded network and IT system

Corner grounding and IT system are allowed for all the drive types.

In these circumstances, the EMC protection class must be changed to level C4. This is done by removing the built-in EMC and MOV screws with a simple procedure described below.

WARNING

Do not perform any modifications on the AC drive when it is connected to mains.

WARNING

Electric shock hazard—risk of injuries! Carry out wiring work only if the unit is de-energized.

After disconnecting the supply, wait at least five minutes before removing the cover to allow the intermediate circuit capacitors to discharge.

WARNING

Failure to follow these instructions will result in death or serious injury.

Remove the main cover of the AC drive and remove the EMC/MOV screws depending on frame size (see **Figure 10–Figure 11**). Once the screw is removed, it can be reconnected to re-engage the EMC protection.

Figure 10. Location of the EMC/MOV screw in frame 1.

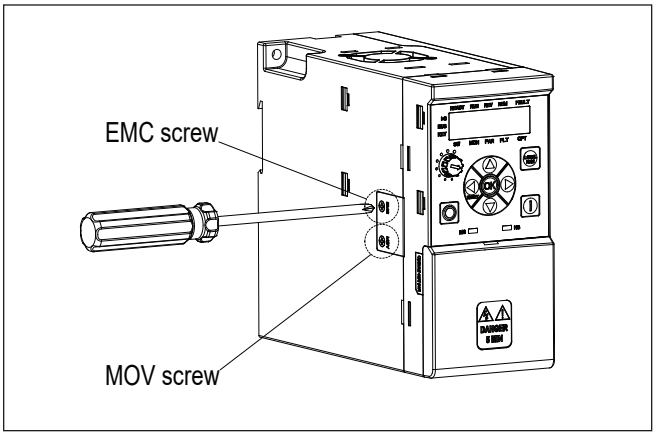

Figure 11. Location of the EMC/MOV screws in frame 2-4.

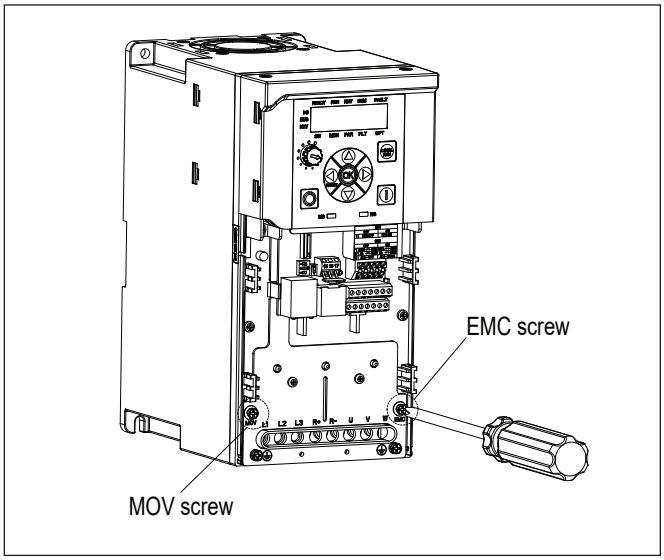

I/O connection

- Run 240 Vac and 24 Vdc control wiring in separate conduit.
- Communication wire to be twisted and shielded.

Appendix A—Technical data and specifications

Technical data

Table 27. PowerXL DM1 Series specifications.

Section	Description	Specification
Input ratings	Rated input voltage	115 V 1-phase: 100-120 Vac 1-phase 230 V 1-phase: 200-240 Vac 1-phase 230 V 3-phase: 200-240 Vac 3-phase 480 V 3-phase: 380-480 Vac 3-phase
	Voltage tolerance	-15%/10%
	Input frequency	45 Hz to 65Hz
	Input THD	>120%
	Connection to power	Once per minute or less
	Starting delay	3 s
	Short-circuit withstand rating	100 kAIC (Fuses and circuit breakers) 65 kAIC (Type E CMC) 14 kAIC (Miniature breakers) 5 kAIC (All)
	Power ride-thru	100 ms
	Logic control ride-thru	.5 s Min, 2 s typical
	Total watts loss	Typical efficiency 97.5% for 3-phase
Output ratings	Output voltage	115 V 1 phase input: 0-2*Vin 3-phase 230 V 1 phase input: 0-Vin 3-phase 230 V 3 phase input: 0-Vin 3-phase 480 V 3 phase input: 0-Vin 3-phase
	Continuous output current	IL: ambient temperature maximum 40°C, up to 60°C with derating, overload 1.1 x IL (1 min/10 min) IH: ambient temperature maximum 50°C, up to 60°C with derating, overload 1.5 x IH (1 min/10 min)
	Overload current	150% of drive rating for constant torque 110% of drive rating for variable torque
	Initial output current	200% (2 sec/20 sec)
	Output frequency	0-400 Hz (standard)
	Frequency resolution	0.01 Hz
Control characteristics	Control methods	Frequency control Speed control PM motor speed control
	Performance: V/Hz (volts per Hertz) SVC (sensorless vector) PM motor	 ±0.5% of base speed across a 30:1 speed range ±0.5% of base speed across a 60:1 speed range ±0.5% of base speed, up to a 20:1 speed range
	Switching frequency	1 kHz to 16 kHz Automatic switching frequency derating in case of overload
	Frequency reference	Analog input: resolution 0.1% (10-bit), accuracy +1% Analog output: resolution 0.1% (10-bit), accuracy +1% Panel reference: resolution 0.01 Hz
	Field weakening point	20 Hz to 400 Hz
	Acceleration time	0.1 s to 3000 s
	Deceleration time	0.1 s to 3000 s
	Braking torque	DC brake: 30% x motor rated torque (Tn) (without brake chopper) Dynamic braking (with optional brake chopper using an external brake resistor): 100% continuous maximum rating

Table 27. PowerXL DM1 Series specifications (continued).

Section	Description	Specification
Protections	Overvoltage protection	Yes
	Overvoltage trip limit	115 V 1-phase: 430 Vdc 230 V 1-phase: 430 Vdc 230 V 3-phase: 430 Vdc 480 V 3-phase: 850 Vdc
	Undervoltage protection	Yes
	Undervoltage trip limit	115 V 1-phase: 175 Vdc 230 V 1-phase: 175 Vdc 230 V 3-phase: 210 Vdc 480 V 3-phase: 390 Vdc
	Earth fault protection	Yes
	Input phase supervision	Yes
	Motor phase supervision	Yes
	Overcurrent protection	Yes
	Unit overtempurature protection	Yes
	Motor overload protection	Yes
	Motor stall protection	Yes
	Motor underload protection	Yes
	DC bus overvoltage control	Yes
	Short-circuit protection of 24V supply	No
	Surge protection	Yes (differential mode 2 kV; common mode 4 kV)
Control section	Control voltage	24 Vdc, max 100mA
	Reference voltage	10.3 Vdc max 10mA
	Digital Inputs:	
	• Quantity	4 programmable
	• Type	Positive or negative logic; 18 to 30 Vdc,
	• Maximum switching speed	1 kHz
	Relay output:	
	• Quantity	2 programmable (1 Form C relay and 1 N/O form A relay) Note: DM1 pro only. DM1 has only 1 form A relay on board
	• Specification	Switching capacity: • Resistive rating: 3.0 A @ 30 Vdc, 3.0 A @ 125 V, 3.0 A @ 240 Vac • Inductive rating: 0.5 A @ 30 Vdc, 0.5 A @ 125 V, 0.5 A @ 240 Vac
	Analog Input:	
	• Quantity	1 dipswitch selectable 0-10 Vdc or 0/4 to 20 mA
	• Specification Resolution 0-10 Vdc analog 4-20 mA analog External pot	 10-bit 100k ohm input impedance 250 ohm input impedance 1-10kohm, 2 watt minimum
	Analog Output:	
	• Quantity	1 dipswitch selectable 0-10Vdc or 4 to 20mA
	• Specification Resolution 0-10 Vdc analog 0/4-20 mA analog	 10-bit 10 mA max RL max 500 ohm
Communications	Ethernet I/P	Onboard *(DM1 Pro only)
	Modbus TCP	Onboard *(DM1 Pro only)
	BACnet I/P	Onboard *(DM1 Pro only)
	Modbus RTU	Onboard
	BACnet MSTP	Onboard *(DM1 Pro only)
	Dualport ethernet I/P	Optional *(DM1 Pro only)
	SmartWire D/T	Optional *(DM1 Pro only)
	Profibus	Optional *(DM1 Pro only)
	CANOPEN	Optional *(DM1 Pro only)

Table 27. PowerXL DM1 Series specifications (continued).

Section	Description	Specification
Environmental	Ambient operating temperature	-10°C (no frost) to +50°C, up to +60°C with derating (CT) -10°C (no frost) to +40°C, up to +60°C with derating (VT)
	Storage temperature	-40°C to +70°C
	Relative humidity	0-95% RH, noncondensing, non-corrosive
	Air quality: • Chemical vapors • Mechanical particles	Tested according to IEC 60068-2-60 Test Key: Flowing mixed gas corrosion test, method 1 (H2S [hydrogen sulfide] and SO2 [sulfur dioxide]) Designed according to: IEC 60721-3-3, unit in operation, class 3C2
	Vibration: • EN 61800-5-1 • EN 60068-2-6	Vibration test at operating status Displacement amplitude: 0.075 mm (peak) at 10 Hz to 57 Hz Maximum acceleration amplitude: 1g at 57 Hz to 150 Hz
	Shock: • EN 60068-2-27	Shock test at operating status Peak acceleration: 15 g Duration: 11 ms
	Transportation: • ISTA 1 A	Transported as a single device in a separate package, Vibartion test and drop test per ISTA 1A
	Overvoltage	Overvoltage Category III
	Pollution degree	Pollution Degree 2
	Enclosure Class	IP20 standard in entire kW/hp range NEMA 1 / UL Type 1 with accessory kit
	EMC	EN 61800-3, 2nd environment
	Altitude	100% load capacity (no derating) up to 3280 ft (1000 m) 1% derating for each 328 ft (100 m) above 3280 ft (1000 m) up to 6562 ft (2000 m) (UL listing) up to 13123 ft (4000 m) (without UL listing) If the installation site is higher than 6562 ft (2000 m) above sea level, contact your local Eaton representative for further information.
	MTBF	300,000 Hours
Standards	Safety	UL 61800-5-1, CSA C22.2 No. 274-17 and IEC/EN 61800-5-1
	EMC	EN 61800-3, 2nd environment, Category 2
	STO	Cat. 3 / PL d acc. to ISO 13849-1 SIL 2 / SIL CL 2 acc. to IEC 61800-5-2 / IEC 62061 / IEC 61508
	Electrostatic discharge	Second environment, IEC 61000-4-2, 4 kV CD or 8 kV AD, Criterion B
	Fast transient burst	Second environment, IEC 61000-4-4, 2 kV/5 kHz, Criterion B
	Approvals	CE, UL and cUL, EAC, RCM (C-Tick), RoHS, TUV (STO), FCC (Bluetooth)

Appendix B—Installation guidelines

Cable and fuse sizing

Table 28. UL cable and fuse sizes.

			Output rating		Input rating		UL application							
Input voltage	**Frame size**	**Drive catalog number**	**CT/I_H current amps**	**VT/I_L current amps**	**CT/I_H current amps**	**VT/I_L current amps**	**Recommended fuse (Class J, T, CF or CC) (max rating) 100 kAIC①**	**Recommended miniature inverse-time molded-case circuit breaker (max rating) 10/14 kAIC①**	**Recommended Type E CMC (max rating) 65 kAIC②**	**Recommended inverse-time molded-case circuit breaker (max rating) 100 kAIC (open type only for 3-phase)①**	**NEC wire size line and motor AWG**	**NEC wire size ground AWG**	**Terminal size line and motor AWG**	**Terminal size ground AWG**
100 Vac to 120 Vac 50/60 Hz 1-phase	FR1	DM1-111D6…	1.6	2.5	6.4	10	30	30	\	30	14	10	18-8	16-8
		DM1-113D0…	3	4.8	13.5	20	70	63	\	70	10	8	18-8	16-8
	FR2	DM1-114D8…	4.8	6.9	20	26.4	90	63	\	90	8	8	20-6	12-6
		DM1-116D9…	6.9	7.8	26.4	30	125	63	\	125	8	6	20-6	12-6
200 Vac to 240 Vac 50/60 Hz 1-phase	FR1	DM1-121D6…	1.6	2.5	4	6.5	15	15	\	15	14	14	18-8	16-8
		DM1-123D0…	3	4.8	8	11	30	30	\	30	14	10	18-8	16-8
		DM1-124D8…	4.8	7.8	11	17	60	63	\	60	10	8	18-8	16-8
	FR2	DM1-127D8…	7.8	11	18	23	80	63	\	80	10	8	20-6	12-6
		DM1-12011…	11	17.5	23	35	125	63	\	125	8	6	20-6	12-6
	FR3	DM1-12017…	17.5	25.3	38	49.6	200	\	\	200	6	6	20-6	8-6
200 Vac to 240 Vac 50/60 Hz 3-phase	FR1	DM1-321D6…	1.6	2.5	2.1	3.3	6	FAZ-C5/3-NA(10kA)	XTPR6P3BC1 + XTPAXLSA or PKZM0-6.3 + BK25/3-PKZ0-E	EGC3015FFG	14	14	18-8	16-10
		DM1-323D0…	3	4.8	3.9	5.8	15	FAZ-C10/3-NA(10kA)	XTPR6P3BC1 + XTPAXLSA or PKZM0-6.3 + BK25/3-PKZ0-E	EGC3015FFG	14	14	18-8	16-10
		DM1-324D8…	4.8	7.8	5.8	9.4	20	FAZ-C15/3-NA(14kA)	XTPR010BC1 + XTPAXLSA or PKZM0-10 + BK25/3-PKZ0-E	EGC3015FFG	14	12	18-8	16-10
		DM1-327D8…	7.8	11	9.4	13.2	30	FAZ-C20/3-NA(14kA)	XTPR016DC1 + XTPAXLSAD or PKZM4-16 + BK50/3-PKZ4-E	EGC3020FFG	12	10	18-8	16-10

Table 28. UL cable and fuse sizes (continued).

			Output rating		Input rating		UL application							
Input voltage	**Frame size**	**Drive catalog number**	**CT/I_H current amps**	**VT/I_L current amps**	**CT/I_H current amps**	**VT/I_L current amps**	**Recommended fuse (Class J, T, CF or CC) (max rating) 100 kAIC①**	**Recommended miniature inverse-time molded-case circuit breaker (max rating) 10/14 kAIC①**	**Recommended Type E CMC (max rating) 65 kAIC②**	**Recommended inverse-time molded-case circuit breaker (max rating) 100 kAIC (open type only for 3-phase)①**	**NEC wire size line and motor AWG**	**NEC wire size ground AWG**	**Terminal size line and motor AWG**	**Terminal size ground AWG**
200 Vac to 240 Vac 50/60 Hz 3-phase	FR2	DM1-32011…	11	17.5	12.7	20.1	40	FAZ-C30/3-NA(10kA)	XTPR025DC1 + XTPAXLSAD or PKZM4-25 + BK50/3-PKZ4-E	EGC3030FFG	10	10	20-6	12-8
		DM1-32017…	17.5	25.3	20.1	29.1	60	FAZ-C40/3-NA(10kA)	XTPR032DC1 + XTPAXLSAD or PKZM4-32 + BK50/3-PKZ4-E	EGC3045FFG	8	10	20-6	12-8
	FR3	DM1-32025…	25.3	32.2	29.1	37	70	FAZ-C50/3-NA(10kA)	XTPR040DC1 + XTPAXLSAD or PKZM4-40 + BK50/3-PKZ4-E	EGC3050FFG	8	8	20-6	10-8
	FR4	DM1-32032…	32.2	48.3	35.4	53.1	100	\	\	EGC3080FFG	4	8	20-2	8-6
		DM1-32048…	48.3	62.1	53.1	68.3	125	\	\	EGC3100FFG	3	6	20-2	8-6
380 Vac to 480 Vac 50/60 Hz 3-Phase	FR1	DM1-341D5…	1.5	2.2	1.8	2.6	6	FAZ-C4/3-NA(10kA)	XTPR6P3BC1 + XTPAXLSA or PKZM0-6.3 + BK25/3-PKZ0-E	EGC3015FFG	14	14	18-8	16-10
		DM1-342D2…	2.2	4.3	2.6	5.2	10	FAZ-C8/3-NA(10kA)	XTPR6P3BC1 + XTPAXLSA or PKZM0-6.3 + BK25/3-PKZ0-E	EGC3015FFG	14	14	18-8	16-10
		DM1-344D3…	4.3	5.6	5.2	6.7	15	FAZ-C10/3-NA(10kA)	XTPR010BC1 + XTPAXLSA or PKZM0-10 + K25/3-PKZ0-E	EGC3015FFG	14	14	18-8	16-10
		DM1-345D6…	5.6	7.6	6.7	9.1	30	FAZ-C15/3-NA(14kA)	XTPR010BC1 + XTPAXLSA or PKZM0-10 + BK25/3-PKZ0-E	EGC3015FFG	14	10	18-8	16-10
	FR2	DM1-347D6…	7.6	12	9.1	14.4	30	FAZ-C20/3-NA(14kA)	XTPR016DC1 + XTPAXLSAD or PKZM4-16 + BK50/3-PKZ4-E	EGC3020FFG	12	10	20-6	12-8
		DM1-34012…	12	16	14.4	19.2	40	FAZ-C25/3-NA(14kA)	XTPR025DC1 + XTPAXLSAD or PKZM4-25 + BK50/3-PKZ4-E	EGC3030FFG	10	10	20-6	12-8
		DM1-34016…	16	23	19.2	27.6	60	FAZ-C32/3-NA(10kA)	XTPR032DC1 + XTPAXLSAD or PKZM4-32 + BK50/3-PKZ4-E	EGC3040FFG	8	10	20-6	12-8
	FR3	DM1-34023..	23	31	26.5	35.7	70	\	XTPR040DC1 + XTPAXLSAD or PKZM4-40 + BK50/3-PKZ4-E	EGC3050FFG	8	8	20-6	10-8

Notes:
① Can be any UL listed types with the same ratings.
② Due to UL listing, only can be below Eaton types.

Table 28. UL cable and fuse sizes (continued).

			Output rating		Input rating		UL application							
Input voltage	**Frame size**	**Drive catalog number**	**CT/I_H current amps**	**VT/I_L current amps**	**CT/I_H current amps**	**VT/I_L current amps**	**Recommended fuse (Class J, T, CF or CC) (max rating) 100 kAIC①**	**Recommended miniature inverse-time molded-case circuit breaker (max rating) 10/14 kAIC①**	**Recommended Type E CMC (max rating) 65 kAIC②**	**Recommended inverse-time molded-case circuit breaker (max rating) 100 kAIC (open type only for 3-phase)①**	**NEC wire size line and motor AWG**	**NEC wire size ground AWG**	**Terminal size line and motor AWG**	**Terminal size ground AWG**
380 Vac to 480 Vac 50/60 Hz 3-Phase (cont.)	FR4	DM1-34031…	31	38	35.7	43.7	70	\	XTPR050DC1 + XTPAXLSAD or PKZM4-50 + BK50/3-PKZ4-E	EGC3070FFG	6	8	20-2	8-6
		DM1-34038…	38	46	43.7	52.9	80	\	XTPR058DC1 + XTPAXLSAD or PKZM4-58 + BK50/3-PKZ4-E	EGC3080FFG	4	8	20-2	8-6
525 Vac to 600 Vac 50/60 Hz 3-Phase	FR2	DM1-354D5…												
		DM1-357D5…												
		DM1-35010…												
	FR3	DM1-35013…												
	FR4	DM1-35018…												
		DM1-35022…												

Notes:
① Can be any UL listed types with the same ratings.
② Due to UL listing, only can be below Eaton types.

Table 29. IEC cable and fuse sizes (continued).

			Output rating		Input rating		IEC application							
Input voltage	**Frame size**	**Drive catalog number**	**CT/I_H current amps**	**VT/I_L current amps**	**CT/I_H current amps**	**VT/I_L current amps**	**Recom mended fuse (max rating) 100 kAIC**	**Recom-mended miniature circuit breaker (max rating) 10/14 kAIC**	**Recom-mended Type E CMC (max. rating) 65 kAIC**	**Recom-mended circuit breaker (max rating) 100 kAIC (open type only for 3-phase)**	**IEC cable size line and motor mm²**	**IEC cable size ground mm²**	**Term-inal size line and motor mm²**	**Term-inal size ground mm²**
100 Vac to 120 Vac 50/60 Hz 1-phase	FR1	DM1-111D6…	1.6	2.5	6.4	10	30	30	\	30	2.5	2.5	0.2-6	1-6
		DM1-113D0…	3	4.8	13.5	20	70	63	\	70	6	6	0.2-6	1-6
	FR2	DM1-114D8…	4.8	6.9	20	26.4	90	63	\	90	10	10	0.5-16	1-10
		DM1-116D9…	6.9	7.8	26.4	30	125	63	\	125	10	10	0.5-16	1-10
200 Vac to 240 Vac 50/60 Hz 1-phase	FR1	DM1-121D6…	1.6	2.5	4	6.5	15	15	\	15	2.5	2.5	0.2-6	1-6
		DM1-123D0…	3	4.8	8	11	30	30	\	30	2.5	2.5	0.2-6	1-6
		DM1-124D8…	4.8	7.8	11	17	60	63	\	60	6	6	0.2-6	1-6
	FR2	DM1-127D8…	7.8	11	18	23	80	63	\	80	6	6	0.5-16	1-10
		DM1-12011…	11	17.5	23	35	125	63	\	125	10	10	0.5-16	1-10
	FR3	DM1-12017…	17.5	25.3	38	49.6	200	\	\	200	16	16	0.5-16	1.5-6
200 Vac to 240 Vac 50/60 Hz 3-phase	FR1	DM1-321D6…	1.6	2.5	2.1	3.3	6	5	6.3	15	2.5	2.5	0.2-6	1.5-6
		DM1-323D0…	3	4.8	3.9	5.8	15	10	6.3	15	2.5	2.5	0.2-6	1.5-6
		DM1-324D8…	4.8	7.8	5.8	9.4	20	15	10	15	2.5	2.5	0.2-6	1.5-6
		DM1-327D8…	7.8	11	9.4	13.2	30	20	16	20	4	4	0.2-6	4-10
	FR2	DM1-32011…	11	17.5	12.7	20.1	40	30	25	30	6	6	0.5-16	4-10
		DM1-32017…	17.5	25.3	20.1	29.1	60	40	32	45	10	10	0.5-16	6-10
	FR3	DM1-32025…	25.3	32.2	29.1	37	70	50	40	50	10	10	0.5-16	10-16
	FR4	DM1-32032…	32.2	48.3	35.4	53.1	100	\	\	80	25	16	0.5-35	10-16
		DM1-32048…	48.3	62.1	53.1	68.3	125	\	\	100	35	16	0.5-35	10-16

Table 29. IEC cable and fuse sizes (continued).

			Output rating		Input rating		IEC application							
Input voltage	**Frame size**	**Drive catalog number**	**CT/I_H current amps**	**VT/I_L current amps**	**CT/I_H current amps**	**VT/I_L current amps**	**Recom mended fuse (max rating) 100 kAIC**	**Recom-mended miniature circuit breaker (max rating) 10/14 kAIC**	**Recom-mended Type E CMC (max. rating) 65 kAIC**	**Recom-mended circuit breaker (max rating) 100 kAIC (open type only for 3-phase)**	**IEC cable size line and motor mm²**	**IEC cable size ground mm²**	**Term-inal size line and motor mm²**	**Term-inal size ground mm²**
380 Vac to 480 Vac 50/60 Hz 3-Phase	FR1	DM1-341D5…	1.5	2.2	1.8	2.6	6	4	6.3	15	2.5	2.5	0.2-6	1.5-6
		DM1-342D2…	2.2	4.3	2.6	5.2	10	8	6.3	15	2.5	2.5	0.2-6	1.5-6
		DM1-344D3…	4.3	5.6	5.2	6.7	15	10	10	15	2.5	2.5	0.2-6	1.5-6
		DM1-345D6…	5.6	7.6	6.7	9.1	30	15	10	15	2.5	2.5	0.2-6	1.5-6
	FR2	DM1-347D6…	7.6	12	9.1	14.4	30	20	16	20	4	4	0.5-16	4-10
		DM1-34012…	12	16	14.4	19.2	40	25	25	30	6	6	0.5-16	4-10
		DM1-34016…	16	23	19.2	27.6	60	32	32	40	10	10	0.5-16	4-10
	FR3	DM1-34023..	23	31	26.5	35.7	70	\	40	50	10	10	0.5-16	6-10
	FR4	DM1-34031…	31	38	35.7	43.7	70	\	50	70	16	16	0.5-35	10-16
		DM1-34038…	38	46	43.7	52.9	80	\	58	80	25	16	0.5-35	10-16
525 Vac to 600 Vac 50/60 Hz 3-phase	FR2	DM1-354D5…	4.5	7.5										
		DM1-357D5…	7.5	10										
		DM1-35010…	10	13.5										
	FR3	DM1-35013…	13.5	18										
	FR4	DM1-35018…	18	22										
		DM1-35022…	22	27										

Temperature deratings

When using the PowerXL drives at elevated temperatures, derating is required to size the drive and maintain proper cooling. The following procedures and tables describe the process of derating and choosing the correct drive.

Procedure

Certain operating parameters and conditions are required for correct derating. These are: voltage, torque application (variable or constant), operating temperature, enclosure rating, switching frequency, required amperage.

Follow the below steps to correctly de-rate the PowerXL drives.

1. Find the derating table (Table 30–Table 31) for the voltage and torque application (ex. 480 V, variable torque = 3HP).
2. Within the table, find the sections of rows for the application temperature and column for the switching frequency (ex. 50°C section, 4 kHz column).
3. Look at all the frame sizes and find the frame size for your required amperage.
4. Take the derating % for that frame size and go to the catalog tables (Table 2–Table 8). De-rate each option within that frame size to find the correct drive (ex.) the derating percentage is 73.7%).

Table 30. Temperature derating (VT).

			Maximum rated current amps, (percentage of rated current)															
			Switching frequency															
Input voltage	**Frame size**	**Temp (°C)**	**1 kHz**	**2 kHz**	**3 kHz**	**4 kHz**	**5 kHz**	**6 kHz**	**7 kHz**	**8 kHz**	**9 kHz**	**10 kHz**	**11 kHz**	**12 kHz**	**13 kHz**	**14 kHz**	**15 kHz**	**16 kHz**
100 Vac to 120 Vac 50/60 Hz 1-phase	FR1	40 °C	4.8 A (100%)	4.8 A (100%)	4.8 A (100%)	4.8 A (100%)	4.8 A (100%)	4.8 A (100%)	4.8 A (100%)	4.8 A (100%)	4.8 A (100%)	4.8 A (100%)	4.8 A (100%)	4.8 A (100%)	4.8 A (100%)	4.8 A (100%)	4.8 A (100%)	4.8 A (100%)
		50 °C	4.8 A (100%)	4.8 A (100%)	4.8 A (100%)	4.8 A (100%)	4.8 A (100%)	4.8 A (100%)	4.8 A (100%)	4.8 A (100%)	4.8 A (100%)	4.8 A (100%)	4.8 A (100%)	4.8 A (100%)	4.73 A (98.44%)	4.65 A (96.88%)	4.58 A (95.31%)	4.5 A (93.75%)
		60 °C	4 A (83.33%)	4 A (83.33%)	4 A (83.33%)	4 A (83.33%)	4 A (83.33%)	4 A (83.33%)	4 A (83.33%)	4 A (83.33%)	3.9 A (81.25%)	3.8 A (79.17%)	3.7 A (77.08%)	3.6 A (75%)	3.5 A (72.92%)	3.4 A (70.83%)	3.3 A (68.75%)	3.2 A (66.67%)
	FR2	40 °C	7.8 A (100%)	7.8 A (100%)	7.8 A (100%)	7.8 A (100%)	7.8 A (100%)	7.8 A (100%)	7.8 A (100%)	7.8 A (100%)	7.8 A (100%)	7.8 A (100%)	7.8 A (100%)	7.8 A (100%)	7.8 A (100%)	7.8 A (100%)	7.8 A (100%)	7.8 A (100%)
		50 °C	7.8 A (100%)	7.8 A (100%)	7.8 A (100%)	7.8 A (100%)	7.8 A (100%)	7.8 A (100%)	7.8 A (100%)	7.8 A (100%)	7.8 A (100%)	7.8 A (100%)	7.8 A (100%)	7.8 A (100%)	7.8 A (100%)	7.8 A (100%)	7.8 A (100%)	7.8 A (100%)
		60 °C	7.8 A (100%)	7.8 A (100%)	7.8 A (100%)	7.8 A (100%)	7.8 A (100%)	7.8 A (100%)	7.8 A (100%)	7.8 A (100%)	7.8 A (100%)	7.8 A (100%)	7.8 A (100%)	7.8 A (100%)	7.5 A (96.15%)	7.2 A (92.31%)	6.9 A (88.46%)	6.6 A (84.62%)
200 Vac to 240 Vac 50/60 Hz 1-phase	FR1	40 °C	7.8 A (100%)	7.8 A (100%)	7.8 A (100%)	7.8 A (100%)	7.8 A (100%)	7.8 A (100%)	7.8 A (100%)	7.8 A (100%)	7.8 A (100%)	7.8 A (100%)	7.8 A (100%)	7.8 A (100%)	7.55 A (96.79%)	7.3 A (93.59%)	7.05 A (90.38%)	6.8 A (87.18%)
		50 °C	7.8 A (100%)	7.8 A (100%)	7.8 A (100%)	7.8 A (100%)	7.8 A (100%)	7.8 A (100%)	7.8 A (100%)	7.8 A (100%)	7.55 A (96.79%)	7.3 A (93.59%)	7.05 A (90.38%)	6.8 A (87.18%)	6.55 A (83.97%)	6.3 A (80.77%)	6.05 A (77.56%)	5.8 A (74.36%)
		60 °C	6.8 A (87.18%)	6.8 A (87.18%)	6.8 A (87.18%)	6.8 A (87.18%)	6.63 A (85.04%)	6.47 A (82.91%)	6.3 A (80.77%)	6.13 A (78.63%)	5.97 A (76.5%)	5.8 A (74.36%)	5.63 A (72.22%)	5.47 A (70.09%)	5.3 A (67.95%)	5.13 A (65.81%)	4.97 A (63.68%)	4.8 A (61.54%)
	FR2	40 °C	17.5 A (100%)	17.5 A (100%)	17.5 A (100%)	17.5 A (100%)	17 A (97.14%)	16.5 A (94.29%)	16 A (91.43%)	15.5 A (88.57%)	15 A (85.71%)	14.5 A (82.86%)	14 A (80%)	13.5 A (77.14%)	13 A (74.29%)	12.5 A (71.43%)	12 A (68.57%)	11.5 A (65.71%)
		50 °C	15 A (85.71%)	15 A (85.71%)	15 A (85.71%)	15 A (85.71%)	14.63 A (83.57%)	14.25 A (81.43%)	13.88 A (79.29%)	13.5 A (77.14%)	13.13 A (75%)	12.75 A (72.86%)	12.38 A (70.71%)	12 A (68.57%)	11.63 A (66.43%)	11.25 A (64.29%)	10.88 A (62.14%)	10.5 A (60%)
		60 °C	13 A (74.29%)	13 A (74.29%)	13 A (74.29%)	13 A (74.29%)	12.63 A (72.14%)	12.25 A (70%)	11.88 A (67.86%)	11.5 A (65.71%)	11.1 3A (63.57%)	10.75 A (61.43%)	10.38 A (59.29%)	10 A (57.14%)	9.63 A (55%)	9.25 A (52.86%)	8.88 A (50.71%)	8.5 A (48.57%)
	FR3	40 °C	25.3 A (100%)	25.3 A (100%)	25.3 A (100%)	25.3 A (100%)	25.3 A (100%)	25.3 A (100%)	25.3 A (100%)	25.3 A (100%)	24.8 A (98.02%)	24.3 A (96.05%)	23.8 A (94.07%)	23.3 A (92.09%)	22.8 A (90.12%)	22.3 A (88.14%)	21.8 A (86.17%)	21.3 A (84.19%)
		50 °C	25.3 A (100%)	25.3 A (100%)	25.3 A (100%)	25.3 A (100%)	24.68 A (97.53%)	24.05 A (95.06%)	23.43 A (92.59%)	22.8 A (90.12%)	22.18 A (87.65%)	21.55 A (85.18%)	20.93 A (82.71%)	20.3 A (80.24%)	19.68 A (77.77%)	19.05 A (75.3%)	18.43 A (72.83%)	17.8 A (70.36%)
		60 °C	23 A (90.91%)	23 A (90.91%)	23 A (90.91%)	23 A (90.91%)	22.08 A (87.29%)	21.17 A (83.66%)	20.25 A (80.04%)	19.33 A (76.42%)	18.42 A (72.79%)	17.5 A (69.17%)	16.58 A (65.55%)	15.67 A (61.92%)	14.75 A (58.3%)	13.83 A (54.68%)	12.92 A (51.05%)	12 A (47.43%)
200 Vac to 240 Vac 50/60 Hz 3-phase	FR1	40 °C	11.0 (100.0%)	11.0 (100.0%)	11.0 (100.0%)	11.0 (100.0%)	10.8 (98.0%)	10.6 (95.9%)	10.3 (93.9%)	10.1 (91.8%)	9.9 (89.8%)	9.7 (87.7%)	9.4 (85.7%)	9.2 (83.6%)	9.0 (81.6%)	8.8 (79.5%)	8.5 (77.5%)	8.3 (75.5%)
		50 °C	7.8 (70.9%)	7.8 (70.9%)	7.8 (70.9%)	7.8 (70.9%)	7.6 (68.9%)	7.4 (66.8%)	7.1 (64.8%)	6.9 (62.7%)	6.7 (60.7%)	6.5 (58.6%)	6.2 (56.6%)	6.0 (54.5%)	5.8 (52.5%)	5.6 (50.5%)	5.3 (48.4%)	5.1 (46.4%)
		60 °C	7.5 (68.2%)	7.5 (68.2%)	7.5 (68.2%)	7.5 (68.2%)	7.3 (66.1%)	7.1 (64.1%)	6.8 (62.0%)	6.6 (60.0%)	6.4 (58.0%)	6.2 (55.9%)	5.9 (53.9%)	5.7 (51.8%)	5.5 (49.8%)	5.3 (47.7%)	5.0 (45.7%)	4.8 (43.6%)
	FR2	40 °C	25.3 (100.0%)	25.3 (100.0%)	25.3 (100.0%)	25.3 (100.0%)	24.6 (97.0%)	23.8 (94.1%)	23.1 (91.1%)	22.3 (88.1%)	21.6 (85.2%)	20.8 (82.2%)	20.1 (79.2%)	19.3 (76.3%)	18.6 (73.3%)	17.8 (70.4%)	17.1 (67.4%)	16.3 (64.4%)
		50 °C	17.5 (69.2%)	17.5 (69.2%)	17.5 (69.2%)	17.5 (69.2%)	17.0 (67.2%)	16.5 (65.2%)	16.0 (63.2%)	15.5 (61.3%)	15.0 (59.3%)	14.5 (57.3%)	14.0 (55.3%)	13.5 (53.4%)	13.0 (51.4%)	12.5 (49.4%)	12.0 (47.4%)	11.5 (45.5%)
		60 °C	15.0 (59.3%)	15.0 (59.3%)	15.0 (59.3%)	15.0 (59.3%)	14.5 (57.3%)	14.0 (55.3%)	13.5 (53.4%)	13.0 (51.4%)	12.5 (49.4%)	12.0 (47.4%)	11.5 (45.5%)	11.0 (43.5%)	10.5 (41.5%)	10.0 (39.5%)	9.5 (37.5%)	9.0 (35.6%)
	FR3	40 °C	32.2 (100.0%)	32.2 (100.0%)	32.2 (100.0%)	32.2 (100.0%)	31.5 (97.7%)	30.8 (95.5%)	30.0 (93.2%)	29.3 (91.0%)	28.6 (88.7%)	27.9 (86.5%)	27.1 (84.2%)	26.4 (82.0%)	25.7 (79.7%)	25.0 (77.5%)	24.2 (75.2%)	23.5 (73.0%)
		50 °C	25.3 (78.6%)	25.3 (78.6%)	25.3 (78.6%)	25.3 (78.6%)	24.5 (76.2%)	23.8 (73.8%)	23.0 (71.4%)	22.2 (68.9%)	21.4 (66.5%)	20.7 (64.1%)	19.9 (61.7%)	19.1 (59.3%)	18.3 (56.9%)	17.6 (54.5%)	16.8 (52.1%)	16.0 (49.7%)
		60 °C	21.0 (65.2%)	21.0 (65.2%)	21.0 (65.2%)	21.0 (65.2%)	20.3 (62.9%)	19.5 (60.6%)	18.8 (58.2%)	18.0 (55.9%)	17.3 (53.6%)	16.5 (51.2%)	15.8 (48.9%)	15.0 (46.6%)	14.3 (44.3%)	13.5 (41.9%)	12.8 (39.6%)	12.0 (37.3%)
	FR4	40 °C	62.1 (100.0%)	62.1 (100.0%)	62.1 (100.0%)	62.1 (100.0%)	60.3 (97.1%)	58.6 (94.3%)	56.8 (91.4%)	55.0 (88.6%)	53.2 (85.7%)	51.5 (82.9%)	49.7 (80.0%)	47.9 (77.1%)	46.1 (74.3%)	44.4 (71.4%)	42.6 (68.6%)	40.8 (65.7%)
		50 °C	48.3 (77.8%)	48.3 (77.8%)	48.3 (77.8%)	48.3 (77.8%)	46.7 (75.2%)	45.2 (72.7%)	43.6 (70.2%)	42.0 (67.6%)	40.4 (65.1%)	38.9 (62.6%)	37.3 (60.0%)	35.7 (57.5%)	34.1 (55.0%)	32.6 (52.4%)	31.0 (49.9%)	29.4 (47.3%)
		60 °C	38.0 (61.2%)	38.0 (61.2%)	38.0 (61.2%)	38.0 (61.2%)	36.8 (59.2%)	35.5 (57.2%)	34.3 (55.2%)	33.0 (53.1%)	31.8 (51.1%)	30.5 (49.1%)	29.3 (47.1%)	28.0 (45.1%)	26.8 (43.1%)	25.5 (41.1%)	24.3 (39.0%)	23.0 (37.0%)

Table 30. Temperature derating (VT) (continued).

			Maximum rated current amps, (percentage of rated current)															
			Switching frequency															
Input voltage	**Frame size**	**Temp (°C)**	**1 kHz**	**2 kHz**	**3 kHz**	**4 kHz**	**5 kHz**	**6 kHz**	**7 kHz**	**8 kHz**	**9 kHz**	**10 kHz**	**11 kHz**	**12 kHz**	**13 kHz**	**14 kHz**	**15 kHz**	**16 kHz**
380 Vac to 480 Vac 50/60 Hz 3-phase	FR1	40 °C	7.6 (100.0%)	7.6 (100.0%)	7.6 (100.0%)	7.6 (100.0%)	7.3 (95.7%)	7.0 (91.4%)	6.6 (87.2%)	6.3 (82.9%)	6.0 (78.6%)	5.7 (74.3%)	5.3 (70.1%)	5.0 (65.8%)	4.7 (61.5%)	4.4 (57.2%)	4.0 (53.0%)	3.7 (48.7%)
		50 °C	5.6 (73.7%)	5.6 (73.7%)	5.6 (73.7%)	5.6 (73.7%)	5.4 (70.4%)	5.1 (67.1%)	4.9 (63.8%)	4.6 (60.5%)	4.4 (57.2%)	4.1 (53.9%)	3.9 (50.7%)	3.6 (47.4%)	3.4 (44.1%)	3.1 (40.8%)	2.9 (37.5%)	2.6 (34.2%)
		60 °C	4.6 (60.5%)	4.6 (60.5%)	4.6 (60.5%)	4.6 (60.5%)	4.4 (57.2%)	4.1 (53.9%)	3.9 (50.7%)	3.6 (47.4%)	3.4 (44.1%)	3.1 (40.8%)	2.9 (37.5%)	2.6 (34.2%)	2.4 (30.9%)	2.1 (27.6%)	1.9 (24.3%)	1.6 (21.1%)
	FR2	40 °C	23.0 (100.0%)	23.0 (100.0%)	23.0 (100.0%)	23.0 (100.0%)	21.6 (94.0%)	20.3 (88.0%)	18.9 (82.1%)	17.5 (76.1%)	16.1 (70.1%)	14.8 (64.1%)	13.4 (58.2%)	12.0 (52.2%)	10.6 (46.2%)	9.3 (40.2%)	7.9 (34.2%)	6.5 (28.3%)
		50 °C	16.0 (69.6%)	16.0 (69.6%)	16.0 (69.6%)	16.0 (69.6%)	15.1 (65.8%)	14.3 (62.0%)	13.4 (58.2%)	12.5 (54.3%)	11.6 (50.5%)	10.8 (46.7%)	9.9 (42.9%)	9.0 (39.1%)	8.1 (35.3%)	7.3 (31.5%)	6.4 (27.7%)	5.5 (23.9%)
		60 °C	14.0 (60.9%)	14.0 (60.9%)	14.0 (60.9%)	14.0 (60.9%)	13.1 (57.1%)	12.3 (53.3%)	11.4 (49.5%)	10.5 (45.7%)	9.6 (41.8%)	8.8 (38.0%)	7.9 (34.2%)	7.0 (30.4%)	6.1 (26.6%)	5.3 (22.8%)	4.4 (19.0%)	3.5 (15.2%)
	FR3	40 °C	31.0 (100.0%)	31.0 (100.0%)	31.0 (100.0%)	31.0 (100.0%)	29.3 (94.4%)	27.5 (88.7%)	25.8 (83.1%)	24.0 (77.4%)	22.3 (71.8%)	20.5 (66.1%)	18.8 (60.5%)	17.0 (54.8%)	15.3 (49.2%)	13.5 (43.5%)	11.8 (37.9%)	10.0 (32.3%)
		50 °C	23.0 (74.2%)	23.0 (74.2%)	23.0 (74.2%)	23.0 (74.2%)	21.8 (70.2%)	20.5 (66.1%)	19.3 (62.1%)	18.0 (58.1%)	16.8 (54.0%)	15.5 (50.0%)	14.3 (46.0%)	13.0 (41.9%)	11.8 (37.9%)	10.5 (33.9%)	9.3 (29.8%)	8.0 (25.8%)
		60 °C	21.0 (67.7%)	21.0 (67.7%)	21.0 (67.7%)	21.0 (67.7%)	19.8 (63.7%)	18.5 (59.7%)	17.3 (55.6%)	16.0 (51.6%)	14.8 (47.6%)	13.5 (43.5%)	12.3 (39.5%)	11.0 (35.5%)	9.8 (31.5%)	8.5 (27.4%)	7.3 (23.4%)	6.0 (19.4%)
	FR4	40 °C	46.0 100.0%)	46.0 (100.0%)	46.0 (100.0%)	46.0 (100.0%)	43.7 (94.9%)	41.4 (89.9%)	39.0 (84.8%)	36.7 (79.8%)	34.4 (74.7%)	32.1 (69.7%)	29.7 (64.6%)	27.4 (59.6%)	25.1 (54.5%)	22.8 (49.5%)	20.4 (44.4%)	18.1 (39.3%)
		50 °C	38.0 (82.6%)	38.0 (82.6%)	38.0 (82.6%)	38.0 (82.6%)	36.0 (78.3%)	34.0 (73.9%)	32.0 (69.6%)	30.0 (65.2%)	28.0 (60.9%)	26.0 (56.5%)	24.0 (52.2%)	22.0 (47.8%)	20.0 (43.5%)	18.0 (39.1%)	16.0 (34.8%)	14.0 (30.4%)
		60 °C	30.0 (65.2%)	30.0 (65.2%)	30.0 (65.2%)	30.0 (65.2%)	28.4 (61.7%)	26.8 (58.2%)	25.1 (54.6%)	23.5 (51.1%)	21.9 (47.6%)	20.3 (44.0%)	18.6 (40.5%)	17.0 (37.0%)	15.4 (33.4%)	13.8 (29.9%)	12.1 (26.4%)	10.5 (22.8%)
525 Vac to 600 Vac 50/60 Hz 3-phase	FR2	40 °C																
		50 °C																
		60 °C																
	FR3	40 °C																
		50 °C																
		60 °C																
	FR4	40 °C																
		50 °C																
		60 °C																

Table 31. Temperature derating (CT).

			Maximum rated current amps, (percentage of rated current)															
			Switching frequency															
Input voltage	Frame size	Temp (°C)	1 kHz	2 kHz	3 kHz	4 kHz	5 kHz	6 kHz	7 kHz	8 kHz	9 kHz	10 kHz	11 kHz	12 kHz	13 kHz	14 kHz	15 kHz	16 kHz
100 Vac to 120 Vac 50/60 Hz 1-phase	FR1	40 °C	3 A (100%)	3 A (100%)	3 A (100%)	3 A (100%)	3 A (100%)	3 A (100%)	3 A (100%)	3 A (100%)	3 A (100%)	3 A (100%)	3 A (100%)	3 A (100%)	3 A (100%)	3 A (100%)	3 A (100%)	3 A (100%)
		50 °C	3 A (100%)	3 A (100%)	3 A (100%)	3 A (100%)	3 A (100%)	3 A (100%)	3 A (100%)	3 A (100%)	3 A (100%)	3 A (100%)	3 A (100%)	3 A (100%)	3 A (100%)	3 A (100%)	3 A (100%)	3 A (100%)
		60 °C	3 A (100%)	3 A (100%)	3 A (100%)	3 A (100%)	3 A (100%)	3 A (100%)	3 A (100%)	3 A (100%)	3 A (100%)	3 A (100%)	3 A (100%)	3 A (100%)	3 A (100%)	3 A (100%)	3 A (100%)	3 A (100%)
	FR2	40 °C	6.9 A (100%)	6.9 A (100%)	6.9 A (100%)	6.9 A (100%)	6.9 A (100%)	6.9 A (100%)	6.9 A (100%)	6.9 A (100%)	6.9 A (100%)	6.9 A (100%)	6.9 A (100%)	6.9 A (100%)	6.9 A (100%)	6.9 A (100%)	6.9 A (100%)	6.9 A (100%)
		50 °C	6.9 A (100%)	6.9 A (100%)	6.9 A (100%)	6.9 A (100%)	6.9 A (100%)	6.9 A (100%)	6.9 A (100%)	6.9 A (100%)	6.9 A (100%)	6.9 A (100%)	6.9 A (100%)	6.9 A (100%)	6.9 A (100%)	6.9 A (100%)	6.9 A (100%)	6.9 A (100%)
		60 °C	6.9 A (100%)	6.9 A (100%)	6.9 A (100%)	6.9 A (100%)	6.9 A (100%)	6.9 A (100%)	6.9 A (100%)	6.9 A (100%)	6.9 A (100%)	6.9 A (100%)	6.9 A (100%)	6.9 A (100%)	6.83 A (98.91%)	6.75 A (97.83%)	6.68 A (96.74%)	6.6 A (95.65%)
200 Vac to 240 Vac 50/60 Hz 1-phase	FR1	40 °C	4.8 A (100%)	4.8 A (100%)	4.8 A (100%)	4.8 A (100%)	4.8 A (100%)	4.8 A (100%)	4.8 A (100%)	4.8 A (100%)	4.8 A (100%)	4.8 A (100%)	4.8 A (100%)	4.8 A (100%)	4.8 A (100%)	4.8 A (100%)	4.8 A (100%)	4.8 A (100%)
		50 °C	4.8 A (100%)	4.8 A (100%)	4.8 A (100%)	4.8 A (100%)	4.8 A (100%)	4.8 A (100%)	4.8 A (100%)	4.8 A (100%)	4.8 A (100%)	4.8 A (100%)	4.8 A (100%)	4.8 A (100%)	4.8 A (100%)	4.8 A (100%)	4.8 A (100%)	4.8 A (100%)
		60 °C	4.8 A (100%)	4.8 A (100%)	4.8 A (100%)	4.8 A (100%)	4.8 A (100%)	4.8 A (100%)	4.8 A (100%)	4.8 A (100%)	4.8 A (100%)	4.8 A (100%)	4.8 A (100%)	4.8 A (100%)	4.8 A (100%)	4.8 A (100%)	4.8 A (100%)	4.8 A (100%)
	FR2	40 °C	11 A (100%)	11 A (100%)	11 A (100%)	11 A (100%)	11 A (100%)	11 A (100%)	11 A (100%)	11 A (100%)	10.75 A (97.73%)	10.5 A (95.45%)	10.25 A (93.18%)	10 A (90.91%)	9.75 A (88.64%)	9.5 A (86.36%)	9.25 A (84.09%)	9 A (81.82%)
		50 °C	11 A (100%)	11 A (100%)	11 A (100%)	11 A (100%)	10.75 A (97.73%)	10.5 A (95.45%)	10.25 A (93.18%)	10 A (90.91%)	9.75 A (88.64%)	9.5 A (86.36%)	9.25 A (84.09%)	9 A (81.82%)	8.75 A (79.55%)	8.5 A (77.27%)	8.25 A (75%)	8 A (72.73%)
		60 °C	10 A (90.91%)	10 A (90.91%)	10 A (90.91%)	10 A (90.91%)	9.75 A (88.64%)	9.5 A (86.36%)	9.25 A (84.09%)	9 A (81.82%)	8.75 A (79.55%)	8.5 A (77.27%)	8.25 A (75%)	8 A (72.73%)	7.75 A (70.45%)	7.5 A (68.18%)	7.25 A (65.91%)	7 A (63.64%)
	FR3	40 °C	17.5 A (100%)	17.5 A (100%)	17.5 A (100%)	17.5 A (100%)	17.5 A (100%)	17.5 A (100%)	17.5 A (100%)	17.5 A (100%)	17.38 A (99.29%)	17.25 A (98.57%)	17.13 A (97.86%)	17 A (97.14%)	16.88 A (96.43%)	16.75 A (95.71%)	16.63 A (95%)	16.5 A (94.29%)
		50 °C	17.5 A (100%)	17.5 A (100%)	17.5 A (100%)	17.5 A (100%)	17.5 A (100%)	17.5 A (100%)	17.5 A (100%)	17.5 A (100%)	17 A (97.14%)	16.5 A (94.29%)	16 A (91.43%)	15.5 A (88.57%)	15 A (85.71%)	14.5 A (82.86%)	14 A (80%)	3.5 A (77.14%)
		60 °C	17.5 A (100%)	17.5 A (100%)	17.5 A (100%)	17.5 A (100%)	16.88 A (96.43%)	16.25 A (92.86%)	15.63 A (89.29%)	15 A (85.71%)	14.38 A (82.14%)	13.75 A (78.57%)	13.13 A (75%)	12.5 A (71.43%)	11.88 A (67.86%)	11.25 A (64.29%)	10.63 A (60.71%)	10 A (57.14%)
200 Vac to 240 Vac 50/60 Hz 3-phase	FR1	40 °C	7.8 (100.0%)	7.8 (100.0%)	7.8 (100.0%)	7.8 (100.0%)	7.8 (100.0%)	7.8 (100.0%)	7.8 (100.0%)	7.8 (100.0%)	7.7 (98.1%)	7.5 (96.2%)	7.4 (94.2%)	7.2 (92.3%)	7.1 (90.4%)	6.9 (88.5%)	6.8 (86.5%)	6.6 (84.6%)
		50 °C	7.8 (100.0%)	7.8 (100.0%)	7.8 (100.0%)	7.8 (100.0%)	7.6 (97.1%)	7.4 (94.2%)	7.1 (91.3%)	6.9 (88.5%)	6.7 (85.6%)	6.5 (82.7%)	6.2 (79.8%)	6.0 (76.9%)	5.8 (74.0%)	5.6 (71.2%)	5.3 (68.3%)	5.1 (65.4%)
		60 °C	7.5 (96.2%)	7.5 (96.2%)	7.5 (96.2%)	7.5 (96.2%)	7.3 (93.3%)	7.1 (90.4%)	6.8 (87.5%)	6.6 (84.6%)	6.4 (81.7%)	6.2 (78.8%)	5.9 (76.0%)	5.7 (73.1%)	5.5 (70.2%)	5.3 (67.3%)	5.0 (64.4%)	4.8 (61.5%)
	FR2	40 °C	17.5 (100.0%)	17.5 (100.0%)	17.5 (100.0%)	17.5 (100.0%)	17.5 (100.0%)	17.5 (100.0%)	17.5 (100.0%)	17.5 (100.0%)	17.0 (97.1%)	16.5 (94.3%)	16.0 (91.4%)	15.5 (88.6%)	15.0 (85.7%)	14.5 (82.9%)	14.0 (80.0%)	13.5 (77.1%)
		50 °C	17.5 (100.0%)	17.5 (100.0%)	17.5 (100.0%)	17.5 (100.0%)	17.0 (97.1%)	16.5 (94.3%)	16.0 (91.4%)	15.5 (88.6%)	15.0 (85.7%)	14.5 (82.9%)	14.0 (80.0%)	13.5 (77.1%)	13.0 (74.3%)	12.5 (71.4%)	12.0 (68.6%)	11.5 (65.7%)
		60 °C	15.0 (85.7%)	15.0 (85.7%)	15.0 (85.7%)	15.0 (85.7%)	14.5 (82.9%)	14.0 (80.0%)	13.5 (77.1%)	13.0 (74.3%)	12.5 (71.4%)	12.0 (68.6%)	11.5 (65.7%)	11.0 (62.9%)	10.5 (60.0%)	10.0 (57.1%)	9.5 (54.3%)	9.0 (51.4%)
	FR3	40 °C	25.3 (100.0%)	25.3 (100.0%)	25.3 (100.0%)	25.3 (100.0%)	25.3 (100.0%)	25.3 (100.0%)	25.3 (100.0%)	25.3 (100.0%)	24.6 (97.0%)	23.8 (94.1%)	23.1 (91.1%)	22.3 (88.1%)	21.6 (85.2%)	20.8 (82.2%)	20.1 (79.2%)	19.3 (76.3%)
		50 °C	25.3 (100.0%)	25.3 (100.0%)	25.3 (100.0%)	25.3 (100.0%)	24.5 (96.9%)	23.8 (93.9%)	23.0 (90.8%)	22.2 (87.7%)	21.4 (84.7%)	20.7 (81.6%)	19.9 (78.6%)	19.1 (75.5%)	18.3 (72.4%)	17.6 (69.4%)	16.8 (66.3%)	16.0 (63.2%)
		60 °C	21.0 (83.0%)	21.0 (83.0%)	21.0 (83.0%)	21.0 (83.0%)	20.3 (80.0%)	19.5 (77.1%)	18.8 (74.1%)	18.0 (71.1%)	17.3 (68.2%)	16.5 (65.2%)	15.8 (62.3%)	15.0 (59.3%)	14.3 (56.3%)	13.5 (53.4%)	12.8 (50.4%)	12.0 (47.4%)
	FR4	40 °C	48.3 (100.0%)	48.3 (100.0%)	48.3 (100.0%)	48.3 (100.0%)	48.3 (100.0%)	48.3 (100.0%)	48.3 (100.0%)	48.3 (100.0%)	46.6 (96.5%)	44.9 (93.0%)	43.2 (89.4%)	41.5 (85.9%)	39.8 (82.4%)	38.1 (78.9%)	36.4 (75.4%)	34.7 (71.8%)
		50 °C	48.3 (100.0%)	48.3 (100.0%)	48.3 (100.0%)	48.3 (100.0%)	46.7 (96.7%)	45.2 (93.5%)	43.6 (90.2%)	42.0 (87.0%)	40.4 (83.7%)	38.9 (80.4%)	37.3 (77.2%)	35.7 (73.9%)	34.1 (70.7%)	32.6 (67.4%)	31.0 (64.1%)	29.4 (60.9%)
		60 °C	38.0 (78.7%)	38.0 (78.7%)	38.0 (78.7%)	38.0 (78.7%)	36.8 (76.1%)	35.5 (73.5%)	34.3 (70.9%)	33.0 (68.3%)	31.8 (65.7%)	30.5 (63.1%)	29.3 (60.6%)	28.0 (58.0%)	26.8 (55.4%)	25.5 (52.8%)	24.3 (50.2%)	23.0 (47.6%)

Table 31. Temperature derating (CT) (continued).

			Maximum rated current amps, (percentage of rated current)															
			Switching frequency															
Input voltage	Frame size	Temp (°C)	1 kHz	2 kHz	3 kHz	4 kHz	5 kHz	6 kHz	7 kHz	8 kHz	9 kHz	10 kHz	11 kHz	12 kHz	13 kHz	14 kHz	15 kHz	16 kHz
380 Vac to 480 Vac 50/60 Hz 3-phase	FR1	40 °C	5.6 (100.0%)	5.6 (100.0%)	5.6 (100.0%)	5.6 (100.0%)	5.6 (100.0%)	5.6 (100.0%)	5.6 (100.0%)	5.6 (100.0%)	5.4 (95.5%)	5.1 (91.1%)	4.9 (86.6%)	4.6 (82.1%)	4.4 (77.7%)	4.1 (73.2%)	3.9 (68.8%)	3.6 (64.3%)
		50 °C	5.6 (100.0%)	5.6 (100.0%)	5.6 (100.0%)	5.6 (100.0%)	5.4 (95.5%)	5.1 (91.1%)	4.9 (86.6%)	4.6 (82.1%)	4.4 (77.7%)	4.1 (73.2%)	3.9 (68.8%)	3.6 (64.3%)	3.4 (59.8%)	3.1 (55.4%)	2.9 (50.9%)	2.6 (46.4%)
		60 °C	4.6 (82.1%)	4.6 (82.1%)	4.6 (82.1%)	4.6 (82.1%)	4.4 (77.7%)	4.1 (73.2%)	3.9 (68.8%)	3.6 (64.3%)	3.4 (59.8%)	3.1 (55.4%)	2.9 (50.9%)	2.6 (46.4%)	2.4 (42.0%)	2.1 (37.5%)	1.9 (33.0%)	1.6 (28.6%)
	FR2	40 °C	16.0 (100.0%)	16.0 (100.0%)	16.0 (100.0%)	16.0 (100.0%)	15.4 (96.5%)	14.9 (93.0%)	14.3 (89.5%)	13.8 (85.9%)	13.2 (82.4%)	12.6 (78.9%)	12.1 (75.4%)	11.5 (71.9%)	10.9 (68.4%)	10.4 (64.8%)	9.8 (61.3%)	9.3 (57.8%)
		50 °C	16.0 (100.0%)	16.0 (100.0%)	16.0 (100.0%)	16.0 (100.0%)	15.1 (94.5%)	14.3 (89.1%)	13.4 (83.6%)	12.5 (78.1%)	11.6 (72.7%)	10.8 (67.2%)	9.9 (61.7%)	9.0 (56.3%)	8.1 (50.8%)	7.3 (45.3%)	6.4 (39.8%)	5.5 (34.4%)
		60 °C	14.0 (87.5%)	14.0 (87.5%)	14.0 (87.5%)	14.0 (87.5%)	13.1 (82.0%)	12.3 (76.6%)	11.4 (71.1%)	10.5 (65.6%)	9.6 (60.2%)	8.8 (54.7%)	7.9 (49.2%)	7.0 (43.8%)	6.1 (38.3%)	5.3 (32.8%)	4.4 (27.3%)	3.5 (21.9%)
	FR3	40 °C	23.0 (100.0%)	23.0 (100.0%)	23.0 (100.0%)	23.0 (100.0%)	22.2 (96.4%)	21.3 (92.8%)	20.5 (89.1%)	19.7 (85.5%)	18.8 (81.9%)	18.0 (78.3%)	17.2 (74.7%)	16.3 (71.0%)	15.5 (67.4%)	14.7 (63.8%)	13.8 (60.2%)	13.0 (56.6%)
		50 °C	23.0 (100.0%)	23.0 (100.0%)	23.0 (100.0%)	23.0 (100.0%)	21.8 (94.6%)	20.5 (89.1%)	19.3 (83.7%)	18.0 (78.3%)	16.8 (72.8%)	15.5 (67.4%)	14.3 (62.0%)	13.0 (56.5%)	11.8 (51.1%)	10.5 (45.7%)	9.3 (40.2%)	8.0 (34.8%)
		60 °C	21.0 (91.3%)	21.0 (91.3%)	21.0 (91.3%)	21.0 (91.3%)	19.8 (85.9%)	18.5 (80.4%)	17.3 (75.0%)	16.0 (69.6%)	14.8 (64.1%)	13.5 (58.7%)	12.3 (53.3%)	11.0 (47.8%)	9.8 (42.4%)	8.5 (37.0%)	7.3 (31.5%)	6.0 (26.1%)
	FR4	40 °C	38.0 (100.0%)	38.0 (100.0%)	38.0 (100.0%)	38.0 (100.0%)	36.2 (95.3%)	34.5 (90.7%)	32.7 (86.0%)	30.9 (81.3%)	29.1 (76.6%)	27.4 (72.0%)	25.6 (67.3%)	23.8 (62.6%)	22.0 (58.0%)	20.3 (53.3%)	18.5 (48.6%)	16.7 (43.9%)
		50 °C	38.0 (100.0%)	38.0 (100.0%)	38.0 (100.0%)	38.0 (100.0%)	36.0 (94.7%)	34.0 (89.5%)	32.0 (84.2%)	30.0 (78.9%)	28.0 (73.7%)	26.0 (68.4%)	24.0 (63.2%)	22.0 (57.9%)	20.0 (52.6%)	18.0 (47.4%)	16.0 (42.1%)	14.0 (36.8%)
		60 °C	30.0 (78.9%)	30.0 (78.9%)	30.0 (78.9%)	30.0 (78.9%)	28.4 (74.7%)	26.8 (70.4%)	25.1 (66.1%)	23.5 (61.8%)	21.9 (57.6%)	20.3 (53.3%)	18.6 (49.0%)	17.0 (44.7%)	15.4 (40.5%)	13.8 (36.2%)	12.1 (31.9%)	10.5 (27.6%)
525 Vac to 600 Vac 50/60 Hz 3-phase	FR2	40 °C																
		50 °C																
		60 °C																
	FR3	40 °C																
		50 °C																
		60 °C																
	FR4	40 °C																
		50 °C																
		60 °C																

Heat loss data

Table 32. Losses, cooling requirements, and audible noise.

			Output Rating		Control only		Max rating		Airflow	Noise
Input voltage	Frame size	Drive catalog number	CT/I_H current amps	VT/I_L current amps	Fans on watts	Fans off watts	CT/IH watts	VT/IL watts	CFM (m3/h)	dBA
100 Vac to 120 Vac 50/60 Hz 1-phase	FR1	DM1-111D6…	1.6	2.5	12	8	22	33	14.83 (25.2)	56.9
		DM1-113D0…	3	4.8	12	8	48.5	81.1	14.83 (25.2)	56.9
	FR2	DM1-114D8…	4.8	6.9	16.5	10.1	51	73	24.72 (42)	55.6
		DM1-116D9…	6.9	7.8	16.5	10.1	73	84	24.72 (42)	55.6
200 Vac to 240 Vac 50/60 Hz 1-phase	FR1	DM1-121D6…	1.6	2.5	13	9	22	31	14.83 (25.2)	56.9
		DM1-123D0…	3	4.8	13	9	34	56	14.83 (25.2)	56.9
		DM1-124D8…	4.8	7.8	13	9	53	93	14.83 (25.2)	56.9
	FR2	DM1-127D8…	7.8	11	22	11	79	113	37.43 (63.6)	65.6
		DM1-12011…	11	17.5	22	11	116	201	37.43 (63.6)	65.6
	FR3	DM1-12017…	17.5	25.3	24	12	163	254	42.37 (72)	58.7
200 Vac to 240 Vac 50/60 Hz 3-phase	FR1	DM1-321D6…	1.6	2.5	12	8	22	33	14.83 (25.2)	56.9
		DM1-323D0…	3	4.8	12	8	37.6	46.4	14.83 (25.2)	56.9
		DM1-324D8…	4.8	7.8	12	8	42	85	14.83 (25.2)	56.9
		DM1-327D8…	7.8	11	12	8	75	99	14.83 (25.2)	56.9
	FR2	DM1-32011…	11	17.5	16.5	10.1	93	159	24.72 (42)	55.6
		DM1-32017…	17.5	25.3	16.5	10.1	140.3	242.7	24.72 (42)	55.6
	FR3	DM1-32025…	25.3	32.2	19.5	10.4	237.4	332.3	42.37 (72)	58.7
	FR4	DM1-32032…	32.2	48.3	43	11.7	260.7	432.4	75.56 (128.4)	65.9
		DM1-32048…	48.3	62.1	43	11.7	445.4	618.2	75.56 (128.4)	65.9
380 Vac to 480 Vac 50/60 Hz 3-phase	FR1	DM1-341D5…	1.5	2.2	13	9	37	43	14.83 (25.2)	56.9
		DM1-342D2…	2.2	4.3	13	9	56	65	14.83 (25.2)	56.9
		DM1-344D3…	4.3	5.6	13	9	62	75	14.83 (25.2)	56.9
		DM1-345D6…	5.6	7.6	13	9	79	113	14.83 (25.2)	56.9
	FR2	DM1-347D6…	7.6	12	22	12	114	150	37.43 (63.6)	65.6
		DM1-34012…	12	16	22	12	140	203	37.43 (63.6)	65.6
		DM1-34016…	16	23	22	12	216.4	332.4	37.43 (63.6)	65.6
	FR3	DM1-34023..	23	31	37.7	17.8	282.3	407.4	58.61 (99.6)	64
	FR4	DM1-34031…	31	38	47.5	16.9	296.7	393.8	57.56 (97.8)	65.9
		DM1-34038…	38	46	47.5	16.9	428.2	473.4	57.56 (97.8)	65.9
525 Vac to 600 Vac 50/60 Hz 3-phase	FR2	DM1-354D5…	4.5	7.5						
		DM1-357D5…	7.5	10						
		DM1-35010…	10	13.5						
	FR3	DM1-35013…	13.5	18						
	FR4	DM1-35018…	18	22						
		DM1-35022…	22	27						

Brake resistor sizing

Table 33. Dynamic brake resistors.

			Output rating		Resistor specifications							
Input voltage	**Frame size**	**Drive catalog number**	**CT/I_H current amps**	**VT/I_L current amps**	**Minimum resitance ohms**	**Suggested resistance ohms**	**10% duty cycle 100% torque watts**	**20% duty cycle 100% torque watts**	**40% duty cycle 100% torque watts**	**50% duty cycle 150% torque watts**	**20% duty cycle 100% torque catalog number**	**50% duty cycle 150% torque catalog number**
100 Vac to 120 Vac 50/60 Hz 1-phase	FR1	DM1-111D6…	1.6	2.5	47	100	80	160	320	400		DBR-R100-W0400
		DM1-113D0…	3	4.8	47	100	80	160	320	400		DBR-R100-W0400
	FR2	DM1-114D8…	4.8	6.9	27	100	80	160	320	400		DBR-R100-W0400
		DM1-116D9…	6.9	7.8	27	100	80	160	320	400		DBR-R100-W0400
200 Vac to 240 Vac 50/60 Hz 1-phase	FR1	DM1-121D6…	1.6	2.5	36	100	80	160	320	400		DBR-R100-W0400
		DM1-123D0…	3	4.8	36	100	80	160	320	400		DBR-R100-W0400
		DM1-124D8…	4.8	7.8	36	100	80	160	320	400		DBR-R100-W0400
	FR2	DM1-127D8…	7.8	11	27	100	80	160	320	400		DBR-R100-W0400
		DM1-12011…	11	17.5	27	40	200	400	800	1000	DBR-R100-W0400	DBR-R036-W1200
	FR3	DM1-12017…	17.5	25.3	16	40	200	400	800	1000	DBR-R100-W0400	DBR-R036-W1200
200 Vac to 240 Vac 50/60 Hz 3-phase	FR1	DM1-321D6…	1.6	2.5	36	100	80	160	320	400		DBR-R100-W0400
		DM1-323D0…	3	4.8	36	100	80	160	320	400		DBR-R100-W0400
		DM1-324D8…	4.8	7.8	36	100	80	160	320	400		DBR-R100-W0400
		DM1-327D8…	7.8	11	36	100	80	160	320	400		DBR-R100-W0400
	FR2	DM1-32011…	11	17.5	16	40	200	400	800	1000	DBR-R100-W0400	DBR-R036-W1200
		DM1-32017…	17.5	25.3	16	40	200	400	800	1000	DBR-R100-W0400	DBR-R036-W1200
	FR3	DM1-32025…	25.3	32.2	12	20	400	800	1600	2000	DBR-R036-W0800	DBR-R012-W2400
	FR4	DM1-32032…	32.2	48.3	6	20	400	800	1600	2000	DBR-R036-W0800	DBR-R012-W2400
		DM1-32048…	48.3	62.1	6	20	400	800	1600	2000	DBR-R036-W0800	DBR-R012-W2400

Table 33. Dynamic brake resistors (continued).

			Output rating		Resistor specifications							
Input voltage	**Frame size**	**Drive catalog number**	**CT/I_H current amps**	**VT/I_L current amps**	**Minimum resitance ohms**	**Suggested resistance ohms**	**10% duty cycle 100% torque watts**	**20% duty cycle 100% torque watts**	**40% duty cycle 100% torque watts**	**50% duty cycle 150% torque watts**	**20% duty cycle 100% torque catalog number**	**50% duty cycle 150% torque catalog number**
380 Vac to 480 Vac 50/60 Hz 3-phase	FR1	DM1-341D5…	1.5	2.2	105	400	80	160	320	400		DBR-R100-W0400
		DM1-342D2…	2.2	4.3	105	400	80	160	320	400		DBR-R100-W0400
		DM1-344D3…	4.3	5.6	105	400	80	160	320	400		DBR-R100-W0400
		DM1-345D6…	5.6	7.6	105	128	250	500	1000	1250	DBR-R100-W0800	DBR-R100-W1200
	FR2	DM1-347D6…	7.6	12	35	128	250	500	1000	1250	DBR-R100-W0800	DBR-R063-W1600
		DM1-34012…	12	16	35	128	250	500	1000	1250	DBR-R100-W0800	DBR-R063-W1600
		DM1-34016…	16	23	35	80	400	800	1600	2000	DBR-R100-W0800	DBR-R100-W2000
	FR3	DM1-34023..	23	31	26	80	400	800	1600	2000	DBR-R100-W0800	DBR-R100-W2000
	FR4	DM1-34031…	31	38	17	40	800	1600	3200	4000	DBR-R063-W1600	DBR-R030-W4000
		DM1-34038…	38	46	17	40	800	1600	3200	4000	DBR-R063-W1600	DBR-R030-W4000
525 Vac to 600 Vac 50/60 Hz 3-phase	FR2	DM1-354D5…	4.5	7.5								
		DM1-357D5…	7.5	10								
		DM1-35010…	10	13.5								
	FR3	DM1-35013…	13.5	18								
	FR4	DM1-35018…	18	22								
		DM1-35022…	22	27								

The input current scaling describes what the input current will be if an undersized motor is applied to the drive. This allows for smaller cables and circuit protection where oversized drives are used. Three options are provide to allow flexibility in installations.

Table 34. Input current scaling .

			Output rating								Input rating							
			Max rating		Option 1		Option 2		Option 3		Max rating		Option 1		Option 2		Option 3	
Input voltage	Frame size	Drive catalog number	CT/I_H current amps	VT/I_L current amps	CT/I_H current amps	VT/I_L current amps	CT/I_H current amps	VT/I_L current amps	CT/I_H current amps	VT/I_L current amps	CT/I_H current amps	VT/I_L current amps	CT/I_H current amps	VT/I_L current amps	CT/I_H current amps	VT/I_L current amps	CT/I_H current amps	VT/I_L current amps
100 Vac to 120 Vac 50/60 Hz 1-Phase	FR1	DM1-111D6…	1.6	2.5	1.3	1.6	1	1.3	0.8	1								
		DM1-113D0…	3	4.8	1.6	2.5	1.3	1.6	1	1.3								
	FR2	DM1-114D8…	4.8	6.9	3	4.8	1.6	2.5	1.3	1.6								
		DM1-116D9…	6.9	7.8	4.8	6.9	3	4.8	1.6	2.5								
200 Vac to 240 Vac 50/60 Hz 1-phase	FR1	DM1-121D6…	1.6	2.5	1.3	1.6	1	1.3	0.8	1								
		DM1-123D0…	3	4.8	1.6	2.5	1.3	1.6	1	1.3								
		DM1-124D8…	4.8	6.9	3	4.8	1.6	2.5	1.3	1.6								
	FR2	DM1-127D8…	7.8	11	4.8	7.8	3	4.8	1.6	2.5								
		DM1-12011…	11	17.5	7.8	11	4.8	7.8	3	4.8								
	FR3	DM1-12017…	17.5	25.3	11	17.5	7.8	11	4.8	7.8								
200 Vac to 240 Vac 50/60 Hz 3-phase	FR1	DM1-321D6…	1.6	2.5	1.3	1.6	1	1.3	0.8	1	2.1	3.3	1.5	2.1	1.2	1.5	1	1.2
		DM1-323D0…	3	4.8	1.6	2.5	1.3	1.6	1	1.3	3.9	5.8	2.1	3.3	1.5	2.1	1.2	1.5
		DM1-324D8…	4.8	6.9	3	4.8	1.6	2.5	1.3	1.6	5.8	9.4	3.9	5.8	2.1	3.3	1.5	2.1
		DM1-327D8…	7.8	11	4.8	7.8	3	4.8	1.6	2.5	9.4	13.2	5.8	9.4	3.9	5.8	2.1	3.3
	FR2	DM1-32011…	11	17.5	7.8	11	4.8	7.8	3	4.8	12.7	20.1	9.4	13.2	5.8	9.4	3.9	5.8
		DM1-32017…	17.5	25.3	11	17.5	7.8	11	4.8	7.8	20.1	29.1	12.7	20.1	9.4	13.2	5.8	9.4
	FR3	DM1-32025…	25.3	32.2	17.5	25.3	11	17.5	7.8	11	29.1	37	20.1	29.1	12.7	20.1	9.4	13.2
	FR4	DM1-32032…	32.2	48.3	25.3	32.2	17.5	25.3	11	17.5	35.4	53.1	29.1	37	20.1	29.1	12.7	20.1
		DM1-32048…	48.3	62.1	32.2	48.3	25.3	32.2	17.5	25.3	53.1	68.3	35.4	53.1	29.1	37	20.1	29.1

Table 34. Input current scaling (continued).

			Output rating								Input rating							
			Max rating		Option 1		Option 2		Option 3		Max rating		Option 1		Option 2		Option 3	
Input voltage	Frame size	Drive catalog number	CT/I_H current amps	VT/I_L current amps	CT/I_H current amps	VT/I_L current amps	CT/I_H current amps	VT/I_L current amps	CT/I_H current amps	VT/I_L current amps	CT/I_H current amps	VT/I_L current amps	CT/I_H current amps	VT/I_L current amps	CT/I_H current amps	VT/I_L current amps	CT/I_H current amps	VT/I_L current amps
380 Vac to 480 Vac 50/60 Hz 3-phase	FR1	DM1-341D5…	1.5	2.2	1.1	1.5	0.9	1.1	0.7	0.9	1.8	2.6	1.5	1.8	1.2	1.5	1	1.2
		DM1-342D2…	2.2	4.3	1.5	2.2	1.1	1.5	0.9	1.1	2.6	5.2	1.8	2.6	1.5	1.8	1.2	1.5
		DM1-344D3…	4.3	5.6	2.2	4.3	1.5	2.2	1.1	1.5	5.2	6.7	2.6	5.2	1.8	2.6	1.5	1.8
		DM1-345D6…	5.6	7.6	4.3	5.6	2.2	4.3	1.5	2.2	6.7	9.1	5.2	6.7	2.6	5.2	1.8	2.6
	FR2	DM1-347D6…	7.6	12	5.6	7.6	4.3	5.6	2.2	4.3	9.1	14.4	6.7	9.1	5.2	6.7	2.6	5.2
		DM1-34012…	12	16	7.6	12	5.6	7.6	4.3	5.6	14.4	19.2	9.1	14.4	6.7	9.1	5.2	6.7
		DM1-34016…	16	23	12	16	7.6	12	5.6	7.6	19.2	27.6	14.4	19.2	9.1	14.4	6.7	9.1
	FR3	DM1-34023..	23	31	16	23	12	16	7.6	12	26.5	35.7	19.2	27.6	14.4	19.2	9.1	14.4
	FR4	DM1-34031…	31	38	23	31	16	23	12	16	35.7	43.7	26.5	35.7	19.2	27.6	14.4	19.2
		DM1-34038…	38	46	31	38	23	31	16	23	43.7	52.9	35.7	43.7	26.5	35.7	19.2	27.6
525 Vac to 600 Vac 50/60 Hz 3-Phase	FR2	DM1-354D5…	4.5	7.5	2.7	4.5	1.7	2.7	1.4	1.7								
		DM1-357D5…	7.5	10	4.5	7.5	2.7	4.5	1.7	2.7								
		DM1-35010…	10	13.5	7.5	10	4.5	7.5	2.7	4.5								
	FR3	DM1-35013…	13.5	18	10	13.5	7.5	10	4.5	7.5								
	FR4	DM1-35018…	18	22	13.5	18	10	13.5	7.5	10								
		DM1-35022…	22	27	18	22	13.5	18	10	13.5								

Table 35. Power factor and THDi.

Input line voltage (V)	Load torque	230V FR1				230V FR2				230V FR3				230V FR4			
		Total power factor	THDi			Total power factor	THDi			Total power factor	THDi			Total power factor	THDi		
			Phase R	Phase S	Phase T		Phase R	Phase S	Phase T		Phase R	Phase S	Phase T		Phase R	Phase S	Phase T
176.8	25%	0.82	65%	66%	65%	0.86	52%	53%	53%	0.71	97%	94%	94%	0.68	105%	103%	102%
	50%	0.89	45%	46%	46%	0.91	37%	38%	37%	0.76	82%	80%	79%	0.73	92%	91%	90%
	75%	0.91	37%	38%	39%	0.92	31%	32%	32%	0.78	76%	74%	74%	0.76	84%	83%	83%
	100%	0.92	33%	33%	34%	0.93	26%	28%	27%	0.81	68%	66%	65%	0.79	73%	74%	73%
208	25%	0.80	70%	69%	68%	0.86	54%	54%	54%	0.70	97%	93%	94%	0.63	113%	109%	111%
	50%	0.86	52%	52%	52%	0.91	37%	39%	38%	0.74	87%	84%	84%	0.73	94%	91%	91%
	75%	0.90	42%	42%	43%	0.92	31%	33%	31%	0.77	79%	77%	77%	0.75	85%	83%	84%
	100%	0.91	37%	37%	37%	0.93	28%	30%	28%	0.79	72%	71%	70%	0.77	79%	78%	78%
230	25%	0.78	74%	73%	72%	0.83	62%	63%	62%	0.68	102%	98%	100%	0.66	109%	106%	104%
	50%	0.85	58%	57%	55%	0.88	47%	48%	47%	0.74	89%	86%	86%	0.70	100%	98%	97%
	75%	0.89	45%	45%	46%	0.92	34%	36%	34%	0.77	81%	79%	78%	0.73	91%	89%	88%
	100%	0.90	39%	40%	40%	0.93	29%	31%	30%	0.79	74%	71%	71%	0.76	81%	81%	81%
264	25%	0.77	79%	77%	76%	0.83	61%	61%	61%	0.66	106%	101%	102%	0.67	108%	104%	107%
	50%	0.82	64%	64%	63%	0.90	42%	43%	41%	0.72	94%	91%	91%	0.71	98%	93%	95%
	75%	0.87	50%	50%	50%	0.91	37%	39%	37%	0.75	84%	82%	81%	0.75	87%	84%	85%
	100%	0.90	43%	43%	43%	0.92	32%	35%	32%	0.77	80%	78%	77%	0.76	84%	81%	82%

Input line voltage (V)	Load torque	480V FR1				480V FR2				480V FR3				480V FR4			
		Total power factor	THDi			Total power factor	THDi			Total power factor	THDi			Total power factor	THDi		
			Phase R	Phase S	Phase T		Phase R	Phase S	Phase T		Phase R	Phase S	Phase T		Phase R	Phase S	Phase T
323	0%	0.38	184%	159%	178%	0.45	177%	150%	157%	0.74	89%	85%	89%	0.78	77%	73%	74%
	50%	0.63	119%	118%	116%	0.67	106%	106%	106%	0.79	74%	70%	73%	0.85	59%	54%	56%
	75%	0.65	114%	113%	112%	0.71	96%	96%	96%	0.83	61%	58%	63%	0.89	47%	43%	45%
	100%	0.67	106%	104%	103%	0.71	95%	95%	95%	0.87	52%	48%	52%	0.91	41%	38%	40%
380	0%	0.35	186%	173%	193%	0.41	190%	171%	176%	0.73	93%	88%	93%	0.75	85%	80%	82%
	50%	0.59	134%	131%	132%	0.64	116%	115%	116%	0.77	81%	77%	80%	0.80	70%	67%	68%
	75%	0.61	127%	124%	123%	0.66	112%	111%	112%	0.80	72%	68%	72%	0.86	56%	52%	52%
	100%	0.66	109%	106%	105%	0.69	103%	102%	102%	0.83	62%	58%	63%	0.89	47%	45%	46%
480	0%	0.35	157%	144%	163%	0.40	172%	160%	165%	0.72	95%	91%	96%	0.73	90%	84%	87%
	50%	0.62	123%	118%	120%	0.66	110%	109%	111%	0.77	80%	76%	80%	0.81	69%	65%	68%
	75%	0.65	113%	110%	110%	0.69	102%	102%	102%	0.80	72%	69%	71%	0.86	55%	50%	53%
	100%	0.69	101%	98%	97%	0.71	95%	95%	95%	0.83	63%	58%	63%	0.89	46%	43%	45%
528	0%	0.32	181%	152%	161%	0.39	167%	152%	176%	0.71	98%	92%	97%	0.74	87%	82%	85%
	50%	0.64	116%	112%	109%	0.66	112%	110%	111%	0.76	83%	79%	82%	0.80	71%	67%	69%
	75%	0.66	111%	107%	107%	0.68	105%	104%	104%	0.79	73%	70%	73%	0.85	58%	52%	56%
	100%	0.67	108%	104%	104%	0.71	94%	95%	94%	0.82	65%	61%	65%	0.88	49%	45%	48%

Appendix C—Dimension drawings

Approximate dimensions in inches (mm).

Figure 12. DM1 Pro FR1 without NEMA 1 kit dimension drawing.

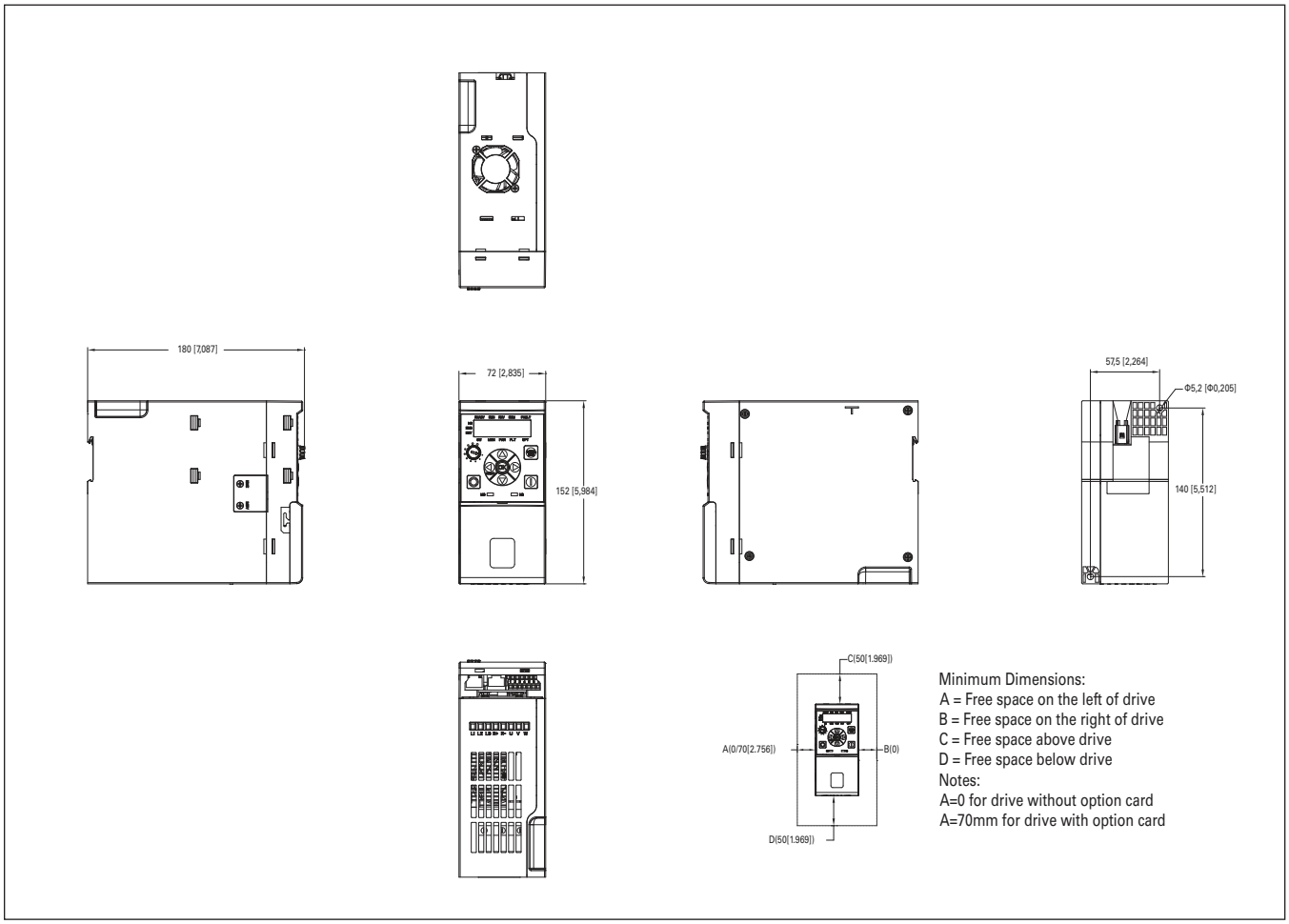

Approximate dimensions in inches (mm).

Figure 13. DM1 FR1 without NEMA 1 kit dimension drawing.

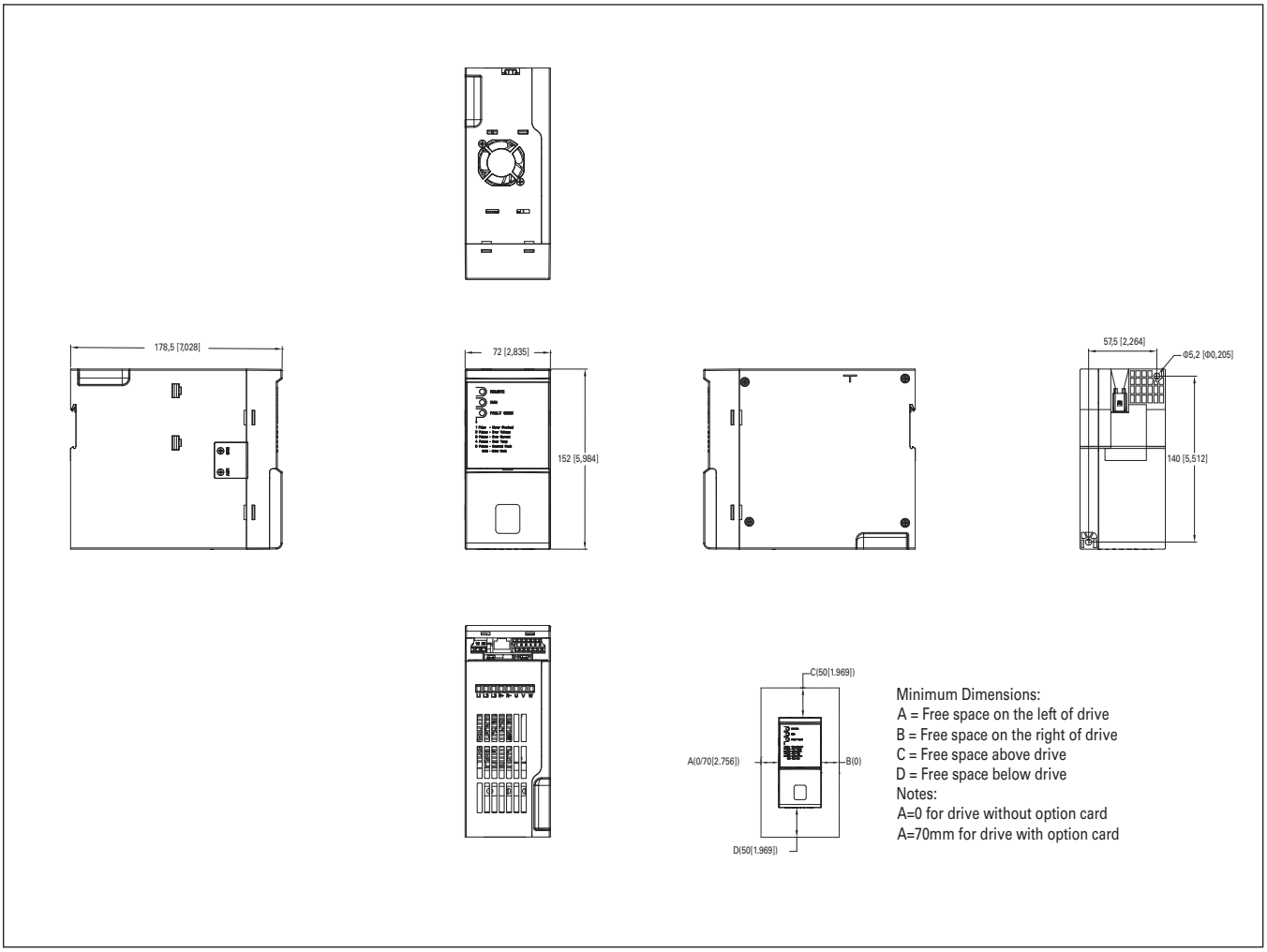

Approximate dimensions in inches (mm).

Figure 14. DM1 Pro FR2 without NEMA 1 kit dimension drawing.

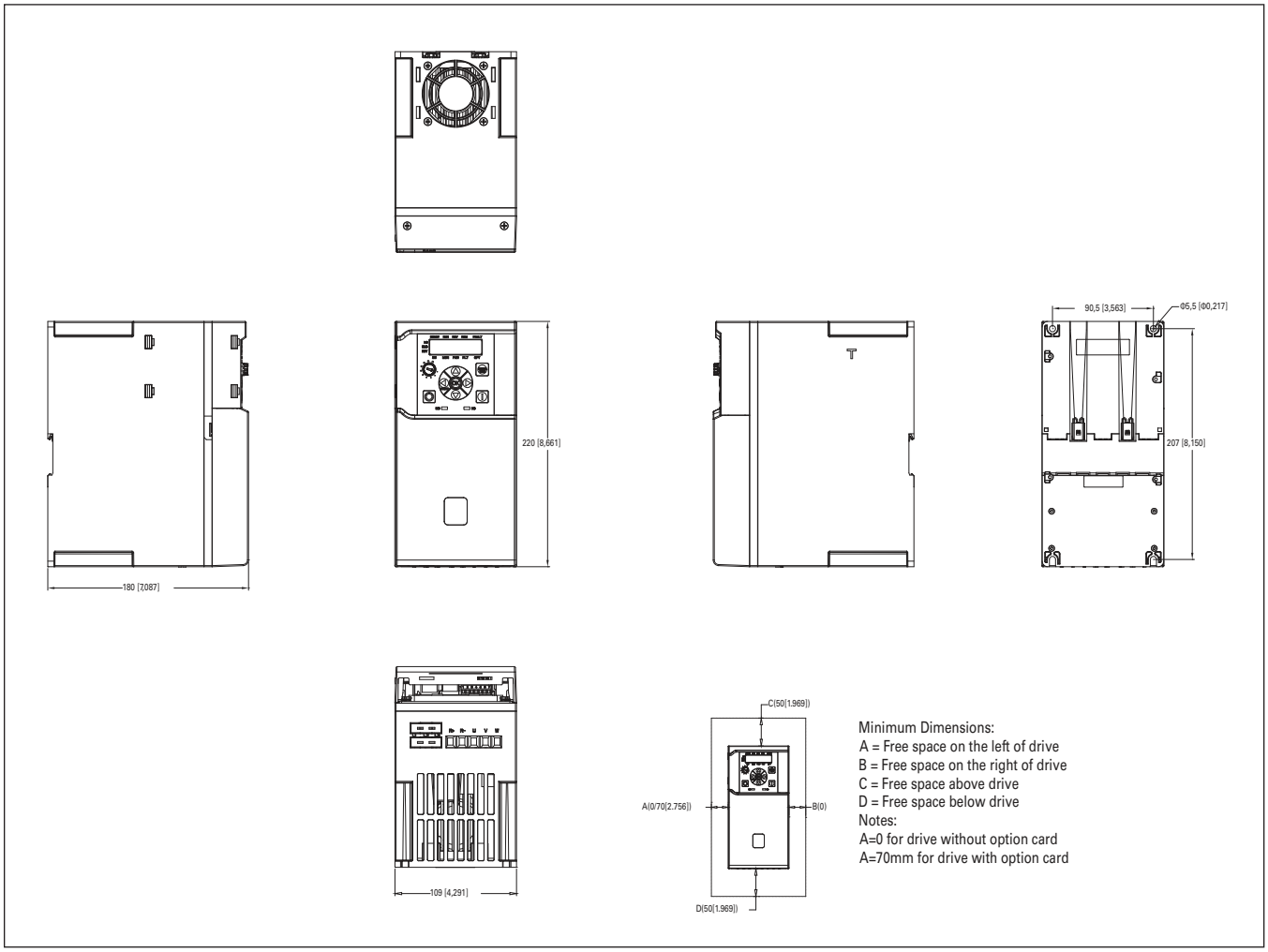

Approximate dimensions in inches (mm).

Figure 15. DM1 FR2 without NEMA 1 kit dimension drawing.

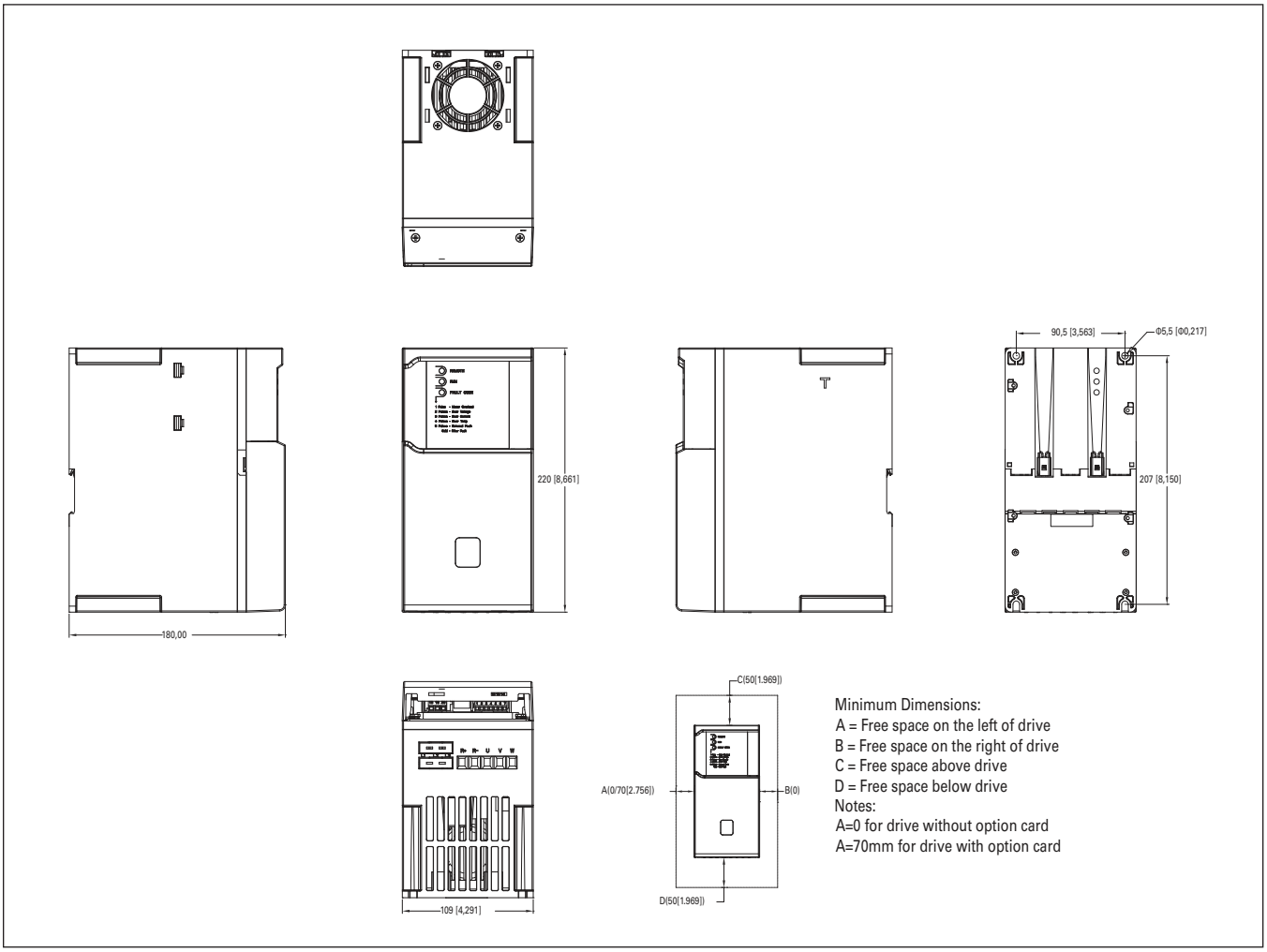

Approximate dimensions in inches (mm).

Figure 16. DM1 Pro FR3 without NEMA 1 kit dimension drawing.

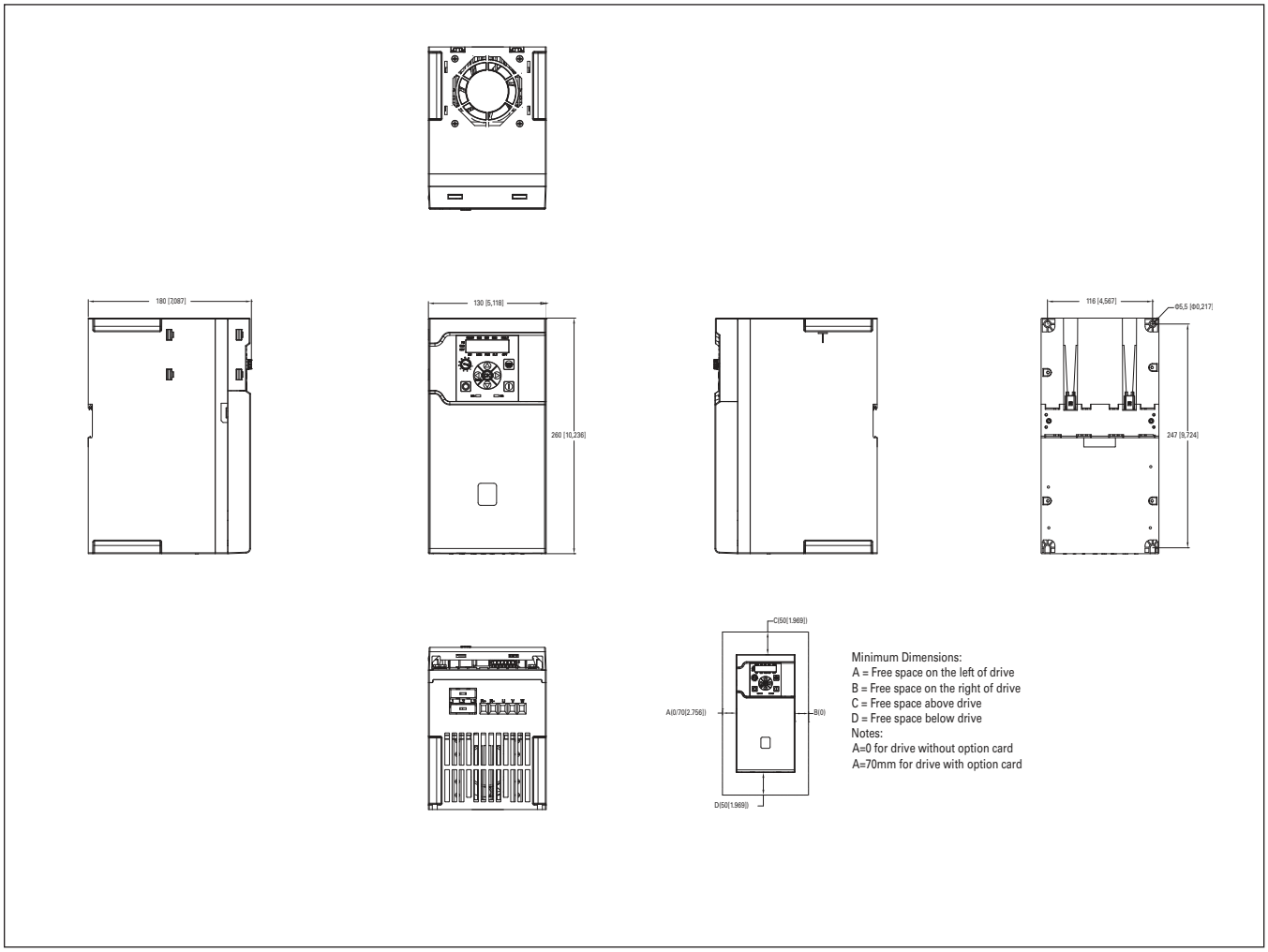

Approximate dimensions in inches (mm).

Figure 17. DM1 FR3 without NEMA 1 kit dimension drawing.

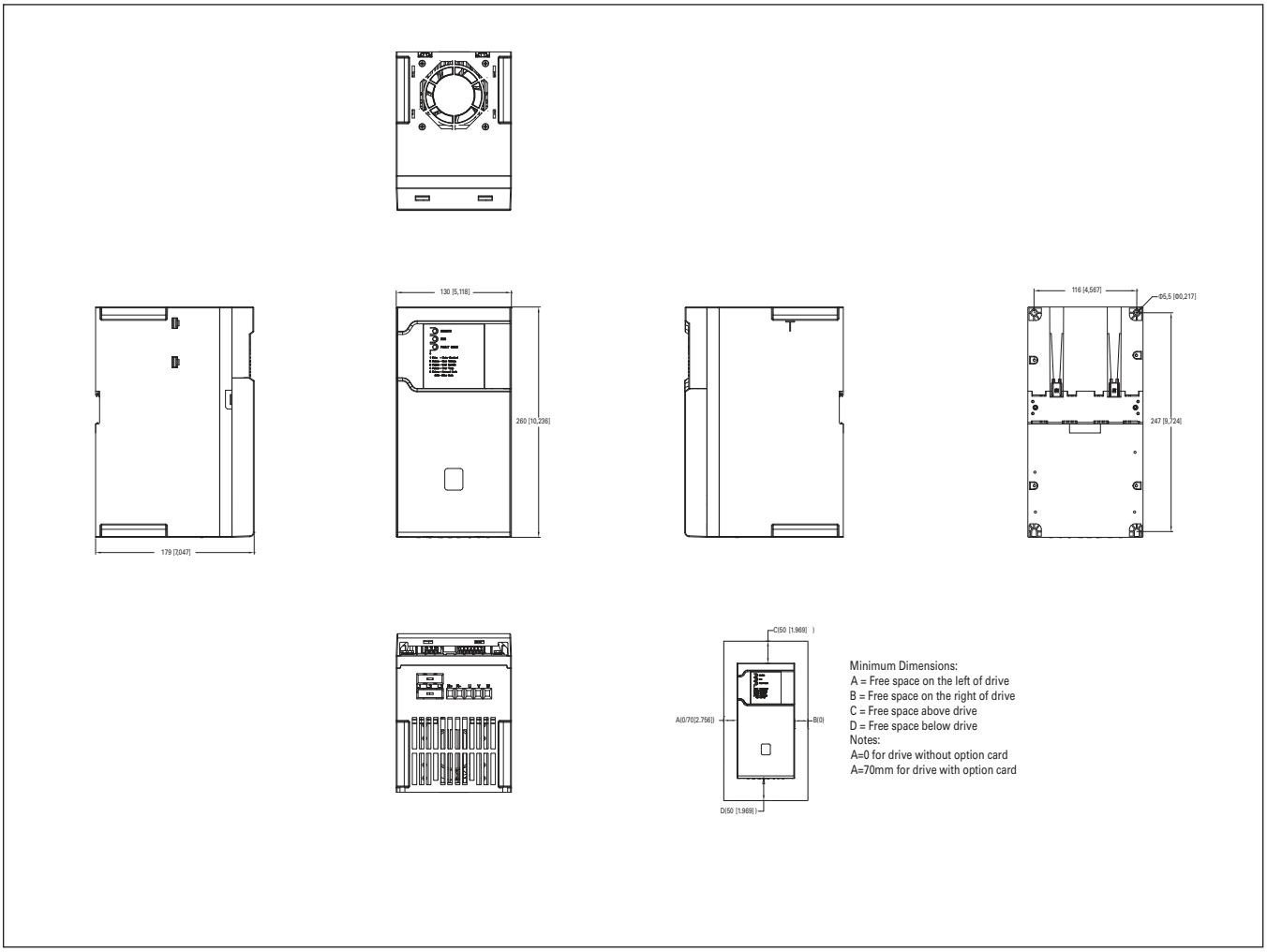

Approximate dimensions in inches (mm).

Figure 18. DM1 Pro FR4 without NEMA 1 kit dimension drawing.

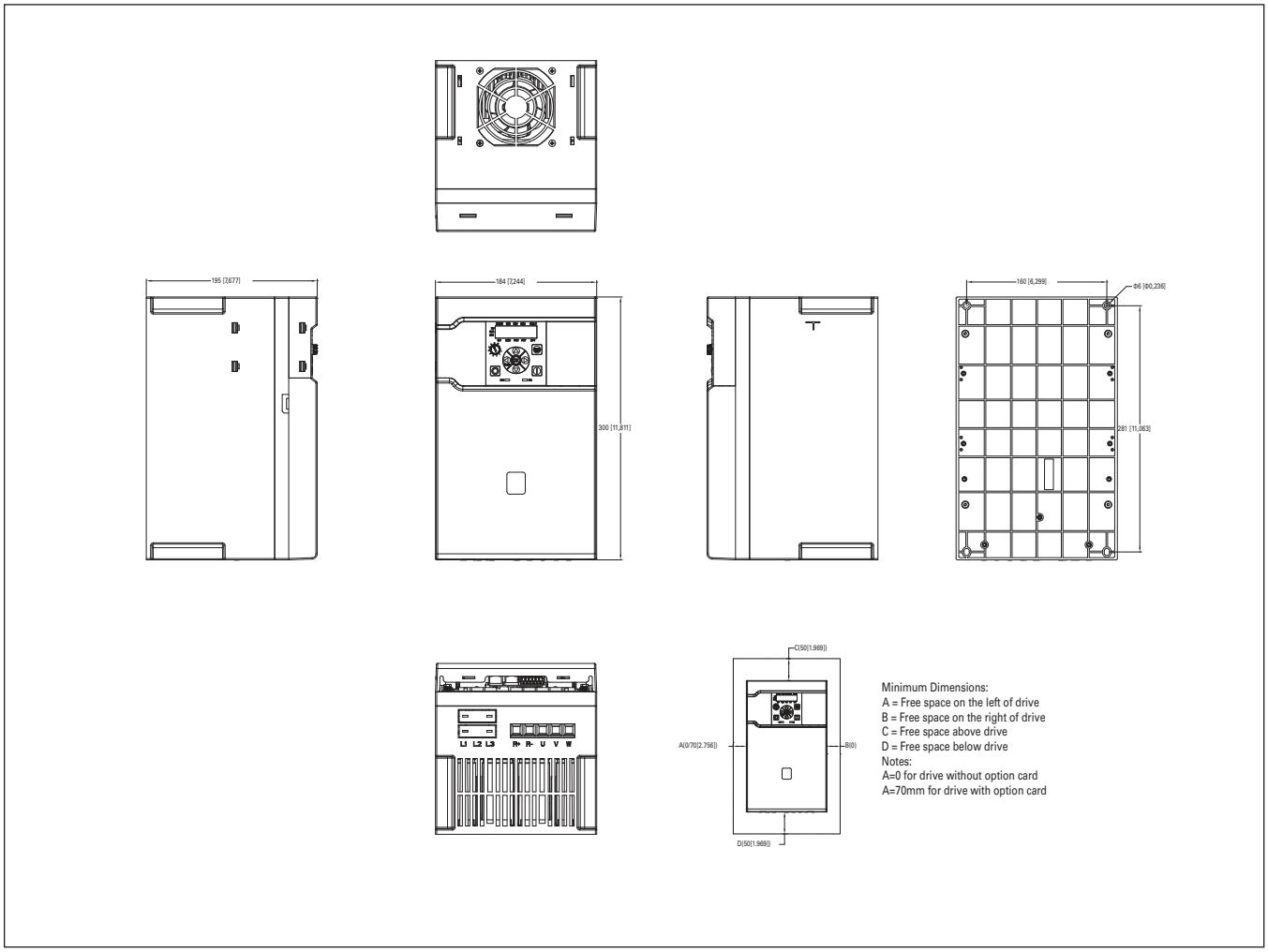

Approximate dimensions in inches (mm).

Figure 19. DM1 FR4 without NEMA 1 kit dimension drawing.

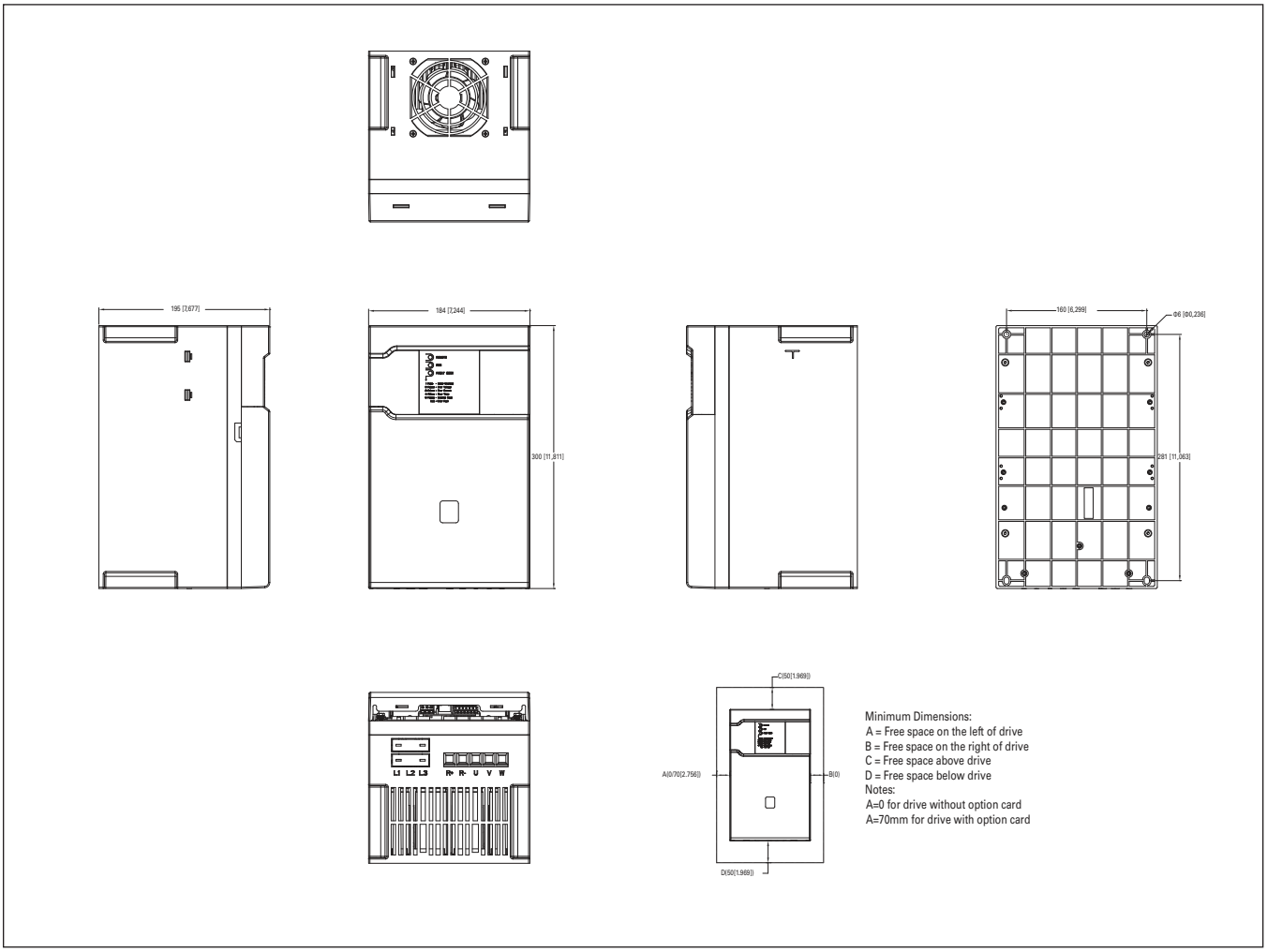

Approximate dimensions in inches (mm).

Figure 20. DM1 FR4 without NEMA 1 kit dimension drawing.

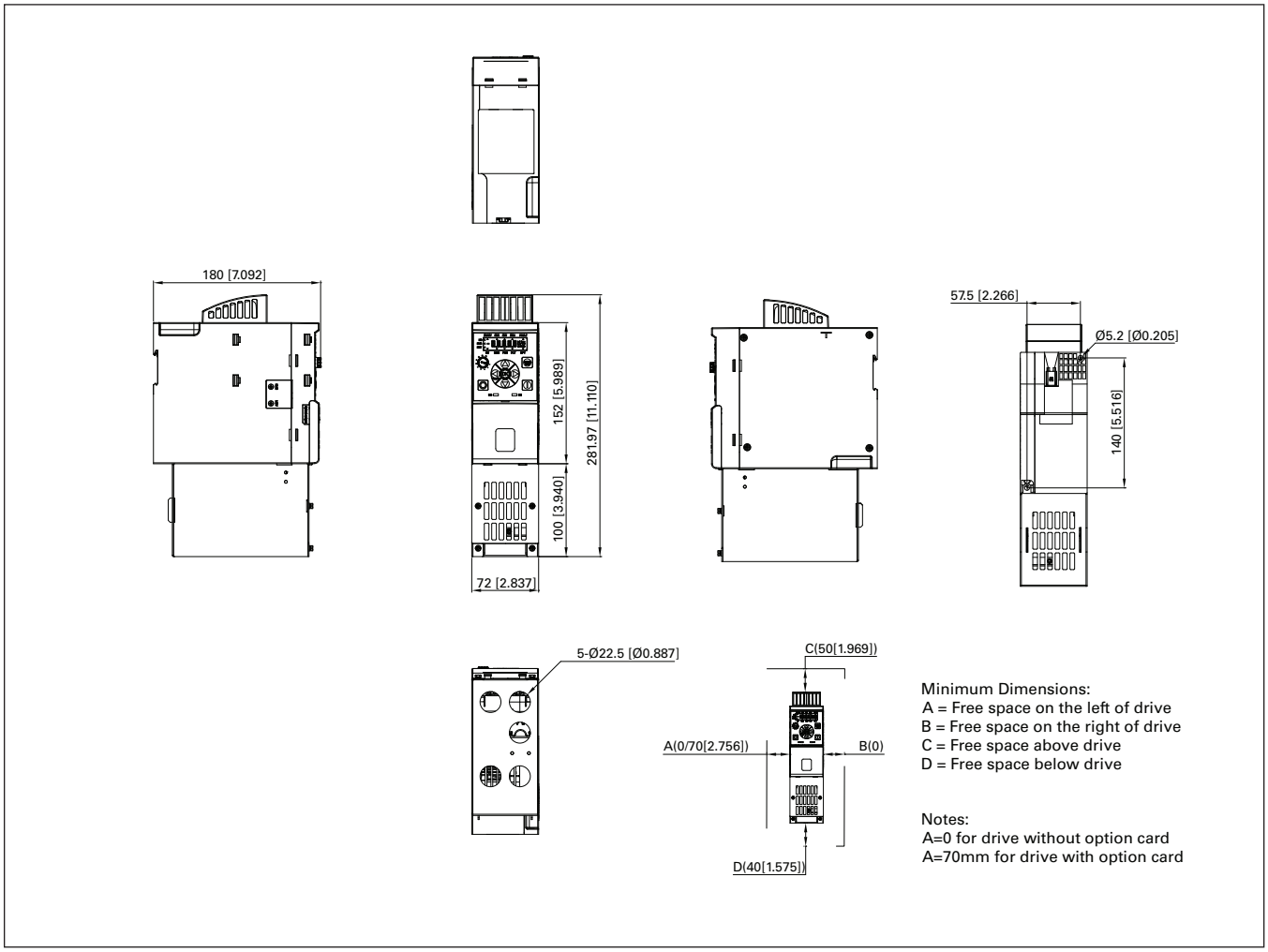

Approximate dimensions in inches (mm).

Figure 21. DM1 FR4 without NEMA 1 kit dimension drawing.

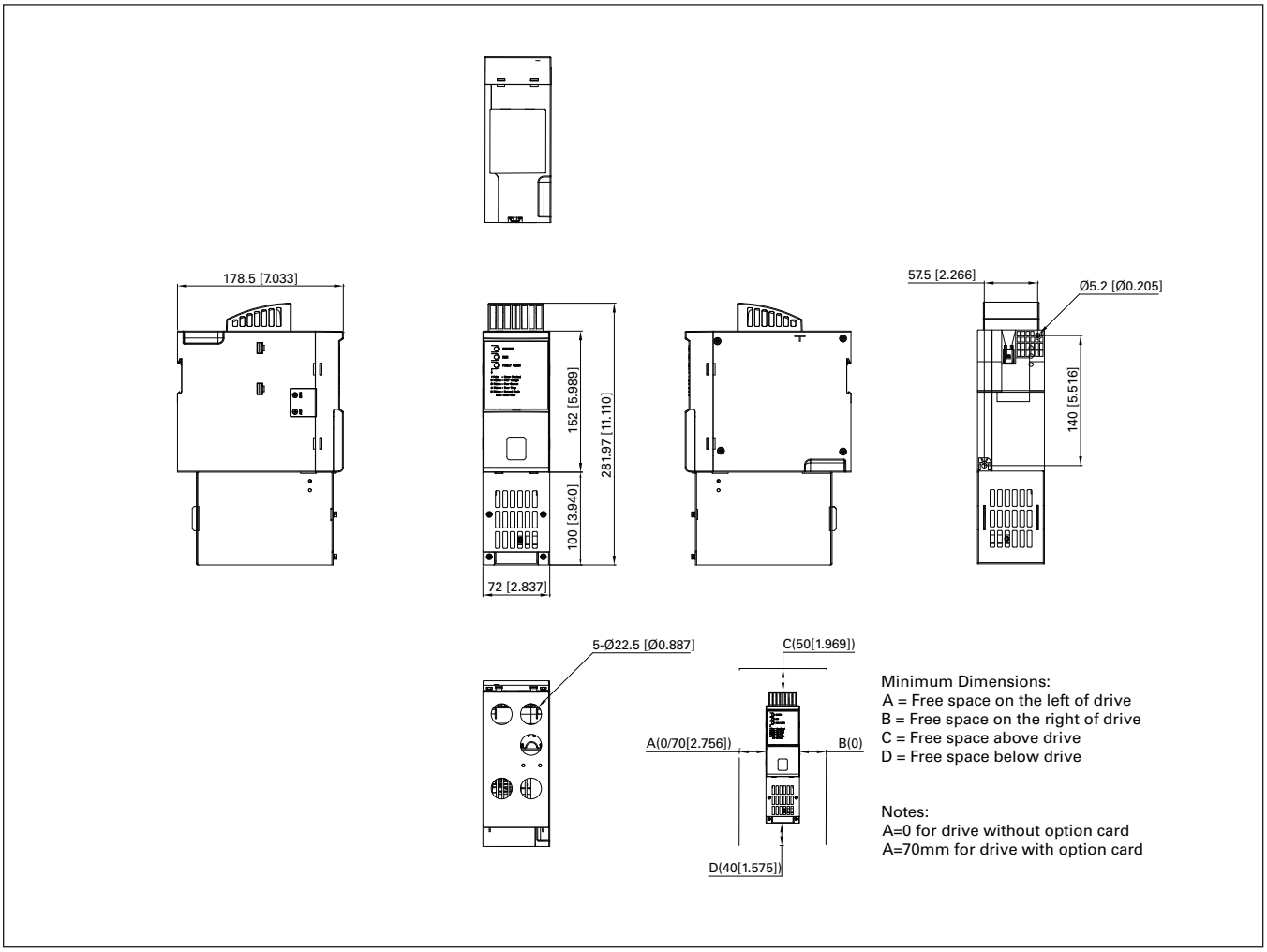

Approximate dimensions in inches (mm).

Figure 22. DM1 Pro FR1 with NEMA 1 kit dimension drawing.

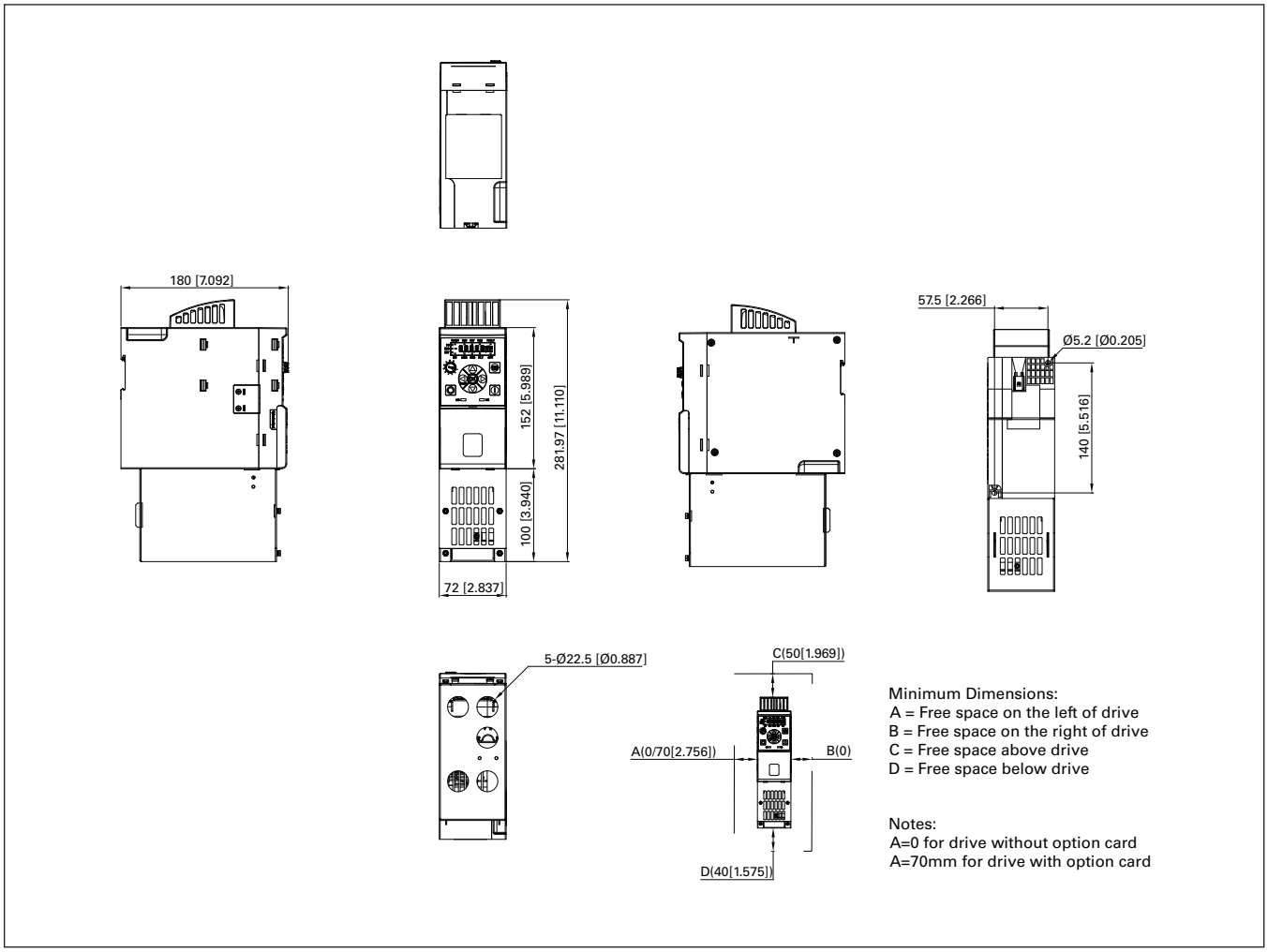

Approximate dimensions in inches (mm).

Figure 23. DM1 FR1 with NEMA 1 kit dimension drawing.

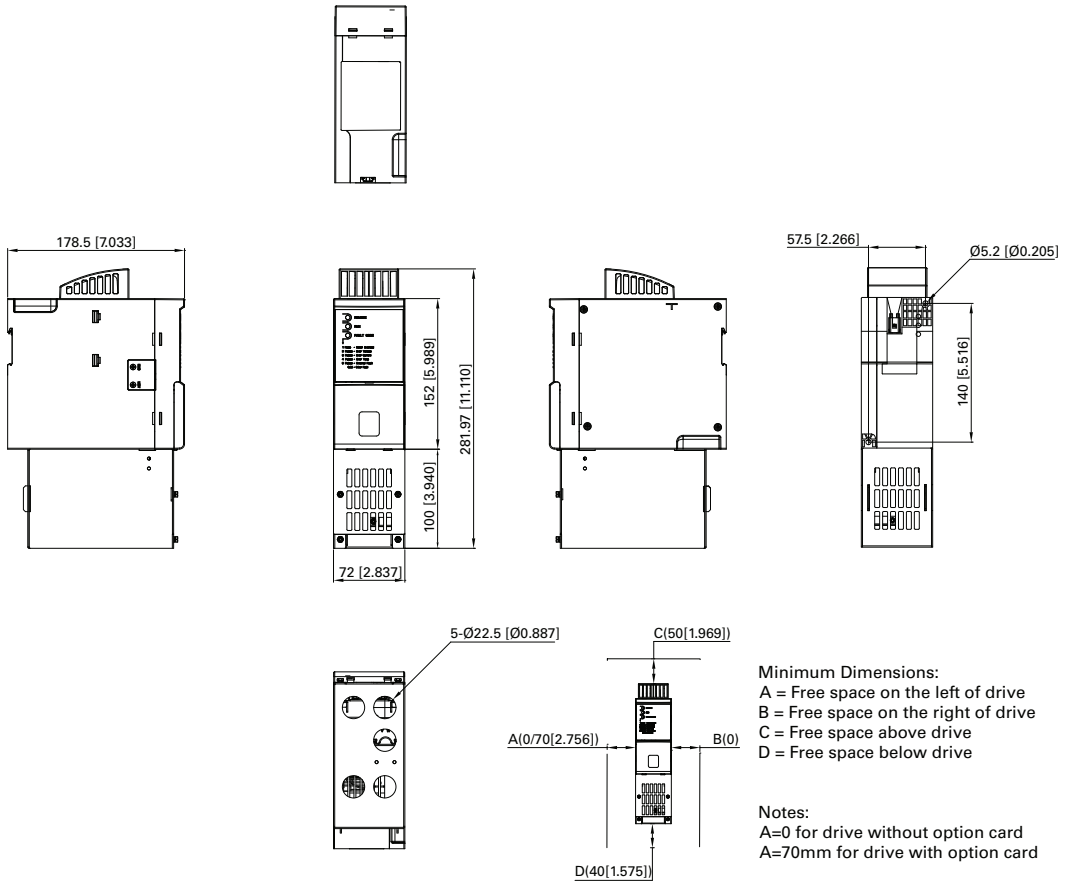

Approximate dimensions in inches (mm).

Figure 24. DM1 Pro FR2 with NEMA 1 kit dimension drawing.

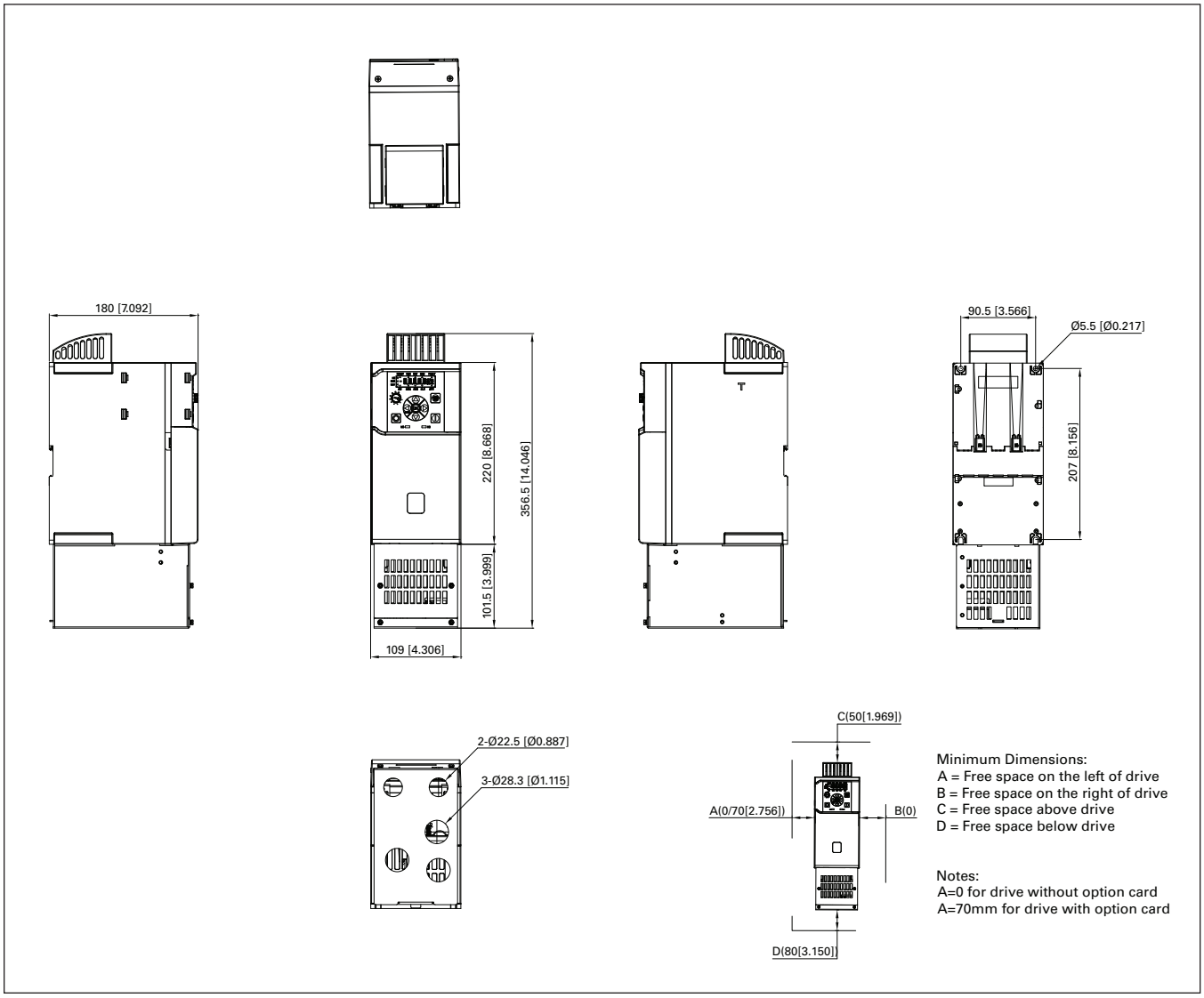

Approximate dimensions in inches (mm).

Figure 25. DM1 FR2 with NEMA 1 kit dimension drawing.

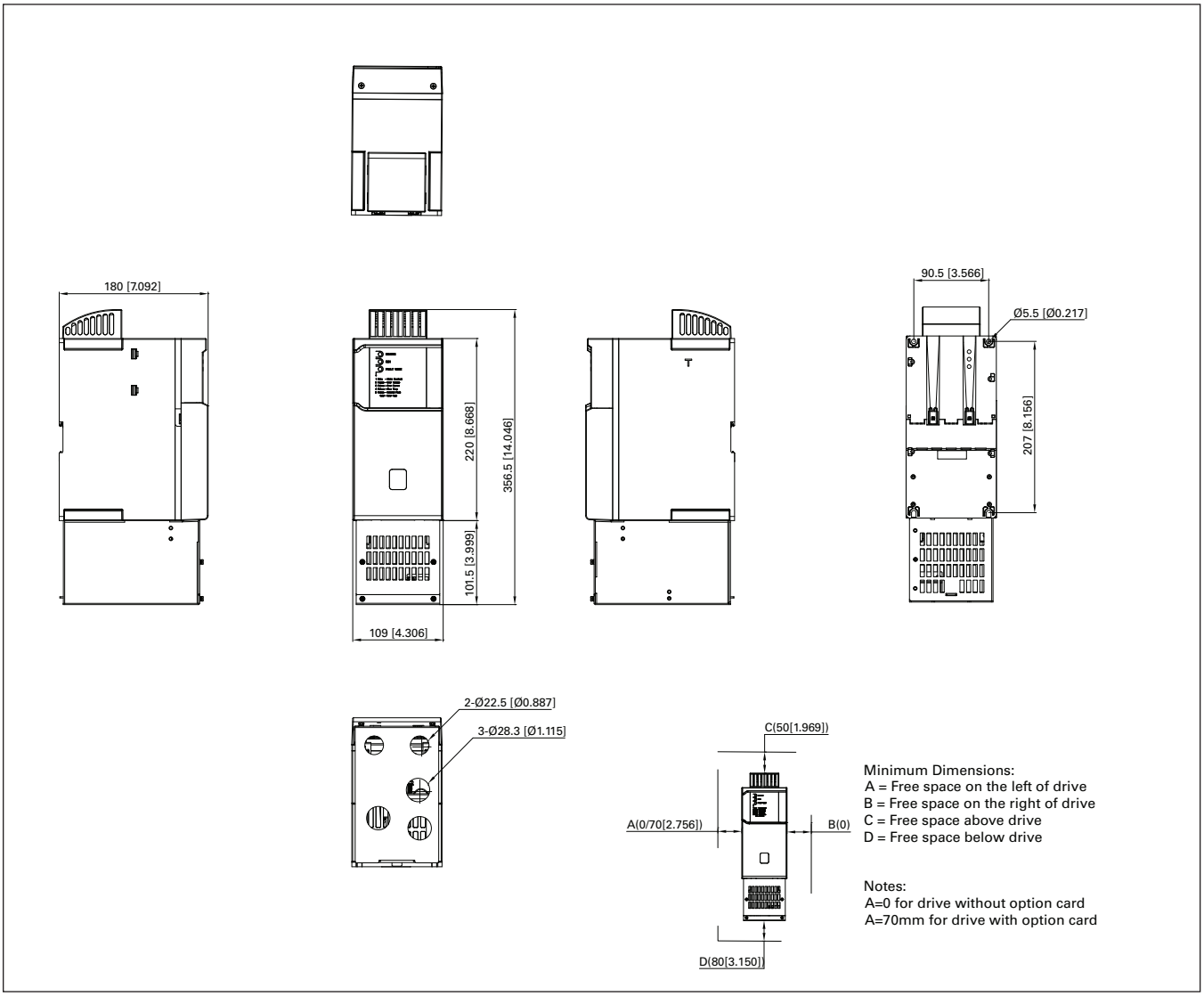

Approximate dimensions in inches (mm).

Figure 26. DM1 Pro FR3 with NEMA 1 kit dimension drawing.

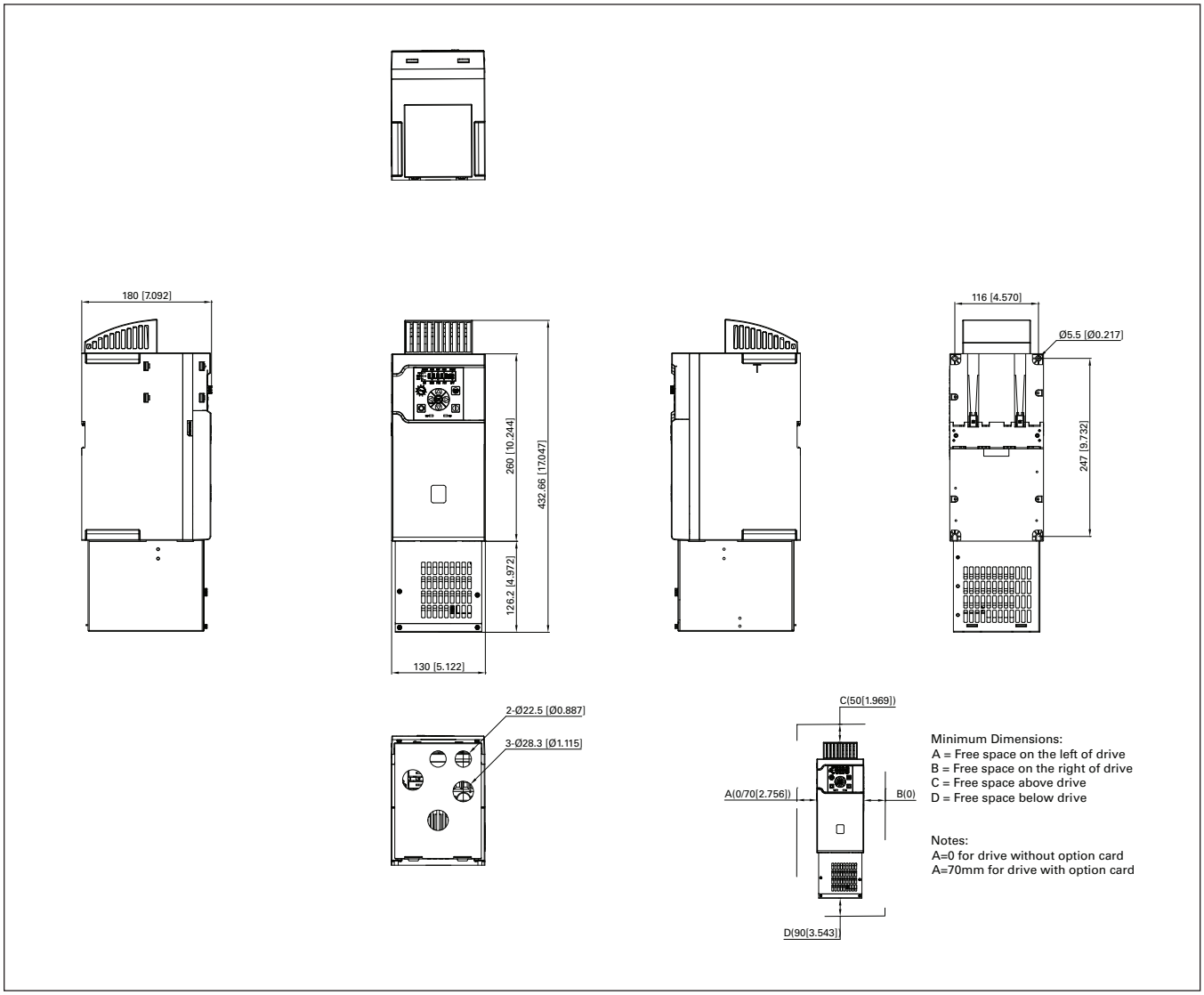

Approximate dimensions in inches (mm).

Figure 27. DM1 FR3 with NEMA 1 kit dimension drawing.

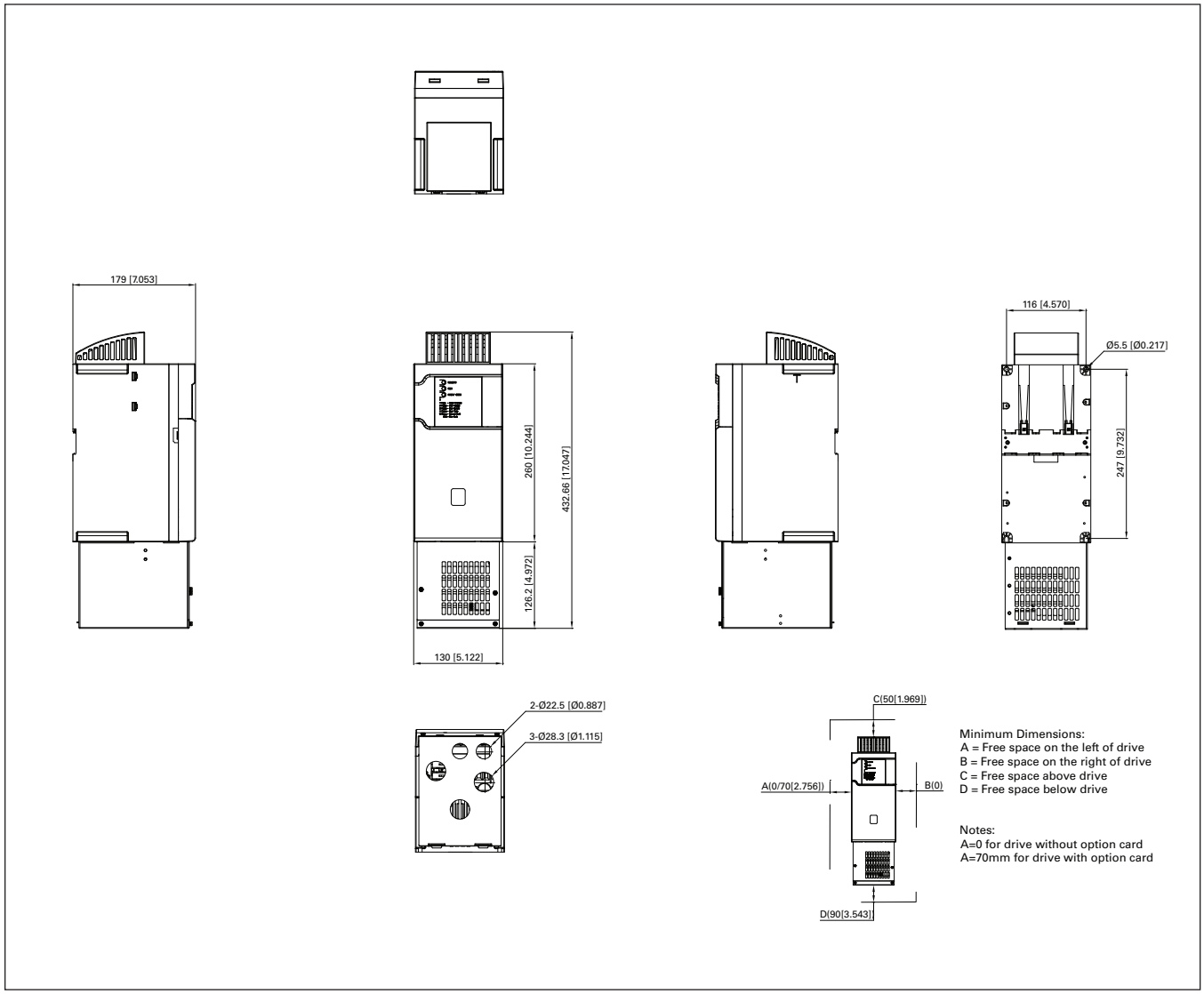

Approximate dimensions in inches (mm).

Figure 28. DM1 Pro FR4 with NEMA 1 kit dimension drawing.

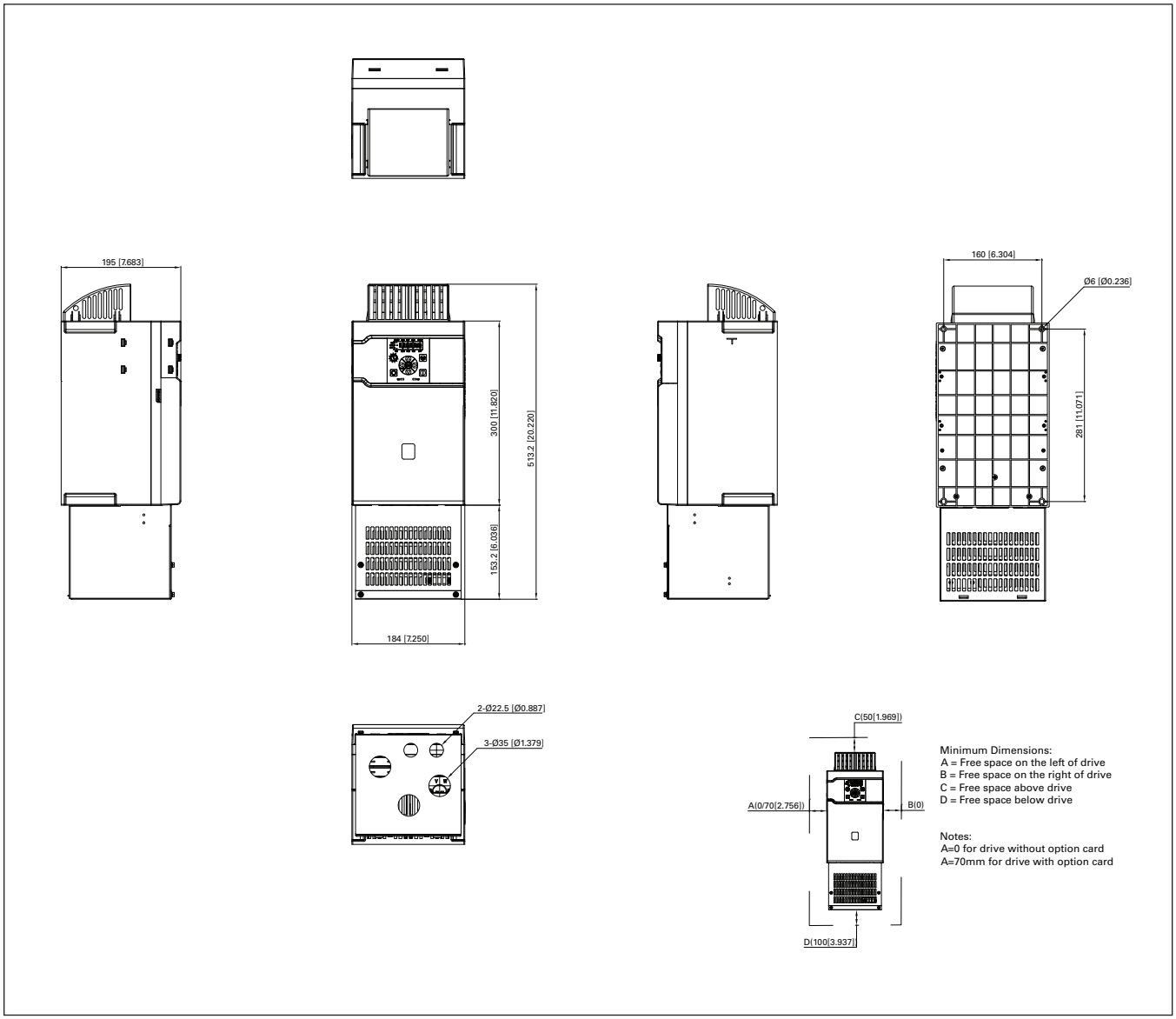

Approximate dimensions in inches (mm).

Figure 29. DM1 FR4 with NEMA 1 kit dimension drawing.

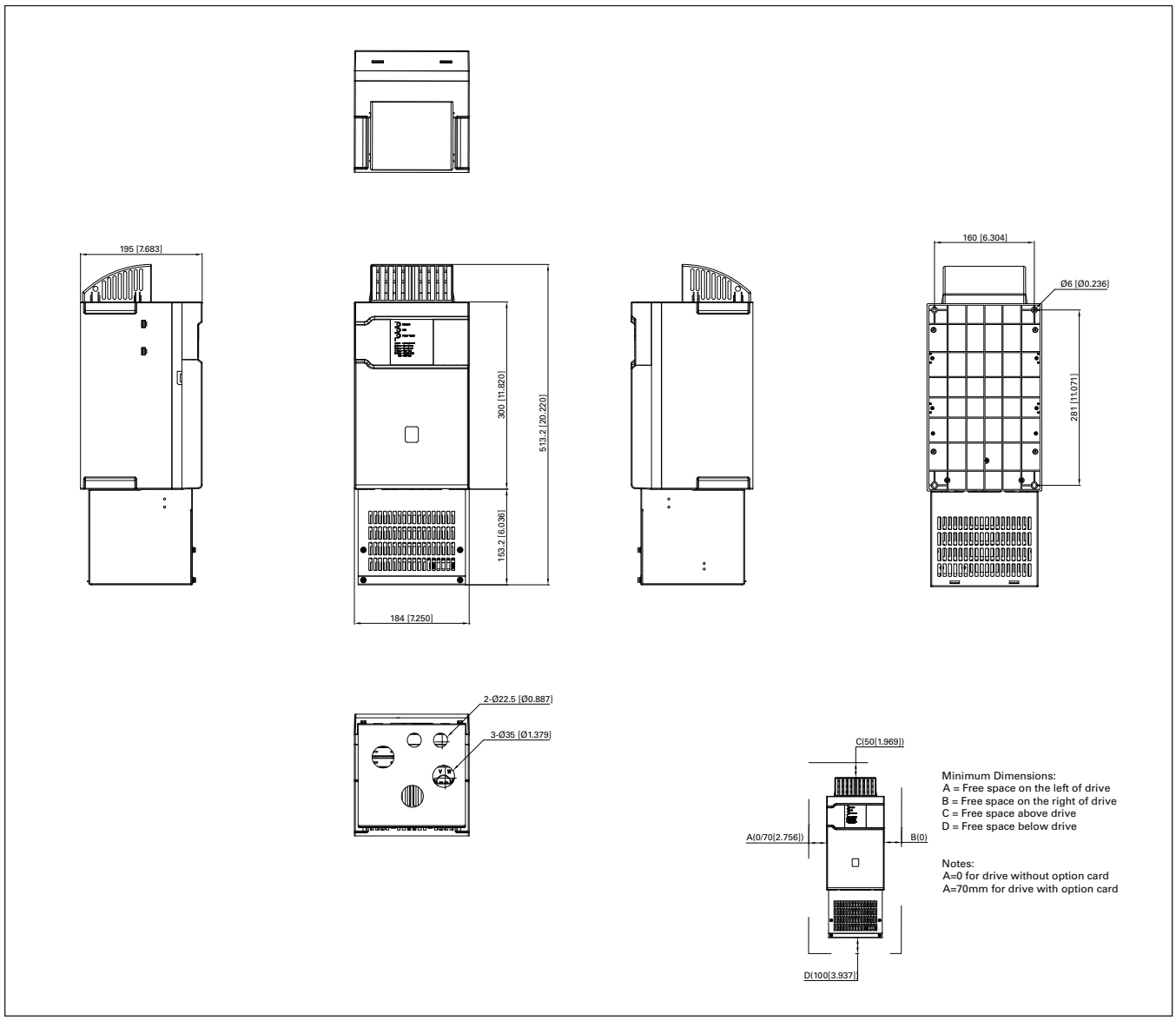

Appendix D—Safety instructions for UL and cUL

CAUTION

The UL and cUL compliance can be maintained only if this drive is installed according to the requirements of Appendix D —Safety Instructions for UL and cUL. Failure to follow these instructions may result in UL and cUL non-compliance.

UL Standards compliance

This drive is tested in accordance with UL61800-5-1 and CSA C22.2 No. 274-17 and is found to comply with these requirements. To ensure continued compliance when using this drive or when using it in combination with other equipment, meet the following conditions.

General

This drive shall be applied in accordance with the specifications detailed in **Appendix A**.

Overvoltage category

To comply with standard CSA C22.2 No. 274-17 requirement, the following applies to cUL applications:

- This drive should be installed in environment of Overvoltage Category III.
- **For 400 V series**: It is recommended that transient surge suppression be installed on the line side of this equipment and be rated 480 V (phase to ground), suitable for Overvoltage Category III, and shall provide protection for a rated impulse withstand voltage peak of 6 kV.
- **For 230 V series**: It is recommended that transient surge suppression be installed on the line side of this equipment and be rated 240 V (phase to ground), suitable for Overvoltage Category III, and provide protection for a rated impulse withstand voltage peak of 4 kV.
- **For 575 V series:** It is recommended that transient surge suppression be installed on the line side of this equipment and be rated 600 V (phase to ground), suitable for Overvoltage Category III, and shall provide protection for a rated impulse withstand voltage peak of 6 kV.

Motor overload and over-temperature protection

This drive provides solid-state motor overload protection. The solid-state motor overload protection limit is adjustable, see the drives application manual for more details.

Branch circuit short circuit protection

Integral solid-state short circuit protection does not provide branch circuit protection. Branch circuit protection must be provided in accordance with the National Electrical Code and any additional local codes.

230 V drive series are suitable for use on a circuit capable of delivering not more than:

- 100 kA, 240 Vac, when protected by any UL listed Class J, T, CF, or CC fuses;
- 100 kA, 240 Vac, when protected by any UL listed Inverse-time molded-case circuit breakers (only for open type);
- 65 kA, 240 Vac, when protected by any UL listed Type E combination motor controllers;
- 14/10 kA, 240 Vac, when protected by any UL listed miniature molded-case circuit breakers.

400 V drive series are suitable for use on a circuit capable of delivering not more than:

- 100 kA, 480 Vac, when protected by any UL listed Class J, T, CF, or CC fuses;
- 100 kA, 480 Vac, when protected by any UL listed Inverse-time molded-case circuit breakers (only for open type);
- 65 kA, 480Y/277 Vac, when protected by any UL listed Type E combination motor controllers;
- 14/10 kA, 480Y/277 Vac, when protected by any UL listed miniature molded-case circuit breakers.

Refer to Table 28 for recommended branch circuit protection devices ratings.

Field wiring

- The field installed conductors for this drive should be 75°C or higher copper wire.
- The enclosure openings provided for conduit connections in the field shall be closed by UL Listed conduit fittings with same type rating as the enclosure (Type 1).

Table 36. Connection sizes and torques①②.

			Output rating		Size and torque						
Input voltage	**Frame size**	**Drive catalog number**	**CT/I_H current amps**	**VT/I_L current amps**	**Power wire size AWG (mm²)**	**Power wire torque in.-lb (N·m)**	**Ground wire size AWG (mm²)**	**Ground wire torque in.-lb (N·m)**	**Control wire size AWG (mm²)**	**Control wire torque in.-lb (N·m) AI/DI ③**	**RO**
100 Vac to 120 Vac 50/60 Hz 1-phase	FR1	DM1-111D6…	1.6	2.5					28-16 (0.5-1.5)	1.73 (0.2)	4.5 (0.5)
		DM1-113D0…	3	4.8					28-16 (0.5-1.5)	1.73 (0.2)	4.5 (0.5)
	FR2	DM1-114D8…	4.8	6.9					28-16 (0.5-1.5)	1.73 (0.2)	4.5 (0.5)
		DM1-116D9…	6.9	7.8					28-16 (0.5-1.5)	1.73 (0.2)	4.5 (0.5)
200 Vac to 240 Vac 50/60 Hz 1-phase	FR1	DM1-121D6…	1.6	2.5					28-16 (0.5-1.5)	1.73 (0.2)	4.5 (0.5)
		DM1-123D0…	3	4.8					28-16 (0.5-1.5)	1.73 (0.2)	4.5 (0.5)
		DM1-124D8…	4.8	7.8					28-16 (0.5-1.5)	1.73 (0.2)	4.5 (0.5)
	FR2	DM1-127D8…	7.8	11					28-16 (0.5-1.5)	1.73 (0.2)	4.5 (0.5)
		DM1-12011…	11	17.5					28-16 (0.5-1.5)	1.73 (0.2)	4.5 (0.5)
	FR3	DM1-12017…	17.5	25.3					28-16 (0.5-1.5)	1.73 (0.2)	4.5 (0.5)
200 Vac to 240 Vac 50/60 Hz 3-phase	FR1	DM1-321D6…	1.6	2.5	14 (2.5)	4.4 (0.5)	14 (2.5)	7.1 (0.8)	28-16 (0.5-1.5)	1.73 (0.2)	4.5 (0.5)
		DM1-323D0…	3	4.8	14 (2.5)	4.4 (0.5)	14 (2.5)	7.1 (0.8)	28-16 (0.5-1.5)	1.73 (0.2)	4.5 (0.5)
		DM1-324D8…	4.8	7.8	14 (2.5)	4.4 (0.5)	12 (2.5)	7.1 (0.8)	28-16 (0.5-1.5)	1.73 (0.2)	4.5 (0.5)
		DM1-327D8…	7.8	11	12 (4)	4.4 (0.5)	10 (4)	7.1 (0.8)	28-16 (0.5-1.5)	1.73 (0.2)	4.5 (0.5)
	FR2	DM1-32011…	11	17.5	10 (6)	10.5 (1.2)	10 (6)	7.1 (0.8)	28-16 (0.5-1.5)	1.73 (0.2)	4.5 (0.5)
		DM1-32017…	17.5	25.3	8 (10)	10.5 (1.2)	10 (10)	7.1 (0.8)	28-16 (0.5-1.5)	1.73 (0.2)	4.5 (0.5)
	FR3	DM1-32025…	25.3	32.2	8 (10)	10.5 (1.2)	8 (10)	14.2 (1.6)	28-16 (0.5-1.5)	1.73 (0.2)	4.5 (0.5)
	FR4	DM1-32032…	32.2	48.3	4 (25)	33 (3.73)	8 (16)	14.2 (1.6)	28-16 (0.5-1.5)	1.73 (0.2)	4.5 (0.5)
		DM1-32048…	48.3	62.1	3 (35)	33 (3.73)	6 (16)	14.2 (1.6)	28-16 (0.5-1.5)	1.73 (0.2)	4.5 (0.5)
380 Vac to 480 Vac 50/60 Hz 3-phase	FR1	DM1-341D5…	1.5	2.2	14 (2.5)	4.4 (0.5)	14 (2.5)	7.1 (0.8)	28-16 (0.5-1.5)	1.73 (0.2)	4.5 (0.5)
		DM1-342D2…	2.2	4.3	14 (2.5)	4.4 (0.5)	14 (2.5)	7.1 (0.8)	28-16 (0.5-1.5)	1.73 (0.2)	4.5 (0.5)
		DM1-344D3…	4.3	5.6	14 (2.5)	4.4 (0.5)	14 (2.5)	7.1 (0.8)	28-16 (0.5-1.5)	1.73 (0.2)	4.5 (0.5)
		DM1-345D6…	5.6	7.6	14 (2.5)	4.4 (0.5)	10 (2.5)	7.1 (0.8)	28-16 (0.5-1.5)	1.73 (0.2)	4.5 (0.5)
	FR2	DM1-347D6…	7.6	12	12 (4)	10.5 (1.2)	10 (4)	7.1 (0.8)	28-16 (0.5-1.5)	1.73 (0.2)	4.5 (0.5)
		DM1-34012…	12	16	10 (6)	10.5 (1.2)	10 (6)	7.1 (0.8)	28-16 (0.5-1.5)	1.73 (0.2)	4.5 (0.5)
		DM1-34016…	16	23	8 (10)	10.5 (1.2)	10 (10)	7.1 (0.8)	28-16 (0.5-1.5)	1.73 (0.2)	4.5 (0.5)
	FR3	DM1-34023..	23	31	8 (10)	10.5 (1.2)	8 (10)	14.2 (1.6)	28-16 (0.5-1.5)	1.73 (0.2)	4.5 (0.5)
	FR4	DM1-34031…	31	38	6 (16)	33 (3.73)	8 (16)	14.2 (1.6)	28-16 (0.5-1.5)	1.73 (0.2)	4.5 (0.5)
		DM1-34038…	38	46	4 (25)	33 (3.73)	8 (16)	14.2 (1.6)	28-16 (0.5-1.5)	1.73 (0.2)	4.5 (0.5)
525 Vac to 600 Vac 50/60 Hz 3-phase	FR2	DM1-354D5…	4.5	7.5					28-16 (0.5-1.5)	1.73 (0.2)	4.5 (0.5)
		DM1-357D5…	7.5	10					28-16 (0.5-1.5)	1.73 (0.2)	4.5 (0.5)
		DM1-35010…	10	13.5					28-16 (0.5-1.5)	1.73 (0.2)	4.5 (0.5)
	FR3	DM1-35013…	13.5	18					28-16 (0.5-1.5)	1.73 (0.2)	4.5 (0.5)
	FR4	DM1-35018…	18	22					28-16 (0.5-1.5)	1.73 (0.2)	4.5 (0.5)
		DM1-35022…	22	27					28-16 (0.5-1.5)	1.73 (0.2)	4.5 (0.5)

Notes:

① Line and motor cable size is selected according to UL 61800-5-1 for copper conductor rated 75°C. Use only with copper wire rated 75°C here. Size requirements for other different wire types are defined in the National Electrical Code®, ANSI/NFPA® 70.

② Earthing conductor size is determined by the maximum overcurrent device rating used ahead of the drive according to UL 61800-5-1.

③ If power cubes or bypass are used, a UL listed Class J, T, CF, CC or equivalent fuse is recommended.

Appendix E—STO function

Description of safety function

Safety function and safe state

The safe torque off (STO) function of DM1 series AC drive is implemented only by hardware and no software is involved to perform the STO function.

The STO function is available for operator to turn off the motor torque. It is intended to be used in the safety related applications up to SIL 2 / SIL CL 2 acc. to IEC 61800-5-2, IEC 61508 and IEC 62061, and up to Cat. 3 / PL d acc. to ISO 13849-1.

Safety function

The power that can cause rotation (or motion in the case of a linear motor) shall be switched off from the motor when demanded.

Safe state

The safe state is when the power supply of the motor is switched off.

System response time

The time from when the operator presses the emergency stop button to when the motor power supply switch is turned off is ≤ 1ms.

STO input signal requirement

The two STO inputs can not be exactly synchronized, STO fault will not be triggered if the two STO inputs become consistent within 200 ms.

Table 37. Safety-related parameters.

Operation mode		FR1-4
Operation mode		High demand
Safety integrity level		SIL 2 / SIL CL 2
Systematic capability		SC 2
Safety architecture		1oo1 and 1oo2 mixed
Category		3
Performance level		d
System type		B
HFT	1oo1 part	0
	1oo2 part	1
SFF of each element	1oo1 part	> 99%
	1oo2 part	> 60%
PFH		8.26E-10
PFD		6.76E-05
MTTFd		1041 years (high)
Proof Test Interval (PTI)		20 years
MRT		0 hour
MTTR		0 hour
λ (total failures)		598.30 FIT
λ_S (safe failures)		443.06 FIT
λ_{DD} (dangerous detected failures)		107.11 FIT
λ_{DU} (dangerous undetected failures)		54.93 FIT

Note: 1 FIT = 10^{-9}/h.

All the previously mentioned safety-related parameters are calculated based on the assumptions:

- Failure rate of each component is based on the Siemens SN29500 database;
- Component failure rates are constant over the life of the device;
- Operating at a maximum ambient temperature of 60°C;
- The equal distribution is used for the failure modes ratio of each component.

INFORMATION

The parameters mentioned above are calculated by Eaton without considering failure rates of external devices e.g. buttons, power supply, etc.

⚠ WARNING

The STO function shall be triggered at least once a year.

Safety architecture and reliability block diagram

Figure 30. Functional block diagram.

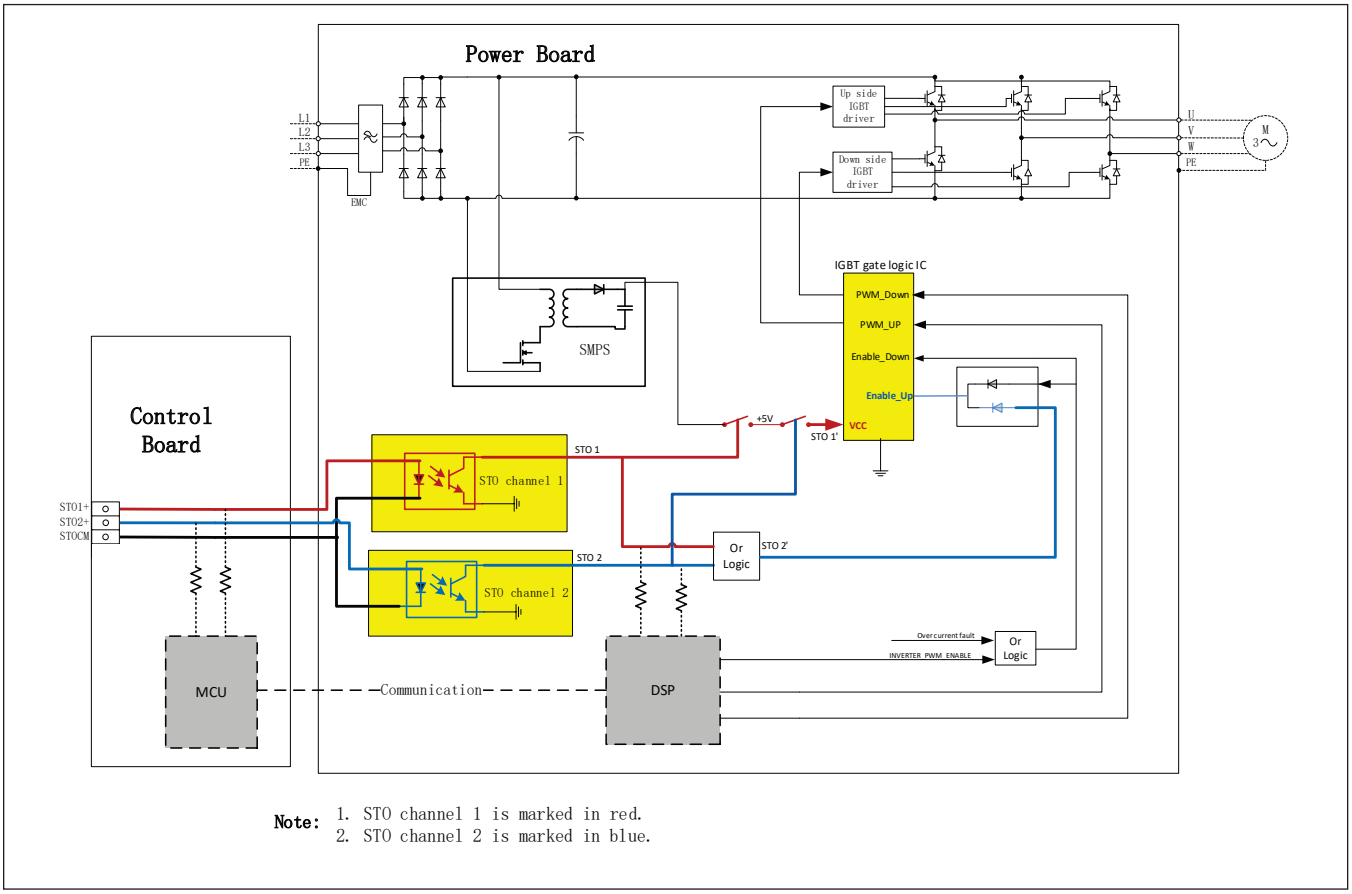

Figure 31. Reliability block diagram.

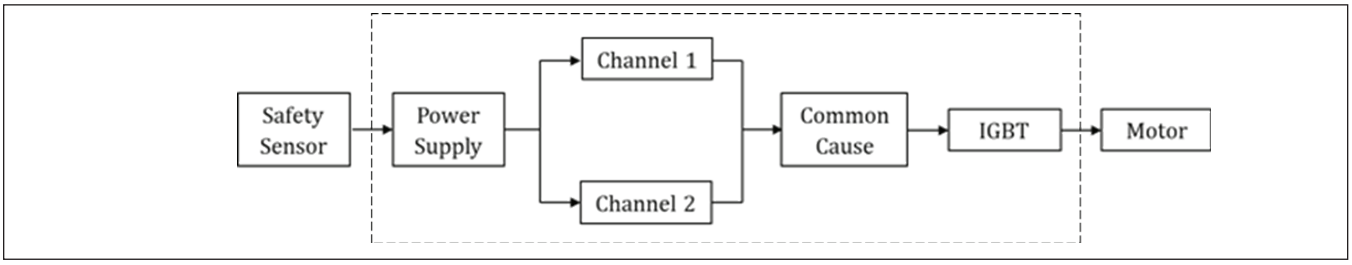

Power supply and input/output

Power supply input voltage	230V series: 150–450 Vdc
	480V series: 300–880 Vdc
STO activation	STO1/STO2: 0-1.5 Vdc
STO deactivation	STO1/STO2: 16-28 Vdc

Environmental and EMC conditions

Environmental	
Mains supply system	TN, TT and IT systems (including corner-earthed system)
Overvoltage	Overvoltage category III
Pollution degree	Pollution degree 2
Ambient operating temperature	-10°C to +40°C rated VT (variable torque) (110% OL for 1 min per 10 mins) -10°C to +50°C rated CT (constant torque) (150% OL for 1 min per 10 mins) Up to +60°C with derating Cold weather function can be enabled to extend the lower range to -20°C
Storage temperature	–40 °F (–40 °C) to 158 °F (70 °C)
Relative humidity	0 to 95% RH, non-condensing, non-corrosive, no directly dripping
Altitude	100% load capacity (no derating) up to 1,000m; 1% derating for each 100m up to 2,000m (UL listing); up to 4,000m (without UL listing)
Vibration IEC 60068-2-6	Power supply connected (no package) Keyhole mounting and DIN rail mounting Sinusoidal motion 10 Hz ≤ f ≤57 Hz: 0.075 mm amplitude 57 Hz > f ≤ 150 Hz: 1g 1oct/min, 10 sweep cycles per axis on each of 3 mutually perpendicular axes
Shock IEC 60068-2-27	Power supply connected (no package) Keyhole mounting and DIN Rail mounting Half sine pulse motion Peak acceleration 15g with duration 11ms Total 18 shocks for 3 mutually perpendicular axes and 6 directions
Enclosure class	IP20 / UL open type IP20 / NEMA 1 / UL Type 1 with NEMA 1 kit installed
EMC	
Immunity	EN 61800-3:2004+A1:2012, IEC 61800-3:2017, 2nd environment, IEC 61800-5-2:2016, IEC/EN 61326-3-1:2017
Radiated emissions	EN 61800-3:2004+A1:2012, IEC 61800-3:2017, 2nd environment, Category 2
Conducted emissions	EN 61800-3:2004+A1:2012, IEC 61800-3:2017, 2nd environment, Category 2

INFORMATION

External filter shall be used for non-EMI version drives to keep CE EMC compliance. Refer to installation manual for detailed information of external filter. If an external filter type other than recommended in the manual is used, the CE EMC compliance shall be reconfirmed first. Please contact the factory or your local Eaton sales representative if necessary.

Applicable standards

IEC 61800-5-2:2016
Adjustable speed electrical power drive systems
Part 5-2: Safety requirements—functional

IEC 61800-5-1: 2007+A1:2016 (as far as applicable)
Adjustable speed electrical power drive systems
Part 5-1: Safety requirements – Electrical, thermal and energy

IEC 61800-3:2017 (as far as applicable)
Adjustable speed electrical power drive systems
Part 3: EMC requirements and specific test methods

IEC 61326-3-1:2017
Electrical equipment for measurement, control and laboratory use – EMC requirements
Part 3-1: Immunity requirements for safety-related systems and for equipment intended to perform safety-related functions (functional safety) – General industrial applications

IEC 62061:2015
Safety of machinery – Functional safety of safety-related electrical, electronic and programmable electronic control systems

ISO 13849-1:2015
Safety of Machinery – Safety Related Parts of Control Systems
Part 1: General principles for design

IEC 61508, parts 1-7:2010
Functional safety of electrical/electronic/programmable electronic safety-related systems

Requirement for installation, commission, maintenance

A three-pin terminal block in control board (STO in **Figure 32**) is used for customer to connect emergency stop switch.

When finished the installation, the STO function shall be verified. Refer to **Figure 33** for the detailed wiring method. The emergency stop switch for STO shall be closed state normally.

The STO function shall be verified according to following steps:

- Apply main power to DM1.
- Run the motor and wait until the motor operating stably.
- Open the switch of STO1 or STO2, both "STO Fault" and "Safety Torque Off" shall be triggered and the motor shut down. Fault codes are FC 23 and FC 66.
- Closed STO1 and STO2 switches.
- Restart motor and wait until the motor operating stably.
- Open the switches of STO1 and STO2 at the same time, only "Safety Torque Off" shall be triggered and the motor shut down. Fault code is FC 66.
- Closed STO1 and STO2 switches. Test finished.

Notes:

- STO fault indicates two different fault types. One is the drive internal circuit fault and the other is the case that two STO input signals are not consistent within 200 ms.
- If the customer needs more detailed information or the test result is mismatched, please contact the factory or your local Eaton sales representative.

Figure 32. STO terminal block in DM1 control board.

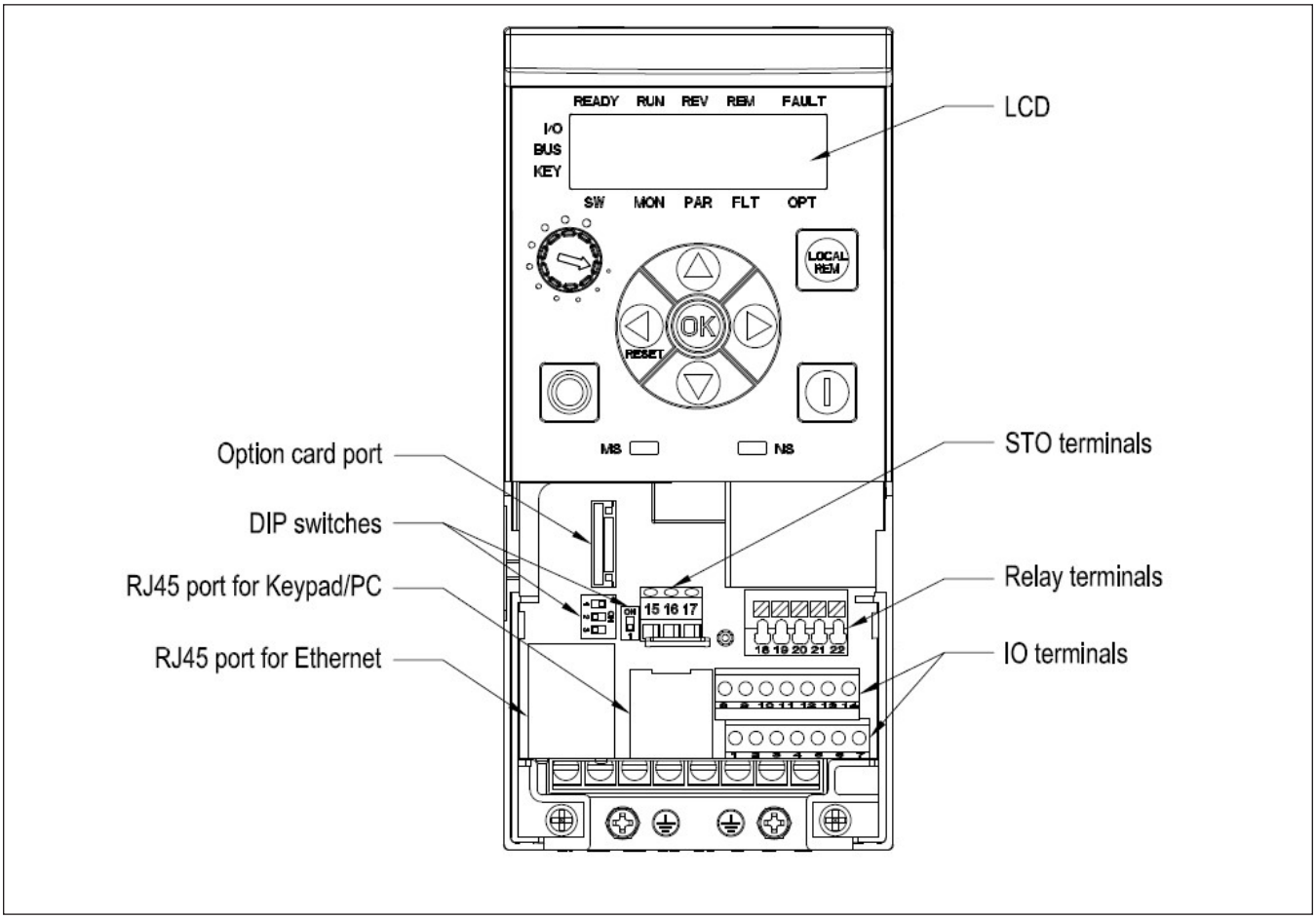

The STO terminal block shall be short circuited by jumper if user does not need STO function.

If the function is used by customer, the STO terminal block shall be connected to emergency stop switch.

The STO function needs to be always on, which means the idle-current principle shall be followed by the end user.

Fault exclusion measures against short circuit fault between STO1/STO2 and power supply 24VDC must be implemented at application level, according to applicable requirement/ standards e.g. ISO 13849-2:2012.

⚠ WARNING

- **Any circuit connected to the STO terminal block shall be SELV or PELV circuit.**
- **STO1 and STO2 shall be both connected with the independent output of the safety elements.**
- **The STO terminal block is fixed connection and cannot be disconnected without tool. Installation manual defines the control wiring stripping length to ensure no bare conductor exposed after wiring.**
- **The safety function STO is not equivalent to the safety function "safe off" of IEC 60204-1:2016, since it does not provide any galvanic insulation. This means that the motor terminals can still have dangerous voltage when in STO state.**

Figure 33. Thermistor STO dry contact wiring diagram.

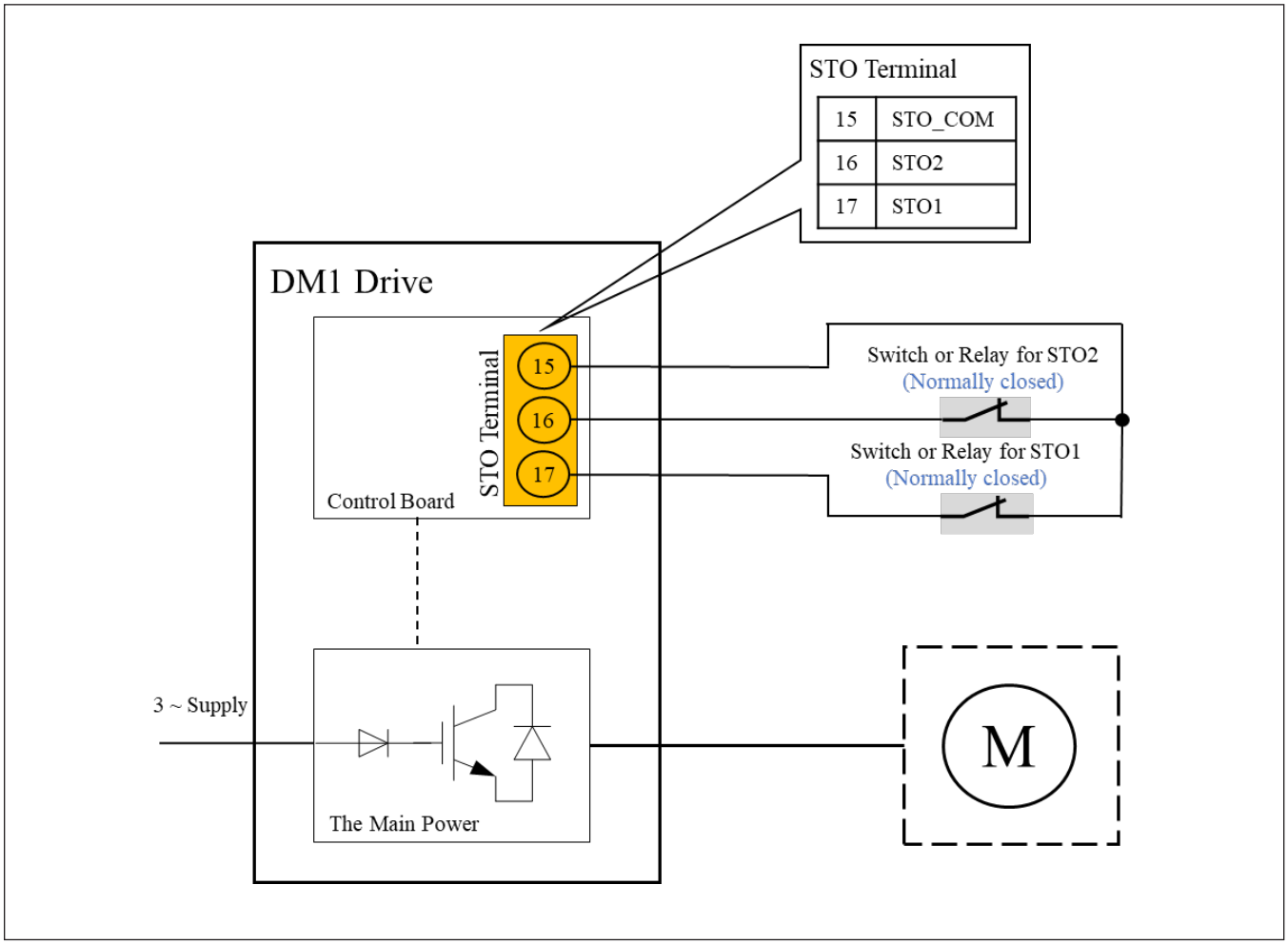

Requirements of proof test

This device shall be subjected to a proof test at least once every 20 years. Please contact the factory or your local Eaton sales representative.

Appendix F—UL Certificate of Compliance and CE Declaration of Conformity

Notes:

UL Certificate of Compliance

Certificate number: E134360

Report reference: E354803

Issued to: Eaton Corp.

In accordance with UL 61800-5-1 - Adjustable Speed Electrical Power Drive Systems – Part 5-1: Safety Requirements – Electrical, Thermal and Energy - Edition 1 and CSA C22.2 No. 274-17 - Adjustable Speed Drives – Edition 2.

See UL report for additional details.

CE Declaration of Conformity

In accordance with the following standards:

2014/35/EU Low Voltage Directive;

2014/30/EU EMC Directive;

2011/65/EU RoHS Directive;

2006/42/EC European Machinery Directive.

Based on compliance with European standard(s):

EN 61800-5-1:2007+A1:2017;

EN 61800-3:2018;

EN 50581:2012;

EN 60204-1:2018;

EN 61800-5-2:2016;

EN ISO 13849-1:2015;

EN 61508, Part 1-7:2010;

EN 61326-3-1:2017;

EN 62061:2015.

Notes:

Eaton
1000 Eaton Boulevard
Cleveland, OH 44122
United States
Eaton.com

© 2020 Eaton
All Rights Reserved
Printed in USA
Publication No.MN040060EN / TBG001507
September 2020

Eaton is a registered trademark.

All trademarks are property
of their respective owners.

Powering Business Worldwide