ACH550

User’s Manual
ACH550-01 Drives

ACH550 Drive manuals

GENERAL MANUALS

ACH550-01 User's Manual
3AFE68258537 (English)

ACH550-02 User's Manual
3AFE68262674 (English)

ACH550-UH User's Manual
3AUA0000004092 (English)

- Safety
- Installation
- Start-up
- Diagnostics
- Maintenance
- Technical data

HVAC Info Guide CD
3AFE68338743 (English)

- Detailed product description
  - Technical product description including dimensional drawings
  - Cabinet mounting information including power losses
  - Software and control
  - User interfaces and control connections
  - Complete options descriptions
  - Spare parts
  - Etc.
- Practical engineering guides
  - PID & PFA engineering guides
  - Dimensioning and sizing guidelines
  - Diagnostics and maintenance information
  - Etc.

OPTION MANUALS

(delivered with optional equipment)

BACnet Protocol
3AUA0000004591 (English)

Embedded Fieldbus (EFB) Control
3AFE68320658 (English)

MFDT-01 FlashDrop User's Manual
3AFE68591074 (English)

OREL-01 Relay Output Extension Module User's Manual
3AUA0000001935 (English)

RETA-01 Ethernet Adapter Module User's Manual
3AFE64539736 (English)

RLON-01 LonWorks Adapter Module User's Manual
3AFE64798693 (English)

Typical contents

- Safety
- Installation
- Programming/Start-up
- Fault tracing
- Technical data

MAINTENANCE MANUALS

Guide for Capacitor Reforming in ACS50, ACS55, ACS150, ACS350, ACS550 and ACH550
3AFE68735190 (English)

1. Contents of this manual
2. Preparing for installation
3. Installing the drive
4. Start-up and control panel
5. Application macros and wiring
6. Real-time clock and timed functions
7. Serial communications
8. Parameter listing and descriptions
9. Diagnostics and maintenance
10. Technical data
Index

3AFE68258537 REV E
EN
EFFECTIVE: 20.08.2007

Table of contents

1. Contents of this manual 5

What this chapter contains 5
Compatibility 5
Intended use 5
Intended audience 5
Use of warnings and notes 6
Safety instructions 6
Drive package 9
Lifting the drive 10
Product and service inquiries 11
Product training 11
Providing feedback on ABB Drives manuals 11

2. Preparing for installation 13

What this chapter contains 13
Drive identification 14
Frame size 17
Motor identification 19
Motor compatibility 21
Suitable environment and enclosure 22
Suitable mounting location 23
Wiring and EMC considerations 26
Cabling instructions 28
Input power (mains) cables 28
Motor cables 28
Control cables 32
Tools required 35
Checklist for installation preparations 36

3. Installing the drive 37

What this chapter contains 37
Preparing the mounting location 37
Removing front cover (IP54) 38

Removing front cover (IP21) 39
Mounting the drive (IP54)..... 40
Mounting the drive (IP21)..... 41
Overview of wiring installation (R1…R4) 42
Overview of wiring installation (R5…R6) 43
Power wiring (IP54)..... 44
Control wiring (IP54) 47
Power wiring (IP21)..... 48
Control wiring (IP21) 51
Check installation..... 53
Re-install cover (IP54) 55
Re-install cover (IP21) 56
Apply power 57

4. Start-up and control panel..... 59

What this chapter contains..... 59
Control panel compatibility..... 59
HVAC control panel (ACH-CP-B) features..... 59
Start-up 60
Modes 63
Output (Standard display) mode 64
Parameters mode 66
Assistants mode..... 68
Changed parameters mode 72
Drive parameter backup mode..... 73
Time and date mode 79
I/O settings mode..... 82
Fault logger mode 83

5. Application macros and wiring 85

What this chapter contains..... 85
Applications..... 85
Selecting an application macro 86
Restoring defaults 87
1. HVAC default 88
2. Supply fan 90
3. Return fan 92
4. Cooling tower fan 94

5. Condenser 96
6. Booster pump 98
7. Pump alternation..... 100
8. Internal timer 102
9. Internal timer with constant speeds / Powered roof ventilator 104
10. Floating point 106
11. Dual setpoint PID 108
12. Dual setpoint PID with constant speeds 110
13. E-bypass (USA only) 112
14. Hand control 114
Connection example of a two-wire sensor 116

6. Real-time clock and timed functions 117

What this chapter contains 117
Real-time clock and timed functions 117
Using the timer..... 118
Example of timer use 125

7. Serial communications 129

What this chapter contains 129
System overview..... 130
Embedded fieldbus (EFB)..... 132
Fieldbus adapter (EXT FBA)..... 137
Drive control parameters 143
Fault handling 152

8. Parameter listing and descriptions 155

What this chapter contains 155
Parameter groups 155
Complete parameter list..... 314

9. Diagnostics and maintenance..... 351

What this chapter contains 351
Diagnostics displays 352
Correcting faults..... 353
Fault resetting 362

History 363
Correcting alarms 363
Maintenance intervals 368
Heatsink 369
Main fan replacement 369
Internal enclosure fan replacement 372
Capacitors 373
Control panel 374

10. Technical data 375

What this chapter contains 375
Ratings 375
Input power (mains) cable, fuses and circuit breakers 381
Cable terminals 388
Input power (mains) connection 388
Motor connection 389
Control connections 393
Efficiency 397
Cooling 397
Dimensions and weights 399
Ambient conditions 416
Materials 417
Applicable standards 418
CE marking 418
C-Tick marking 419
UL marking 419
IEC/EN 61800-3 (2004) Definitions 420
Compliance with the IEC/EN 61800-3 (2004) 420
Equipment warranty and liability 422
Product protection in the USA 423
Contact information 424

Index 429

Contents of this manual

What this chapter contains

This chapter contains the safety instructions which you must follow when installing, operating and servicing the drive. If ignored, physical injury or death may follow, or damage may occur to the drive, the motor or driven equipment. Read the safety instructions before you work on the unit.

This chapter also contains an introduction to the contents of this manual.

At the end of the chapter you find instructions on how to make inquiries about products and service, find information on product training and give feedback on the drive manuals.

Compatibility

This manual covers ACH550-01 drives. For ACH550-UH drive data and instructions, please refer to *ACH550-UH HVAC Drives User's Manual* [3AUA0000004092 (English)].

The manual is compatible with the ACH550-01 drive firmware version 3.11d or later. See parameter 3301 FIRMWARE on page *243*.

Intended use

The ACH550 and the instructions in this manual are intended for use in HVAC applications. The macros should only be applied to the applications defined in the respective section.

Intended audience

This manual is intended for personnel who install, commission, operate and service the drive. Read the manual before working on the drive. The reader is expected to know the fundamentals of electricity, wiring, electrical components and electrical schematic symbols.

Use of warnings and notes

There are two types of safety instructions throughout this manual:

- Warnings caution you about conditions which can result in serious injury and death and/or damage to the equipment. They also tell you how to avoid the danger.
- Notes draw attention to a particular condition or fact, or give information on a subject.

The warning symbols are used as follows:

Danger; electricity warns of high voltage which can cause physical injury and/or damage to the equipment.

General danger warns about conditions, other than those caused by electricity, which can result in physical injury and/or damage to the equipment.

Safety instructions

WARNING! The ACH550 should ONLY be installed by a qualified technician.

WARNING! Even when the motor is stopped, dangerous voltage is present at the power circuit terminals U1, V1, W1 and U2, V2, W2, and, depending on the frame size, UDC+/BRK+ and UDC-/BRK-.

WARNING! Dangerous voltage is present when input power is connected. After disconnecting the supply, wait at least 5 minutes before removing the cover. To check, measure for zero voltage at the DC terminals, which are, depending on the frame size, UDC+/BRK+ and UDC-/BRK-.

WARNING! Even when the power is switched off from the input terminals of the ACH550, there may be dangerous voltage (from external sources) on the terminals of the relay outputs RO1…RO3 and, if the relay extension board is included in the installation, RO4…RO6.

WARNING! When the control terminals of two or more drive units are connected in parallel, the auxiliary voltage for these control connections must be taken from a single source which can either be one of the units or an external supply.

WARNING! If a drive whose EMC filter is not disconnected is installed on an IT system [an ungrounded power system or a high resistance-grounded (over 30 ohms) power system], the system will be connected to earth potential through the EMC filter capacitors of the drive. This may cause danger or damage the drive.

If a drive whose EMC filter is not disconnected is installed on a corner grounded TN system, the drive will be damaged.

Note: When the EMC filter is disconnected, the drive is not EMC compatible.

For disconnecting the EMC filter, see pages *42* (frame sizes R1…R4) and *43* (frame sizes R5…R6) in chapter *Installing the drive*.

WARNING! The ACH550 is not a field repairable unit. Never attempt to repair a malfunctioning unit; contact the factory or your local Authorized Service Centre for replacement.

WARNING! The ACH550 will start up automatically after an input voltage interruption if the external run command is on.

WARNING! The heat sink may reach a high temperature. See chapter *Technical data*.

WARNING! Do not control the motor with an AC contactor or disconnecting device (disconnecting means); use instead the control panel start and stop keys or external commands (I/O or fieldbus). The maximum allowed number of charging cycles of the DC capacitors (i.e. power-ups by applying power) is six in ten minutes.

Note: For more technical information, contact your local ABB representative (see page *424*).

Drive package

After opening the package, check that the following items are included:

- ACH550 drive (1)
- IP21: box containing clamps and connection box (2),
  IP54: box containing top cover
- box containing control panel (operator keypad) ACH-CP-B and panel connector (3)
- cardboard mounting template (4)
- user’s manual (5)
- warning stickers.

The figure below shows the contents of the drive package.

Lifting the drive

The figure below shows how to lift the drive.

Note: Lift the drive only from the metal chassis.

Product and service inquiries

Address any inquiries about the product to your local ABB representative, quoting the type code and serial number of the unit in question. A listing of ABB sales, support and service contacts can be found by navigating to www.abb.com/drives and selecting *Drives – Sales, Support and Service network*.

Product training

For information on ABB product training, navigate to www.abb.com/drives and select *Drives – Training courses*.

Providing feedback on ABB Drives manuals

Your comments on our manuals are welcome. Go to www.abb.com/drives and select *Document Library – Manuals feedback form (LV AC drives)*.

Preparing for installation

What this chapter contains

This chapter contains instructions for preparing for the installation of the drive. It contains the drive identification, wiring and EMC guidelines and a list of tools necessary for the installation.

Note: The installation must always be designed and made according to applicable local laws and regulations. ABB does not assume any liability whatsoever for any installation which breaches the local laws and/or other regulations. Furthermore, if the recommendations given by ABB are not followed, the drive may experience problems that the warranty does not cover.

Drive identification

IP54 labels

The location and the contents of the labels for the IP54 degree of protection are shown in the figure below.

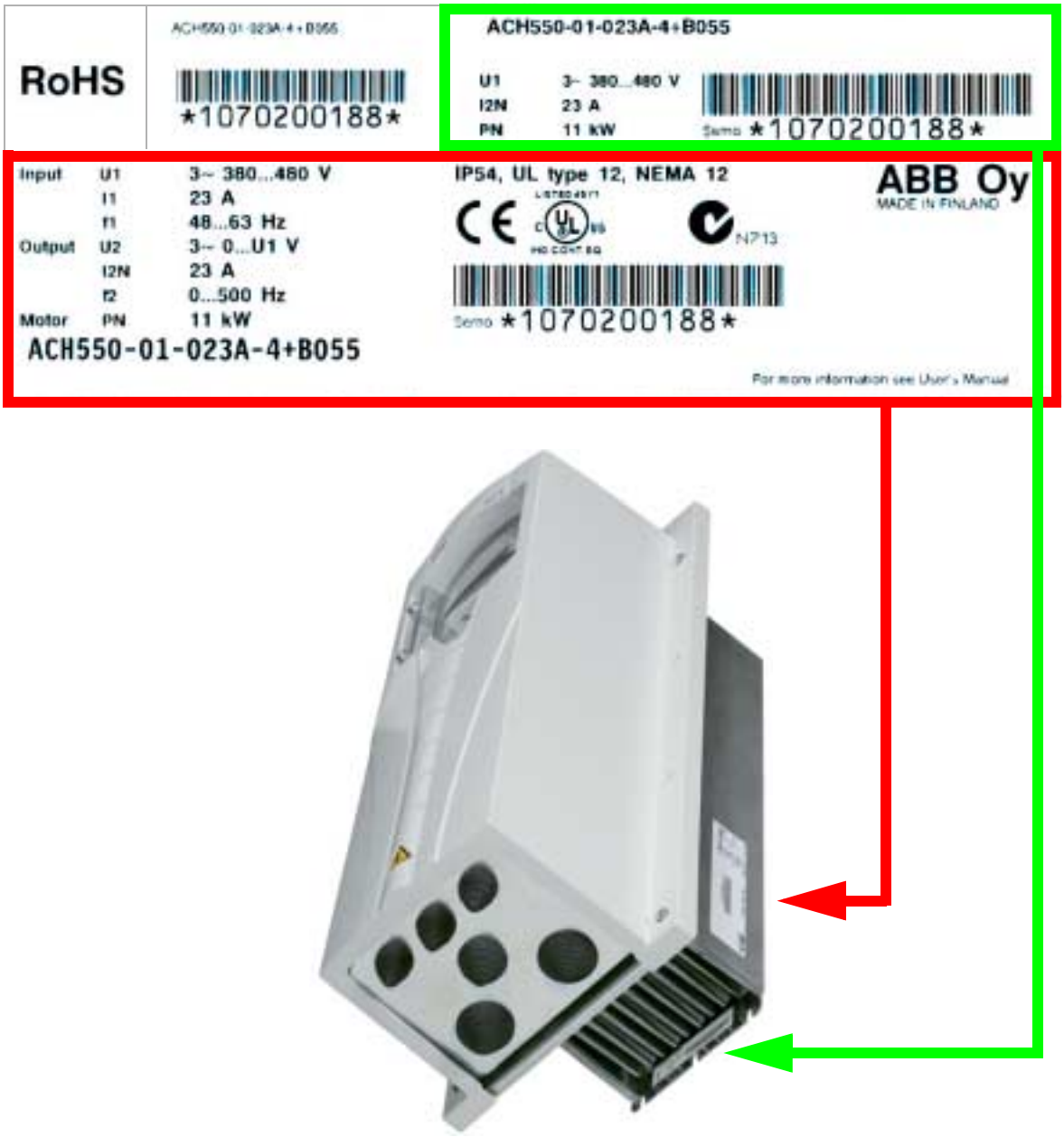

Note: The location of the labels may vary between different frame sizes.

IP21 labels

The location and the contents of the labels for the IP21 degree of protection are shown in the figure below.

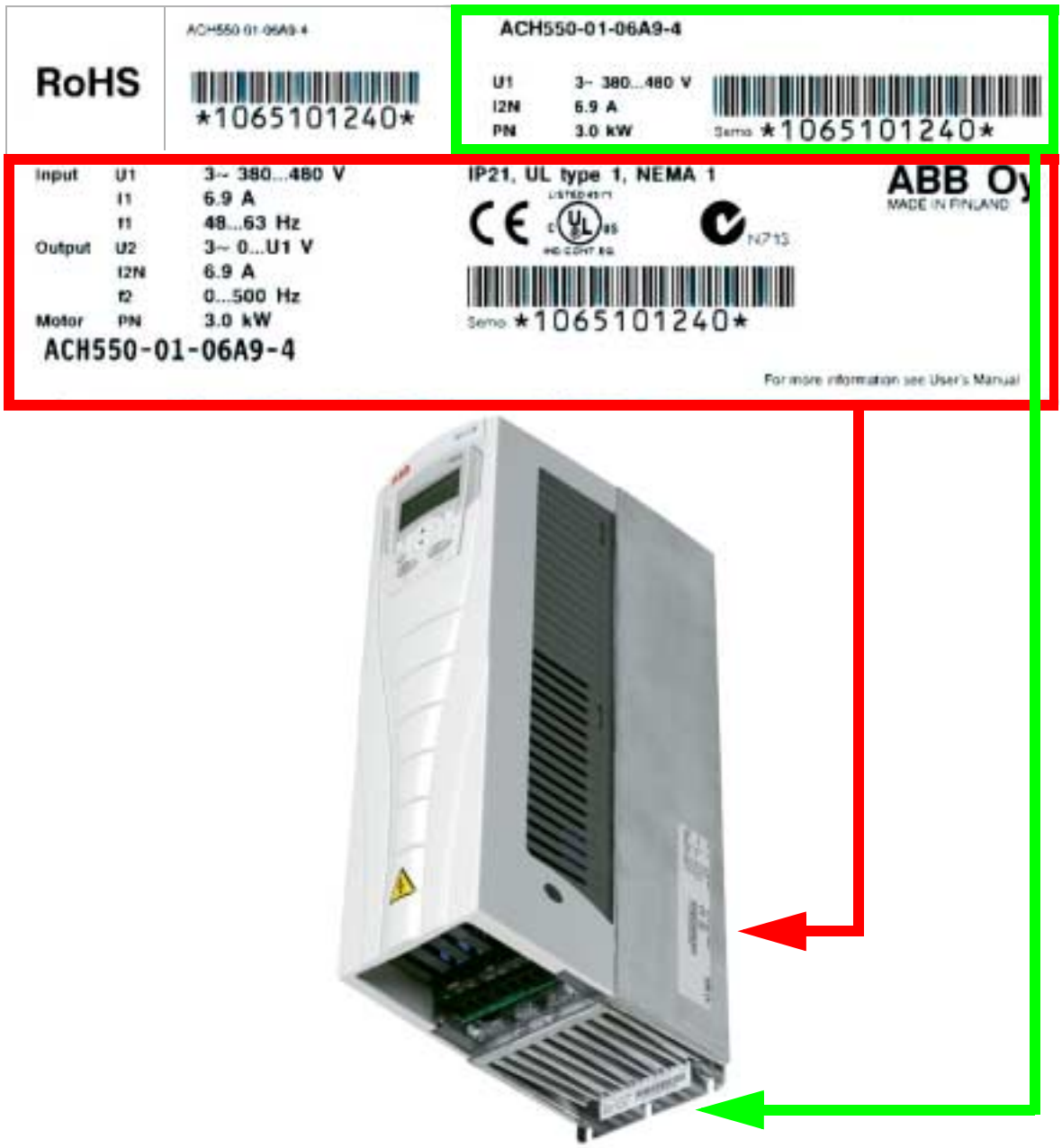

Note: The location of the labels may vary between different frame sizes.

Type code

The contents of the drive type code shown on the labels are described below.

ACH550-01-08A8-4+…

AC, HVAC Drive – 550 product series

Construction (region specific)
01 = Setup and parts specific to IEC installation and compliance
UH = Setup and parts specific to US installation and NEMA compliance

Output current rating
08A8 = 8.8 A, see the table in section *Frame size* on page *17* for details

Voltage rating
2 = 208…240 V AC
4 = 380…480 V AC

Degree of protection
No specification = IP21
B055 = IP54

Serial number

The format of the drive serial number shown on the labels is described below.

Serial number is of format CYYWWXXXXX, where

C:	Country of manufacture
YY:	Year of manufacture
WW:	Week of manufacture; 01, 02, 03, … for week 1, week 2, week 3, …
XXXXX:	Integer starting every week from 0001.

Frame size

Type ACH550-01-	I_{2N} **A**	P_N **kW**	**Frame size**
Three-phase supply voltage, 220…240 V			
04A6-2	4.6	0.75	R1
06A6-2	6.6	1.1	R1
07A5-2	7.5	1.5	R1
012A-2	11.8	2.2	R1
017A-2	16.7	4.0	R1
024A-2	24.2	5.5	R2
031A-2	30.8	7.5	R2
046A-2	46	11	R3
059A-2	59	15	R3
075A-2	75	18.5	R4
088A-2	88	22	R4
114A-2	114	30	R4
143A-2	143	37	R6
178A-2	178	45	R6
221A-2	221	55	R6
248A-2	248	75	R6
Three-phase supply voltage, 380…480 V			
02A4-4	2.4	0.75	R1
03A3-4	3.3	1.1	R1
04A1-4	4.1	1.5	R1
05A4-4	5.4	2.2	R1
06A9-4	6.9	3.0	R1
08A8-4	8.8	4.0	R1
012A-4	11.9	5.5	R1
015A-4	15.4	7.5	R2
023A-4	23	11	R2
031A-4	31	15	R3
038A-4	38	18.5	R3
044A-4	44	22	R4

Type ACH550-01-	I_{2N} **A**	P_N **kW**	**Frame size**
045A-4	45	22	R3
059A-4	59	30	R4
072A-4	72	37	R4
087A-4	87	45	R4
096A-4	96	45	R5
124A-4	124	55	R6
125A-4	125	55	R5
157A-4	157	75	R6
180A-4	180	90	R6
195A-4	205	110	R6
246A-4	245	132	R6

00467918.xls B

Mark the frame size of your drive in the box on the right.	

Note: For detailed technical information, see chapter *Technical data*.

Motor identification

An example motor rating plate for an IEC motor is shown below.

CE 0081 ABB Oy, Electrical Machines
LV Motors, Vaasa, Finland

3~ Motor M3JP 250SMA 4 EExd IIB T4 B3

IEC 250S/M 65

S1 No. 3492820

LJ-20964-1 / 2001 Ins.cl. F IP 55

V	Hz	kW	r/min	A	cos φ	Duty
690 Y	50	55	1479	58	0.83	
400 D	50	55	1479	101	0.83	
660 Y	50	55	1475	60	0.85	
380 D	50	55	1475	104	0.85	
415 D	50	55	1480	99	0.82	
440 D	60	63	1775	103	0.85	

Prod.code 3GJP252210-ADG138148

LCIE 00 ATEX 6030

6315/C3 6313/C3 450 kg

Ex II 2D A B B IEC 60034-1

Collect the following information:

- voltage
- nominal motor current
- nominal frequency
- nominal speed
- nominal power.

The figure below shows a motor with star and delta connections. For the highlighted row of the example motor rating plate on page 19, the connection is delta.

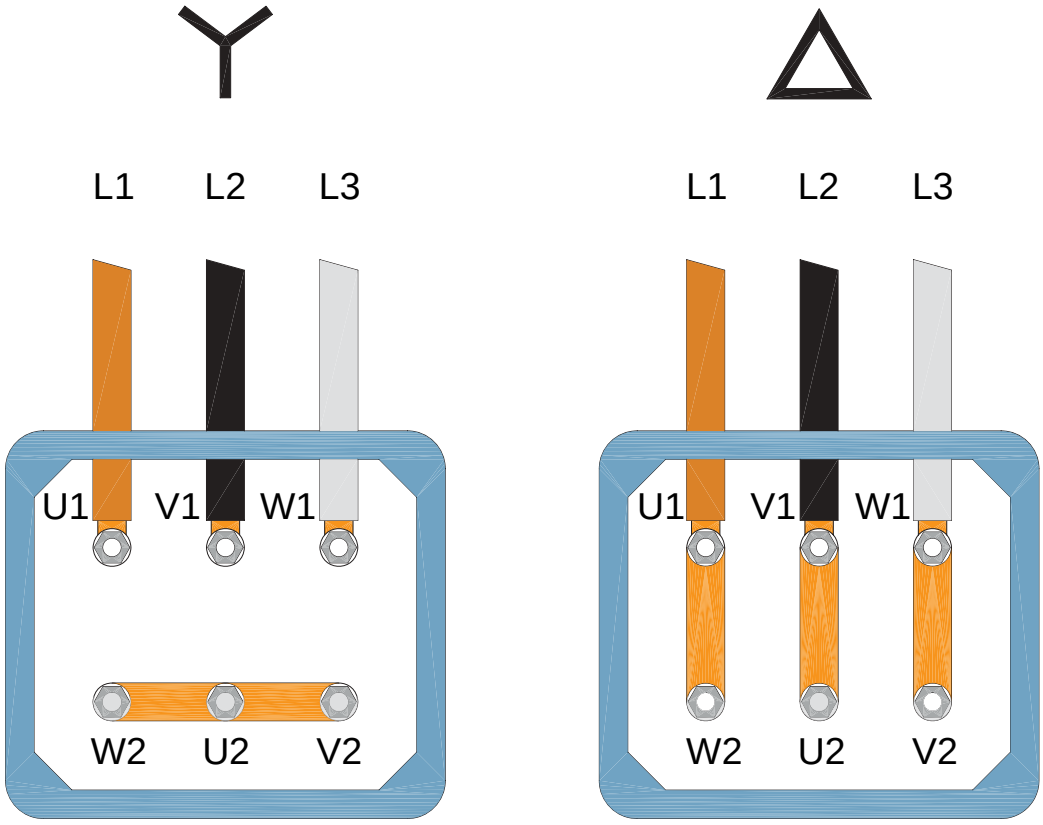

Note: Check which connection is correct for your motor type.

Motor compatibility

The motor, drive and supply power must be compatible:

Motor specification	Verify	Reference
Motor type	3-phase induction motor	-
Nominal current	type dependent	• type code label on drive, entry for “Output I_{2N}” (current), or • type code on drive and rating table in *Ratings* in chapter *Technical data*.
Nominal frequency	10…500 Hz	-
Voltage range	Motor requirement and supply voltage are both 3-phase voltage and are within the ACH550 voltage range.	208…240 V 380…480 V

Suitable environment and enclosure

Confirm that the site meets the environmental requirements. To prevent damage prior to installation, store and transport the drive according to the environmental requirements specified for storage and transportation. See section *Ambient conditions* on page *416*.

Confirm that the enclosure (degree of protection) is appropriate, based on the site containment level:

- IP21 type enclosure. The site must be free from airborne dust, corrosive gases or liquids, and conductive contaminants such as dripping water, condensation, carbon dust, and metallic particles.
- IP54 type enclosure. This enclosure provides protection from airborne dust and light sprays or splashing water from all directions.

Compared to the IP21 enclosure, the IP54 enclosure has:

- the same internal plastic shell as the IP21 enclosure
- a different outer plastic cover
- an additional internal fan to improve cooling
- larger dimensions
- the same rating (does not require a derating).

If, for some reason, an IP21 drive needs to be installed without the conduit box or cover, or an IP54 drive without the conduit plate or top cover, see the note on page *419*.

Suitable mounting location

Confirm that the mounting location meets the following constraints:

- The drive must be mounted vertically on a smooth, non-flammable, solid surface, and in a suitable environment as defined in section *Suitable environment and enclosure* on page *22*.
- For horizontal installation, contact ABB for more information (see page *424*).

Mounting on a machine frame is also possible. No additional plates are needed for cooling as the drive has an integral heatsink backplate.

See section *Mounting dimensions* on page *400* for mounting dimensions for all frame sizes and protection types.

The figure below shows the necessary free space for the installation of the unit.

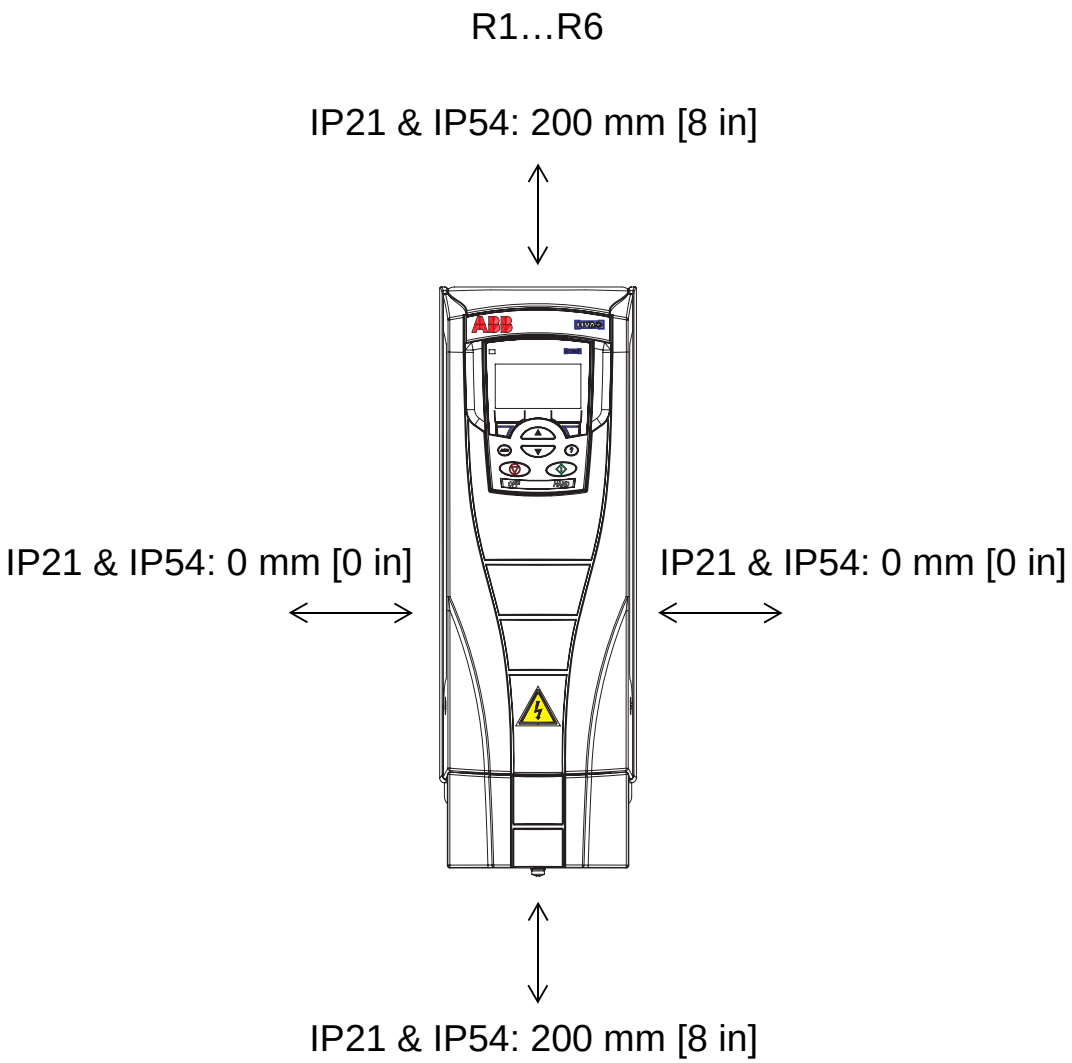

Make sure that the hot air does not re-circulate into the drive. The figure below show the minimum space for cooling air.

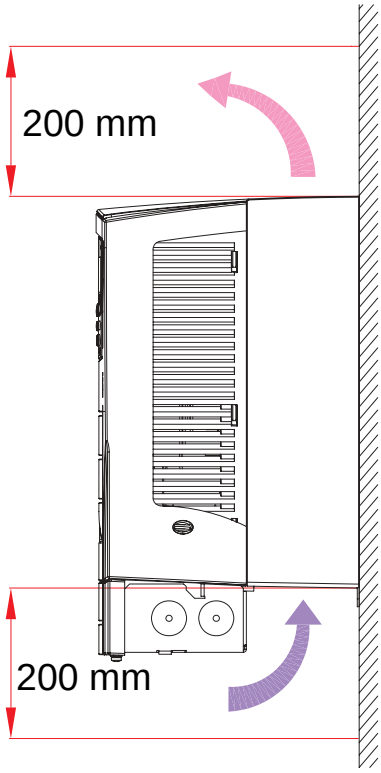

Stop the hot air from a drive from entering the cooling air intake of another drive with an adequate mechanical obstacle between the drives. The figure below shows the minimum space for cooling air.

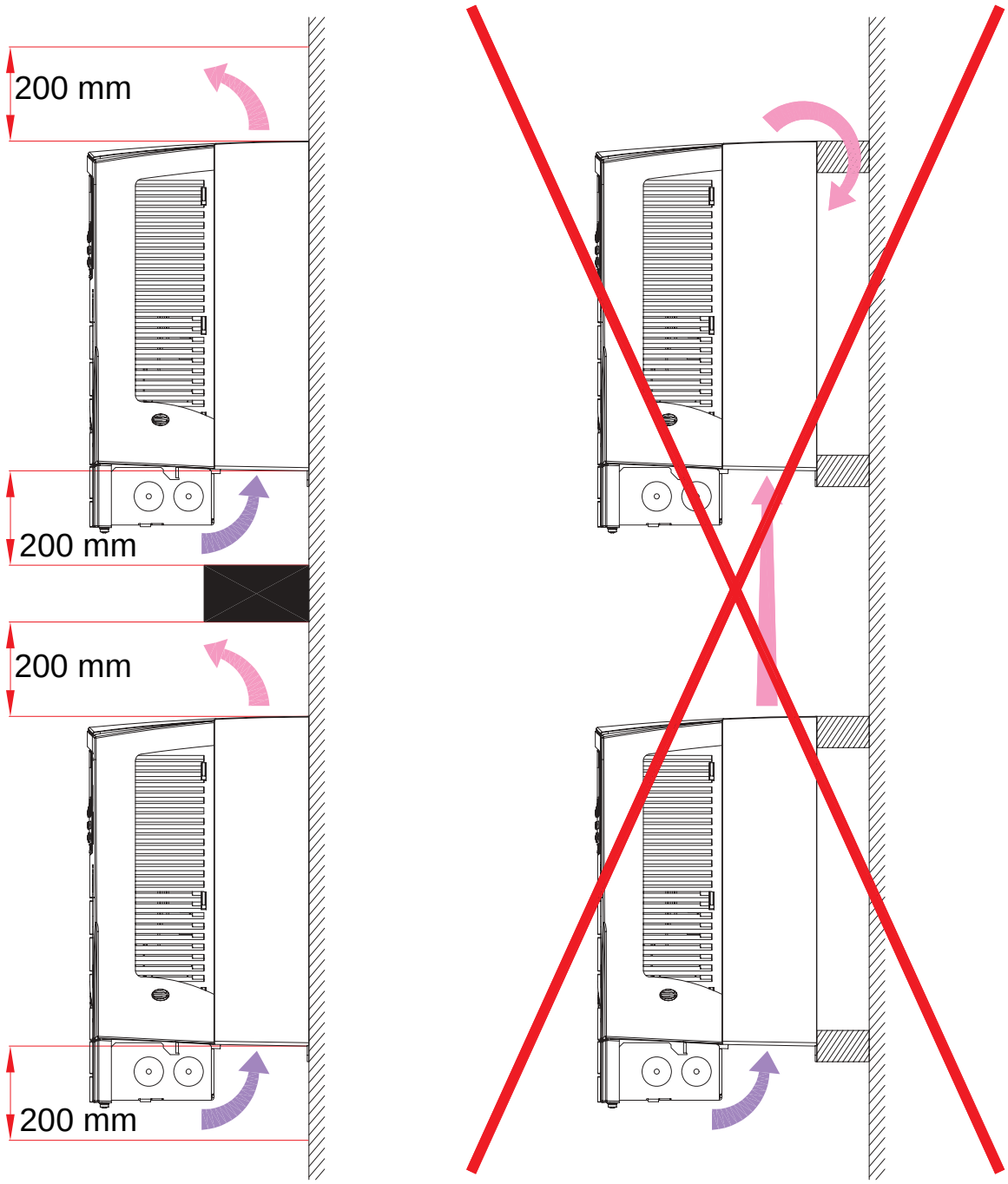

Wiring and EMC considerations

Determine electro-magnetic compliance (EMC) requirements per local codes. In general:

- Follow local codes for cable size.
- Keep these three classes of wiring separated: input power wiring, motor wiring and control/communications wiring.
- Check the operational limits for the allowed maximum motor cable length in section *Motor connection* on page *389*.
- If the installation must meet the European EMC Directive requirements (see section *Compliance with the IEC/ EN 61800-3 (2004)* on page *420*), check also the EMC limits for the allowed maximum motor cable length in section *Motor connection* on page *389*.

Note: Non-proper wiring is the source of the majority of EMC problems. Please follow the instructions to avoid these problems.

The figure below shows an example of correct wiring.

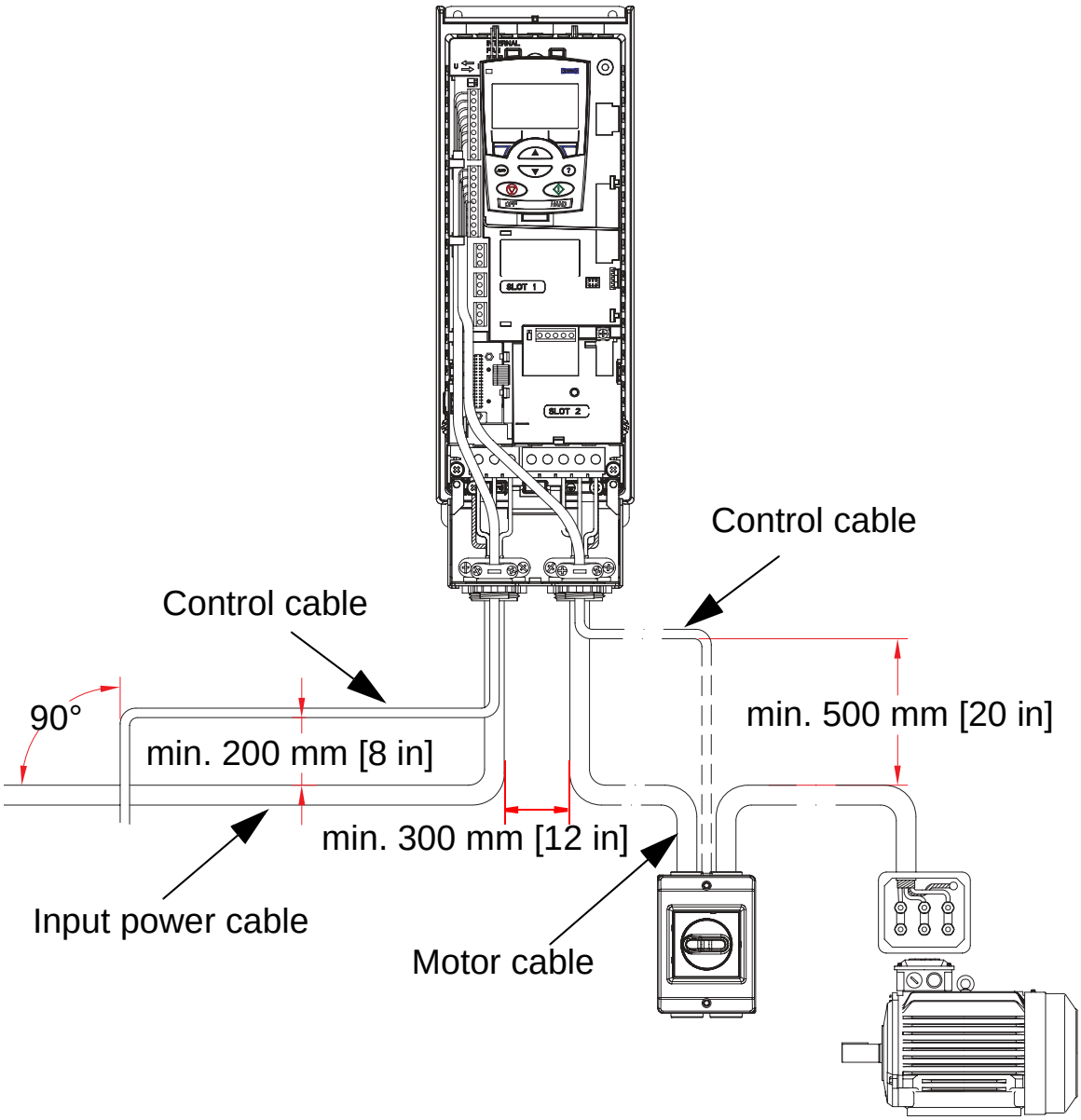

Note: If an output isolator or contactor is used, supply either 2102 STOP FUNCTION [value must be 1 (COAST)] or 1608 START ENABLE 1 from an auxiliary contact of the isolator to the ACH550.

Note: Wiring is discussed in more detail in chapter *Installing the drive*.

Cabling instructions

Keep individual unscreened wires between the cable clamps and the screw terminals as short as possible. Route control cables away from power cables.

Input power (mains) cables

See sections *Input power (mains) cable, fuses and circuit breakers* on page *381* and *Input power (mains) cable* on page *386*.

Motor cables

See section *Motor connection* on page *389* for the maximum motor cable lengths meeting the IEC/EN 61800-3 requirements for category C2 or C3, as applicable.

The figure below shows the minimum requirements for the motor cable screen.

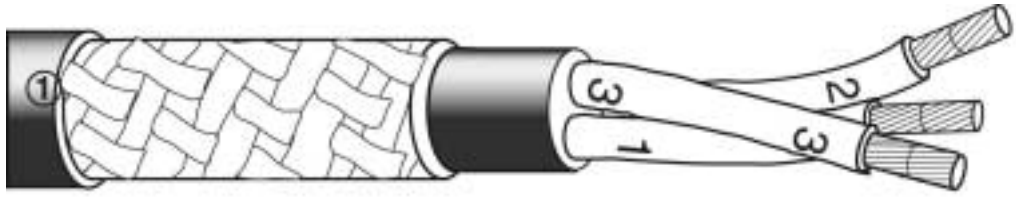

Galvanized steel or tinned copper wire with braided shield.

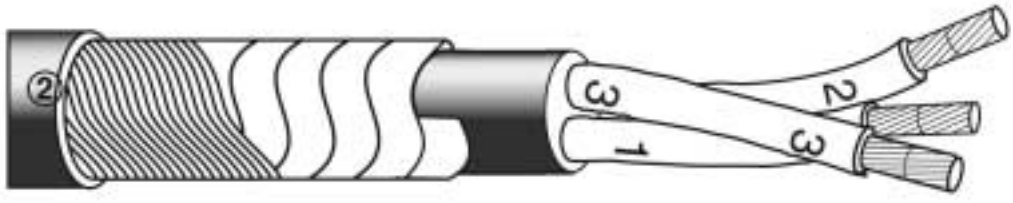

Layer of copper tape with concentric layer of copper wire.

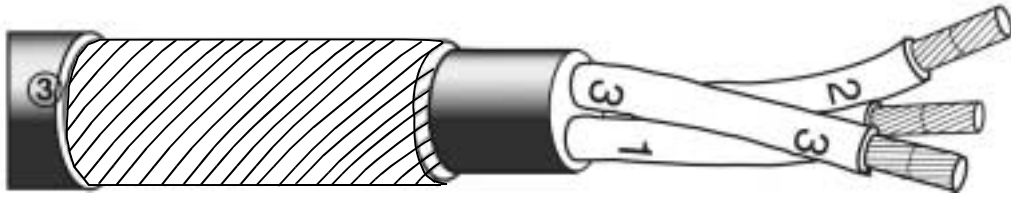

Concentric layer of copper wire.

The figure below shows non-recommended motor cable types.

Figures courtesy of Draka NK Cables. Copyright © 2003 Draka NK Cables.

The figure below shows the recommended conductor layout.

Recommended (CE & C-Tick)

Symmetrical shielded cable: three-phase conductors and a concentric or otherwise symmetrically constructed PE conductor, and a shield

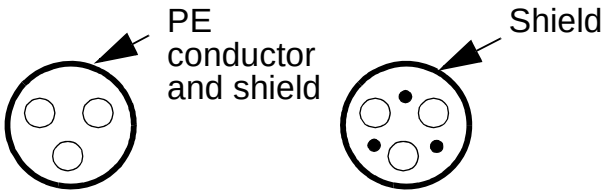

Not allowed for motor cables (CE & C-Tick)

A four-conductor system: three-phase conductors and a protective conductor, without a shield.

Allowed (CE & C-Tick)

A separate PE conductor is required if the conductivity of the cable shield is < 50% of the conductivity of the phase conductor.

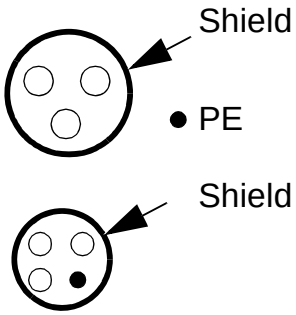

Allowed for motor cables with phase conductor cross section up to 10 mm^2.

Effective motor cable screens

The general rule for cable screen effectiveness is: the better and tighter the screen, the lower the radiated emission level. The figure below shows an example of an effective construction (for example Ölflex-Servo-FD 780 CP, Lapp Kabel or MCCMK, Draka NK Cables).

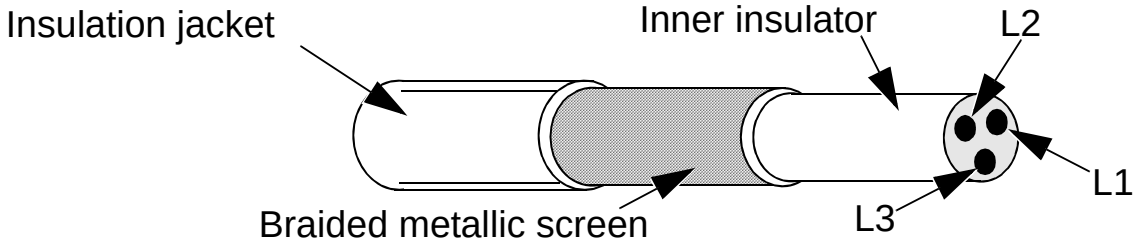

Clamp the cable shield into the gland plate at the drive end, twist the cable screen wires together into a bundle not longer than five times its width and connect it to the terminal marked ⏚ (at the bottom right-hand corner of the drive) if you are using a cable without a separate PE conductor.

The figure below shows the grounding principles of cables.

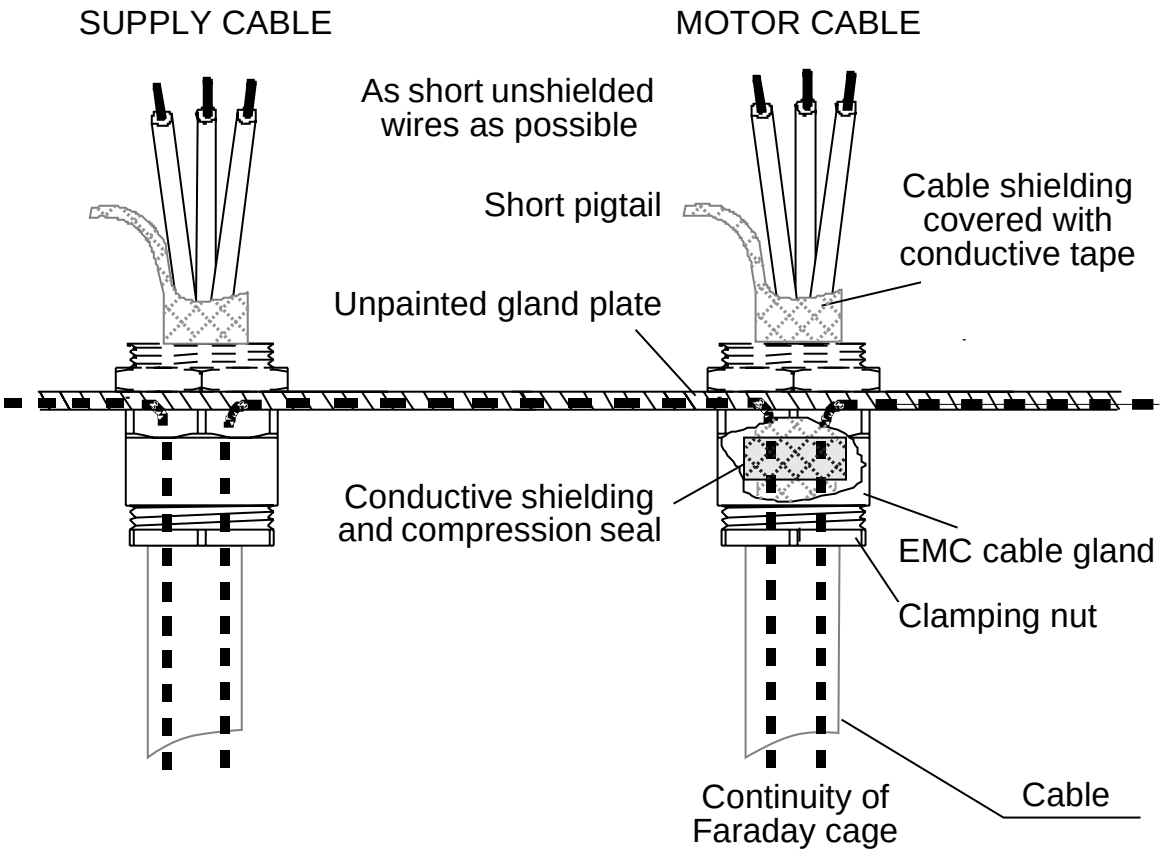

At the motor end, the motor cable screen must be earthed 360 degrees with an EMC cable gland, or the screen wires must be twisted together into a bundle not longer than five times its width and connected to the PE terminal of the motor. The same principle applies to cabinet installations.

Control cables

General recommendation

Use shielded cables, temperature rated at 60 °C (140 °F) or above.

The figure below shows examples of recommended cables.

Jamak by Draka NK Cables

Nomak by Draka NK Cables

Figures courtesy of Draka NK Cables. Copyright © 2003 Draka NK Cables.

- Control cables must be screened and of twisted pair type.
- The screen must be twisted together into a bundle not longer than five times its width and connected to terminal X1:1 (for digital and analogue I/O cables) or to either X1:28 or X1:32 (for RS485 cables).

Route control cables to minimize radiation to the cable:

- Route as far away as possible from the input power and motor cables (at least 20 cm [8 in]).
- Where control cables must cross power cables make sure they are at an angle as near to 90° as possible to minimize interference.
- Keep at least 20 cm (8 in) away from the sides of the drive.
- Run relay-controlled signals as twisted pairs (especially if voltage > 30 V). Relay-controlled signals using less than 30 V can be run in the same cables as digital input signals.

The figure below shows an example of control cable routing.

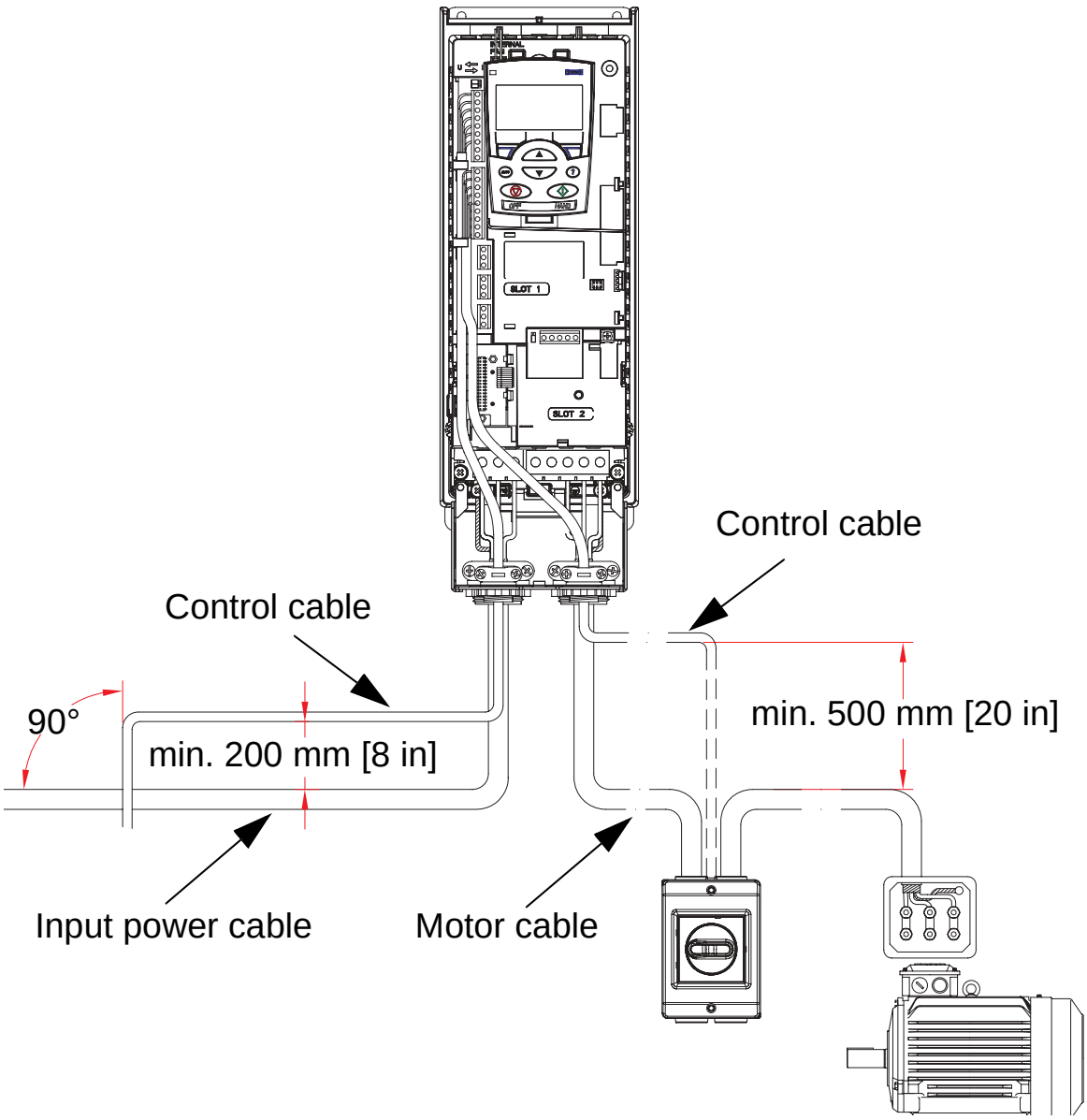

Note: Do not mix relay-controlled signals using more than 30 V and other control signals in the same cable.

Note: Never mix 24 V DC and 115/230 V AC signals in the same cable.

Analogue cables

Recommendations for analogue signal runs:

- Use double-shielded, twisted-pair cable.
- Use one individually shielded pair for each signal.
- Ground at one end only.

Digital cables

Recommendations for digital signal runs:

- A double-shielded cable is the best alternative, but a single-shielded twisted multipair cable is also usable.

Control panel (operator keypad) cable

If the control panel is connected to the drive with a cable, use only twisted-pair, ethernet cable. For example Standard CAT5 UTP Ethernet Patch Cable, wiring 568-B. Maximum length is 3 meters.

Tools required

To install the ACH550 you need the following:

- screwdrivers (as appropriate for the mounting hardware used)
- wire stripper
- tape measure
- drill
- mounting hardware: screws or nuts and bolts, four each. The type of hardware depends on the mounting surface and the frame size as follows:

Frame size	Frame weight kg IP21/IP54	Frame weight lb IP21/IP54	Mounting hardware Metric units	Mounting hardware Imperial units
R1	6.5 / 8	14 / 18	M5	#10
R2	9.0 / 11	20 / 24	M5	#10
R3	16 / 17	35 / 38	M5	#10
R4	24 / 26	53 / 57	M5	#10
R5	34 / 42	75 / 93	M6	1/4 in
R6	69[1] / 86[2]	152[1] / 190[2]	M8	5/16 in

[1] ACH550-01-246A-4, IP21: 71 kg / 156 lb
[2] ACH550-01-246A-4, IP54: 88 kg / 194 lb

Note: Do not lift frame size R6 without a lifting aid.

Checklist for installation preparations

✓	Check
	Check the frame type of the drive from the identification label (*Drive identification* on page *14*, *Frame size* on page *17*).
	Check the compatibility of the motor and the drive (*Motor identification* on page *19*, *Motor compatibility* on page *21*).
	Check the suitability of the environment and mounting location (*Suitable environment and enclosure* on page *22*, *Suitable mounting location* on page *23*).
	Check that the cables meet the requirements (*Wiring and EMC considerations* on page *26*, *Motor cables* on page *28*, *Control cables* on page *32*, *Compliance with the IEC/EN 61800-3 (2004)* on page *420*).
	Check that you have the required tools (*Tools required* on page *35*).
	Check that the walls support the drive weight (*Weights and mounting screws* on page *401*).

Installing the drive

What this chapter contains

This chapter contains the mechanical and electrical installation procedure of the drive.

WARNING! Before installing the ACH550, ensure the input power supply to the drive is off.

Note: The ACH550 should only be mounted where all of the requirements defined in chapter *Preparing for installation* are met and the checklist has been completed.

Preparing the mounting location

1. Use the mounting template to mark the position of the mounting holes.
2. Drill the holes.
3. Insert the screws halfway into the holes.

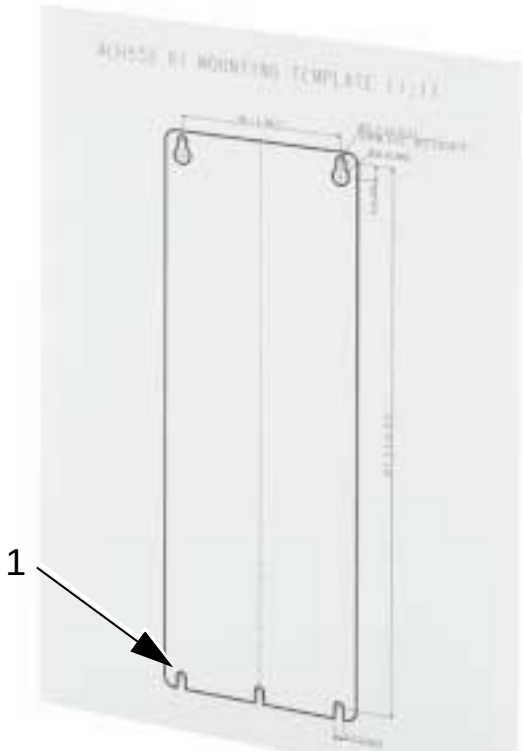

Note: Frame sizes R3 and R4 have four holes along the top. Use only two. If possible, use the two outside holes (to allow room to remove the fan for maintenance).

Removing front cover (IP54)

1. Loosen the captive screws (four or five, depending on the size of the frame) around the edge of the cover.
2. Remove the cover.

1

2

Removing front cover (IP21)

1. Remove the control panel, if attached.
2. Loosen the captive screw at the top.
3. Push side clamps in.
4. Pull up to lift the cover.

1

2

3

4

Mounting the drive (IP54)

1. Remove the rubber plugs by pushing from the outside.
2. Position the ACH550 onto the mounting screws or bolts [1] and securely tighten in all four corners.
3. Place the protective plugs over the screws.
4. Warning stickers in different languages are supplied with this manual. Attach a warning sticker in the appropriate language on the inside plastic shell.

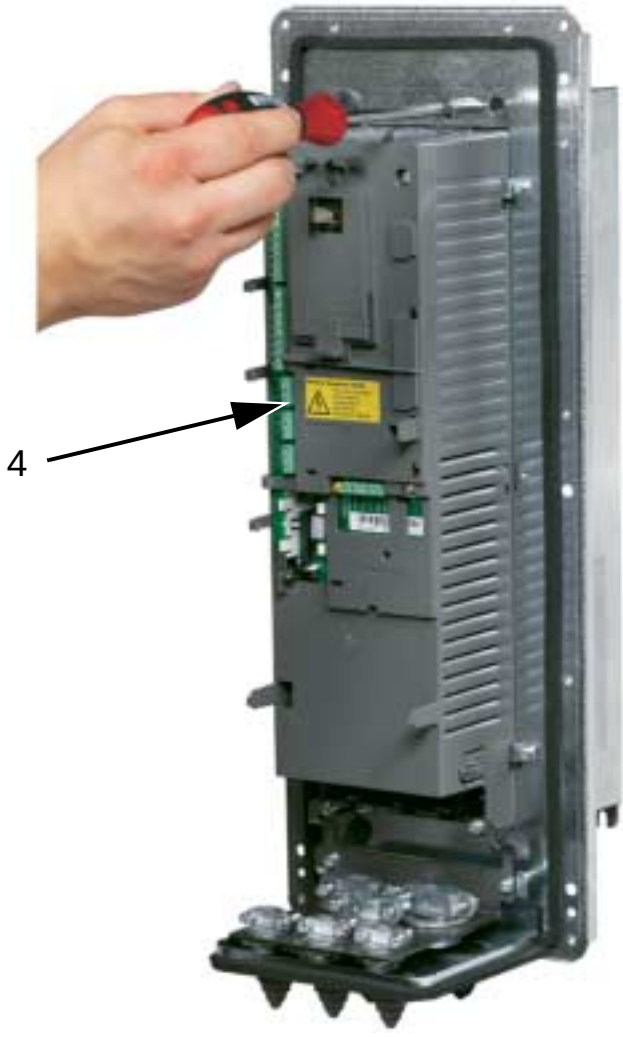

[1] Lift R6 drives by their lifting holes.

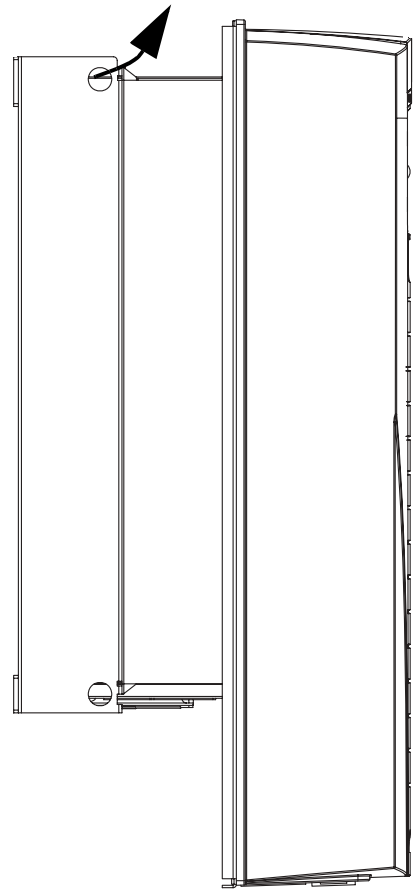

Mounting the drive (IP21)

1. Position the ACH550 onto the mounting screws or bolts [1] and securely tighten in all four corners.
2. Warning stickers in different languages are supplied with this manual. Attach a warning sticker in the appropriate language on the inside plastic shell.

[1] Lift R6 drives by their lifting holes.

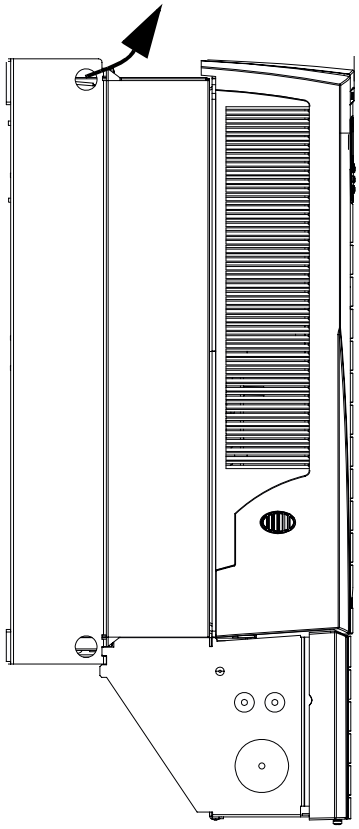

Overview of wiring installation (R1…R4)

The figure below shows an overview of the terminal layout for frame sizes R1…R4.

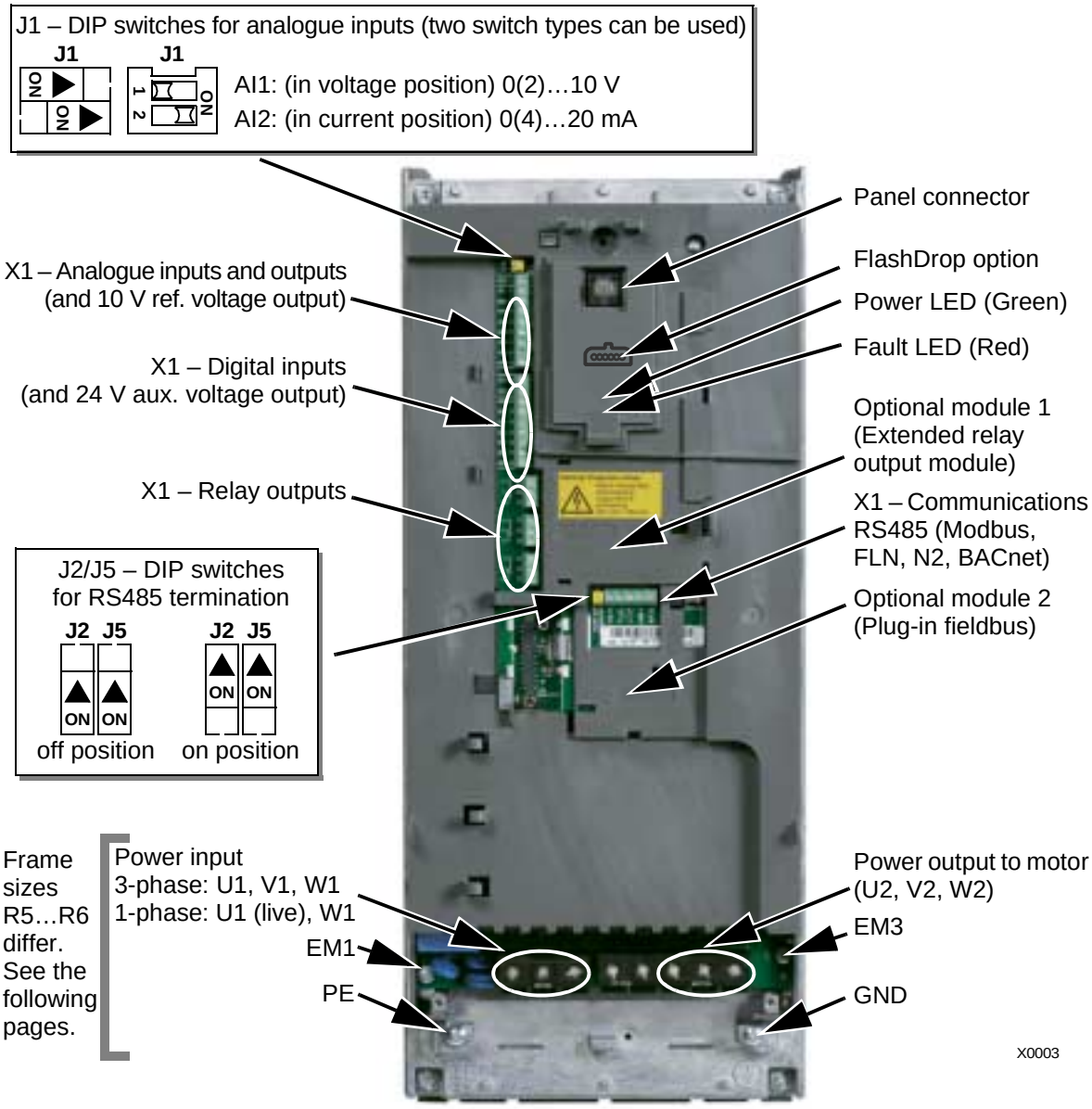

The figure shows the R3 frame size.
Other frame sizes have similar layouts.

WARNING! For IT systems, corner grounded TN systems and residual current circuit breakers, remove screws at EM1 and EM3 to disconnect the EMC filter. Note that when the EMC filter is disconnected, the drive is not EMC compatible.

Overview of wiring installation (R5…R6)

The figures below show the general terminal layouts for frame sizes R5…R6.

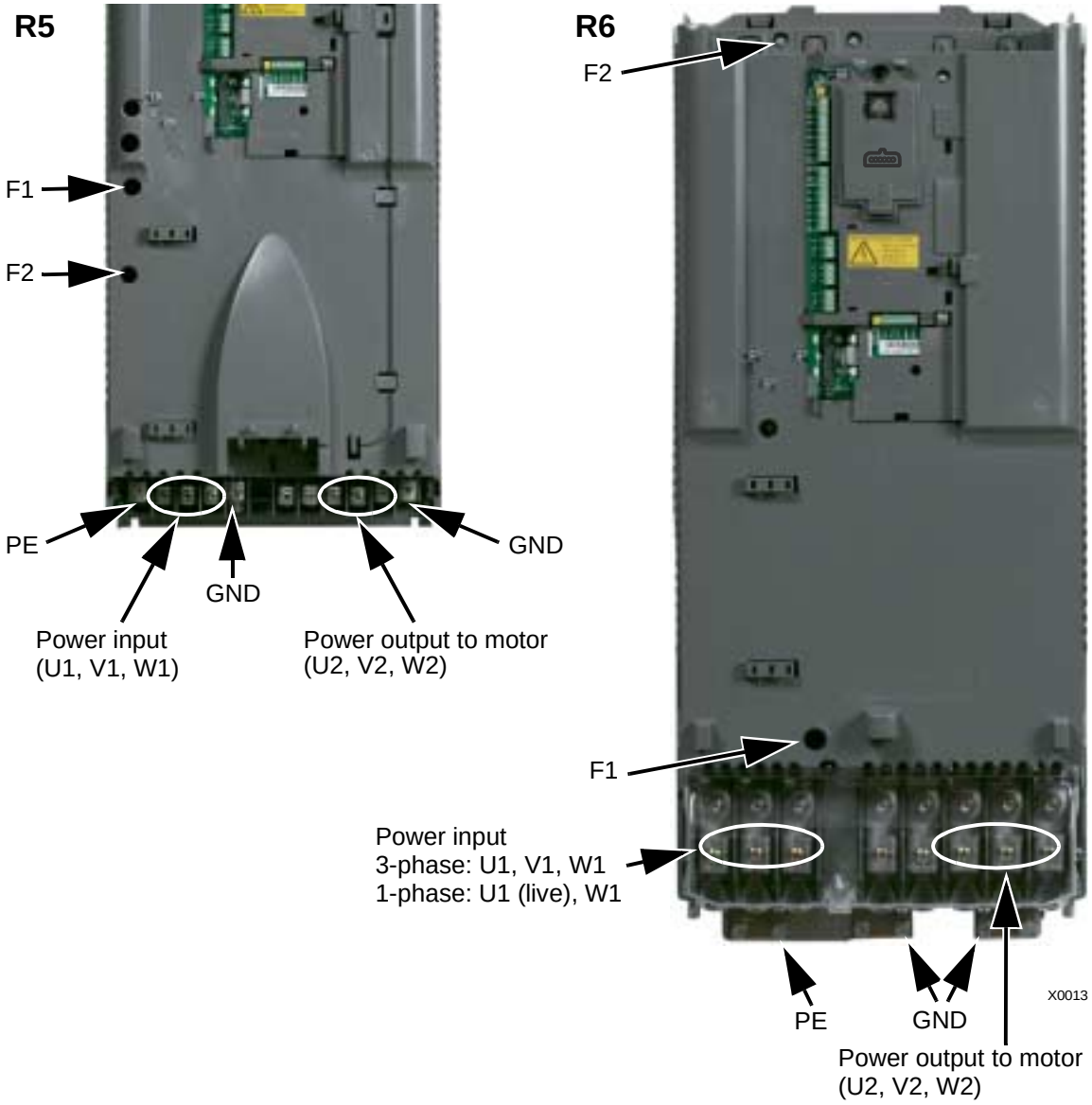

WARNING! For IT systems, corner grounded TN systems and residual current circuit breakers, remove screws at F1 and F2 to disconnect the EMC filter. Note that when the EMC filter is disconnected, the drive is not EMC compatible.

Power wiring (IP54)

1. Cut the rubber cable seals as needed for the 1) power, 2) motor, and 3) control cables.

2. On the input power cable, strip the sheathing back far enough to route individual wires. Also strip the individual wires.

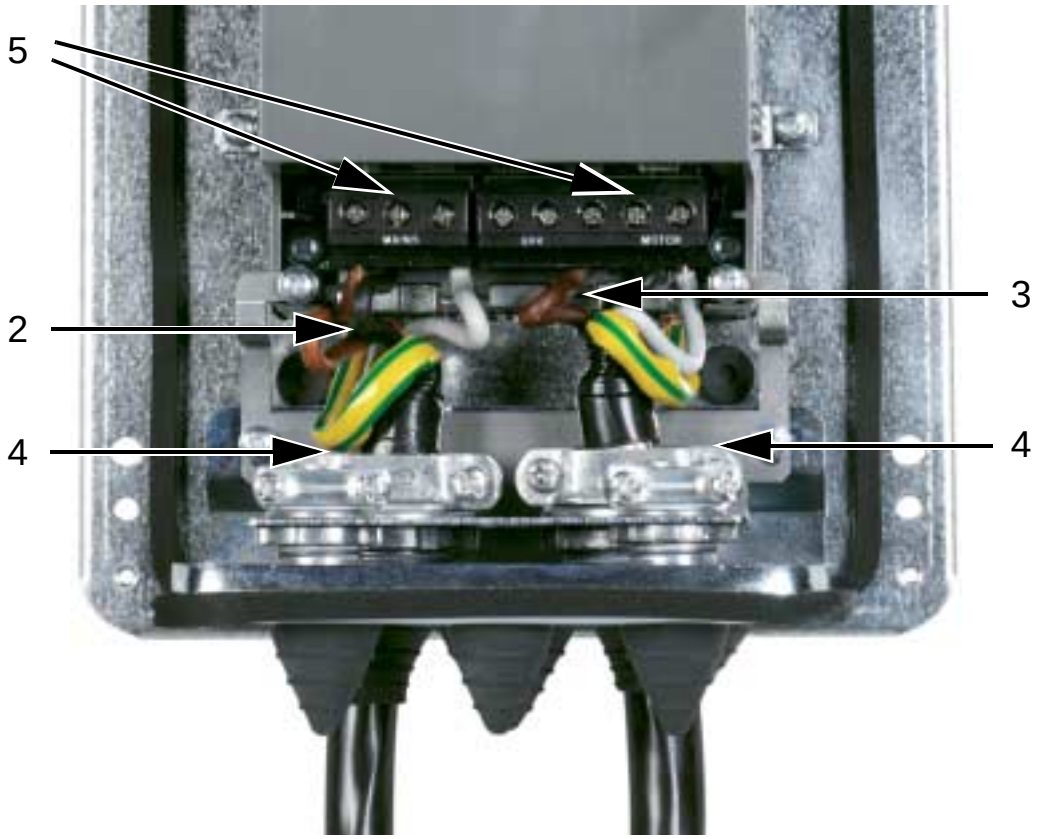

3. On the motor cable, strip the sheathing back far enough to expose the copper wire screen so that the screen can be twisted into a pigtail. Keep the pigtail short to minimize noise radiation. Also strip the individual wires.
   360° grounding under the clamp is recommended for the motor cable to minimize noise radiation. In this case, remove sheathing at the cable clamp.
4. Route the input power and motor cables through the clamps and tighten the clamps.
5. Connect the input power, motor and the grounding wires to the drive terminals using the torques given in the table on page *46*. Frame size R6: See the figures about correct lug types on page *46*.

Tightening torques

Frame size	U1, V1, W1, U2, V2, Tightening torque		Earthing PE Tightening torque	
	N·m	lb-ft	N·m	lb-ft
R1	1.4	1.0	1.4	1.0
R2	1.4	1.0	1.4	1.0
R3	1.8	1.3	1.8	1.3
R4	2.0	1.5	2.0	1.5
R5	15	11.1	15	11.1
R6	40	29.5	8	5.9

Frame size R6 lugs

R6: Crimp-on ring lugs (16…70 mm^2 / 6…2/0 AWG cables)

Remove the screw-on terminal lugs. Attach crimp-on ring lugs to the cables.

Isolate the ends of the ring lugs with insulating tape or shrink tubing.

Attach the ring lugs to the remaining bolts with M10 nuts.

R6: Screw-on terminal lugs (95…185 mm^2 / 3/0…350 AWG cables)

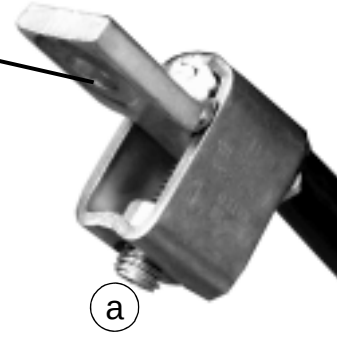

a. Attach the screw-on lugs to the cables.

b. Attach the screw-on lugs to the drive.

WARNING! If the wire size is less than 95 mm^2 (3/0 AWG), a crimp-on ring lug must be used. A cable of wire size less than 95 mm^2 (3/0 AWG) connected to a screw-on terminal lug will loosen and may damage the drive.

Note: Check the cable lengths according to section *Wiring and EMC considerations* on page *26*.

Control wiring (IP54)

1. On each control cable, strip the sheathing back far enough to expose the copper wire screen for the cable clamp. Also strip the individual wires.
2. Clamp the control cables.
3. Connect the control wires to the drive terminals.

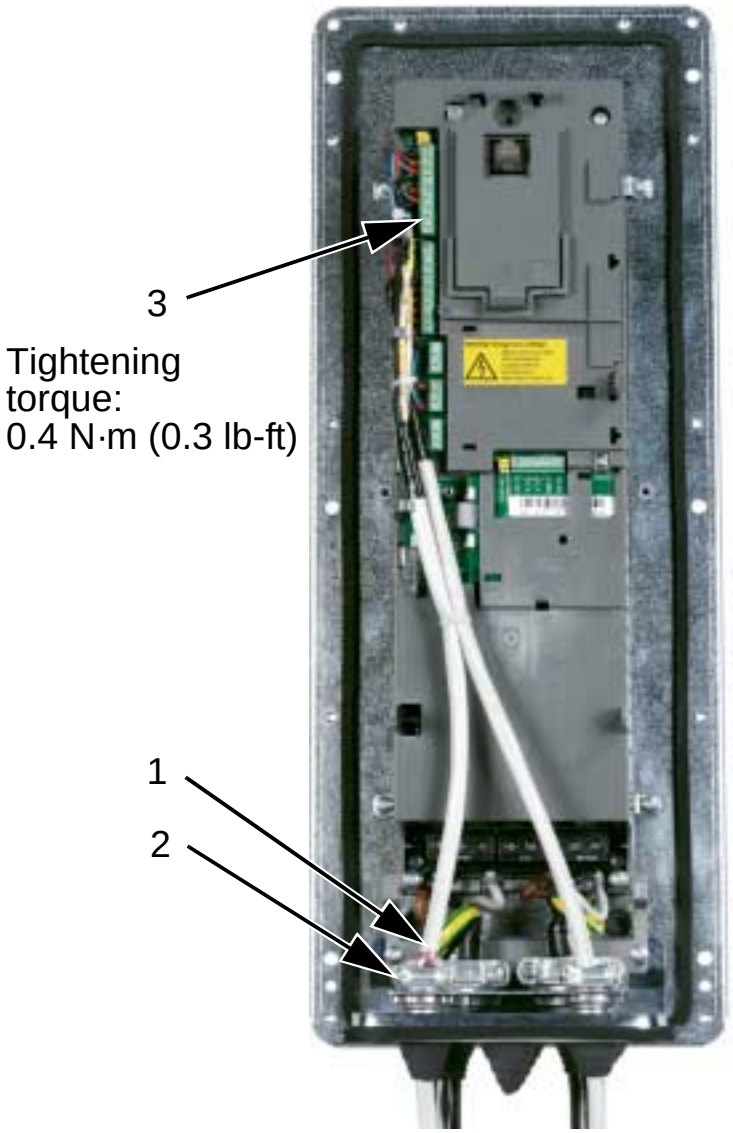

WARNING! All ELV (Extra Low Voltage) circuits connected to the drive must be used within a zone of equipotential bonding, i.e. within a zone where all simultaneously accessible conductive parts are electrically connected to prevent hazardous voltages appearing between them. This is accomplished by a proper factory grounding.

For completing the connections, go to chapter *Application macros and wiring*.

Power wiring (IP21)

1. Open the appropriate knockouts in the connection box.

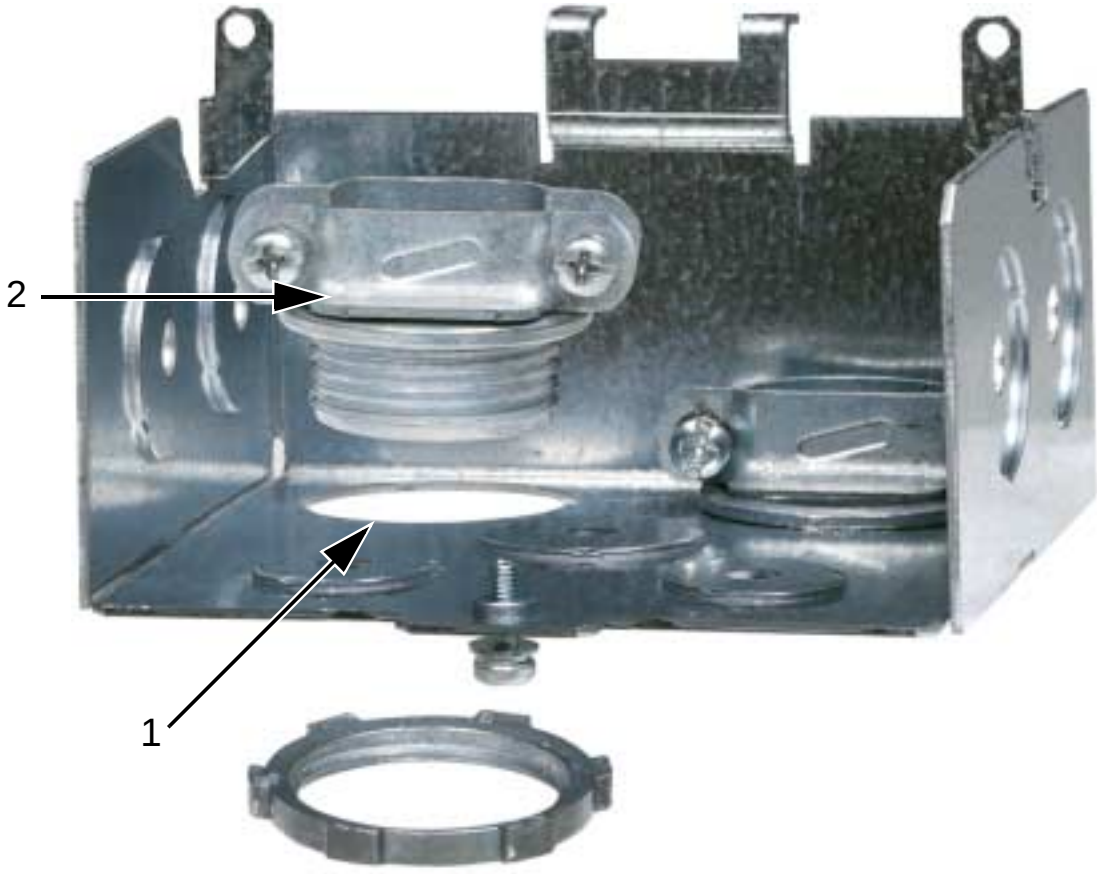

2. Install the cable clamps for the input power and motor cables.

3. Install the connection box and tighten the cable clamps.

Note: The connection box can be left out in cabinet installations if the cabinet is grounded. Screen the connection (360°) in the cubicle.

4. On the input power cable, strip the sheathing back far enough to route individual wires.
5. On the motor cable, strip the sheathing back far enough to expose the copper wire screen so that the screen can be twisted into a pigtail. Keep the pigtail short to minimize noise radiation.
   360° grounding under the clamp is recommended for the motor cable to minimize noise radiation. In this case, remove sheathing at the cable clamp.

Tightening torques		
	N·m	lb-ft
U1, V1, W1, U2, V2, W2,		
R1	1.4	1.0
R2	1.4	1.0
R3	1.8	1.3
R4	2.0	1.5
R5	15	11.1
U1, V1, W1, U2, V2, W2		
R6	40	29.5
PE		
R6	8	5.9

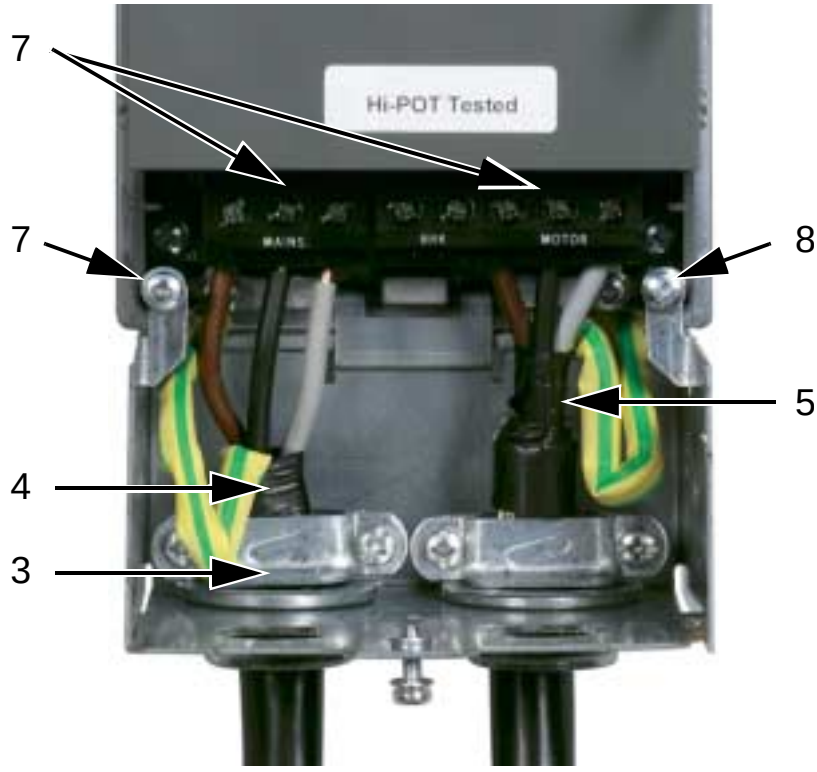

6. Route both cables through the clamps.
7. Strip and connect the input power and motor wires and the input power grounding wire to the drive terminals. Frame size R6: See the figures on page *46*.
8. Connect the pigtail created from the motor cable screen to the ground.

Note: Check the cable lengths according to section *Wiring and EMC considerations* on page *26*.

Control wiring (IP21)

1. Install the cable clamp(s) for the control cable(s). (Input power and motor cables are not shown in the figure).

2. Strip the control cable sheathing.

3. Route the control cable(s) through the clamp(s) and tighten the clamp(s).
4. Connect the ground screen for digital and analogue I/O cables at X1:1.
5. Strip and connect the individual control wires to the drive terminals. See chapter *Application macros and wiring*.
6. Install the connection box cover (one screw).

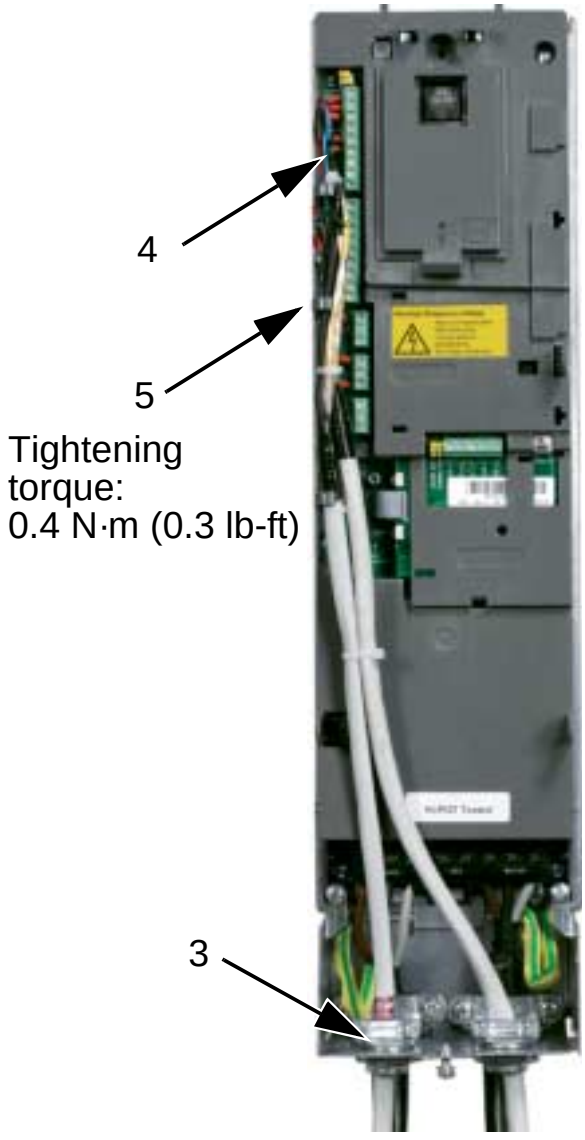

WARNING! All ELV (Extra Low Voltage) circuits connected to the drive must be used within a zone of equipotential bonding, i.e. within a zone where all simultaneously accessible conductive parts are electrically connected to prevent hazardous voltages appearing between them. This is accomplished by a proper factory grounding.

For completing the connections, go to chapter *Application macros and wiring*.

Check installation

✓	Check
	The installation preparations have been completed according to the installation checklist.
	The drive is mounted securely.
	The space around the drive meets the drive's specifications for cooling (*Suitable mounting location* on page *23*).
	The motor and driven equipment are ready for start.
	For IT systems, corner grounded TN systems and residual current circuit breakers: the internal EMC filter is disconnected (*Overview of wiring installation (R1…R4)* on page *42*, *Overview of wiring installation (R5…R6)* on page *43*).
	The drive is properly grounded.
	The input power (mains) voltage matches the drive's nominal input voltage.
	The input power (mains) connections at U1, V1 and W1 are connected and tightened as specified.
	The input power (mains) fuses and mains switch are installed. (*Input power (mains) cable, fuses and circuit breakers* on page *381*).
	The motor connections at U2, V2 and W2 are connected and tightened as specified.
	The motor cable is routed away from other cables.
	NO power factor compensation capacitors are in the motor cable.
	The control connections are connected and tightened as specified.

✓	**Check**
	NO tools or foreign objects (such as drill shavings) are inside the drive.
	NO alternate power source for the motor (such as a bypass connection) is connected - no voltage is applied to the output of the drive.

Re-install cover (IP54)

1. Align the cover and slide it on.
2. Tighten the captive screws around the edge of the cover.
3. Re-install the control panel.

Note: The control panel window must be closed to comply with IP54.

1

2

Re-install cover (IP21)

1. Align the cover and slide it on.
2. Tighten the captive screw.
3. Re-install the control panel.

1

2

3

Apply power

WARNING! Always re-install the front cover before turning power on.

WARNING! The ACH550 will start up automatically at power-up if the external run command is on at I/O.

1. Apply input power.
2. Green LED is lit.

Note: Before increasing motor speed, check that the motor is running in the desired direction.

Note: If you want to generate a fault to check the I/O, select HAND mode and remove the control panel.

The figure below shows changing the direction of motor rotation, seen from the shaft end of the motor.

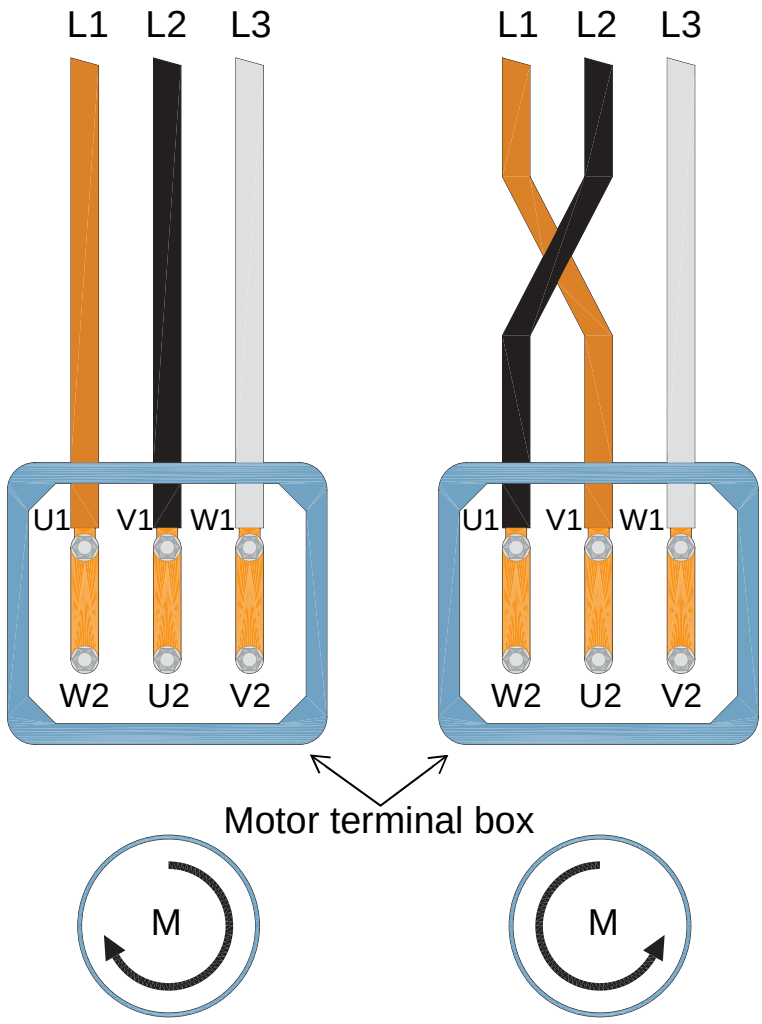

Note: The direction of rotation can be changed from the drive, but we recommend switching the motor cables to associate the drive forward direction with the clockwise motor rotation.

Note: Now the drive is fully operational for manual operation. If you wish to use I/O connections, refer to chapter *Application macros and wiring*.

Start-up and control panel

What this chapter contains

This chapter contains a brief description of the assistant (HVAC) control panel (operator keypad), start-up assistant and application selection.

Control panel compatibility

The manual is compatible with the HVAC control panel ACH-CP-B Rev R with panel firmware version 1.66 or later.

HVAC control panel (ACH-CP-B) features

The ACH550 HVAC control panel (operator keypad) ACH-CP-B features:

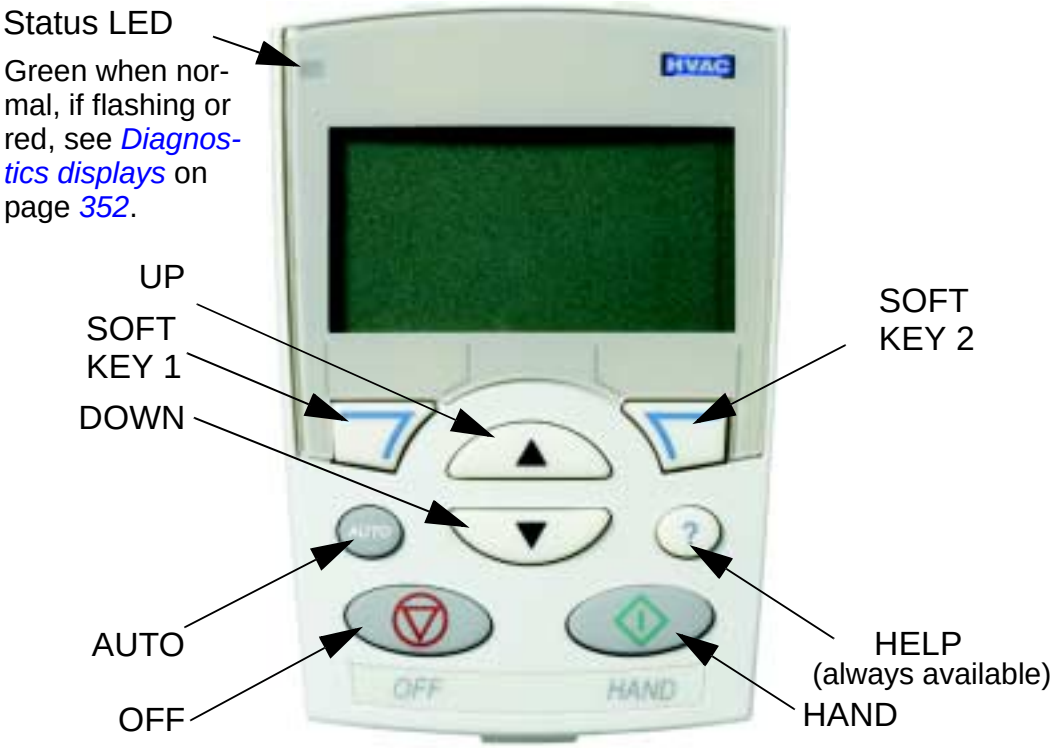

- language selection for the display
- drive connection that can be made or detached at any time
- start-up assistant to facilitate drive commissioning
- copy function for moving parameters to other ACH550 drives
- backup function for saving parameter sets

- context sensitive help
- real-time clock.

Start-up

Start-up can be performed in two ways:

1. using the Start-up assistant or
2. changing the parameters individually.

At the first start, the drive activates the Start-up assistant. You can restart it and its individual tasks in the Assistants mode as described in section *Assistants mode* on page *68*.

1. Start-up by using the Start-up assistant

To start the Start-up assistant, follow these steps:

1	Press MENU to go to the main menu		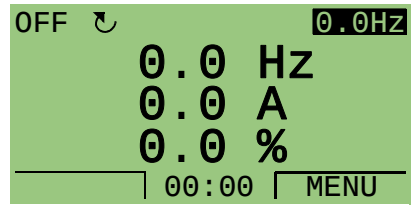
2	Select ASSISTANTS with the UP/DOWN keys and press ENTER.		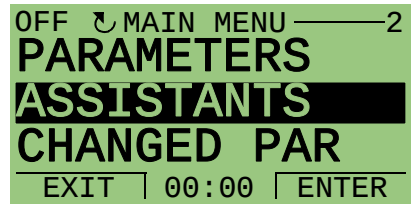
3	Scroll to Commission drive with the UP/DOWN keys and press SEL.		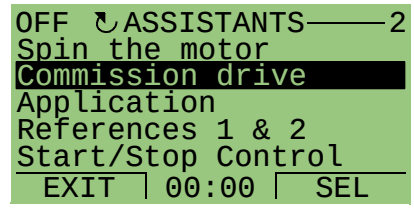
4	Change the values suggested by the Start-up assistant to your preferences and then press SAVE after every change.		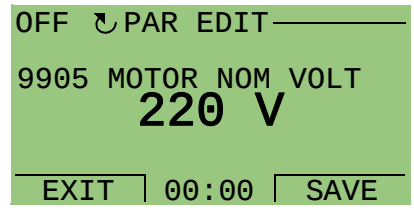

5	After selecting the macro, specify whether you want to use the mechanical HAND-OFF-AUTO switch. To be able to use the switch, EXT1 (HAND) Start command must be connected to DI1 and EXT2 (AUTO) Start command to DI6.		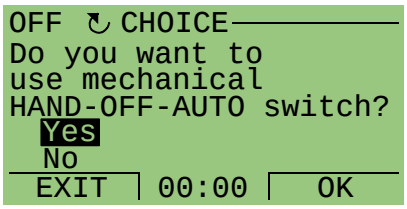
6	After completing a task, the Start-up assistant asks if you want to continue with the next one. Press OK (when Continue is highlighted) to continue with the next task, select Skip with the UP/DOWN keys and press OK to move to the next task without doing this one or press EXIT to stop the Start-up assistant.		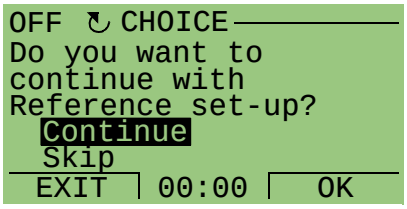

The Start-up assistant will guide you through the start-up. For more information, see section *Assistants mode* on page *68*.

2. Start-up by changing the parameters individually

To change the parameters, follow these steps:

1	Press MENU to go to the main menu.		OFF ↻ 0.0Hz 0.0 Hz 0.0 A 0.0 % 00:00 MENU
2	Select PARAMETERS with the UP/DOWN keys and press ENTER to go to the Parameters mode.		OFF ↻MAIN MENU 1 PARAMETERS ASSISTANTS CHANGED PAR EXIT 00:00 ENTER
3	Select the appropriate parameter group with the UP/DOWN keys and press SEL.		OFF ↻PAR GROUPS 99 99 START-UP DATA 01 OPERATING DATA 03 FB ACTUAL SIGNALS 04 FAULT HISTORY 10 START/STOP/DIR EXIT 00:00 SEL
4	Select the appropriate parameter in a group with the UP/DOWN keys. Press EDIT to change the parameter value.		OFF ↻PARAMETERS 9901 LANGUAGE 9902 APPLIC MACRO HVAC DEFAULT 9904 MOTOR CTRL MODE 9905 MOTOR NOM VOLT EXIT 00:00 EDIT
5	Press the UP/DOWN keys to change the parameter value.		OFF ↻PAR EDIT 9902 APPLIC MACRO HVAC DEFAULT [1] EXIT 00:00 SAVE
6	Press SAVE to store the modified value or press CANCEL to leave the set mode. Any modifications not saved are cancelled.		OFF ↻PAR EDIT 9902 APPLIC MACRO SUPPLY FAN [2] EXIT 00:00 SAVE
7	Press EXIT to return to the listing of parameter groups, and again to return to the main menu.		OFF ↻PARAMETERS 9901 LANGUAGE 9902 APPLIC MACRO SUPPLY FAN 9904 MOTOR CTRL MODE 9905 MOTOR NOM VOLT EXIT 00:00 EDIT

To complete the control connections by manually entering the parameters, see chapter *Parameter listing and descriptions*.

For detailed hardware description, see chapter *Technical data*.

Note: The current parameter value appears below the highlighted parameter.

Note: To replace the displayed value of a parameter with the default value, press the UP/DOWN keys simultaneously.

Note: The most typical and necessary parameters to change are the following parameter groups: *Group 99: START-UP DATA*, *Group 10: START/STOP/DIR*, *Group 11: REFERENCE SELECT*, *Group 13: ANALOGUE INPUTS*, *Group 16: SYSTEM CONTROLS*, *Group 20: LIMITS*, *Group 22: ACCEL/DECEL*, *Group 40: PROCESS PID SET 1*, *Group 41: PROCESS PID SET 2* and *Group 42: EXT / TRIM PID*.

Note: To restore the default factory settings, select the HVAC default application macro.

Modes

The HVAC control panel (operator keypad) has several different modes for configuring, operating and diagnosing the drive. The modes are:

- *Output (Standard display) mode* – Shows drive status information and operates the drive.
- *Parameters mode* – Edits parameter values individually.
- *Assistants mode* – Guides the start-up and configuration.
- *Changed parameters mode* – Shows changed parameters.
- *Drive parameter backup mode* – Uploads or downloads the parameters between the drive and the control panel.
- *Time and date mode* – Sets the time and date for the drive.
- *I/O settings mode* – Checks and edits the I/O settings.

Output (Standard display) mode

Use the Output (standard display) mode to read information on the drive's status and to operate the drive. To go to the Output mode, press EXIT until the LCD display shows status information as described below.

Status information

Top. The top line of the LCD display shows the basic status information of the drive.

- HAND – Indicates that the drive control is local, i.e., from the control panel (operator keypad).
- AUTO – Indicates that the drive control is remote, such as the basic I/O (X1) or fieldbus.
- ↻ – Indicates the drive and motor rotation status as follows:

Control panel display	Significance
Rotating arrow (clockwise or counterclockwise)	• Drive is running and at setpoint. • Shaft direction is forward or reverse.
Dotted rotating arrow	Drive is running but not at setpoint.
Stationary arrow	Drive is stopped.
Dotted stationary arrow	Start command is present, but the motor is not running, e.g. because start enable is missing.

- Upper right – shows the active reference.

Centre. Using parameter *Group 34: PANEL DISPLAY*, the centre of the LCD display can be configured to display:

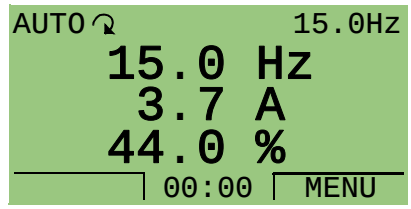

- Three signals from *Group 01: OPERATING DATA* – The default display shows parameters 0103 (OUTPUT FREQ) in hertz, 0104 (CURRENT) in amperes and 0120 (AI1) as a percentage.
- A bar meter instead of each signal value.

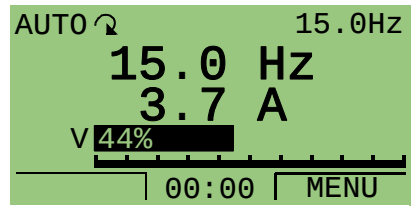

Bottom. The bottom of the LCD display shows:

- Lower corners – Show the functions currently assigned to the two soft keys.
- Lower centre – Displays the current time (if configured to show the time).

Operating the drive

AUTO/HAND – The very first time the drive is powered up, it is in the AUTO mode (remote control), and controlled from the Control terminal block X1.

To switch to HAND mode (local control) and control the drive using the control panel (operator keypad), press the HAND key or the OFF key .

- Pressing the HAND key switches the drive to local control while keeping the drive running.
- Pressing the OFF key switches to local control and stops the drive.

To switch back to AUTO mode, press the key.

Start/Stop – To start the drive, press the HAND ( ) or AUTO key ( ). To stop the drive press the OFF key ( ).

Reference – To modify the reference (only possible if the display in the upper right corner is highlighted in inverted colour) press the UP or DOWN keys (the reference changes immediately).

The reference can be modified in the HAND mode. It can be parameterized (using *Group 11: REFERENCE SELECT*) to also allow modification in the AUTO mode.

Parameters mode

To change the parameters, follow these steps:

1	Press MENU to go to the main menu.		OFF ↻ 0.0Hz 0.0 Hz 0.0 A 0.0 % 00:00 MENU
2	Select PARAMETERS with the UP/DOWN keys and press ENTER to go to the Parameters mode.		OFF ↻MAIN MENU 1 PARAMETERS ASSISTANTS CHANGED PAR EXIT 00:00 ENTER
3	Select the appropriate parameter group with the UP/DOWN keys and press SEL.		OFF ↻PAR GROUPS 99 99 START-UP DATA 01 OPERATING DATA 03 FB ACTUAL SIGNALS 04 FAULT HISTORY 10 START/STOP/DIR EXIT 00:00 SEL
4	Select the appropriate parameter in a group with the UP/DOWN keys. Press EDIT to change the parameter.		OFF ↻PARAMETERS 9901 LANGUAGE 9902 APPLIC MACRO HVAC DEFAULT 9904 MOTOR CTRL MODE 9905 MOTOR NOM VOLT EXIT 00:00 SEL
5	Press the UP/DOWN keys to change the parameter value.		OFF ↻PAR EDIT 9902 APPLIC MACRO HVAC DEFAULT [1] CANCEL 00:00 SAVE
6	Press SAVE to store the modified value or press CANCEL to leave the set mode. Any modifications not saved are cancelled.		OFF ↻PAR EDIT 9902 APPLIC MACRO SUPPLY FAN [2] CANCEL 00:00 SAVE
7	Press EXIT to return to the listing of parameter groups, and again to return to the main menu.		OFF ↻PARAMETERS 9901 LANGUAGE 9902 APPLIC MACRO SUPPLY FAN 9904 MOTOR CTRL MODE 9905 MOTOR NOM VOLT EXIT 00:00 EDIT

To complete the control connections by manually entering the parameters, see chapter *Parameter listing and descriptions*.

For detailed hardware description, see chapter *Technical data*.

Note: The current parameter value appears below the highlighted parameter.

Note: To replace the displayed value of a parameter with the default value, press the UP/DOWN keys simultaneously.

Note: The most typical and necessary parameters to change are the following parameter groups: *Group 99: START-UP DATA*, *Group 10: START/STOP/DIR*, *Group 11: REFERENCE SELECT*, *Group 13: ANALOGUE INPUTS*, *Group 16: SYSTEM CONTROLS*, *Group 20: LIMITS*, *Group 22: ACCEL/DECEL*, *Group 40: PROCESS PID SET 1*, *Group 41: PROCESS PID SET 2* and *Group 42: EXT / TRIM PID*.

Note: To restore the default factory settings, select the HVAC default application macro.

Assistants mode

The Start-up assistant guides you through the basic programming of a new drive. (You should familiarize yourself with basic control panel operation and follow the steps outlined above.) At the first start, the drive automatically suggests first selecting the language. The assistant also checks the values entered to prevent entries that are out of range.

The Start-up assistant is divided into assistants, each of which guides you through the task of specifying a related parameter set, for example References 1 & 2 or PID control. You may activate the assistants (tasks) one after the other, as the Start-up assistant suggests, or independently from a menu.

Note: If you want to set the parameters independently, use the Parameters mode.

To start the Start-up assistant, follow these steps:

1	Press MENU to go to the main menu.		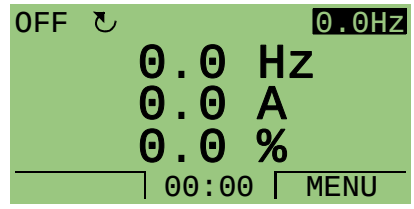
2	Select ASSISTANTS with the UP/DOWN keys and press ENTER.		
3	Scroll to Commission drive with the UP/DOWN keys and press SEL.		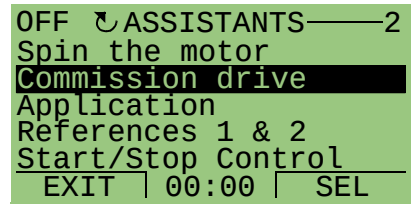
4	Change the values suggested by the assistant to your preferences and then press SAVE after every change.		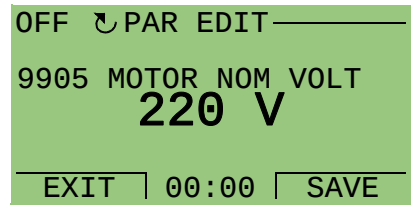

5	After selecting the macro, specify whether you want to use the mechanical HAND-OFF-AUTO switch.		OFF ↻ CHOICE Do you want to use mechanical HAND-OFF-AUTO switch? Yes No EXIT 00:00 OK
6	After completing a task, the Start-up assistant asks if you want to continue with the next one. Press OK (when Continue is highlighted) to continue with the next task, select Skip with the UP/DOWN keys and press OK to move to the next task without doing this one or press EXIT to stop the Start-up assistant.		OFF ↻ CHOICE Do you want to continue with Reference set-up? Continue Skip EXIT 00:00 OK

The Start-up assistant will guide you through the start-up.

To start an individual assistant from the menu, follow these steps:

1	Press MENU to go to the main menu.		OFF ↻ 0.0Hz 0.0 Hz 0.0 A 0.0 % 00:00 MENU
2	Select ASSISTANTS with the UP/DOWN keys and press ENTER.		OFF ↻ MAIN MENU 2 PARAMETERS ASSISTANTS CHANGED PAR EXIT 00:00 ENTER
3	Scroll to the assistant you want to use (References 1 & 2 is used here as an example) with the UP/DOWN keys and press SEL.		OFF ↻ ASSISTANTS 4 Spin the motor Commission drive Application References 1 & 2 Start/Stop Control EXIT 00:00 SEL

4	Change the values suggested by the assistant to your preferences and then press SAVE after every change. Pressing EXIT stops the assistant.		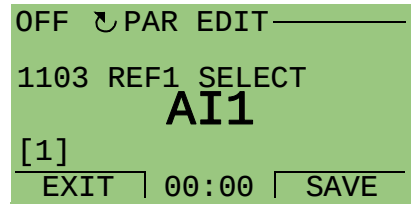
5	After the assistant has completed the task, you can select another assistant from the menu or exit the Assistants mode.		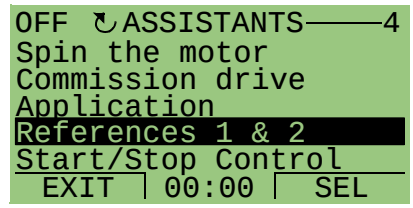

The table below lists the tasks of the assistants. The order of tasks presented by the Start-up assistant depends on your entries. The following task list is typical.

Task name	Description
Spin the motor	• Prompts for the control panel display language selection • Prompts for motor data • Guides user through the rotation check
Commission drive	• Prompts for motor data
Application	• Prompts for the application macro selection
References 1 & 2	• Prompts for the source of speed references 1 and 2 • Prompts for reference limits • Prompts for frequency (or speed) limits
Start/Stop Control	• Prompts for the source of the start and stop commands • Prompts for the start and stop mode definition • Prompts for acceleration and deceleration times
Protections	• Prompts for current and torque limits • Prompts for the use of Run enable and Start enable signals • Prompts for the use of the emergency stop • Prompts for the Fault function selection • Prompts for the Auto reset functions selection

Task name	Description
Constant Speeds	• Prompts for the use of constant speeds • Prompts for constant speed values
PID control	• Prompts for PID settings • Prompts for the source of the process reference • Prompts for reference limits • Prompts for the source, limits and units of the process actual value • Defines the use of Sleep function
PID Flow	• Prompts for the use of flow calculation. • Prompts for units. • Prompts for maximum flow. • Prompts for transmitter signals.
Low Noise Set-up	• Prompts for the switching frequency • Prompts for the definition of Flux optimization • Prompts for the use of Critical speeds
Panel Display	• Prompts for display variable and unit settings
Timed Functions	• Prompts for the use of Timed functions
Outputs	• Prompts for the signals indicated through the relay outputs • Prompts for the signals indicated through the analogue outputs AO1 and AO2. Sets the minimum, maximum, scaling and inversion values.
Serial Communication	• Prompts for communication settings. • Prompts for control access settings.

Changed parameters mode

The Changed parameters mode is used for viewing changed parameters. The mode shows those parameters whose values differ from the default values of the application macro currently in use.

To access the Changed parameters mode, follow these steps:

1	Press MENU to go to the main menu.		OFF ↻ 0.0Hz 0.0 Hz 0.0 A 0.0 % 00:00 MENU
2	Select CHANGED PAR with the UP/DOWN keys and press ENTER.		OFF ↻MAIN MENU 3 PARAMETERS ASSISTANTS CHANGED PAR EXIT 00:00 ENTER
3	A list of the changed parameters is displayed. Press EXIT to exit the Changed parameters mode, and again to return to the main menu.		OFF ↻CHANGED PAR 1202 CONST SPEED 1 20.0 Hz 1203 CONST SPEED 2 1204 CONST SPEED 3 1304 MINIMUM AI2 EXIT 00:00 EDIT

Drive parameter backup mode

Parameter backup mode is used to export parameters from one drive to another or to make a backup of the drive parameters. Uploading to panel stores all parameters, including two user sets and an override set, to the drive control panel (operator keypad). The full set, partial parameter set (application), user sets and override set can then be downloaded from the control panel to another drive or the same drive.

The control panel memory is non-volatile and does not depend on the panel battery.

Depending on the motor and application, the following options are available in the Drive parameter backup mode:

- UPLOAD TO PANEL – Copies all parameters from the drive to the control panel. This includes all defined user parameter sets, override parameter set and internal (not adjustable by the user) parameters such as those created by the ID Run).
- BACKUP INFO – Shows the following information about the drive whose parameters have been uploaded to the panel: drive type, drive rating and FW (firmware) version.
- DOWNLOAD FULL SET – Restores the full parameter set from the control panel to the drive. This writes all parameters, including the internal non-user-adjustable motor parameters, to the drive. It does not include the user parameter sets or the override parameter set.

Note: Use the Download full set function only to restore a drive from a backup if something has gone wrong or to transfer parameters to systems that are identical to the original system.

- DOWNLOAD APPLICATION – Copies a partial parameter set (part of the full set) from the control panel to the drive. The partial set does **not** include user sets, override set, internal motor parameters, parameters 9905…9909, 1605, 1607, 5201, nor any *Group 51: EXT COMM MODULE* and *Group 53: EFB PROTOCOL* parameters.
  This is recommended when using the same application for drives of different sizes.
- DOWNLOAD USER SET 1 – Copies the parameters in user set 1 from the control panel to the drive. A user set includes *Group 99: START-UP DATA* parameters and the internal motor parameters.

User set 1 must be first saved using parameter 9902 APPLIC MACRO and then uploaded to the control panel before downloading is possible.

- DOWNLOAD USER SET 2 – Copies the parameters in user set 2 from the control panel to the drive. As DOWNLOAD USER SET 1 above.
- DOWNLOAD OVERRIDE SET – Copies the parameters in the override set from the control panel to the drive.
  The override must be first saved (automatically, as defined by *Group 17: OVERRIDE*) and then uploaded to the control panel before downloading is possible.

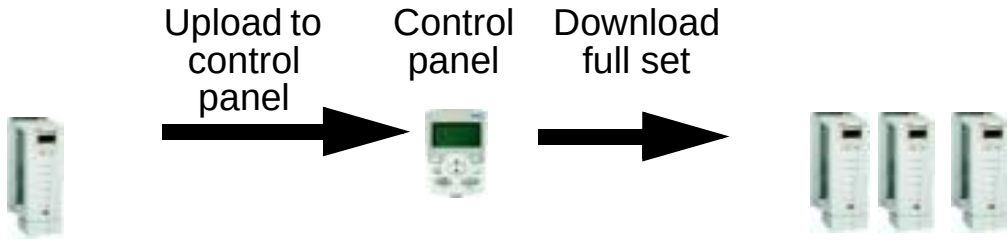

Downloading the full set of parameters from one drive to similar drives using the same application running identical motors

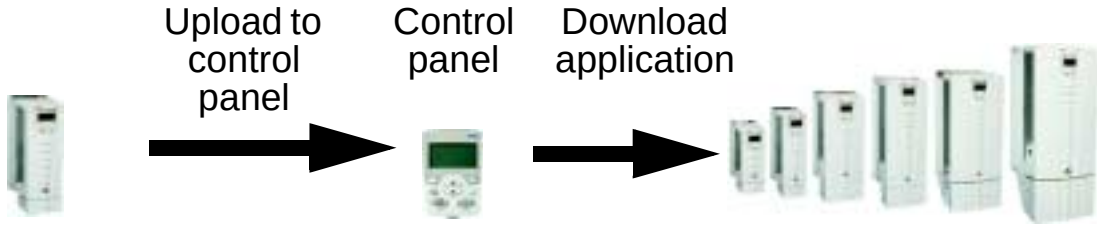

Downloading the same application to different drive sizes using the same application

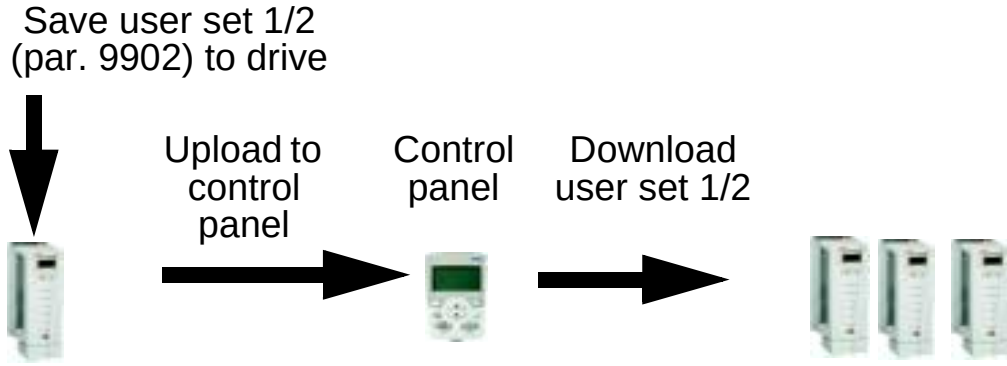

Downloading the parameters in a user set from one drive to similar drives using the same application running identical motors

To upload parameters to the control panel, follow these steps:

1	Press MENU to go to the main menu.		OFF ↻ 0.0Hz 0.0 Hz 0.0 A 0.0 % 00:00 MENU
2	Select PAR BACKUP with the UP/DOWN keys and press ENTER.		OFF ↻MAIN MENU 6 FAULT LOGGER TIME & DATE PAR BACKUP EXIT 00:00 ENTER
3	Scroll to UPLOAD TO PANEL and press SEL.		OFF ↻PAR BACKUP 1 UPLOAD TO PANEL BACKUP INFO DOWNLOAD FULL SET DOWNLOAD APPLICATION DOWNLOAD USER SET1 EXIT 00:00 SEL
4	Text “Copying parameters” and a progress diagram are displayed. Press ABORT if you want to stop the process.		OFF ↻PAR BACKUP Copying parameters 51% ABORT 00:00
5	Text “Parameter upload successful” is displayed. Press OK to return to the PAR BACKUP menu. Press EXIT twice to go to the main menu. Now you can disconnect the control panel.		OFF ↻MESSAGE Parameter upload successful OK 00:00 OFF ↻PAR BACKUP 1 UPLOAD TO PANEL BACKUP INFO DOWNLOAD FULL SET DOWNLOAD APPLICATION DOWNLOAD USER SET1 EXIT 00:00 SEL

To download the full set of parameters to a drive, follow these steps:

1	Press MENU to go to the main menu.		OFF ↻ 0.0Hz 0.0 Hz 0.0 A 0.0 % 00:00 MENU
2	Select PAR BACKUP with the UP/DOWN keys.		OFF ↻MAIN MENU 6 FAULT LOGGER TIME & DATE PAR BACKUP EXIT 00:00 ENTER
3	Scroll to DOWNLOAD FULL SET and press SEL.		OFF ↻PAR BACKUP 3 UPLOAD TO PANEL BACKUP INFO DOWNLOAD FULL SET DOWNLOAD APPLICATION DOWNLOAD USER SET1 EXIT 00:00 SEL
4	Text “Downloading parameters (full set)” is displayed. Press ABORT if you want to stop the process.		OFF ↻PAR BACKUP Downloading parameters (full set) 51% ABORT 00:00
5	After the download stops, the message “Parameter download successfully completed.” is displayed. Press OK to return to the PAR BACKUP menu. Press EXIT twice to go to the main menu.		OFF ↻MESSAGE Parameter download successfully completed OK 00:00 OFF ↻PAR BACKUP 1 UPLOAD TO PANEL BACKUP INFO DOWNLOAD FULL SET DOWNLOAD APPLICATION DOWNLOAD USER SET1 EXIT 00:00 SEL

To download the application (partial parameter set) to a drive, follow these steps:

1	Press MENU to go to the main menu.		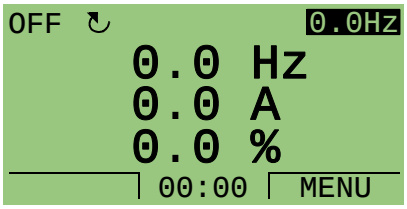
2	Select PAR BACKUP with the UP/DOWN keys.		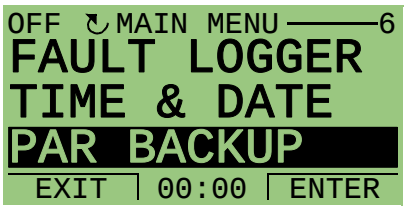
3	Scroll to DOWNLOAD APPLICATION and press SEL.		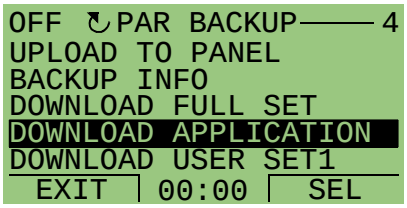
4	Text “Downloading parameters (application)” is displayed. Press ABORT if you want to stop the process.		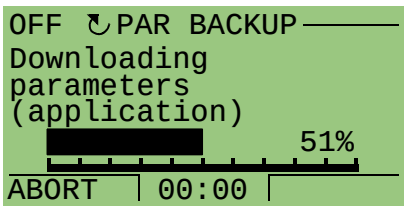
5	Text “Parameter download successfully completed.” Press OK to return to PAR BACKUP menu. Press EXIT twice to go to the main menu.		 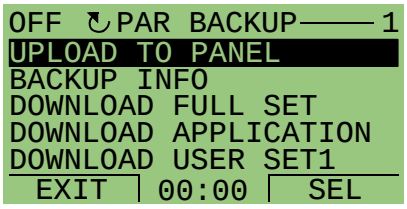

Note: If upload or download of parameters is aborted, the partial parameter set is not implemented.

To download the user set 1, user set 2 or override set to a drive, follow these steps:

1	Press MENU to go to the main menu.		OFF ↻ 0.0Hz 0.0 Hz 0.0 A 0.0 % 00:00 MENU
2	Select PAR BACKUP with the UP/DOWN keys.		OFF ↻MAIN MENU 6 FAULT LOGGER TIME & DATE PAR BACKUP EXIT 00:00 ENTER
3	Scroll to DOWNLOAD USER SET1 / USER SET2 / OVERR SET and press SEL.		OFF ↻PAR BACKUP 5 UPLOAD TO PANEL BACKUP INFO DOWNLOAD FULL SET DOWNLOAD APPLICATION DOWNLOAD USER SET1 EXIT 00:00 SEL
4	Text “Downloading parameters (user set 1 / user set 2 / override set)” is displayed. Press ABORT if you want to stop the process.		OFF ↻PAR BACKUP Downloading parameters (user set 1) 51% ABORT 00:00
5	After the download stops, the message “Parameter download successfully completed.” is displayed. Press OK to return to the PAR BACKUP menu. Press EXIT twice to go to the main menu.		OFF ↻MESSAGE Parameter download successfully completed. OK 00:00 OFF ↻PAR BACKUP 1 UPLOAD TO PANEL BACKUP INFO DOWNLOAD FULL SET DOWNLOAD APPLICATION DOWNLOAD USER SET1 EXIT 00:00 SEL

Time and date mode

The Time and date mode is used for setting the time and date for the internal clock of the ACH550. In order to use the timed functions of the ACH550, the internal clock has to be set first. Date is used to determine weekdays. It is shown in Fault logs.

To set the clock, follow these steps:

1	Press MENU to go to the main menu.		OFF ↻ 0.0Hz 0.0 Hz 0.0 A 0.0 % 00:00 MENU
2	Scroll to TIME & DATE with the UP/DOWN keys and press ENTER to go to the Time and date mode.		OFF ↻MAIN MENU 5 CHANGE PAR FAULT LOGGER TIME & DATE EXIT 00:00 ENTER
3	Scroll to CLOCK VISIBILITY with the UP/DOWN keys and press SEL to change the visibility of the clock.		OFF ↻TIME & DATE 1 CLOCK VISIBILITY TIME FORMAT DATE FORMAT SET TIME SET DATE EXIT 00:00 SEL
4	Scroll to SHOW CLOCK with the UP/DOWN keys and press SEL to make the clock visible.		OFF ↻CLOCK VISIB 1 Show clock Hide clock EXIT 00:00 SEL
5	Scroll to TIME FORMAT with the UP/DOWN keys and press SEL.		OFF ↻TIME & DATE 2 CLOCK VISIBILITY TIME FORMAT DATE FORMAT SET TIME SET DATE EXIT 00:00 SEL
6	The time formats are displayed. Select a format with the UP/DOWN keys and press SEL to confirm the selection.		OFF ↻TIME FORMAT 1 24-hour 12-hour CANCEL 00:00 SEL

7	Scroll to DATE FORMAT with the UP/DOWN keys and press SEL.		OFF ↻TIME & DATE——3 CLOCK VISIBILITY TIME FORMAT DATE FORMAT SET TIME SET DATE EXIT | 00:00 | SEL
8	The date formats are displayed. Select a format with the UP/DOWN keys and press OK to confirm the selection.		OFF ↻DATE FORMAT——1 dd.mm.yy mm/dd/yy dd.mm.yyyy mm/dd/yyyy CANCEL | 00:00 | SEL
9	Scroll to SET TIME with the UP/DOWN keys and press SEL.		OFF ↻TIME & DATE——4 CLOCK VISIBILITY TIME FORMAT DATE FORMAT SET TIME SET DATE EXIT | 00:00 | SEL
10	Change the hours and minutes with the UP/DOWN keys and press OK to save the values. The active value is highlighted in inverted colour.		OFF ↻SET TIME—— 00:00 CANCEL | OK
11	Scroll to SET DATE with the UP/DOWN keys and press SEL.		OFF ↻TIME & DATE——5 CLOCK VISIBILITY TIME FORMAT DATE FORMAT SET TIME SET DATE EXIT | 00:00 | SEL
12	Change the days, months and year with the UP/DOWN keys and press OK to save the values. The active value is highlighted in inverted colour.		OFF ↻SET DATE—— 01.01.08 CANCEL | 00:00 | OK
13	Scroll to DAYLIGHT SAVING with the UP/DOWN keys and press SEL.		OFF ↻TIME & DATE——6 TIME FORMAT DATE FORMAT SET TIME SET DATE DAYLIGHT SAVING EXIT | 00:00 | SEL

14	To disable automatic clock transitions according to the daylight saving changes, select Off with the UP/ DOWN keys and press OK. To enable automatic clock transitions, select the country or area whose daylight saving changes are followed and press OK. (If you press HELP, you can view the beginning and end dates of the period during which daylight saving time is used in each country or area.)		OFF ↻DAYLIGHT SAV —1 Off EU US Australia1:NSW,Vict.. Australia2:Tasmania.. EXIT 00:00 SEL OFF ↻HELP EU: On: Mar last Sunday Off: Oct last Sunday US: EXIT 00:00
15	Press EXIT twice to return to the main menu.		OFF ↻TIME & DATE——6 TIME FORMAT DATE FORMAT SET TIME SET DATE DAYLIGHT SAVING EXIT 00:00 SEL

I/O settings mode

The I/O settings mode is used for viewing and editing the I/O settings.

To view and edit the I/O settings, follow these steps:

1	Press MENU to go to the main menu.		OFF ↻ 0.0Hz 0.0 Hz 0.0 A 0.0 % 00:00 MENU
2	Scroll to I/O SETTINGS with the UP/DOWN keys and press ENTER.		OFF ↻MAIN MENU 7 TIME & DATE PAR BACKUP I/O SETTINGS EXIT 00:00 ENTER
3	Scroll to the I/O setting you want to view with the UP/DOWN keys and press SEL.		OFF ↻I/O SETTINGS 1 DIGITAL INPUTS (DI) ANALOG INPUTS (AI) RELAY OUTPUTS (ROUT) ANALOG OUTPUTS (AOUT) PANEL EXIT 00:00 SEL
4	Select the setting you want to view with the UP/DOWN keys and press OK.		OFF ↻I/O SETTINGS -DI1- 1001:START/STOP (E1) 1002:START/STOP (E2) EXIT 00:00 OK
5	You can change the value with the UP/DOWN keys and save it by pressing SAVE. If you do not want to change the setting, press CANCEL.		OFF ↻PAR EDIT 1001 EXT1 COMMANDS DI1 [1] CANCEL 00:00 SAVE
6	Press EXIT three times to return to the main menu.		OFF ↻I/O SETTINGS -DI1- 1001:START/STOP (E1) 1002:START/STOP (E2) EXIT 00:00 OK

Fault logger mode

The Fault logger mode is used for viewing faults. You can:

- view the drive fault history of maximum ten faults (after a power off, only the three latest faults are kept in the memory)
- see the details of the three latest faults (after a power off, the details of only the most recent fault is kept in the memory)
- read the help text for the fault.

To view the faults, follow the steps below. For more information on faults, see section *Correcting faults* on page *353*.

1	Press MENU to go to the main menu.		OFF ↻ 0.0Hz 0.0 Hz 0.0 A 0.0 % 00:00 MENU
2	Scroll to FAULT LOGGER with the UP/DOWN keys and press ENTER to go to the Fault logger mode.		OFF ↻MAIN MENU———4 ASSISTANTS CHANGED PAR FAULT LOGGER EXIT 00:00 ENTER
3	The display shows the fault log starting with the latest fault. The number on the row is the fault code (see the listing on page *353*). To see the details of a fault, select it with the UP/DOWN keys and press DETAIL.		OFF ↻FAULT LOGGER——1 10: PANEL LOSS 06.02.06 14:07:12 14: EXT FAULT 1 EXIT 00:00 DETAIL
4	Scroll the details with the UP/DOWN keys. To show the help text, press DIAG. Scroll the help text with the UP/DOWN keys. After reading the help, press OK to go back to the previous display. Press EXIT three times to return to the main menu.		OFF ↻PANEL LOSS——— FAULT 10 FAULT TIME 1 14:07:12 FAULT TIME 2 EXIT 00:00 DIAG OFF ↻DIAGNOSTIC——— Check: Comm lines and connections, Parameter 3002, parameters in groups 10 and 11. EXIT 00:00 OK

Application macros and wiring

What this chapter contains

This chapter contains the application macros used for defining a group of parameters. Macros change a group of parameters to new, predefined values. Use macros to minimize the need for manual editing of parameters.

Applications

The following applications are included in this chapter:

1. HVAC default [for typical BMS (Building Management System) applications]
2. Supply fan
3. Return fan
4. Cooling tower fan
5. Condenser
6. Booster pump
7. Pump alternation
8. Internal timer
9. Internal timer with constant speeds
10. Floating point
11. Dual setpoint PID
12. Dual setpoint PID with constant speeds
13. E-bypass (USA only)
14. Hand control.

Selecting an application macro

To select an application macro, follow these steps:

1	Press MENU to go to the main menu.		OFF ↻ 0.0Hz 0.0 Hz 0.0 A 0.0 % 00:00 MENU
2	Select ASSISTANTS with the UP/DOWN keys and press ENTER.		OFF ↻MAIN MENU 2 PARAMETERS ASSISTANTS CHANGED PAR EXIT 00:00 ENTER
3	Scroll to Application and press SEL.		OFF ↻ASSISTANTS 3 Spin the motor Commission drive Application References 1 & 2 Start/Stop Control EXIT 00:00 SEL
4	Select a macro with the UP/DOWN keys and press SAVE.		OFF ↻PAR EDIT 9902 APPLIC MACRO HVAC DEFAULT [1] EXIT 00:00 SAVE
5	If you want to use the mechanical HAND-OFF-AUTO switch, press OK. If you do not want to use it, select No with the DOWN key and then press OK. To be able to use the switch, EXT1 (HAND) Start command must be connected to DI1 and EXT2 (AUTO) Start command to DI6.		OFF ↻CHOICE Do you want to use mechanical HAND-OFF-AUTO switch? Yes No EXIT 00:00 OK

Restoring defaults

To restore the default factory settings, select the application macro HVAC default.

1. HVAC default

The HVAC default application macro is used e.g. for typical BMS applications.

The factory set configuration of inputs and outputs of the drive is as shown in the figure on page *89*.

When using a direct speed reference in the AUTO mode, the speed reference must be connected to analogue input 1 (AI1) and the START command is given with digital input 1 (DI1). In the HAND/OFF mode, the speed reference and START command are given through the control panel (operator keypad).

If process PI(D) is used, the feedback signal must be connected to analogue input 2 (AI2). By default, the setpoint is set from the control panel, but it can also be changed to analogue input 1. Process PI(D) must be commissioned and adjusted with parameters (*Group 40: PROCESS PID SET 1*) or using the PID control assistant (recommended).

HVAC default

for typical BMS applications

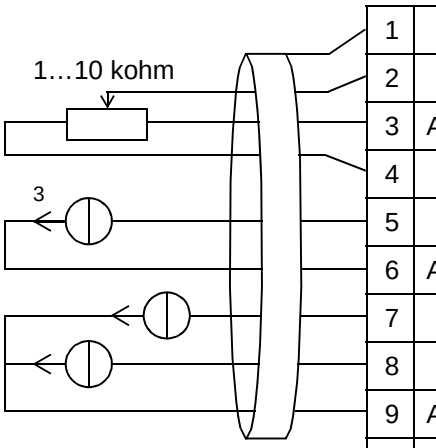

1	SCR	Signal cable shield (screen)
2	AI1	**External reference 1**: 0(2)…10 V or 0(4)…20 mA
3	AGND	Analogue input circuit common
4	10V	Reference voltage +10 V DC
5	AI2	**Actual signal 1**: 0(2)…10 V or 0(4)…20 mA
6	AGND	Analogue input circuit common
7	AO1	**Output frequency**: 0(4)…20 mA
8	AO2	**Output current**: 0(4)…20 mA
9	AGND	Analogue output circuit common
10	24V	Auxiliary voltage output +24 V DC
11	GND	Common for DI return signals
12	DCOM	Digital input common for all
13	DI1	**Start/Stop**: Activation starts the drive
14	DI2	Not used
15	DI3	**Constant speed 1** (par. 1202) [1]
16	DI4	**Start enable 1**: Deactivation stops the drive [2]
17	DI5	Not used
18	DI6	Not used

19	RO1C	Relay output 1 (par. 1401)
20	RO1A	Default operation
21	RO1B	**Ready** => 19 connected to 21
22	RO2C	Relay output 2 (par. 1402)
23	RO2A	Default operation
24	RO2B	**Running** => 22 connected to 24
25	RO3C	Relay output 3 (par. 1403)
26	RO3A	Default operation
27	RO3B	**Fault (-1)** => 25 connected to 27

[1] Not available if PID is activated
[2] Disable/enable with parameter 1608
[3] The sensor needs to be powered. See the manufacturer's instructions. A connection example of a two-wire 24 V DC / 4…20 mA sensor is shown on page *116*.

Note: The drive starts only if possible protection functions (Run enable or Start enable 1 and 2) are activated from I/O or disabled with parameters.

2. Supply fan

This application macro is for supply fan applications where the supply fan brings fresh air into the room according to the signals received from the transducer. See the figure below.

When using a direct speed reference in the AUTO mode, the speed reference must be connected to analogue input 1 (AI1) and the START command is given with digital input 1 (DI1). In the HAND/OFF mode, the speed reference and START command are given through the control panel (operator keypad).

If process PI(D) is used, the feedback signal must be connected to analogue input 2 (AI2). By default, the setpoint is set from the control panel, but it can also be changed to analogue input 1. Process PI(D) must be commissioned and adjusted with parameters (*Group 40: PROCESS PID SET 1*) or using the PID control assistant (recommended).

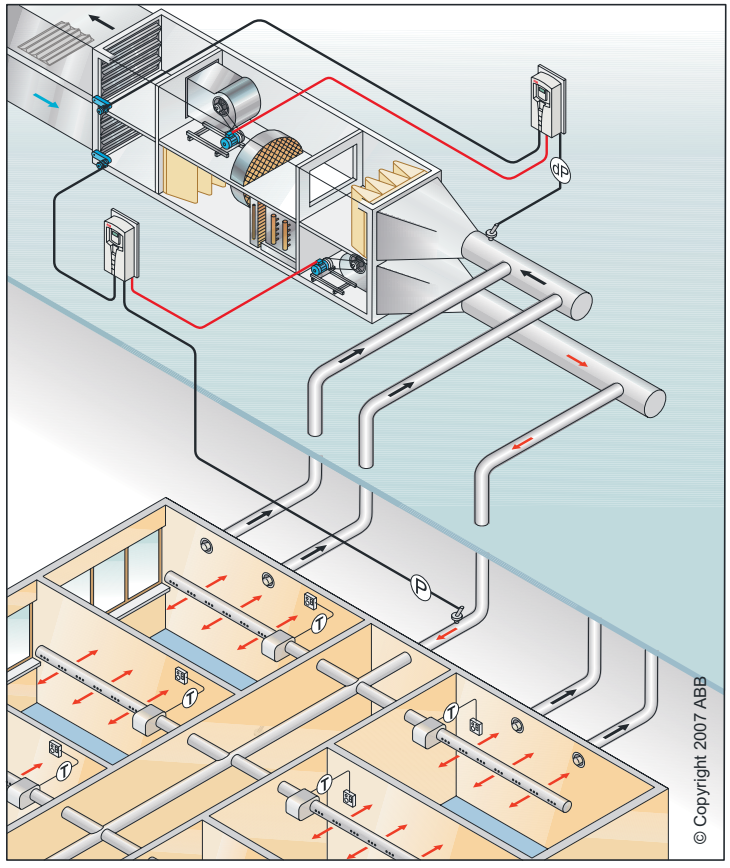

Supply fan

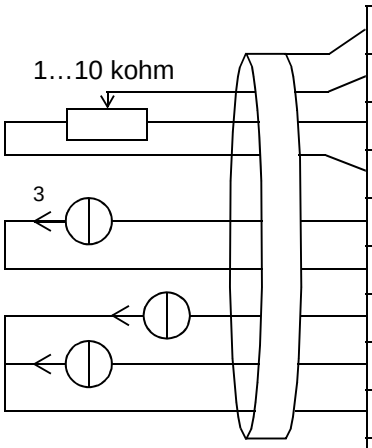

1	SCR	Signal cable shield (screen)
2	AI1	**External reference 1**: 0(2)…10 V or 0(4)…20 mA
3	AGND	Analogue input circuit common
4	10V	Reference voltage +10 V DC
5	AI2	**Actual signal 1**: 0(2)…10 V or 0(4)…20 mA
6	AGND	Analogue input circuit common
7	AO1	**Output frequency**: 0(4)…20 mA
8	AO2	**Output current**: 0(4)…20 mA
9	AGND	Analogue output circuit common
10	24V	Auxiliary voltage output +24 V DC
11	GND	Common for DI return signals
12	DCOM	Digital input common for all
13	DI1	**Start/Stop**: Activation starts the drive
14	DI2	**Run enable**: Deactivation stops the drive [2]
15	DI3	**Constant speed 1** (par. 1202) [1]
16	DI4	**Start enable 1**: Deactivation stops the drive [2]
17	DI5	**Start enable 2**: Deactivation stops the drive [2]
18	DI6	Not used

19	RO1C	Relay output 1 (par. 1401)
20	RO1A	Default operation
21	RO1B	**Ready** => 19 connected to 21
22	RO2C	Relay output 2 (par. 1402)
23	RO2A	Default operation
24	RO2B	**Running** => 22 connected to 24
25	RO3C	Relay output 3 (par. 1403)
26	RO3A	Default operation
27	RO3B	**Fault (-1)** => 25 connected to 27

[1] Not available if PID is activated
[2] Disable with parameters 1601, 1608 and 1609
[3] The sensor needs to be powered. See the manufacturer's instructions. A connection example of a two-wire 24 V DC / 4…20 mA sensor is shown on page *116*.

Note: The drive starts only if possible protection functions (Run enable or Start enable 1 and 2) are activated from I/O or disabled with parameters.

3. Return fan

This application macro is for return fan applications where the return fan takes air out of the room according to the signals received from the transducer. See the figure below.

When using a direct speed reference in the AUTO mode, the speed reference must be connected to analogue input 1 (AI1) and the START command is given with digital input 1 (DI1). In the HAND/OFF mode, the speed reference and START command are given through the control panel (operator keypad).

If process PI(D) is used, the feedback signal must be connected to analogue input 2 (AI2). By default, the setpoint is set from the control panel, but it can also be changed to analogue input 1. Process PI(D) must be commissioned and adjusted with parameters (*Group 40: PROCESS PID SET 1*) or using the PID control assistant (recommended).

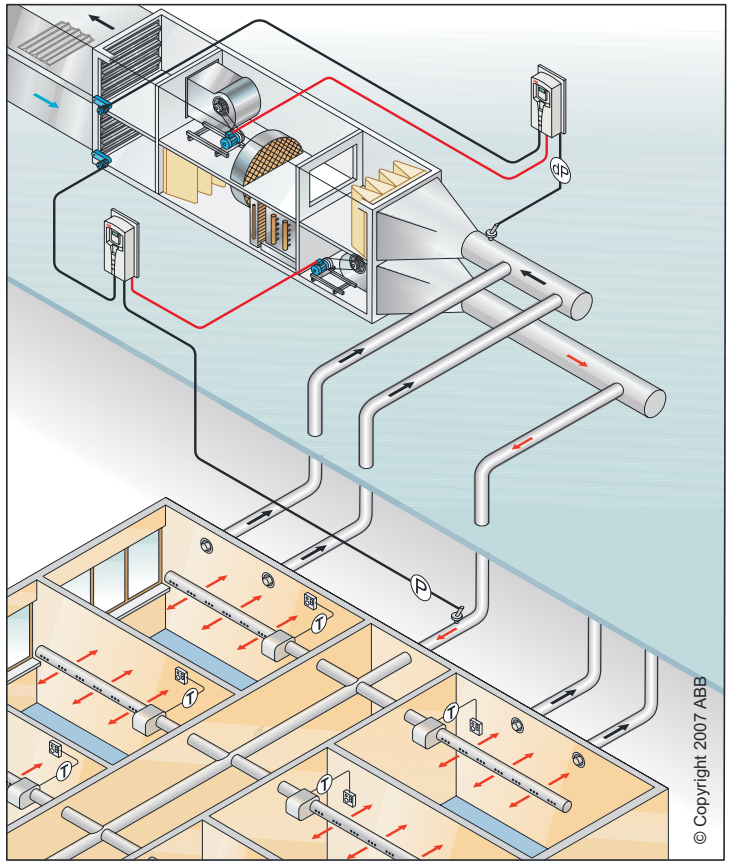

Return fan

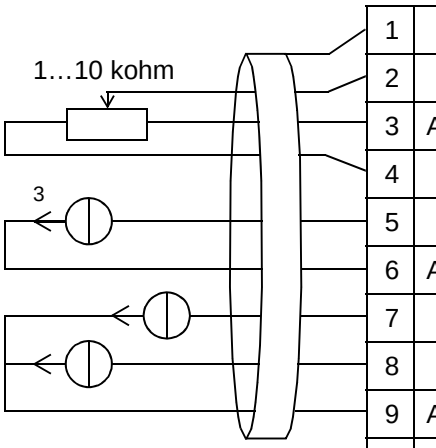

1	SCR	Signal cable shield (screen)
2	AI1	**External reference 1**: 0(2)…10 V or 0(4)…20 mA
3	AGND	Analogue input circuit common
4	10V	Reference voltage +10 V DC
5	AI2	**Actual signal 1**: 0(2)…10 V or 0(4)…20 mA
6	AGND	Analogue input circuit common
7	AO1	**Output frequency**: 0(4)…20 mA
8	AO2	**Output current**: 0(4)…20 mA
9	AGND	Analogue output circuit common
10	24V	Auxiliary voltage output +24 V DC
11	GND	Common for DI return signals
12	DCOM	Digital input common for all
13	DI1	**Start/Stop**: Activation starts the drive
14	DI2	**Run enable**: Deactivation stops the drive [2]
15	DI3	**Constant speed 1** (par. 1202) [1]
16	DI4	**Start enable 1**: Deactivation stops the drive [2]
17	DI5	**Start enable 2**: Deactivation stops the drive [2]
18	DI6	Not used

19	RO1C	Relay output 1 (par. 1401)
20	RO1A	Default operation
21	RO1B	**Ready** => 19 connected to 21
22	RO2C	Relay output 2 (par. 1402)
23	RO2A	Default operation
24	RO2B	**Running** => 22 connected to 24
25	RO3C	Relay output 3 (par. 1403)
26	RO3A	Default operation
27	RO3B	**Fault (-1)** => 25 connected to 27

[1] Not available if PID is activated
[2] Disable/enable with parameters 1601, 1608 and 1609
[3] The sensor needs to be powered. See the manufacturer's instructions. A connection example of a two-wire 24 V DC / 4…20 mA sensor is shown on page *116*.

Note: The drive starts only if possible protection functions (Run enable or Start enable 1 and 2) are activated from I/O or disabled with parameters.

4. Cooling tower fan

This application macro is for cooling tower fan applications where the fan speed is controlled according to the signals received from the transducer. See the figure below.

When using a direct speed reference in the AUTO mode, the speed reference must be connected to analogue input 1 (AI1) and the START command is given with digital input 1 (DI1). In the HAND/OFF mode, the speed reference and START command are given through the control panel (operator keypad).

If process PI(D) is used, the feedback signal must be connected to analogue input 2 (AI2). By default, the setpoint is set from the control panel, but it can also be changed to analogue input 1. Process PI(D) must be commissioned and adjusted with parameters (*Group 40: PROCESS PID SET 1*) or using the PID control assistant (recommended).

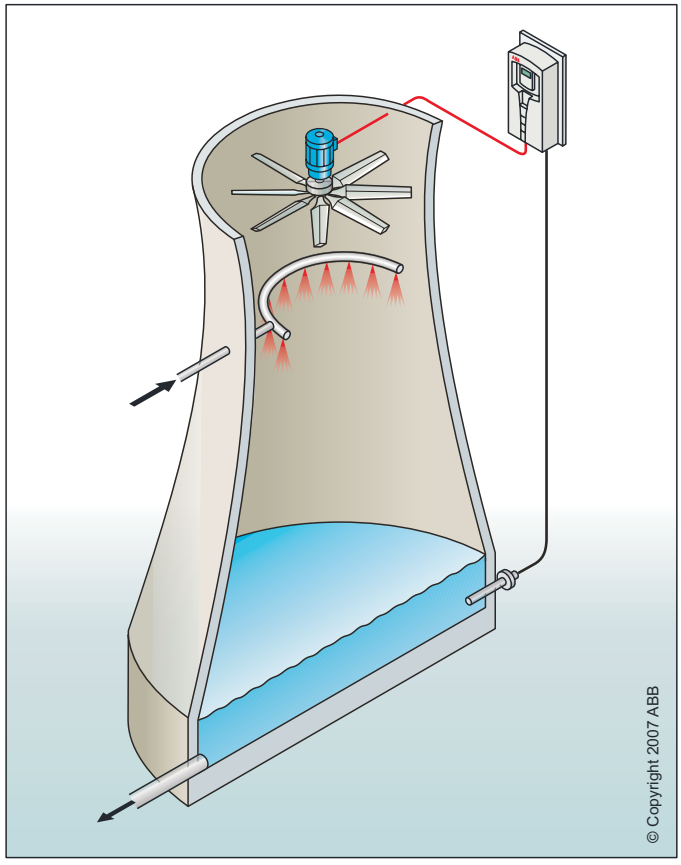

Cooling tower fan

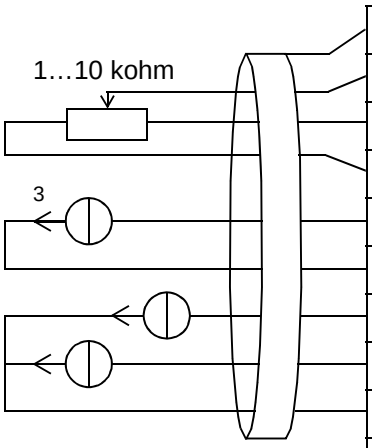

1	SCR	Signal cable shield (screen)
2	AI1	**External reference 1**: 0(2)…10 V or 0(4)…20 mA
3	AGND	Analogue input circuit common
4	10V	Reference voltage +10 V DC
5	AI2	**Actual signal 1**: 0(2)…10 V or 0(4)…20 mA
6	AGND	Analogue input circuit common
7	AO1	**Output frequency**: 0(4)…20 mA
8	AO2	**Output current**: 0(4)…20 mA
9	AGND	Analogue output circuit common
10	24V	Auxiliary voltage output +24 V DC
11	GND	Common for DI return signals
12	DCOM	Digital input common for all
13	DI1	**Start/Stop**: Activation starts the drive
14	DI2	**Run enable**: Deactivation stops the drive [2]
15	DI3	**Constant speed 1** (par. 1202) [1]
16	DI4	**Start enable 1**: Deactivation stops the drive [2]
17	DI5	**Start enable 2**: Deactivation stops the drive [2]
18	DI6	Not used

19	RO1C	Relay output 1 (par. 1401)
20	RO1A	Default operation
21	RO1B	**Ready** => 19 connected to 21
22	RO2C	Relay output 2 (par. 1402)
23	RO2A	Default operation
24	RO2B	**Running** => 22 connected to 24
25	RO3C	Relay output 3 (par. 1403)
26	RO3A	Default operation
27	RO3B	**Fault (-1)** => 25 connected to 27

[1] Not available if PID is activated
[2] Disable/enable with parameters 1601, 1608 and 1609
[3] The sensor needs to be powered. See the manufacturer's instructions. A connection example of a two-wire 24 V DC / 4…20 mA sensor is shown on page *116*.

Note: The drive starts only if possible protection functions (Run enable or Start enable 1 and 2) are activated from I/O or disabled with parameters.

5. Condenser

This application macro is for condenser and liquid cooler applications where the fan speed is controlled according to the signals received from the transducer. See the figure below.

When using a direct speed reference in the AUTO mode, the speed reference must be connected to analogue input 1 (AI1) and the START command is given with digital input 1 (DI1). In the HAND/OFF mode, the speed reference and START command are given through the control panel (operator keypad).

If process PI(D) is used, the feedback signal must be connected to analogue input 2 (AI2). By default, the setpoint is set from the control panel, but it can also be changed to analogue input 1. Process PI(D) must be commissioned and adjusted with parameters (*Group 40: PROCESS PID SET 1*) or using the PID control assistant (recommended).

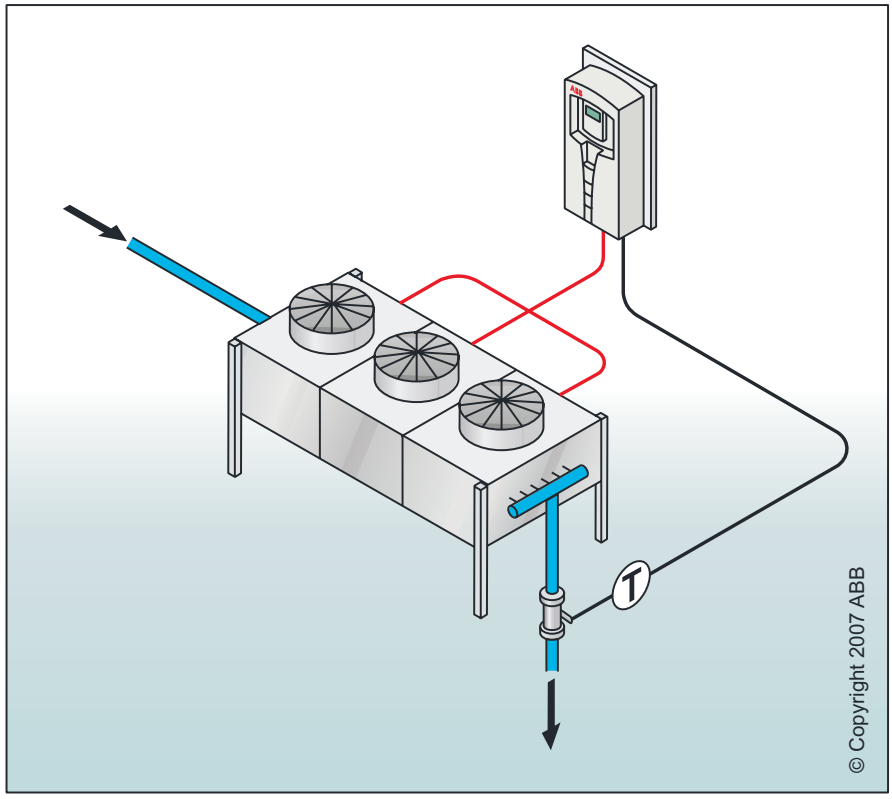

Condenser

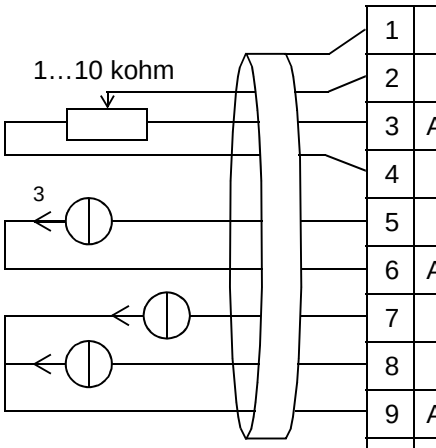

1	SCR	Signal cable shield (screen)
2	AI1	**External reference 1**: 0(2)…10 V or 0(4)…20 mA
3	AGND	Analogue input circuit common
4	10V	Reference voltage +10 V DC
5	AI2	**Actual signal 1**: 0(2)…10 V or 0(4)…20 mA
6	AGND	Analogue input circuit common
7	AO1	**Output frequency**: 0(4)…20 mA
8	AO2	**Output current**: 0(4)…20 mA
9	AGND	Analogue output circuit common
10	24V	Auxiliary voltage output +24 V DC
11	GND	Common for DI return signals
12	DCOM	Digital input common for all
13	DI1	**Start/Stop**: Activation starts the drive
14	DI2	**Run enable**: Deactivation stops the drive [2]
15	DI3	**Constant speed 1** (par. 1202) [1]
16	DI4	**Start enable 1**: Deactivation stops the drive [2]
17	DI5	**Start enable 2**: Deactivation stops the drive [2]
18	DI6	Not used

19	RO1C	Relay output 1 (par. 1401)
20	RO1A	Default operation
21	RO1B	**Ready** => 19 connected to 21
22	RO2C	Relay output 2 (par. 1402)
23	RO2A	Default operation
24	RO2B	**Running** => 22 connected to 24
25	RO3C	Relay output 3 (par. 1403)
26	RO3A	Default operation
27	RO3B	**Fault (-1)** => 25 connected to 27

[1] Not available if PID is activated
[2] Disable/enable with parameters 1601, 1608 and 1609
[3] The sensor needs to be powered. See the manufacturer's instructions. A connection example of a two-wire 24 V DC / 4…20 mA sensor is shown on page *116*.

Note: The drive starts only if possible protection functions (Run enable or Start enable 1 and 2) are activated from I/O or disabled with parameters.

6. Booster pump

This application macro is for booster pump applications where the pump speed is controlled according to the signal received from the transducer. See the figure below.

When using a direct speed reference in the AUTO mode, the speed reference must be connected to analogue input 1 (AI1) and the START command is given with digital input 1 (DI1). In the HAND/OFF mode, the speed reference and START command are given through the control panel (operator keypad).

If process PI(D) is used, the feedback signal must be connected to analogue input 2 (AI2). By default, the setpoint is set from the control panel, but it can also be changed to analogue input 1. Process PI(D) must be commissioned and adjusted with parameters (*Group 40: PROCESS PID SET 1*) or using the PID control assistant (recommended).

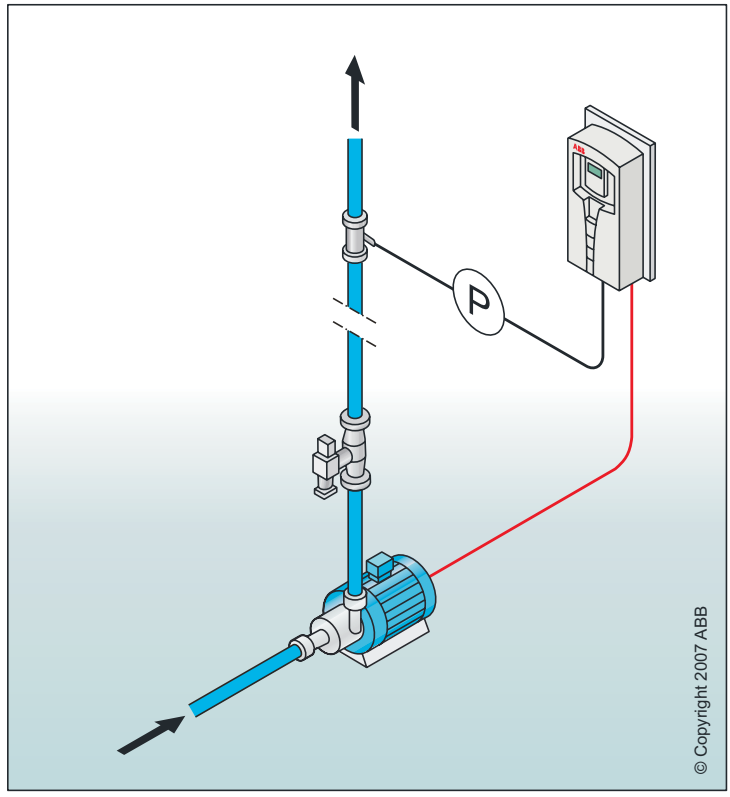

Booster pump

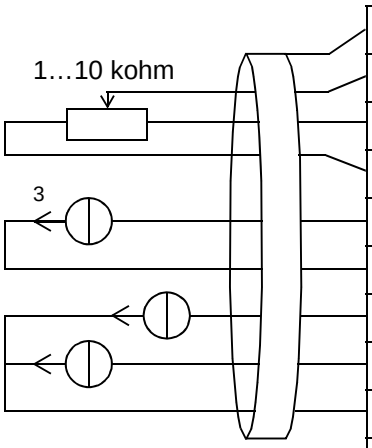

1	SCR	Signal cable shield (screen)
2	AI1	**External reference 1**: 0(2)…10 V or 0(4)…20 mA
3	AGND	Analogue input circuit common
4	10V	Reference voltage +10 V DC
5	AI2	**Actual signal 1**: 0(2)…10 V or 0(4)…20 mA
6	AGND	Analogue input circuit common
7	AO1	**Output frequency**: 0(4)…20 mA
8	AO2	**Output current**: 0(4)…20 mA
9	AGND	Analogue output circuit common
10	24V	Auxiliary voltage output +24 V DC
11	GND	Common for DI return signals
12	DCOM	Digital input common for all
13	DI1	**Start/Stop**: Activation starts the drive
14	DI2	**Run enable**: Deactivation stops the drive [2]
15	DI3	**Constant speed 1** (par. 1202) [1]
16	DI4	**Start enable 1**: Deactivation stops the drive [2]
17	DI5	**Start enable 2**: Deactivation stops the drive [2]
18	DI6	Not used
19	RO1C	Relay output 1 (par. 1401)
20	RO1A	Default operation
21	RO1B	**Ready** => 19 connected to 21
22	RO2C	Relay output 2 (par. 1402)
23	RO2A	Default operation
24	RO2B	**Running** => 22 connected to 24
25	RO3C	Relay output 3 (par. 1403)
26	RO3A	Default operation
27	RO3B	**Fault (-1)** => 25 connected to 27

[1] Not available if PID is activated
[2] Disable/enable with parameters 1601, 1608 and 1609
[3] The sensor needs to be powered. See the manufacturer's instructions. A connection example of a two-wire 24 V DC / 4…20 mA sensor is shown on page *116*.

Note: The drive starts only if possible protection functions (Run enable or Start enable 1 and 2) are activated from I/O or disabled with parameters.

7. Pump alternation

This application macro is intended for pump alternation applications, usually used in booster stations in buildings. The pressure in the network is adjusted by changing the speed of the pump according to the signal received from the pressure transducer and adding auxiliary pumps directly on-line when needed. By default, this macro can use one auxiliary pump. To use more auxiliary pumps, refer to parameter *Group 81: PFA CONTROL*. See the figure below.

When process PI(D) is used in the AUTO mode, the feedback signal must be connected to analogue input 2 (AI2) and the START command is given with digital input 1 (DI1). By default, the setpoint is set from the control panel (operator keypad), but it can also be given through the analogue input 1. Process PI(D) must be commissioned and adjusted with parameters (*Group 40: PROCESS PID SET 1*) or using the PID control assistant (recommended).

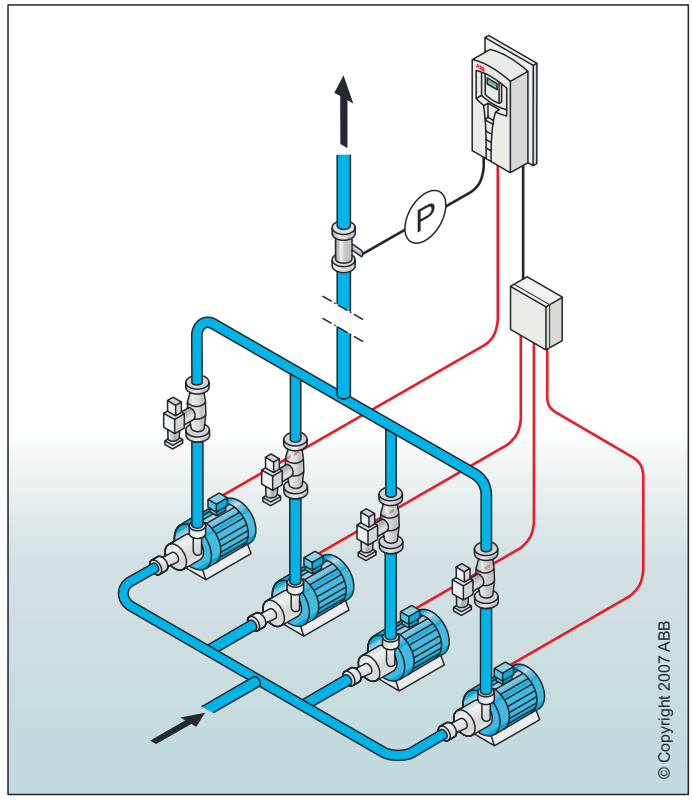

Pump alternation

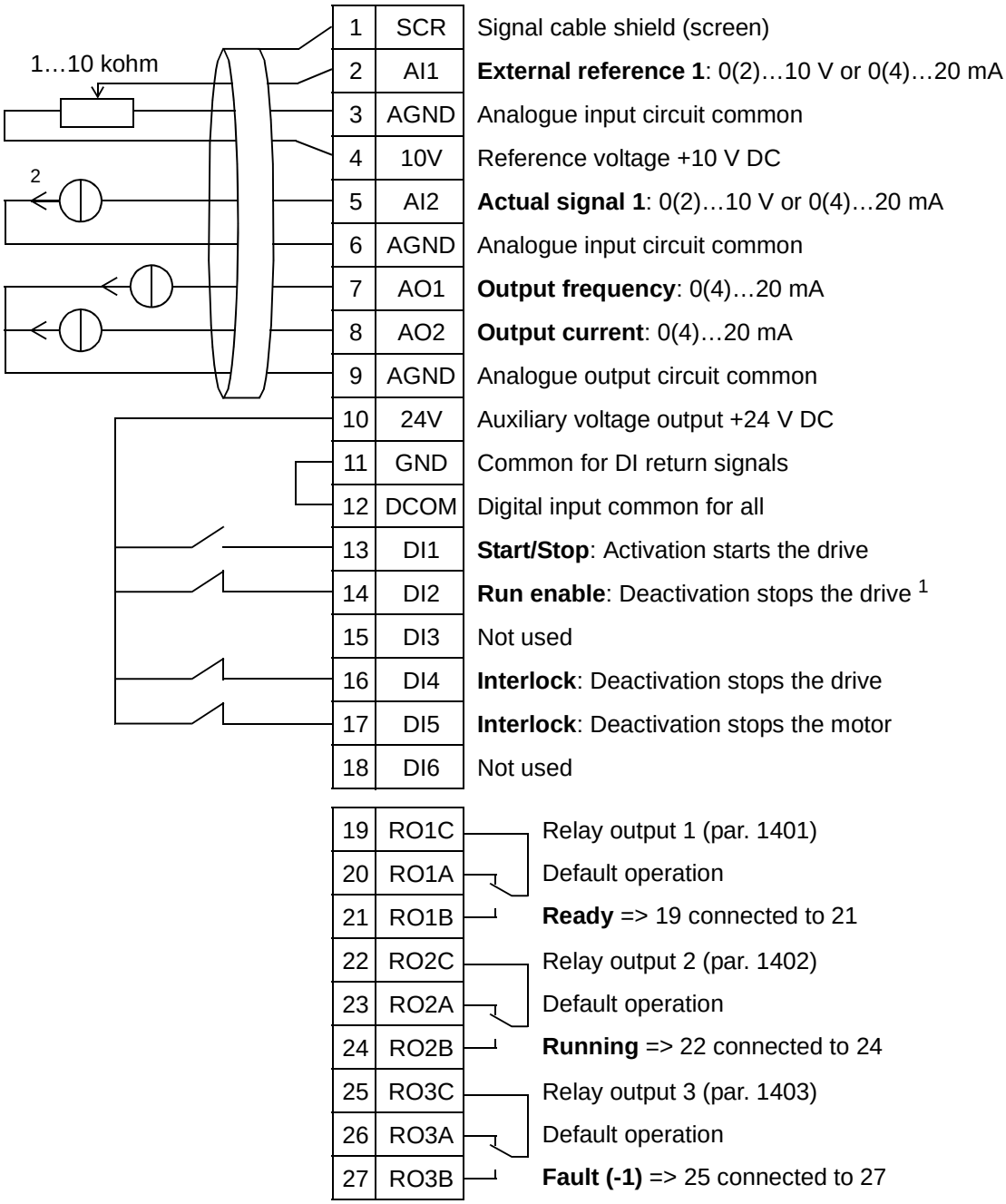

[1] Disable/enable with parameter 1601
[2] The sensor needs to be powered. See the manufacturer's instructions. A connection example of a two-wire 24 V DC / 4…20 mA sensor is shown on page *116*.

Note: The drive starts only if possible protection functions (Run enable or Start enable 1 and 2) are activated from I/O or disabled with parameters.

8. Internal timer

This application macro is for applications where the motor is started and stopped with a built-in timer. This macro has also a boost function which operates the motor after digital input 3 (DI3) has been momentarily activated. An example of the timer usage is shown below. For further information see chapter *Real-time clock and timed functions*.

When using a direct speed reference in the AUTO mode, the speed reference must be connected to analogue input 1 (AI1) and the START command is given with digital input 1 (DI1). In the HAND/OFF mode, the speed reference and START command are given through the control panel (operator keypad).

If process PI(D) is used, the feedback signal must be connected to analogue input 2 (AI2). By default, the setpoint is set from the control panel, but it can also be changed to analogue input 1. Process PI(D) must be commissioned and adjusted with parameters (*Group 40: PROCESS PID SET 1*) or using the PID control assistant (recommended).

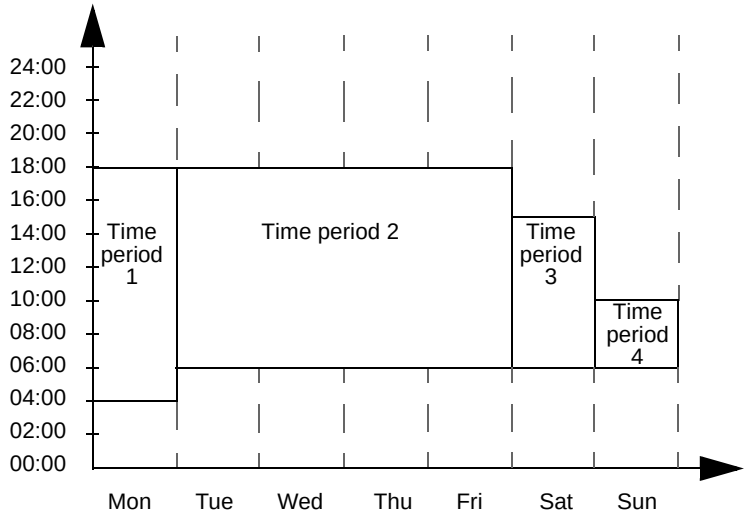

Internal timer

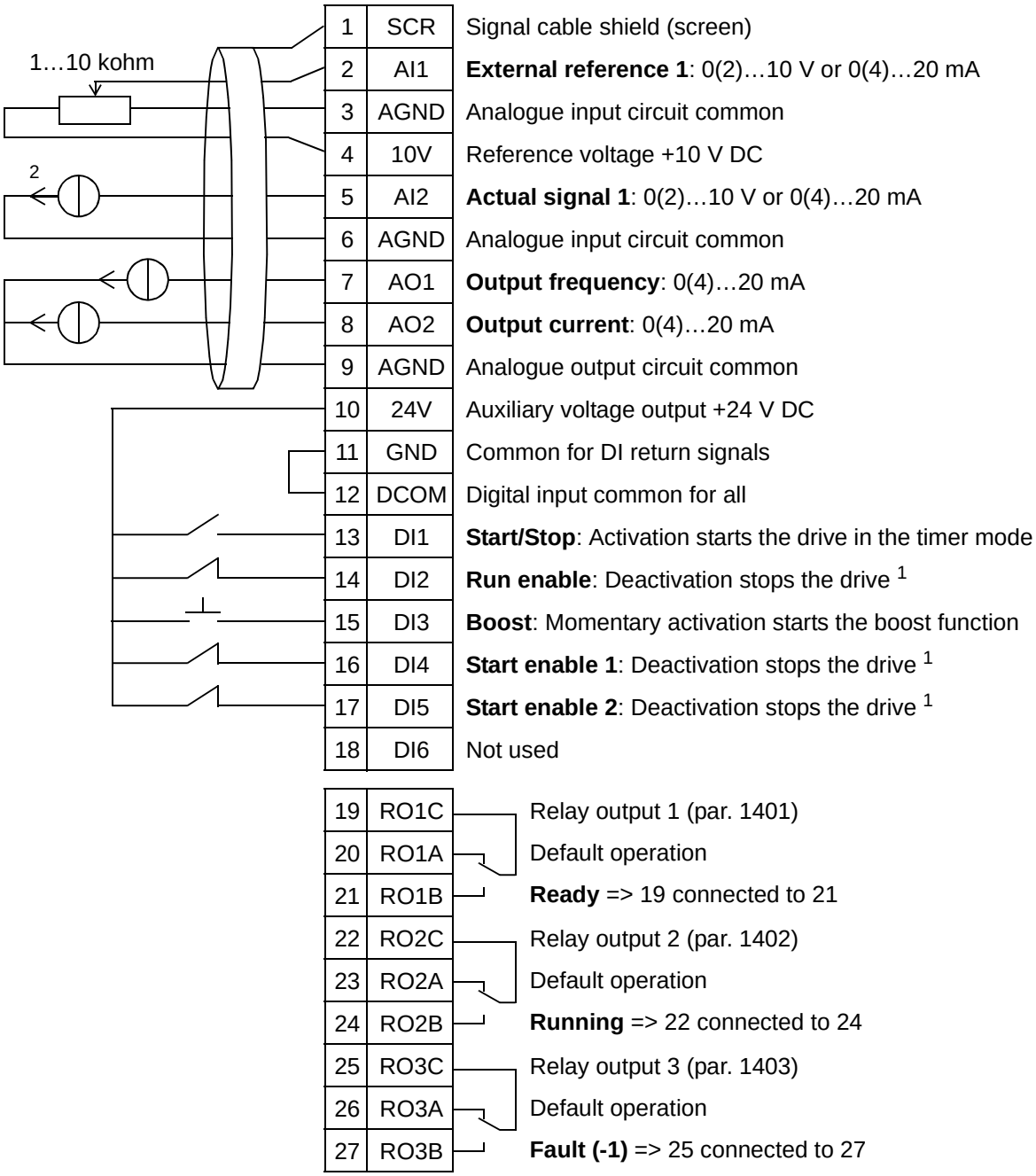

[1] Disable/enable with parameters 1601, 1608 and 1609
[2] The sensor needs to be powered. See the manufacturer's instructions. A connection example of a two-wire 24 V DC / 4…20 mA sensor is shown on page *116*.

Note: The drive starts only if possible protection functions (Run enable or Start enable 1 and 2) are activated from I/O or disabled with parameters.

9. Internal timer with constant speeds / Powered roof ventilator

This application macro is intended e.g. for timed powered roof ventilator applications which alternate between two constant speeds (constant speed 1 and 2) with a built-in timer. This macro also has a boost function, which activates constant speed 2 after digital input 3 (DI3) has been momentarily activated. See the figure below.

For further information, see chapter *Real-time clock and timed functions*.

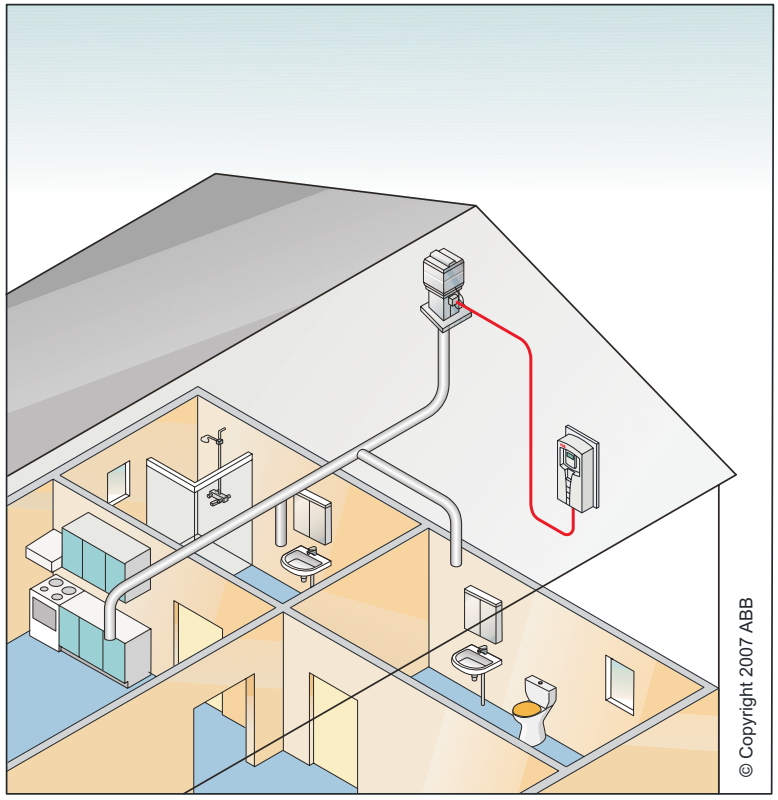

Internal timer with constant speeds

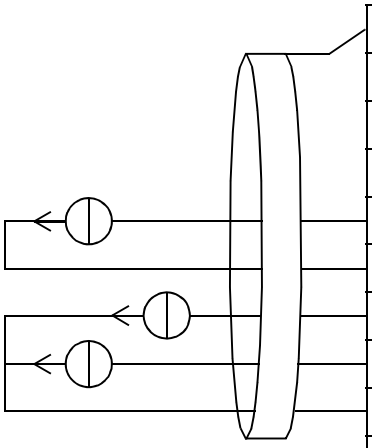

1	SCR	Signal cable shield (screen)
2	AI1	Not used
3	AGND	Analogue input circuit common
4	10V	Reference voltage +10 V DC
5	AI2	Not used
6	AGND	Analogue input circuit common
7	AO1	**Output frequency**: 0(4)…20 mA
8	AO2	**Output current**: 0(4)…20 mA
9	AGND	Analogue output circuit common
10	24V	Auxiliary voltage output +24 V DC
11	GND	Common for DI return signals
12	DCOM	Digital input common for all
13	DI1	**Start/Stop**: Activation starts the drive in the timer mode
14	DI2	**Run enable**: Deactivation stops the drive [1]
15	DI3	**Boost**: Momentary activation starts the boost function
16	DI4	**Start enable 1**: Deactivation stops the drive [1]
17	DI5	**Start enable 2**: Deactivation stops the drive [1]
18	DI6	Not used

19	RO1C	Relay output 1 (par. 1401)
20	RO1A	Default operation
21	RO1B	**Ready** => 19 connected to 21
22	RO2C	Relay output 2 (par. 1402)
23	RO2A	Default operation
24	RO2B	**Running** => 22 connected to 24
25	RO3C	Relay output 3 (par. 1403)
26	RO3A	Default operation
27	RO3B	**Fault (-1)** => 25 connected to 27

[1] Disable/enable with parameters 1601, 1608 and 1609

Note: The drive starts only if possible protection functions (Run enable or Start enable 1 and 2) are activated from I/O or disabled with parameters.

10. Floating point

This application macro is for applications where speed reference needs to be controlled through digital inputs (DI5 and DI6). By activating digital input 5, the speed reference increases. By activating digital input 6, the speed reference decreases. If both digital inputs are active or inactive, the reference does not change.

Note: When constant speed 1 is activated using digital input 3 (DI3), the reference speed is the value of parameter 1202. The value remains as the reference speed when digital input 3 is deactivated.

Floating point

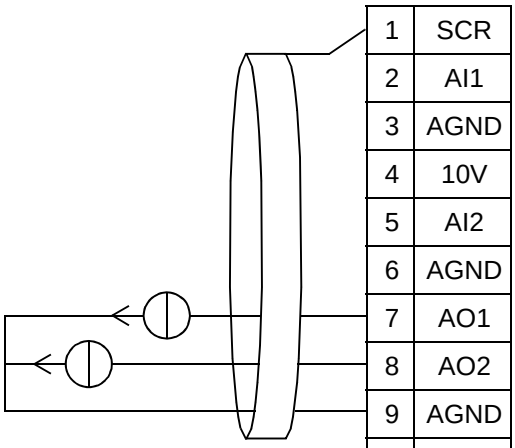

1	SCR	Signal cable shield (screen)
2	AI1	Not used
3	AGND	Analogue input circuit common
4	10V	Reference voltage +10 V DC
5	AI2	Not used
6	AGND	Analogue input circuit common
7	AO1	**Output frequency**: 0(4)…20 mA
8	AO2	**Output current**: 0(4)…20 mA
9	AGND	Analogue output circuit common
10	24V	Auxiliary voltage output +24 V DC
11	GND	Common for DI return signals
12	DCOM	Digital input common for all
13	DI1	**Start/Stop**: Activation starts the drive
14	DI2	**Run enable**: Deactivation stops the drive [2]
15	DI3	**Constant speed 1** (par. 1202) [1]
16	DI4	**Start enable 1**: Deactivation stops the drive [2]
17	DI5	**Reference up**: Activation increases the reference
18	DI6	**Reference down**: Activation decreases the reference

19	RO1C	Relay output 1 (par. 1401)
20	RO1A	Default operation
21	RO1B	**Ready** => 19 connected to 21
22	RO2C	Relay output 2 (par. 1402)
23	RO2A	Default operation
24	RO2B	**Running** => 22 connected to 24
25	RO3C	Relay output 3 (par. 1403)
26	RO3A	Default operation
27	RO3B	**Fault (-1)** => 25 connected to 27

[1] Not available if PID is activated
[2] Disable/enable with parameters 1601 and 1608

Note: The drive starts only if possible protection functions (Run enable or Start enable 1 and 2) are activated from I/O or disabled with parameters.

11. Dual setpoint PID

This application macro is intended for dual setpoint PI(D) applications where process PI(D) controllers setpoint can be changed to another value by activating digital input 3 (DI3). Process PI(D) setpoints are set to the drive internally with parameters 4011 (set 1) and 4111 (set 2).

When using a direct speed reference in the AUTO mode, the speed reference must be connected to analogue input 1 (AI1) and the START command is given with digital input 1 (DI1). In the HAND/OFF mode, the speed reference and START command are given through the control panel (operator keypad).

If process PI(D) is used, the feedback signal must be connected to analogue input 2 (AI2). By default, the setpoint is set from the control panel, but it can also be changed to analogue input 1. Process PI(D) must be commissioned and adjusted with parameters (*Group 40: PROCESS PID SET 1*) or using the PID control assistant (recommended).

Dual setpoint PID

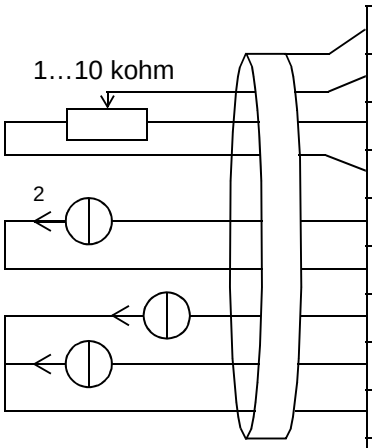

1	SCR	Signal cable shield (screen)
2	AI1	**External reference 1**: 0(2)…10 V or 0(4)…20 mA
3	AGND	Analogue input circuit common
4	10V	Reference voltage +10 V DC
5	AI2	**Actual signal 1**: 0(2)…10 V or 0(4)…20 mA
6	AGND	Analogue input circuit common
7	AO1	**Output frequency**: 0(4)…20 mA
8	AO2	**Output current**: 0(4)…20 mA
9	AGND	Analogue output circuit common
10	24V	Auxiliary voltage output +24 V DC
11	GND	Common for DI return signals
12	DCOM	Digital input common for all
13	DI1	**Start/Stop**: Activation starts the drive
14	DI2	**Run enable**: Deactivation stops the drive [1]
15	DI3	**Setpoint selection**: Set 1 / Set 2
16	DI4	**Start enable 1**: Deactivation stops the drive [1]
17	DI5	**Start enable 2**: Deactivation stops the drive [1]
18	DI6	Not used

19	RO1C	Relay output 1 (par. 1401)
20	RO1A	Default operation
21	RO1B	**Ready** => 19 connected to 21
22	RO2C	Relay output 2 (par. 1402)
23	RO2A	Default operation
24	RO2B	**Running** => 22 connected to 24
25	RO3C	Relay output 3 (par. 1403)
26	RO3A	Default operation
27	RO3B	**Fault (-1)** => 25 connected to 27

[1] Disable/enable with parameters 1601, 1608 and 1609
[2] The sensor needs to be powered. See the manufacturer's instructions. A connection example of a two-wire 24 V DC / 4…20 mA sensor is shown on page *116*.

Note: The drive starts only if possible protection functions (Run enable or Start enable 1 and 2) are activated from I/O or disabled with parameters.

12. Dual setpoint PID with constant speeds

This application macro can be used for applications with two constant speeds, active PID and alternating PID between two setpoints using digital inputs. When using a transmitter, the signal can be used as the process actual value for the PID controller (AI2) or as a direct speed reference (AI1).

PID setpoints are set to the drive internally with parameters 4011 (set 1) and 4111 (set 2) and they can be changed with DI3. PID can be commissioned and adjusted with parameters or with the PID assistant (recommended).

Digital input (DI2) has a factory set control location EXT1/EXT2 selection function. When digital input is active, the control location is EXT2 and PID is activated.

Digital inputs 4 (DI4) and 5 (DI5) have factory set constant speed 1 and 2 functions. Constant speed 1 (par. 1202) is selected by activating digital input 4 (DI4) and constant speed 2 (par. 1203) by activating digital input 5 (DI5).

Dual setpoint PID with constant speeds

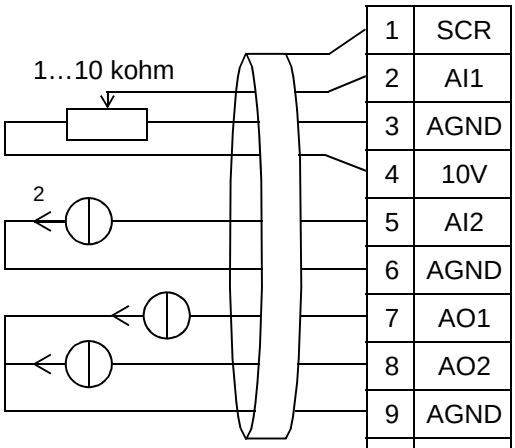

1	SCR	Signal cable shield (screen)
2	AI1	**External reference 1**: 0(2)…10 V or 0(4)…20 mA
3	AGND	Analogue input circuit common
4	10V	Reference voltage +10 V DC
5	AI2	**Actual signal 1**: 0(2)…10 V or 0(4)…20 mA
6	AGND	Analogue input circuit common
7	AO1	**Output frequency**: 0(4)…20 mA
8	AO2	**Output current**: 0(4)…20 mA
9	AGND	Analogue output circuit common
10	24V	Auxiliary voltage output +24 V DC
11	GND	Common for DI return signals
12	DCOM	Digital input common for all
13	DI1	**Start/Stop**: Activation starts the drive
14	DI2	**EXT1/EXT2 selection**: Activation takes PID in use
15	DI3	**Setpoint selection**: Set 1 / Set 2
16	DI4	**Constant speed 1** (par. 1202) [1]
17	DI5	**Constant speed 2** (par. 1203) [1]
18	DI6	Not used
19	RO1C	Relay output 1 (par. 1401)
20	RO1A	Default operation
21	RO1B	**Ready** => 19 connected to 21
22	RO2C	Relay output 2 (par. 1402)
23	RO2A	Default operation
24	RO2B	**Running** => 22 connected to 24
25	RO3C	Relay output 3 (par. 1403)
26	RO3A	Default operation
27	RO3B	**Fault (-1)** => 25 connected to 27

[1] Not available if PID is activated
[2] The sensor needs to be powered. See the manufacturer's instructions. A connection example of a two-wire 24 V DC / 4…20 mA sensor is shown on page *116*.

Note: The drive starts only if possible protection functions (Run enable or Start enable 1 and 2) are activated from I/O or disabled with parameters.

13. E-bypass (USA only)

This application macro is intended to be used with an electronic bypass device, which can be employed to bypass the drive and connect the motor directly on-line.

When using a direct speed reference in the AUTO mode, the speed reference must be connected to analogue input 1 (AI1) and the START command is given with digital input 1 (DI1). In the HAND/OFF mode, the speed reference and START command are given through the control panel (operator keypad).

If process PI(D) is used, the feedback signal must be connected to analogue input 2 (AI2). By default, the setpoint is set from the control panel, but it can also be changed to analogue input 1. Process PI(D) must be commissioned and adjusted with parameters (*Group 40: PROCESS PID SET 1*) or using the PID control assistant (recommended).

E-bypass

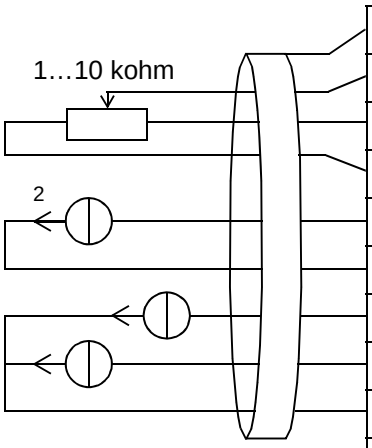

1	SCR	Signal cable shield (screen)
2	AI1	**External reference 1**: 0(2)…10 V or 0(4)…20 mA
3	AGND	Analogue input circuit common
4	10V	Reference voltage +10 V DC
5	AI2	**Actual signal 1**: 0(2)…10 V or 0(4)…20 mA
6	AGND	Analogue input circuit common
7	AO1	**Output frequency**: 0(4)…20 mA
8	AO2	**Output current**: 0(4)…20 mA
9	AGND	Analogue output circuit common
10	24V	Auxiliary voltage output +24 V DC
11	GND	Common for DI return signals
12	DCOM	Digital input common for all
13	DI1	**Start/Stop**: Activation starts the drive
14	DI2	**Run enable**: Deactivation stops the drive [1]
15	DI3	Not used
16	DI4	Not used
17	DI5	Not used
18	DI6	Not used

19	RO1C	Relay output 1 (par. 1401)
20	RO1A	Default operation
21	RO1B	**Ready** => 19 connected to 21
22	RO2C	Relay output 2 (par. 1402)
23	RO2A	Default operation
24	RO2B	**Running** => 22 connected to 24
25	RO3C	Relay output 3 (par. 1403)
26	RO3A	Default operation
27	RO3B	**Fault (-1)** => 25 connected to 27

[1] Disable/enable with parameter 1601
[2] The sensor needs to be powered. See the manufacturer's instructions. A connection example of a two-wire 24 V DC / 4…20 mA sensor is shown on page *116*.

Note: The drive starts only if possible protection functions (Run enable or Start enable 1 and 2) are activated from I/O or disabled with parameters.

14. Hand control

This application macro is intended to be used when commissioning with **Spin the Motor assistant** where all analogue and digital inputs are disabled by default.

The drive is started with the HAND key and giving the speed reference with the arrow keys.

Note: Starting in the AUTO mode requires configuring the I/O with parameters or the assistant or selecting another macro (recommended).

Hand control

1	SCR	Signal cable shield (screen)
2	AI1	Not used
3	AGND	Analogue input circuit common
4	10V	Reference voltage +10 V DC
5	AI2	Not used
6	AGND	Analogue input circuit common
7	AO1	**Output frequency**: 0(4)…20 mA
8	AO2	**Output current**: 0(4)…20 mA
9	AGND	Analogue output circuit common
10	24V	Auxiliary voltage output +24 V DC
11	GND	Common for DI return signals
12	DCOM	Digital input common for all
13	DI1	Not used
14	DI2	Not used
15	DI3	Not used
16	DI4	Not used
17	DI5	Not used
18	DI6	Not used

19	RO1C	Relay output 1 (par. 1401)
20	RO1A	Default operation
21	RO1B	**Ready** => 19 connected to 21
22	RO2C	Relay output 2 (par. 1402)
23	RO2A	Default operation
24	RO2B	**Running** => 22 connected to 24
25	RO3C	Relay output 3 (par. 1403)
26	RO3A	Default operation
27	RO3B	**Fault (-1)** => 25 connected to 27

Note: The drive starts only if possible protection functions (Run enable or Start enable 1 and 2) are activated from I/O or disabled with parameters.

Connection example of a two-wire sensor

Many ACH550 applications use process PI(D) and need a feedback signal from the process. The feedback signal is typically connected to analogue input 2 (AI2). The macro wiring diagrams in this chapter show the connection when a separately powered sensor is used. The figure below gives an example of a connection using a two-wire sensor.

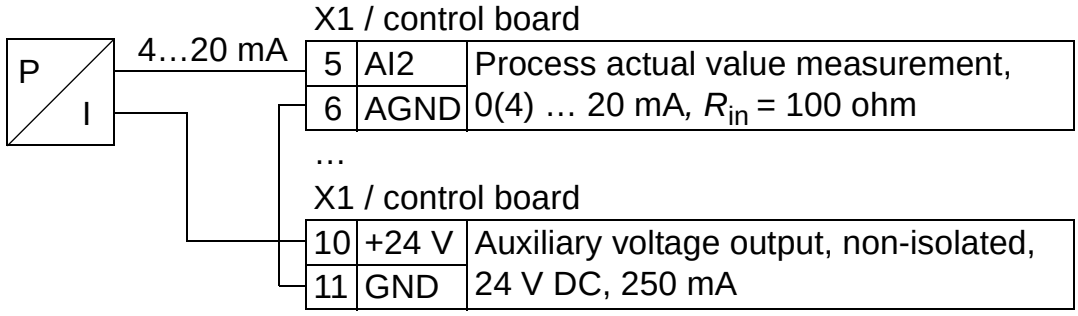

Note: The sensor is supplied through its current output. Thus the output signal must be 4…20 mA, not 0…20 mA.

Real-time clock and timed functions

What this chapter contains

This chapter contains the information for real-time clock and timed functions.

Real-time clock and timed functions

The real-time clock has the following features:

- four daily times
- four weekly times
- timed boost function, e.g. a set constant speed which is on for a certain pre-programmed time. Activated with a digital input.
- timer enable with digital inputs
- timed constant speed selection
- timed relay activation.

For more information, see *Group 36: TIMED FUNCTIONS*.

Note: To be able to use the timed functions, the internal clock has to be set first. For information on the Time and date mode, see chapter *Start-up and control panel*.

Note: The timed functions work only when the control panel is connected to the drive.

Note: Removing the control panel for upload/download purposes does not affect the clock.

Note: Daylight saving changeover is automatic if activated.

Using the timer

The timer is configured in four stages. They are:

1. Enabling the timer. Configure how the timer is activated. See page 120.
2. Setting the time period. Define the time and day when the timer operates. See page 121.
3. Creating the timer. Assign the selected time period to certain timer(s). See page 122.
4. Connecting the parameters. Connect selected parameters to the timer. See page 123.

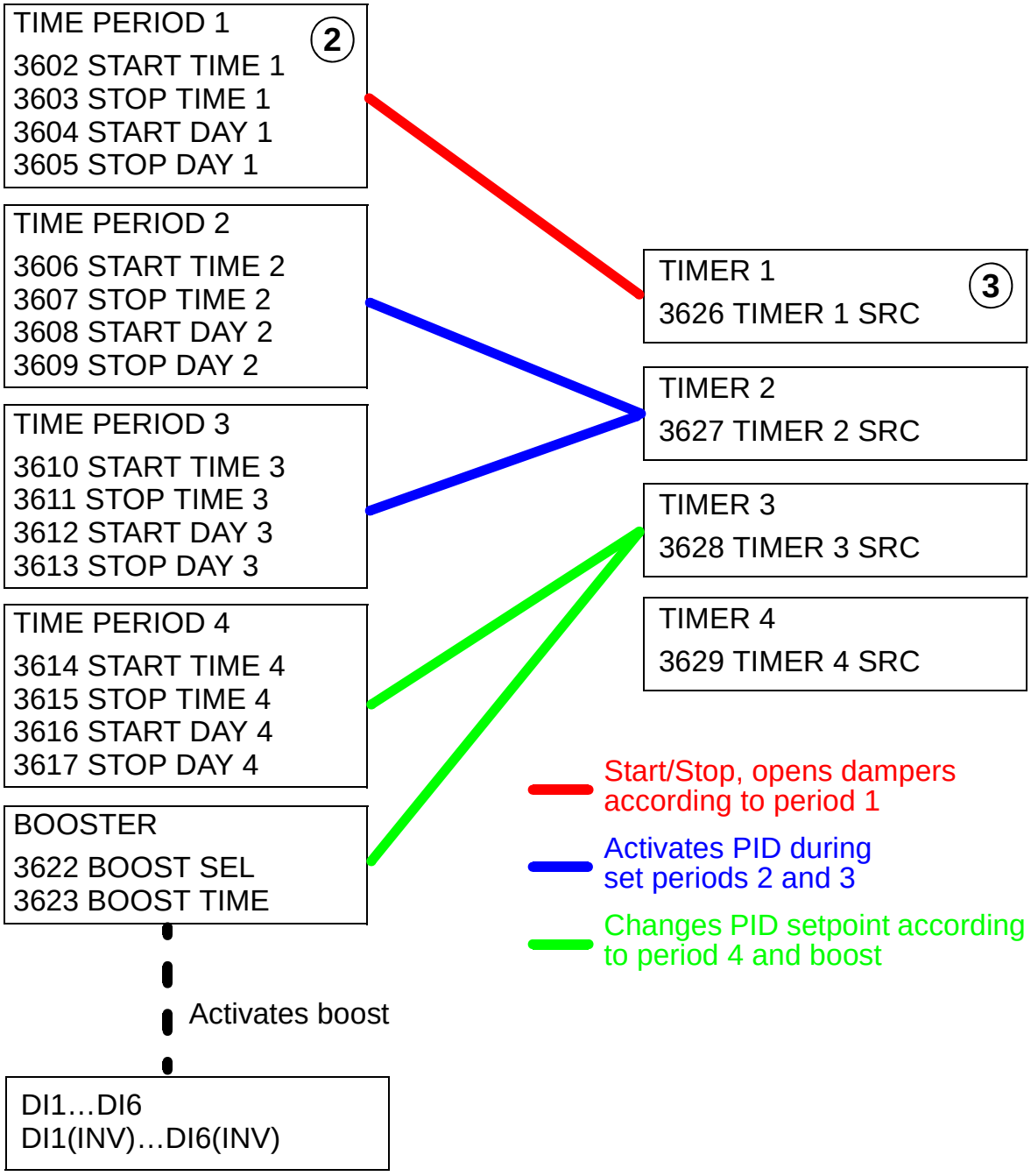

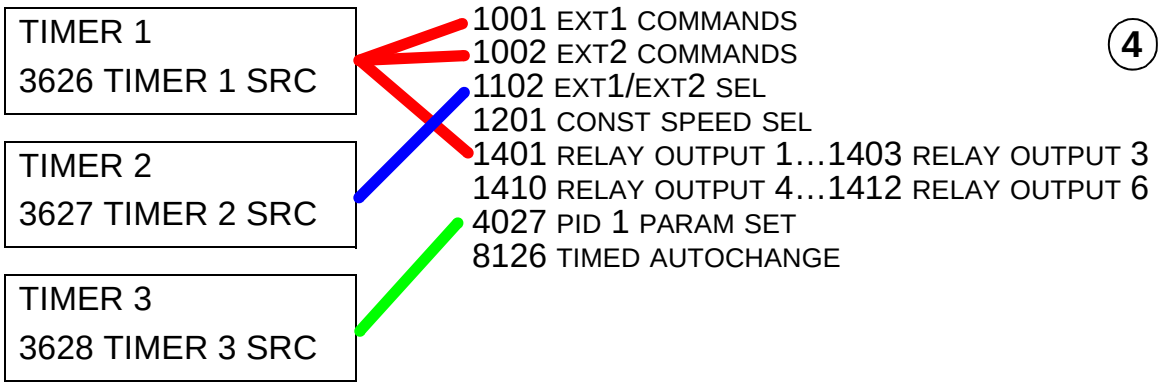

Parameters connected to a timer

The following parameters can be connected to a timer:

- 1001 EXT1 COMMANDS – External start and stop command. Starts the drive when the timer is activated and stops drive when the timer is deactivated.
- 1002 EXT2 COMMANDS – External start and stop command. Starts the drive when the timer is activated and stops the drive when the timer is deactivated.
- 1102 EXT1/EXT2 SEL – Defines the source for start/stop commands and reference signals. Depending on the selection, either EXT 1 or EXT 2 is used as the source for the commands.
- 1201 CONST SPEED SEL – Selects a constant speed when timer 1 is active.
- 1401 RELAY OUTPUT 1 – Timer energizes a relay output.
- 1402 RELAY OUTPUT 2 – Timer energizes a relay output.
- 1403 RELAY OUTPUT 3 – Timer energizes a relay output.
- 4027 PID 1 PARAM SET – Timer selects between two Process PID sets.
- 8126 TIMED AUTOCHANGE – Timer enables the autochange in PFA operation.

1. Enabling the timer

The timer can be enabled from one of the digital inputs or inverted digital inputs.

To enable the timer, follow these steps:

1	Press MENU to go to the main menu.		OFF ↻ 0.0Hz 0.0 Hz 0.0 A 0.0 % 00:00 MENU
2	Select PARAMETERS with the UP/DOWN keys. Then press ENTER to go to the Parameters mode.		OFF ↻MAIN MENU 1 PARAMETERS ASSISTANTS CHANGED PAR EXIT 00:00 ENTER
3	Scroll to group 36 TIMED FUNCTIONS with the UP/DOWN keys and press SEL.		OFF ↻PAR GROUPS 36 36 TIMED FUNCTIONS 37 USER LOAD CURVE 40 PROCESS PID SET 1 41 PROCESS PID SET 2 42 EXT / TRIM PID EXIT 00:00 SEL
4	Scroll to TIMERS ENABLE with the UP/DOWN keys and press EDIT.		OFF ↻PARAMETERS 3601 TIMERS ENABLE NOT SEL 3602 START TIME 1 3603 STOP TIME 1 3604 START DAY 1 EXIT 00:00 EDIT
5	The current value is displayed. Use the UP/DOWN keys to change the value.		OFF ↻PAR EDIT 3601 TIMERS ENABLE NOT SEL [0] CANCEL 00:00 SAVE
6	After selecting the new value, press SAVE to save the value.		OFF ↻PAR EDIT 3601 TIMERS ENABLE DI1(INV) [-1] CANCEL 00:00 SAVE
7	The new value is displayed below the TIMERS ENABLE text. Press EXIT twice to return to the main menu.		OFF ↻PARAMETERS 3601 TIMERS ENABLE DI1(INV) 3602 START TIME 1 3603 STOP TIME 1 3604 START DAY 1 EXIT 00:00 EDIT

Note: Start and Run enable can be assigned to the same digital input.

2. Setting the time period

The example shows how to set a start time. In addition, the stop time and the start and stop days have to be set in the same manner. These constitute a time period.

1	Press MENU to go to the main menu.		OFF ↻ 0.0Hz 0.0 Hz 0.0 A 0.0 % 00:00 MENU
2	Select PARAMETERS with the UP/DOWN keys. Then press ENTER to go to the Parameters mode.		OFF ↻MAIN MENU 1 PARAMETERS ASSISTANTS CHANGED PAR EXIT 00:00 ENTER
3	Scroll to group 36 TIMED FUNCTIONS with the UP/DOWN keys and press SEL.		OFF ↻PAR GROUPS 36 36 TIMED FUNCTIONS 37 USER LOAD CURVE 40 PROCESS PID SET 1 41 PROCESS PID SET 2 42 EXT / TRIM PID EXIT 00:00 SEL
4	Scroll to START TIME 1 with the UP/DOWN keys and press EDIT.		OFF ↻PARAMETERS 3601 TIMERS ENABLE 3602 START TIME 1 00:00:00 3603 STOP TIME 1 3604 START DAY 1 EXIT 00:00 EDIT
5	Change the highlighted part of the time with the UP/DOWN keys. Pressing NEXT moves to the next part. Press SAVE to save the time.		OFF ↻PAR EDIT 3602 START TIME 1 08:00:00 [14400] CANCEL 00:00 NEXT OFF ↻PAR EDIT 3602 START TIME 1 08:30:00 [15300] CANCEL 00:00 NEXT

6	The new value is displayed below the START TIME 1 text. Press EXIT to return to the main menu. Continue with STOP TIME 1, START DAY 1 and STOP DAY 1.		OFF ↻PARAMETERS 3601 TIMERS ENABLE 3602 START TIME 1 08:30:00 3603 STOP TIME 1 3604 START DAY 1 EXIT | 00:00 | EDIT

3. Creating a timer

Different time periods can be collected in a timer and connected to parameters. The timer can act as the source of start/stop and change direction commands, constant speed selection and relay activation signals. Time periods can be in multiple timed functions, but a parameter can only be connected to a single timer. It is possible to create up to four timers.

To create a timer, follow these steps:

1	Press MENU to go to the main menu.		OFF ↻ 0.0Hz 0.0 Hz 0.0 A 0.0 % 00:00 | MENU
2	Select PARAMETERS with the UP/DOWN keys. Then press ENTER to go to the Parameters mode.		OFF ↻MAIN MENU 1 PARAMETERS ASSISTANTS CHANGED PAR EXIT | 00:00 | ENTER
3	Scroll to group 36 TIMED FUNCTIONS with the UP/DOWN keys and press SEL.		OFF ↻PAR GROUPS 36 36 TIMED FUNCTIONS 37 USER LOAD CURVE 40 PROCESS PID SET 1 41 PROCESS PID SET 2 42 EXT / TRIM PID EXIT | 00:00 | SEL
4	Scroll to TIMER 1 SRC with the UP/DOWN keys and press EDIT.		OFF ↻PARAMETERS 3622 BOOST SEL 3623 BOOST TIME 3626 TIMER 1 SRC NOT SEL 3627 TIMER 2 SRC EXIT | 00:00 | EDIT
5	The current value is displayed. Change the value with the UP/DOWN keys.		OFF ↻PAR EDIT 3626 TIMER 1 SRC NOT SEL [0] CANCEL | 00:00 | SAVE

6	Press SAVE to save the new value.		OFF ↻PAR EDIT 3626 TIMER 1 SRC P1 [1] CANCEL 00:00 SAVE
7	The new value is displayed below the TIMER 1 SRC text. Press EXIT to return to the main menu.		OFF ↻PARAMETERS 3622 BOOST SEL 3623 BOOST TIME 3626 TIMER 1 SRC P1 3627 TIMER 2 SRC EXIT 00:00 EDIT

4. Connecting parameters

The parameter example 1001 EXT1 COMMANDS has to be connected to the timer so that the timer acts as the source of start/stop commands. A parameter can only be connected to one timer.

To connect the parameter, follow these steps:

1	Press MENU to go to the main menu.		OFF ↻ 0.0Hz 0.0 Hz 0.0 A 0.0 % 00:00 MENU
2	Select PARAMETERS with the UP/DOWN keys. Then press ENTER to go to the Parameters mode.		OFF ↻MAIN MENU 1 PARAMETERS ASSISTANTS CHANGED PAR EXIT 00:00 ENTER
3	Scroll to group 12 CONSTANT SPEEDS and press SEL.		OFF ↻PAR BACKUP 12 03 FB ACTUAL SIGNALS 04 FAULT HISTORY 10 START/STOP/DIR 11 REFERENCE SELECT 12 CONSTANT SPEEDS EXIT 00:00 SEL
4	Scroll to parameter 1201 CONSTANT SPEED SEL and press EDIT.		OFF ↻PARAMETERS 1201 CONST SPEED SEL DI3 1202 CONST SPEED 1 1203 CONST SPEED 2 1204 CONST SPEED 3 EXIT 00:00 EDIT

5	Select the created timer with the UP/DOWN keys and press SAVE.		OFF ↻PAR EDIT 1201 CONST SPEED SEL TIMER 1 [15] CANCEL 00:00 SAVE
6	The new value is displayed under CONST SPEED SEL. Press EXIT to return to the main menu.		OFF ↻PARAMETERS 1201 CONST SPEED SEL TIMER 1 1202 CONST SPEED 1 1203 CONST SPEED 2 1204 CONST SPEED 3 EXIT 00:00 EDIT

Example of timer use

The following example shows how a timer is used and connected to different parameters. The example uses the same settings as application macro 9 Internal timer with constant speeds. In this example, the timer will be set to function every weekday from 6 AM to 8 AM and 4 PM to 6 PM. On weekends, the timer is activated between 10 AM and 12 AM and 8 PM and 10 PM.

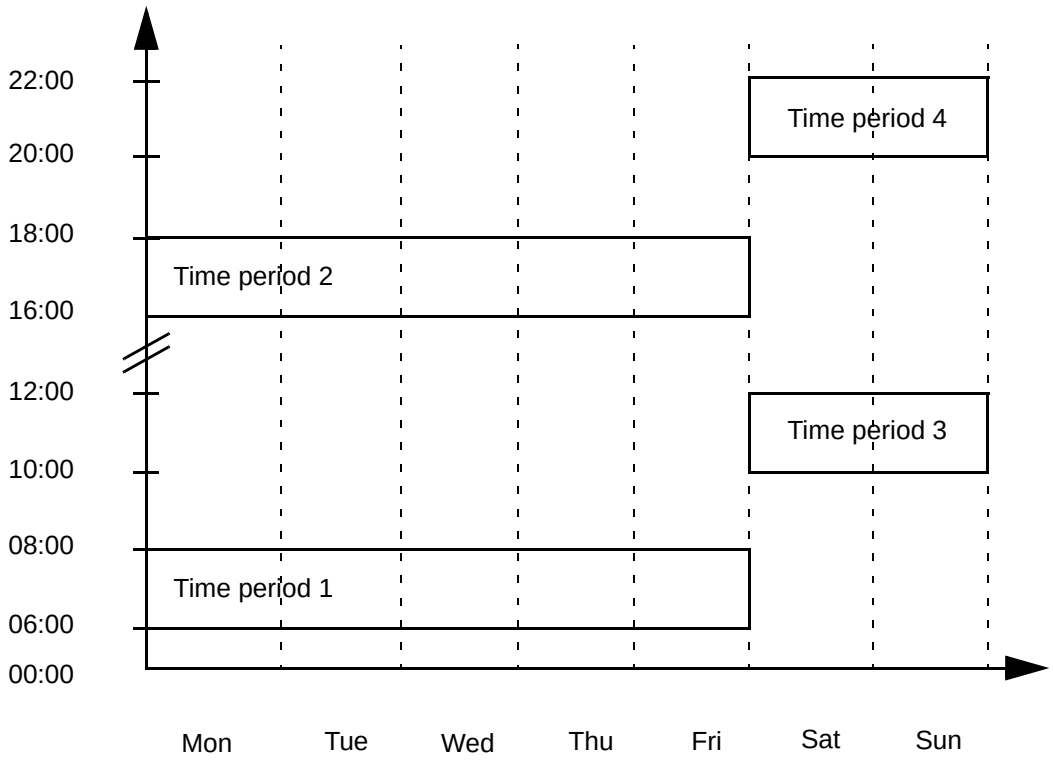

1. Go to parameter *Group 36: TIMED FUNCTIONS* and enable the timer. The timer can be enabled directly or through any free digital input.
2. Go to parameters 3602…3605 and set the start time to 6 AM and stop time to 8 AM. Then set the start and stop days to Monday and Friday. Now time period 1 is set.
3. Go to parameters 3606…3609 and set the start time to 4 PM and stop time to 6 PM. Then set the start and stop days to Monday and Friday. Now time period 2 is set.
4. Go to parameters 3610…3613 and set the start time to 10 AM and stop time to 12 AM. Then set the start and stop days to Saturday and Sunday. Now time period 3 is set.

5. Go to parameters 3614…3617 and set the start time to 8 PM and stop time to 10 PM. Then set the start and stop days to Saturday and Sunday. Now time period 4 is set.
6. Create the timer by going to parameter 3626 TIMER 1 SRC and select all the created time periods (P1+P2+P3+P4).
7. Go to *Group 12: CONSTANT SPEEDS* and select Timer 1 in parameter 1201 CONSTANT SPEED. Now timer 1 acts as the source of constant speed selection.
8. Set the drive to AUTO mode for the timer to function.

Note: For more information about the Timed functions, see *Group 36: TIMED FUNCTIONS* on page *253*.

Boost

The boost function operates the drive for a certain predetermined time. The time is defined with parameters and activated with a selected digital input. The boost time starts running after the digital input has been activated momentarily.

Boost must be connected to the timers and selected when a timer is created. Boost is typically used for amplified air ventilation.

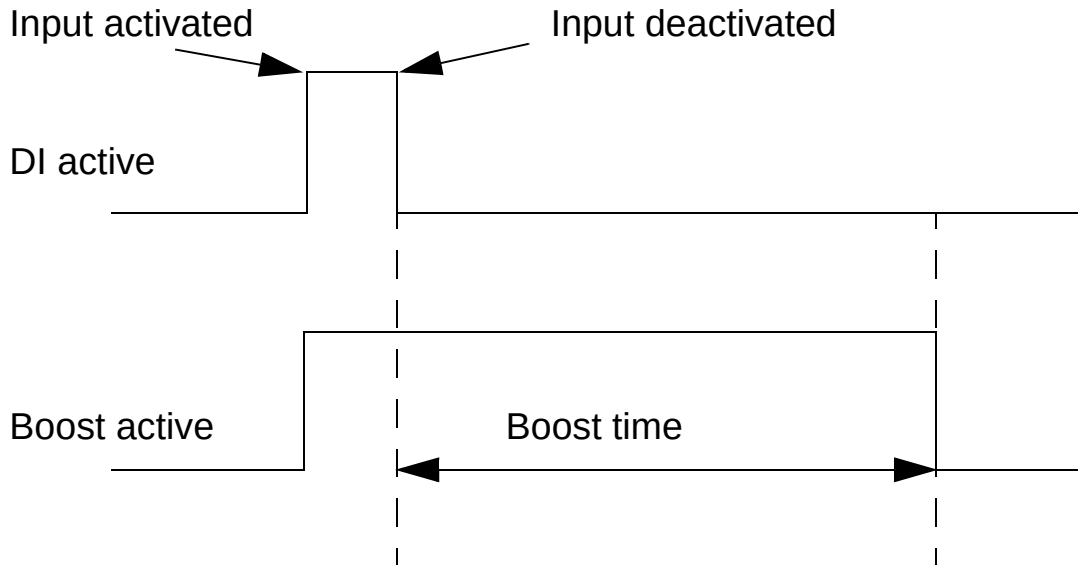

To configure the boost, follow these steps:

1	Press MENU to go to the main menu.		OFF ↻ 0.0Hz 0.0 Hz 0.0 A 0.0 % 00:00 MENU
2	Select PARAMETERS with the UP/DOWN keys. Then press ENTER to go to the Parameters mode.		OFF ↻MAIN MENU 1 PARAMETERS ASSISTANTS CHANGED PAR EXIT 00:00 ENTER
3	Scroll to group 36 TIMED FUNCTIONS with the UP/DOWN keys and press SEL.		OFF ↻PAR GROUPS 36 36 TIMED FUNCTIONS 37 USER LOAD CURVE 40 PROCESS PID SET 1 41 PROCESS PID SET 2 42 EXT / TRIM PID EXIT 00:00 SEL
4	Scroll to BOOST SEL with the UP/DOWN keys and press EDIT.		OFF ↻PARAMETERS 3617 STOP DAY 4 3622 BOOST SEL NOT SEL 3623 BOOST TIME 3626 TIMER 1 SRC EXIT 00:00 EDIT
5	Select a digital input as the source of the boost signal with the UP/DOWN keys. Then press SAVE.		OFF ↻PAR EDIT 3622 BOOST SEL DI3(INV) [-3] CANCEL 00:00 SAVE
6	Scroll to BOOST TIME with the UP/DOWN keys and press EDIT.		OFF ↻PARAMETERS 3622 BOOST SEL 3623 BOOST TIME 00:00:00 3626 TIMER 1 SRC 3626 TIMER 2 SRC EXIT 00:00 EDIT

7	Change the highlighted part of the time with the UP/ DOWN keys. Pressing NEXT moves to the next part. Press SAVE to save the time.		OFF ↻PAR EDIT 3623 BOOST TIME 00:00:00 [0] CANCEL | 00:00 | NEXT OFF ↻PAR EDIT 3623 BOOST TIME 00:30:00 [900] CANCEL | 00:00 | NEXT
8	Scroll to TIMER 1 SRC and press EDIT.		OFF ↻PARAMETERS 3622 BOOST SEL 3623 BOOST TIME 3626 TIMER 1 SRC NOT SEL 3627 TIMER 2 SRC EXIT | 00:00 | EDIT
9	Select BOOST with the UP/ DOWN keys and press SAVE.		OFF ↻PAR EDIT 3626 TIMER 1 SRC BOOST [16] CANCEL | 00:00 | SAVE
10	The new value is displayed under TIMER 1 SRC. Press EXIT to return to the main menu.		OFF ↻PARAMETERS 3622 BOOST SEL 3623 BOOST TIME 3626 TIMER 1 SRC BOOST 3627 TIMER 2 SRC EXIT | 00:00 | EDIT

Serial communications

What this chapter contains

This chapter contains the information for the serial communications of the ACH550.

System overview

The drive can be connected to an external control system, usually a fieldbus controller, either:

- via the standard RS485 interface at terminals X1:28…32 on the control board of the drive. The standard RS485 interface provides the following embedded fieldbus (EFB) protocols:
  - Modbus
  - Metasys N2
  - APOGEE FLN
  - BACnet.

  For more information, refer to manuals *Embedded Fieldbus (EFB) Control* [3AFE68320658 (English)] and *BACnet Protocol* [3AUA0000004591 (English)].

or

- via a plug-in fieldbus adapter (EXT FBA) module mounted in expansion slot 2 of the drive. EXT FBAs must be ordered separately. EXT FBAs include:
  - LonWorks
  - Ethernet (Modbus/TCP, Ethernet/IP)
  - PROFIBUS DP
  - CANopen
  - DeviceNet
  - ControlNet

  For more information, refer to the appropriate adapter module documentation.

Both the embedded fieldbus (EFB) protocol and the plug-in fieldbus adapter (EXT FBA) module and are activated with parameter 9802 COMM PROT SEL.

The ACH550 panel provides a Serial Communication assistant, which helps you in setting up serial communication.

The figure below shows the ACH550 fieldbus control.

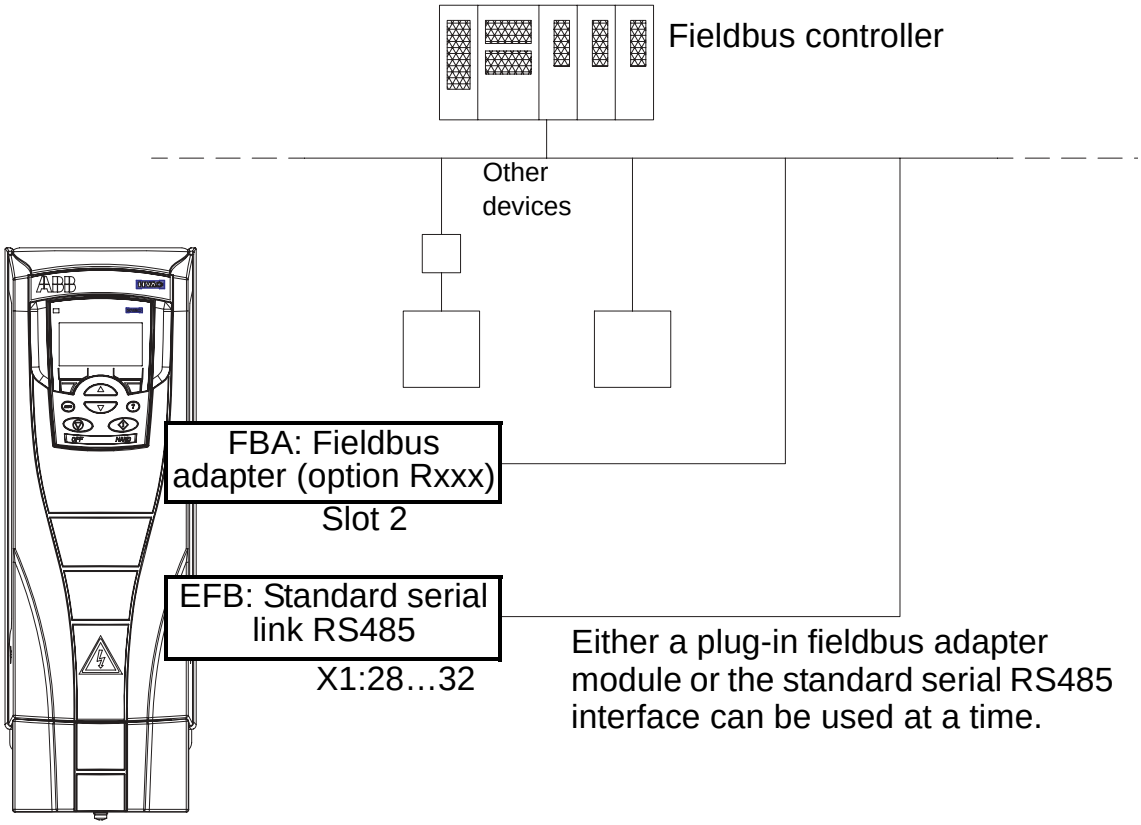

When using serial communication, the ACH550 can:

- receive all of its control information from the fieldbus, or
- be controlled from some combination of fieldbus control and other available control locations, such as digital or analogue inputs, and the control panel (operator keypad), or
- be monitored only (drive signals, status data and I/O).

Embedded fieldbus (EFB)

To reduce noise on the network, terminate the RS485 network using 120 ohm resistors at both ends of the network. See the diagram below.

Use preferably three conductors and a shield for the connection.

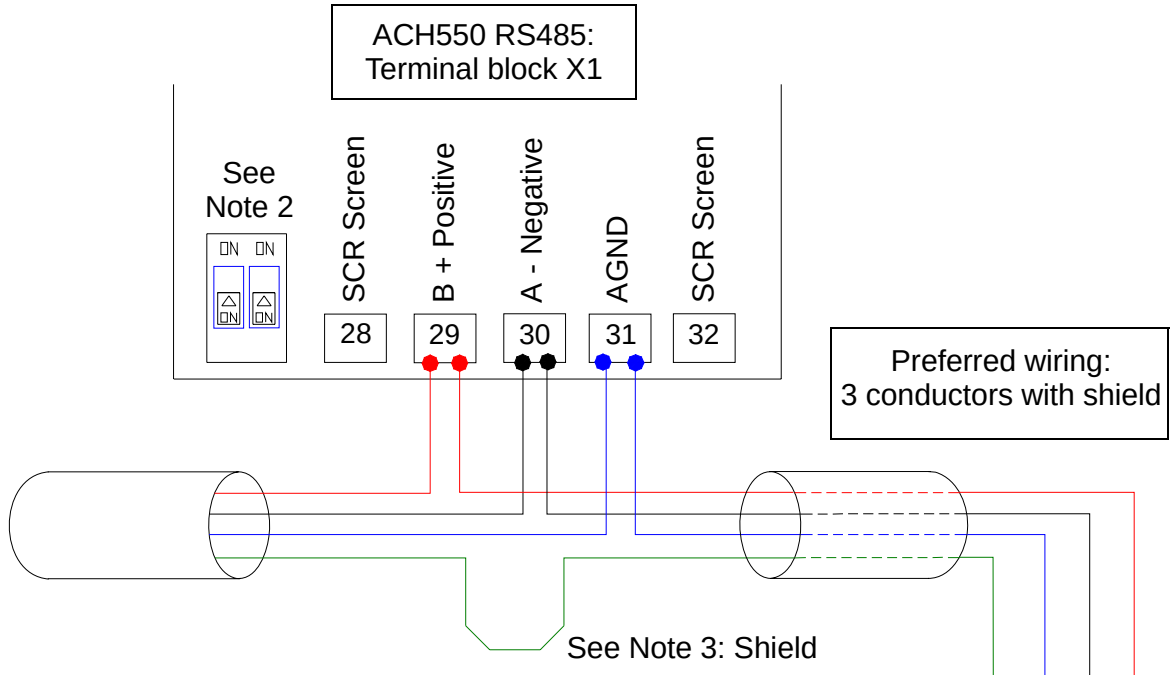

Notes:

1. Use three-conductor cable – Tie the third wire to AGND: X1:31.
2. Set switch J2 to OFF. Bus termination is an active network: Pull up & pull down (BIAS) resistors are on board the ACH550 drive.
3. Tie shield wires together at the drive – Do NOT terminate at SCR.
4. Terminate shield ONLY at the “Ground” terminal in the building automation controller.
5. Terminate AGND wire at the “Reference” terminal in the building automation controller.

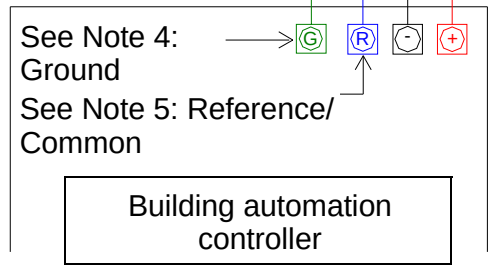

Setting up communication through EFB

Before configuring the drive for fieldbus control, the drive must be connected to the fieldbus according to the instructions given in this manual and manuals *Embedded Fieldbus (EFB) Control*

[3AFE68320658 (English)] and *BACnet Protocol* [3AUA0000004591 (English)].

The communication between the drive and the fieldbus is then activated by selecting the appropriate protocol with parameter 9802 COMM PROT SEL. After the communication is initialized, the configuration parameters become available in parameter *Group 53: EFB PROTOCOL* in the drive.

Setting up EFB with the Serial Communication assistant is shown below. The related parameters are described starting from page *134*.

Setting up EFB with the Serial Communication assistant

To set up EFB, follow these steps:

1	Press MENU to go to the main menu.		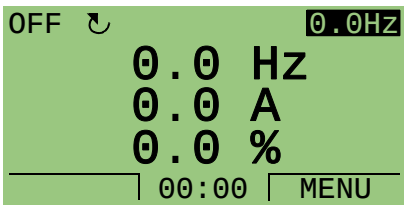
2	Select ASSISTANTS with the UP/DOWN keys and press ENTER.		
3	Scroll to Serial Communication and press SEL.		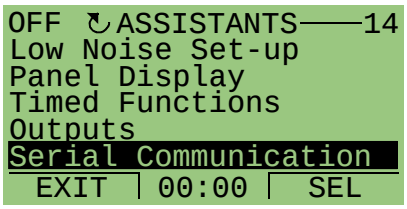
4	Select the protocol with the UP/DOWN keys and press SAVE.		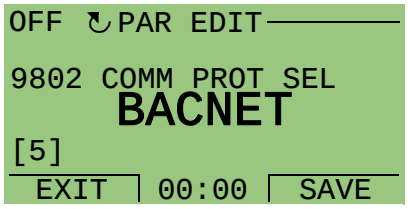
5	Continue the guided set-up with the assistant.		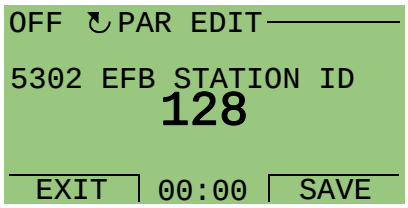

Changes made to EFB communication parameters (group 53) do not take effect until you perform one of the following:

- Cycle the drive power OFF and ON, or
- Set parameter 5302 to 0, and then back to a unique EFB station ID.

Protocol selection

Code	Description	Range
9802	**COMM PROT SEL** Selects the communication protocol. 0 = NOT SEL – No communication protocol selected. 1 = STD MODBUS – The drive communicates via a Modbus controller via the RS485 serial link (X1 communications, terminal). 2 = N2 – The drive communicates via an N2 controller via the RS485 serial link (X1 communications, terminal). • See also parameter *Group 53: EFB PROTOCOL*. 3 = FLN – The drive communicates via an FLN controller via the RS485 serial link (X1 communications, terminal). • See also parameter *Group 53: EFB PROTOCOL*. 5 = BACNET – The drive communicates via a BACnet controller via the RS485 serial link (X1 communications, terminal). • See also parameter *Group 53: EFB PROTOCOL*.	**0…5**

EFB communication parameters

Code	Description	Range
5301	**EFB PROTOCOL ID** Contains the identification and program revision of the protocol. • Format: XXYY, where xx = protocol ID, and YY = program revision.	**0…0xFFFF**
5302	**EFB STATION ID** Defines the node address of the RS485 link. • The node address on each unit must be unique.	**0…65535**
5303	**EFB BAUD RATE** Defines the communication speed of the RS485 link in kbits per second (kb/s). 1.2 kb/s 2.4 kb/s 4.8 kb/s 9.6 kb/s 19.2 kb/s 38.4 kb/s 57.6 kb/s 76.8 kb/s	**1.2, 2.4, 4.8, 9.6, 19.2, 38.4, 57.6, 76.8 kb/s**

Code	Description	Range
5304	**EFB PARITY** Defines the data length parity and stop bits to be used with the RS485 link communication. • The same settings must be used in all on-line stations. 0 = 8 NONE 1 – 8 data bits, no parity, one stop bit. 1 = 8 NONE 2 – 8 data bits, no parity, two stop bits. 2 = 8 EVEN 1 – 8 data bits, even parity, one stop bit. 3 = 8 ODD 1 – 8 data bits, odd parity, one stop bit.	**0…3**
5305	**EFB CTRL PROFILE** Selects the communication profile used by the EFB protocol. No effect on BACnet behavior. 0 = ABB DRV LIM – Operation of the Control Word and Status Word conforms to ABB Drives Profile, as used in ACS400. 1 = DCU PROFILE – Operation of Control/Status Words conforms to 32-bit DCU Profile. 2 = ABB DRV FULL – Operation of Control/Status Words conforms to ABB Drives Profile, as used in ACS600/800.	**0…2**
5306	**EFB OK MESSAGES** Contains a count of valid messages received by the drive. • During normal operation, this counter is increasing constantly.	**0…65535**
5307	**EFB CRC ERRORS** Contains a count of the messages with a CRC error received by the drive. For high counts, check: • Ambient electro-magnetic noise levels – high noise levels generate errors. • CRC calculations for possible errors.	**0…65535**
5308	**EFB UART ERRORS** Contains a count of the messages with a character error received by the drive.	**0…65535**
5309	**EFB STATUS** Contains the status of the EFB protocol. 0 = IDLE – EFB protocol is configured, but not receiving any messages. 1 = EXECUT INIT – EFB protocol is initializing. 2 = TIME OUT – A time-out has occurred in the communication between the network master and the EFB protocol. 3 = CONFIG ERROR – EFB protocol has a configuration error. 4 = OFF-LINE – EFB protocol is receiving messages that are NOT addressed to this drive. 5 = ON-LINE – EFB protocol is receiving messages that are addressed to this drive. 6 = RESET – EFB protocol is performing a hardware reset. 7 = LISTEN ONLY – EFB protocol is in listen-only mode.	**0…7**

Code	Description	Range
5318	**EFB PAR 18** For Modbus only: Slave response delay. Sets additional delay in milliseconds before the drive begins transmitting response to the master request.	**0…65535**

BACnet specific communication parameters

5310	**EFB PAR 10** Sets the BACnet MS/TP response turn-around time, in milliseconds.	**0…65535**
5311	**EFB PAR 11** Sets, together with parameter 5317 EFB PAR 17, BACnet instance IDs: • For the range 1 to 65535: This parameter sets the ID directly (5317 must be 0). For example, the following values set the ID to 49134: 5311 = 49134 and 5317 = 0. • For IDs > 65535: The ID equals parameter 5311's value plus 10000 times parameter 5317's value. For example, the following values set the ID to 71234: 5311 = 1234 and 5317 = 7.	**0…65535**
5312	**EFB PAR 12** Sets the BACnet Device Object Max Info Frames property.	**0…65535**
5313	**EFB PAR 13** Sets the BACnet Device Object Max Master property.	**0…65535**
5316	**EFB PAR 16** Indicates the count of MS/TP tokens passed to this drive.	**0…65535**
5317	**EFB PAR 17** Works with parameter 5311 to set BACnet instance IDs. See parameter 5311.	**0…65535**

Fieldbus adapter (EXT FBA)

Mechanical and electrical installation of the plug-in fieldbus

The plug-in fieldbus adapter (EXT FBA) module is inserted into expansion slot 2 of the drive.

The module is held in place with plastic retaining clips and two screws. The screws also provide the earthing of the cable shield connected to the module and interconnect the GND signals of the module and the control board of the drive.

On installation of the module, the signal and power connection to the drive is automatically established through the 34-pin connector.

Mounting procedure (See the figures on page *138*):

1. Insert the module carefully into expansion slot 2 of the drive until the retaining clips lock the module into position.
2. Fasten the two screws (included) to the stand-offs.
3. Open the appropriate knockout in the conduit/gland box and install the cable clamp/gland for the network cable.
4. Route the network cable through the cable clamp/gland.
5. Connect the network cable to the network connector of the module. Detailed configuration is available in the appropriate EXT FBA manual.
6. Tighten the cable clamp/gland.
7. Install the conduit/gland box cover (1 screw).

The figure below shows the mounting of the fieldbus module.

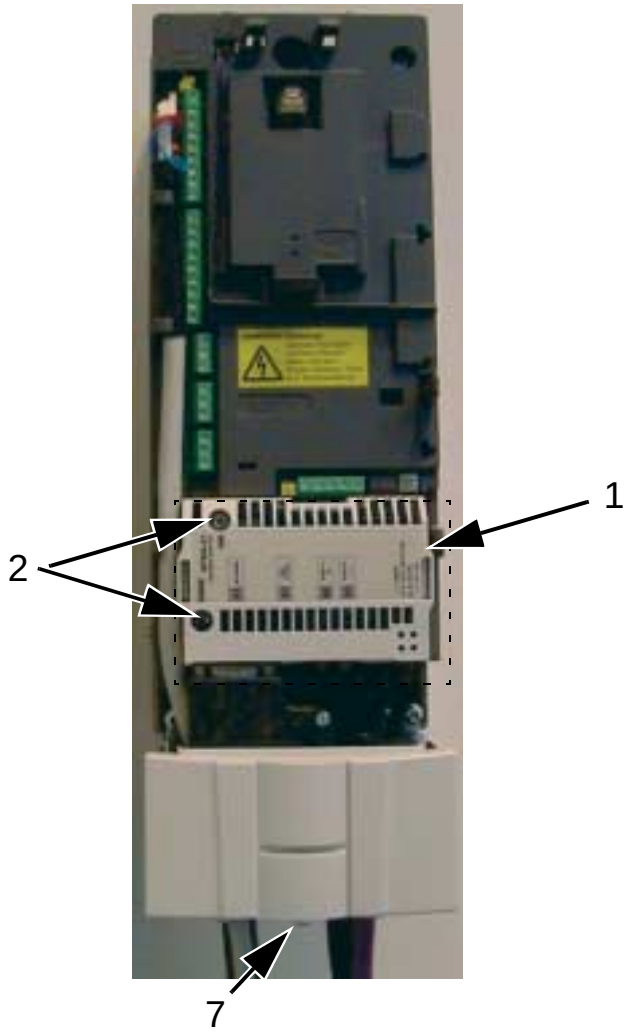

The figure below shows the connecting of the network cable.

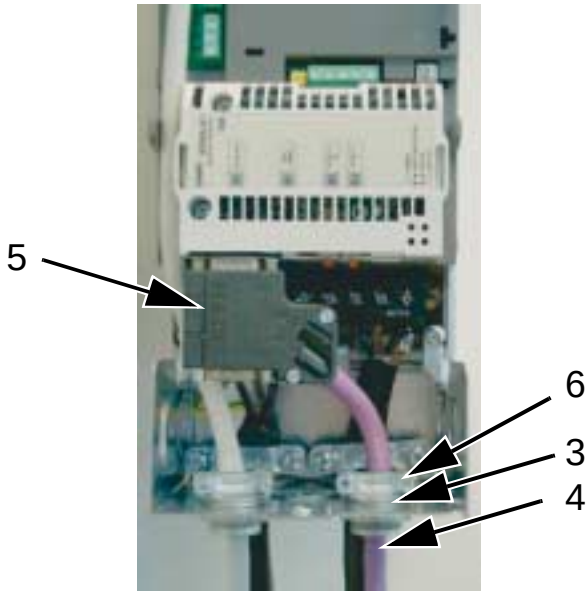

Note: Correct installation of the screws is essential for fulfilling the EMC requirements and for proper operation of the module.

Note: Install the input power and motor cables first.

Setting up communication through a plug-in fieldbus adapter (EXT FBA) module

Before configuring the drive for fieldbus control, the fieldbus adapter (EXT FBA) module must be mechanically and electrically installed according to the instructions given in this manual and the fieldbus adapter module manual.

The communication between the drive and the fieldbus adapter module is then activated by setting parameter 9802 COMM PROT SEL to EXT FBA. After the communication is initialized, the configuration parameters of the module become available in parameter *Group 51: EXT COMM MODULE* in the drive.

Setting up FBA with the Serial Communication assistant is shown below. The related parameters are described starting from page *140*.

Setting up FBA with the Serial Communication assistant

To set up FBA, follow these steps:

1	Press MENU to go to the main menu.		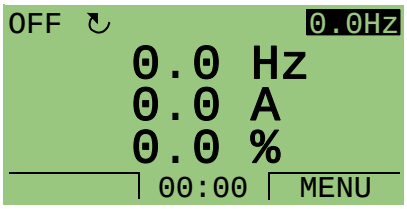
2	Select ASSISTANTS with the UP/DOWN keys and press ENTER.		
3	Scroll to Serial Communication and press SEL.		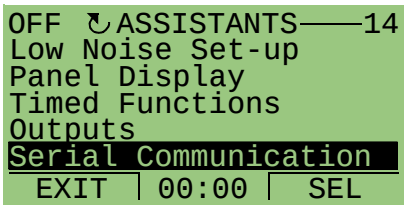

4	Select EXT FBA with the UP/DOWN keys and press SAVE.		OFF ↻PAR EDIT 9802 COMM PROT SEL EXT FBA [4] EXIT 00:00 SAVE
5	The assistant recognizes the type of the connected fieldbus adapter module and guides you through the necessary set-up. If the name of FBA parameter is not self-explanatory, the assistant first tells you which information is expected from you.		OFF ↻ASSISTANT On next screen set the node number. EXIT 00:00 OK OFF ↻PAR EDIT 5102 FBA PAR 2 3 EXIT 00:00 SAVE

The new settings will take effect when the drive is next powered up, or when parameter 5127 is activated.

Protocol selection

Code	Description	Range
9802	**COMM PROT SEL** Selects the communication protocol. 0 = NOT SEL – No communication protocol selected. 4 = **EXT FBA** – The drive communicates via a fieldbus adapter module in option slot 2 of the drive. • See also parameter *Group 51: EXT COMM MODULE*.	**0…5**

FBA communication parameters

Code	Description	Range
5101	**FBA TYPE** Displays the type of the connected fieldbus adapter module. 0 = NOT DEFINED – Module not found or not connected. Check chapter *Mechanical installation* in the fieldbus user's manual and check that parameter 9802 is set to 4 = EXT FBA. 1 = PROFIBUS-DP 16 = INTERBUS 21 = LONWORKS 32 = CANopen 37 = DEVICENET 64 = MODBUS PLUS 101 = CONTROLNET 128 = ETHERNET	

Code	Description	Range
5102 … 5126	**FB PAR 2…FB PAR 26** Refer to the communication module documentation for more information on these parameters.	**0…65535**
5127	**FBA PAR REFRESH** Validates any changed fieldbus parameter settings. 0 = DONE – Refreshing done. 1 = REFRESH – Refreshing. • After refreshing, the value reverts automatically to DONE.	**0=DONE, 1=REFRESH**
5128	**FILE CPI FW REV** Displays the CPI firmware revision of the drive's fieldbus adapter configuration file. Format is xyz, where: • x = major revision number • y = minor revision number • z = correction number. **Example:** 107 = revision 1.07	**0…0xFFFF**
5129	**FILE CONFIG ID** Displays the revision of the drive's fieldbus adapter module's configuration file identification. • File configuration information depends on the drive application program.	**0…0xFFFF**
5130	**FILE CONFIG REV** Contains the revision of the drive's fieldbus adapter module configuration file. **Example:** 1 = revision 1	**0…0xFFFF**
5131	**FBA STATUS** Contains the status of the adapter module. 0 = IDLE – Adapter not configured. 1 = EXECUT INIT – Adapter is initializing. 2 = TIME OUT – A time-out has occurred in the communication between the adapter and the drive. 3 = CONFIG ERROR – Adapter configuration error. • The major or minor revision code of the adapter's CPI firmware revision differs from that stated in the drive's configuration file. 4 = OFF-LINE – Adapter is off-line. 5 = ON-LINE – Adapter is on-line. 6 = RESET – Adapter is performing a hardware reset.	**0…6**
5132	**FBA CPI FW REV** Contains the revision of the module's CPI program. Format is xyz, where: • x = major revision number • y = minor revision number • z = correction number. **Example:** 107 = revision 1.07	**0…0xFFFF**

Code	Description	Range
5133	**FBA APPL FW REV** Contains the revision of the module's application program. Format is xyz, where: • x = major revision number • y = minor revision number • z = correction number. **Example:** 107 = revision 1.07	**0…0xFFFF**

Drive control parameters

After the fieldbus communication has been set up, the drive control parameters listed in the tables below should be checked and adjusted where necessary.

The “Setting for fieldbus control & description” column gives the value to use when the fieldbus interface is the desired source or destination for that particular signal as well as a description of the parameter.

For fieldbus signal routes and message composition, see manuals *Embedded Fieldbus (EFB) Control* [3AFE68320658 (English)] and *BACnet Protocol* [3AUA0000004591 (English)].

Control command source selection

Code	Setting for fieldbus control & description	Range
1001	**EXT1 COMMANDS** Defines external control location 1 (EXT1) – the configuration of start, stop and direction commands. 10 = COMM – Assigns the fieldbus Command Word as the source for the start/stop and direction commands. • Bits 0,1, 2 of Command Word 1 (parameter 0301) activates the start/stop and direction commands. • See the fieldbus user’s manual for detailed instructions.	**0…14**
1002	**EXT2 COMMANDS** Defines external control location 2 (EXT2) – the configuration of start, stop and direction commands. 10 = COMM – Assigns the fieldbus Command Word as the source for the start/stop and direction commands. • Bits 0,1, 2 of Command Word 1 (parameter 0301) activates the start/stop and direction commands. • See the fieldbus user’s manual for detailed instructions.	**0…14**
1003	**DIRECTION** Defines the control of the motor rotation direction. 1 = FORWARD – Rotation is fixed in the forward direction. 2 = REVERSE – Rotation is fixed in the reverse direction. 3 = REQUEST – Rotation direction can be changed on command.	**1…3**

Reference signal source selection

Code	Setting for fieldbus control & description	Range
1102	**EXT1/EXT2 SEL** Defines the source for selecting between the two external control locations EXT1 or EXT2. Thus, defines the source for Start/Stop/Direction commands and reference signals. 8 = COMM – Assigns control of the drive via external control location EXT1 or EXT2 based on the fieldbus control word. • Bit 5 of Command Word 1 (parameter 0301) defines the active external control location (EXT1 or EXT2). • See the fieldbus user's manual for detailed instructions.	**-6…12**
1103	**REF1 SELECT** Selects the signal source for external reference REF1. 8 = COMM – Defines the fieldbus as the reference source. 9 = COMM+AI1 – Defines a fieldbus and analogue input 1 (AI1) combination as the reference source. See *Analogue input reference correction* on page *180*. 10 = COMM*AI1 – Defines a fieldbus and analogue input 1 (AI1) combination as the reference source. See *Analogue input reference correction* on page *180*.	**0…17**
1106	**REF2 SELECT** Selects the signal source for external reference REF2. 8 = COMM – Defines the fieldbus as the reference source. 9 = COMM+AI1 – Defines a fieldbus and analogue input 1 (AI1) combination as the reference source. See *Analogue input reference correction* on page *180*. 10 = COMM*AI1 – Defines a fieldbus and analogue input 1 (AI1) combination as the reference source. See *Analogue input reference correction* on page *180*.	**0…19**

Digital output signal source selection

Code	Setting for fieldbus control & description	Range
1401	**RELAY OUTPUT 1**	**0…47**

Defines the event or condition that activates relay 1 – what relay output 1 means.

35 = COMM – Energize the relay based on the input from the fieldbus communication.
- Fieldbus writes a binary code in parameter 0134 that energizes relay 1…relay 6 according to the table below.
- 0 = De-energize the relay, 1 = Energize the relay.

Par. 0134	Binary	RO6	RO5	RO4	RO3	RO2	RO1
0	000000	0	0	0	0	0	0
1	000001	0	0	0	0	0	1
2	000010	0	0	0	0	1	0
3	000011	0	0	0	0	1	1
4	000100	0	0	0	1	0	0
5…62	…	…	…	…	…	…	…
63	111111	1	1	1	1	1	1

36 = COMM(-1) – Energize the relay based on the input from the fieldbus communication.
- Fieldbus writes a binary code in parameter 0134 that energizes relay 1…relay 6 according to the table below.
- 0 = De-energize the relay, 1 = Energize the relay.

Par. 0134	Binary	RO6	RO5	RO4	RO3	RO2	RO1
0	000000	1	1	1	1	1	1
1	000001	1	1	1	1	1	0
2	000010	1	1	1	1	0	1
3	000011	1	1	1	1	0	0
4	000100	1	1	1	0	1	1
5…62	…	…	…	…	…	…	…
63	111111	0	0	0	0	0	0

1402	**RELAY OUTPUT 2**	**0…47**

Defines the event or condition that activates relay 2 – what relay output 2 means.
- See 1401 RELAY OUTPUT 1.

1403	**RELAY OUTPUT 3**	**0…47**

Defines the event or condition that activates relay 3 – what relay output 3 means.
- See 1401 RELAY OUTPUT 1.

Code	Setting for fieldbus control & description	Range
1410 … 1412	**RELAY OUTPUT 4…6** Defines the event or condition that activates relay 4…6 – what relay outputs 4…6 means. • See 1401 RELAY OUTPUT 1.	**0…47**

Analogue output signal source selection

Code	Setting for fieldbus control & description	Range
1501	**AO1 CONTENT SEL** Defines the content for analogue output AO1. 135 = COMM VALUE 1 – Energize output based on the input from fieldbus communication (parameter 0135). 136 = COMM VALUE 2 – Energize output based on the input from fieldbus communication (parameter 0136).	**99…159**
1502	**AO1 CONTENT MIN** Sets the minimum content value. • Content is the parameter selected by parameter 1501. • Minimum value refers to the minimum content value that will be converted to an analogue output. • These parameters (content and current min. and max. settings) provide scale and offset adjustment for the output. See the figure. 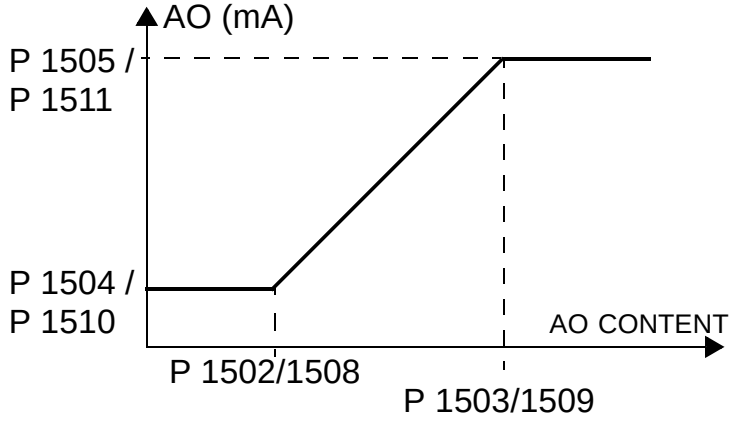 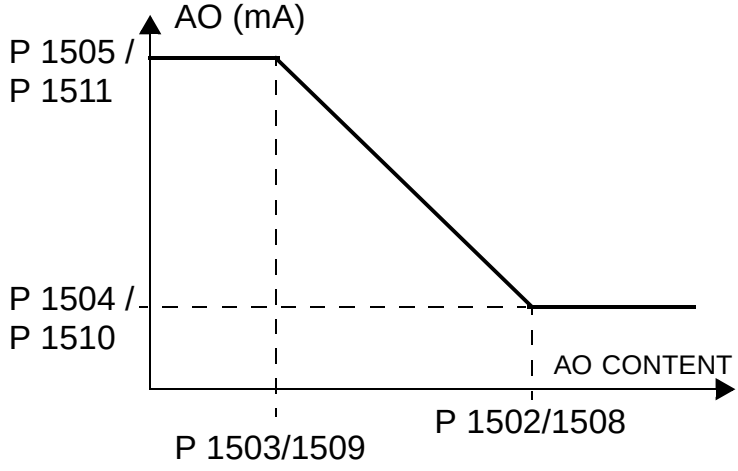 	**-**
1503	**AO1 CONTENT MAX** Sets the maximum content value • Content is the parameter selected by parameter 1501. • Maximum value refers to the maximum content value that will be converted to an analogue output.	**-**
1504	**MINIMUM AO1** Sets the minimum output current.	**0.0…20.0 mA**

Code	Setting for fieldbus control & description	Range
1505	**MAXIMUM AO1** Sets the maximum output current.	**0.0…20.0 mA**
1506	**FILTER AO1** Defines the filter time constant for AO1. • The filtered signal reaches 63% of a step change within the time specified. • See the figure for parameter 1303 in chapter *Parameter listing and descriptions*.	**0.0…10.0 s**
1507	**AO2 CONTENT SEL** Defines the content for analogue output AO2. See AO1 CONTENT SEL above.	**99…159**
1508	**AO2 CONTENT MIN** Sets the minimum content value. See AO1CONTENT MIN above.	**-**
1509	**AO2 CONTENT MAX** Sets the maximum content value. See AO1 CONTENT MAX above.	**-**
1510	**MINIMUM AO2** Sets the minimum output current. See MINIMUM AO1 above.	**0…20.0 mA**
1511	**MAXIMUM AO2** Sets the maximum output current. See MAXIMUM AO1 above.	**0…20.0 mA**
1512	**FILTER AO2** Defines the filter time constant for AO2. See FILTER AO1 above.	**0…10.0 s**

System control inputs

Code	Setting for fieldbus control & description	Range
1601	**RUN ENABLE** Selects the source of the Run enable signal. See the figure on page *202*. 7 = COMM – Assigns the fieldbus Command Word as the source for the Run enable signal. • Bit 6 of Command Word 1 (parameter 0301) activates the Run disable signal. • See the fieldbus user's manual for detailed instructions. **Note:** Hardware is bypassed if a command is the source of the Run enable signal.	**-6…7**
1604	**FAULT RESET SEL** Selects the source for the fault reset signal. The signal resets the drive after a fault trip if the cause of the fault no longer exists. 8 = COMM – Defines the fieldbus as a fault reset source. • The Command Word is supplied through fieldbus communication. • The bit 4 of Command Word 1 (parameter 0301) resets the drive.	**-6…8**

Code	Setting for fieldbus control & description	Range
1606	**LOCAL LOCK** Defines control for the use of the HAND mode. The HAND mode allows drive control from the control panel (operator keypad). • When LOCAL LOCK is active, the control panel cannot change to HAND mode. 8 = COMM – Defines bit 14 of Command Word 1 (parameter 0301) as the control for setting the local lock. • The Command Word is supplied through fieldbus communication.	**-6…8**
1607	**PARAM SAVE** Saves all altered parameters to the permanent memory. • Parameters altered through a fieldbus are not automatically saved to the permanent memory. To save, you must use this parameter. • If 1602 PARAMETER LOCK = 2 (NOT SAVED), parameters altered from the control panel (operator keypad) are not saved. To save, you must use this parameter. • If 1602 PARAMETER LOCK = 1 (OPEN), parameters altered from the control panel are stored immediately to permanent memory. 0 = DONE – The value changes automatically when all parameters are saved. 1 = SAVE… – Saves altered parameters to the permanent memory.	**0=DONE, 1=SAVE**
1608	**START ENABLE 1** Selects the source of the Start enable 1 signal. See the figure on page *202*. **Note:** Start enable functionality **differs** from the Run enable functionality. 7 = COMM – Assigns the fieldbus Command Word as the source for the Start enable 1 signal. • Bit 2 of Command Word 2 (parameter 0302) activates the Start disable 1 signal. • See the fieldbus user's manual for detailed instructions.	**-6…7**
1609	**START ENABLE 2** Selects the source of the Start enable 2 signal. **Note:** Start enable functionality **differs** from the Run enable functionality. 7 = COMM – Assigns the fieldbus Command Word as the source for the Start enable 2 signal. • Bit 3 of Command Word 2 (parameter 0302) activates the Start disable 2 signal. • See the fieldbus user's manual for detailed instructions.	**-6…7**

Acceleration/deceleration ramp pair selection

Code	Description	Range
2201	**ACC/DEC 1/2 SEL** Defines control for selection of acceleration/deceleration ramps. • Ramps are defined in pairs, with one ramp for acceleration and one ramp for deceleration. 7 = COMM – Defines bit 10 of Command Word 1 (parameter 0301) as the control for ramp pair selection. •The command word is supplied through fieldbus communication.	**-6…6**
2209	**RAMP INPUT 0** Defines control for forcing the ramp input to 0. 7 = COMM – Defines bit 13 of the Command Word 1 (parameter 0301) as the control for forcing the ramp input to 0. •The command word is supplied through fieldbus communication.	**-6…7**

Communication fault functions

Code	Description	Range
3018	**COMM FAULT FUNC** Defines the drive response if the fieldbus communication is lost. 0 = NOT SEL – No response 1 = FAULT – Displays a fault (28, SERIAL 1 ERR) and the drive coasts to stop. 2 = CONST SP 7 – Displays an alarm (2005, IO COMM) and sets the speed using 1208 CONST SPEED 7. This “alarm speed” remains active until the fieldbus writes a new reference value. 3 = LAST SPEED – Displays an alarm (2005, IO COMM) and sets the speed using the last operating level. This value is the average speed over the last 10 seconds. This “alarm speed” remains active until the fieldbus writes a new reference value. ⚠ **WARNING!** If you select CONST SP 7, or LAST SPEED, make sure that continued operation is safe when the fieldbus communication is lost.	**0…3**
3019	**COMM FAULT TIME** Sets the communication fault time used with 3018 COMM FAULT FUNC. • Brief interruptions in the fieldbus communication are not treated as faults if they are less than the COMM FAULT TIME value.	**0…60.0 s**

PID control feedback source selection

Code	Description	Range
4010	**SET POINT SEL**	**0…19**

Defines the reference signal source for the PID controller.
- Parameter has no significance when the PID regulator is by-passed (see 8121 REG BYPASS CTRL).

8 = COMM – Fieldbus provides reference.
9 = COMM+AI1 – Defines a fieldbus and analogue input 1 (AI1) combination as the reference source. See *Analogue input reference correction* on page *150*.
10 = COMM*AI1 – Defines a fieldbus and analogue input 1 (AI1) combination as the reference source. See *Analogue input reference correction* on page *150*.

Analogue input reference correction

Parameter values 9, 10, and 14…17 use the formula in the following table.

Value setting	Calculation of the AI reference
C + B	C value + (B value - 50% of reference value)
C * B	C value · (B value / 50% of reference value)
C - B	(C value + 50% of reference value) - B value
C / B	(C value · 50% of reference value) / B value

Where:
- C = Main reference value (= COMM for values 9, 10 and = AI1 for values 14…17)
- B = Correcting reference (= AI1 for values 9, 10 and = AI2 for values 14…17).

Example: The figure shows the reference source curves for value settings 9, 10, and 14…17, where**:**
- C = 25%.
- P 4012 SETPOINT MIN = 0.
- P 4013 SETPOINT MAX = 0.
- B varies along the horizontal axis.

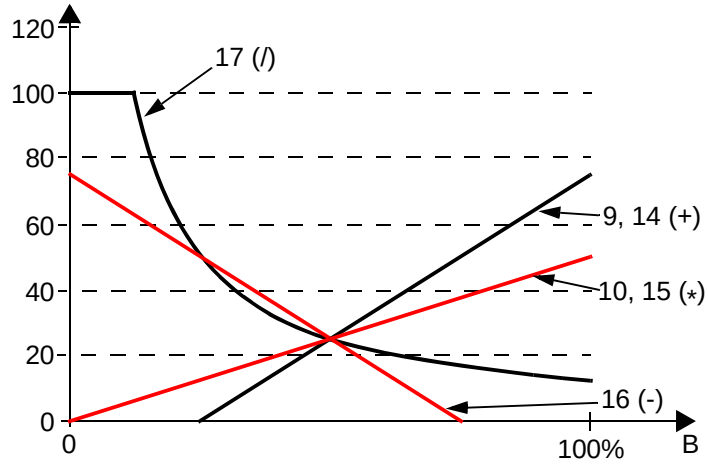

4014	**FBK SEL**	**1…13**

Defines the PID controller feedback (actual signal).
11 = COMM FBK 1 – Signal 0158 PID COMM VALUE 1 provides the feedback signal.
12 = COMM FBK 2 – Signal 0159 PID COMM VALUE 2 provides the feedback signal.

Code	Description	Range
4016	**ACT1 INPUT** Defines the source for actual value 1 (ACT1). 6 = COMM ACT 1 – Uses value of signal 0158 PID COMM VALUE 1 for ACT1. Value is not scaled. 7 = COMM ACT 2 – Uses value of signal 0159 PID COMM VALUE 2 for ACT1. Value is not scaled.	**1…7**
4017	**ACT2 INPUT** Defines the source for actual value 2 (ACT2). 6 = COMM ACT 1 – Uses value of signal 0158 PID COMM VALUE 1 for ACT2. Value is not scaled. 7 = COMM ACT 2 – Uses value of signal 0159 PID COMM VALUE 2 for ACT2. Value is not scaled.	**1…7**

Code	Description	Range
4110, 4114, 4116, 4117	These parameters belong to PID parameter set 2. The operation is analogous with set 1 parameters 4010, 4014, 4016 and 4017.	

Fault handling

The ACH550 indicates all faults in clear text and fault number in the control panel display. Refer to chapter *Diagnostics and maintenance*. Additionally, a fault code is allocated to each fault name shown in parameters 0401, 0412 and 0413. The fieldbus-specific fault code is indicated as a hexadecimal value coded according to the DRIVECOM specification. Note that not all fieldbuses support the fault code indication. The table below defines the fault codes for each fault name.

Fault name in control panel	Drive fault code	Fieldbus fault code
OVERCURRENT	1	2310h
DC OVERVOLT	2	3210h
DEV OVERTEMP	3	4210h
SHORT CIRC	4	2340h
DC UNDERVOLT	6	3220h
AI1 LOSS	7	8110h
AI2 LOSS	8	8110h
MOT OVERTEMP	9	4310h
PANEL LOSS	10	5300h
ID RUN FAIL	11	FF84h
MOTOR STALL	12	7121h
EXT FAULT 1	14	9000h
EXT FAULT 2	15	9001h
EARTH FAULT	16	2330h
Obsolete	17	FF6Ah
THERM FAIL	18	5210h
OPEX LINK	19	7500h
OPEX PWR	20	5414h
CURR MEAS	21	2211h
SUPPLY PHASE	22	3130h
OVERSPEED	24	7310h
DRIVE ID	26	5400h
CONFIG FILE	27	630Fh
SERIAL 1 ERR	28	7510h
EFB CON FILE	29	6306h

FORCE TRIP	30	FF90h
EFB 1	31	FF92h
EFB 2	32	FF93h
EFB 3	33	FF94h
MOTOR PHASE	34	FF56h
OUTP WIRING	35	FF95h
INCOMPATIBLE SW	36	630Fh
CB OVERTEMP	37	4110h
USER LOAD CURVE	38	FF6Bh
SERF CORRUPT	101	FF55h
SERF MACRO	103	FF55h
DSP T1 OVERLOAD	201	6100h
DSP T2 OVERLOAD	202	6100h
DSP T3 OVERLOAD	203	6100h
DSP STACK ERROR	204	6100h
CB ID ERROR	206	5000h
EFB LOAD ERROR	207	6100h
PAR HZRPM	1000	6320h
PAR PFA REF NEG	1001	6320h
PAR AI SCALE	1003	6320h
PAR AO SCALE	1004	6320h
PAR PCU 2	1005	6320h
PAR EXT RO	1006	6320h
PAR FIELDBUS MISSING	1007	6320h
PAR PFA MODE	1008	6320h
PAR PCU 1	1009	6320h
PAR PFA & OVERRIDE	1010	6320h
PAR OVERRIDE	1011	6320h
PAR PFA IO 1	1012	6320h
PAR PFA IO 2	1013	6320h
PAR PFA IO 3	1014	6320h
Not used	1015	6320h
PAR USER LOAD C	1016	6320h

Parameter listing and descriptions

What this chapter contains

This chapter contains the parameter listing of predefined application macros and descriptions of individual parameters for the ACH550.

Parameter groups

The parameters are grouped as follows:

- *Group 99: START-UP DATA* – Defines the data required to set up the drive and enter motor information.
- *Group 01: OPERATING DATA* – Contains the operating data including actual signals.
- *Group 03: FB ACTUAL SIGNALS* – Monitors fieldbus communications.
- *Group 04: FAULT HISTORY* – Stores a recent fault history reported by the drive.
- *Group 10: START/STOP/DIR* – Defines external sources for commands that enable start, stop and direction changes. Locks direction or enables direction control.
- *Group 11: REFERENCE SELECT* – Defines how the drive selects between command sources.
- *Group 12: CONSTANT SPEEDS* – Defines a set of constant speeds.
- *Group 13: ANALOGUE INPUTS* – Defines the limits and filtering for analogue inputs.
- *Group 14: RELAY OUTPUTS* – Defines the conditions which activate relay outputs.
- *Group 15: ANALOGUE OUTPUTS* – Defines the drive's analogue outputs.
- *Group 16: SYSTEM CONTROLS* – Defines system level locks, resets and enables.
- *Group 17: OVERRIDE* – Defines override enabling/disabling, override activation signal, override speed/frequency and pass code.

- *Group 20: LIMITS* – Defines minimum and maximum limits for driving the motor.
- *Group 21: START/STOP* – Defines how the motor starts and stops.
- *Group 22: ACCEL/DECEL* – Defines ramps which control the rate of acceleration and deceleration.
- *Group 23: SPEED CONTROL* – Defines variables for speed control.
- *Group 25: CRITICAL SPEEDS* – Defines critical speeds or speed ranges.
- *Group 26: MOTOR CONTROL* – Defines motor control variables.
- *Group 29: MAINTENANCE TRIG* – Defines usage levels and trigger points.
- *Group 30: FAULT FUNCTIONS* – Defines faults and responses.
- *Group 31: AUTOMATIC RESET* – Defines conditions for automatic resets.
- *Group 32: SUPERVISION* – Defines supervision for signals.
- *Group 33: INFORMATION* – Contains software information.
- *Group 34: PANEL DISPLAY* – Defines the content for control panel display.
- *Group 35: MOTOR TEMP MEAS* – Defines motor overheating detection and reporting.
- *Group 36: TIMED FUNCTIONS* – Defines timed functions.
- *Group 37: USER LOAD CURVE* – Defines user adjustable load curves.
- *Group 40: PROCESS PID SET 1* – Defines a process PID control operation mode for the drive.
- *Group 41: PROCESS PID SET 2* – Defines a process PID control operation mode for the drive.
- *Group 42: EXT / TRIM PID* – Defines parameters for External PID.
- *Group 51: EXT COMM MODULE* – Defines set-up variables for external fieldbus communication module (FBA).
- *Group 52: PANEL COMM* – Defines set-up variables for panel communication.
- *Group 53: EFB PROTOCOL* – Defines set-up variables for embedded fieldbus communication protocol.

- *Group 81: PFA CONTROL* – Defines pump and fan alternation mode of operation.
- *Group 98: OPTIONS* – Configures options for drive.

Group 99: START-UP DATA

This group defines special start-up data required to:

- set up the drive
- enter motor information.

Code	Description	Range
9901	**LANGUAGE** Selects the display language. 0 = ENGLISH 1 = ENGLISH (AM) 2 = DEUTSCH 3 = ITALIANO 4 = ESPAÑOL 5 = PORTUGUES 6 = NEDERLANDS 7 = FRANCAIS 8 = DANSK 9 = SUOMI 10 = SVENSKA 11 = RUSSKI 12 = POLSKI 13 = TÜRKÇE 14 = CZECH 15 = MAGYAR	**0…16**
9902	**APPLIC MACRO** Selects an application macro, or loads or saves a parameter set. Application macros automatically edit parameters to configure the ACH550 for a particular application. 1 = HVAC DEFAULT 2 = SUPPLY FAN 3 = RETURN FAN 4 = COOLING TOWER FAN 5 = CONDENSER 6 = BOOSTER PUMP 7 = PUMP ALTERNATION 8 = INTERNAL TIMER 9 = INTERNAL TIMER WITH CONSTANT SPEEDS 10 = FLOATING POINT 11 = DUAL SETPOINT PID 12 = DUAL SETPOINT PID WITH CONSTANT SPEEDS 13 = E-BYPASS 14 = HAND CONTROL 31 = LOAD FD SET 0 = USER S1 LOAD -1 = USER S1 SAVE -2 = USER S2 LOAD -3 = USER S2 SAVE -4 = OR SET LOAD 1…14 – Selects an application macro. 31 = LOAD FD SET – Activates FlashDrop parameter values as defined by the downloaded FlashDrop file. Parameter view is selected by parameter 1611 PARAMETER VIEW. • FlashDrop is an optional device for fast copying of parameters to unpowered drives. The FlashDrop allows easy customizing of the parameter list, e.g. selected parameters can be hidden. For more information, see *MFDT-01 FlashDrop User's Manual* [3AFE68591074 (English)]. -1 = USER S1 SAVE, -3 = USER S2 SAVE – Saves a user parameter set into the drive permanent memory for later use. • Each set contains parameter settings, including *Group 99: START-UP DATA*, and the results of the motor identification run. 0 = USER S1 LOAD, -2 = USER S2 LOAD – Takes a user parameter set back in use. -4 = OR SET LOAD – Loads the override parameter set manually. • The automatic saving and loading of the override parameter set is defined by *Group 17: OVERRIDE*.	**1…14, 0…-4**

Code	Description	Range
9904	**MOTOR CTRL MODE** Selects the motor control mode. 1 = VECTOR:SPEED – sensorless vector control mode • Reference 1 is speed reference in rpm. • Reference 2 is speed reference in % (100% is absolute maximum speed, equal to the value of parameter 2002 MAXIMUM SPEED, or 2001 MINIMUM SPEED if the absolute value of the minimum speed is greater than the maximum speed). 3 = SCALAR:FREQ – scalar control mode • Reference 1 is frequency reference in Hz. • Reference 2 is frequency reference in % (100% is absolute maximum frequency, equal to the value of parameter 2008 MAXIMUM FREQ, or 2007 MINIMUM FREQ if the absolute value of the minimum speed is greater than the maximum speed).	**1=VECTOR:SPEED,** **3=SCALAR:FREQ**
9905	**MOTOR NOM VOLT** Defines the nominal motor voltage. • Must equal the value on the motor rating plate. • Sets the maximum drive output voltage supplied to the motor. • The ACH550 cannot supply the motor with a voltage greater than the mains voltage. 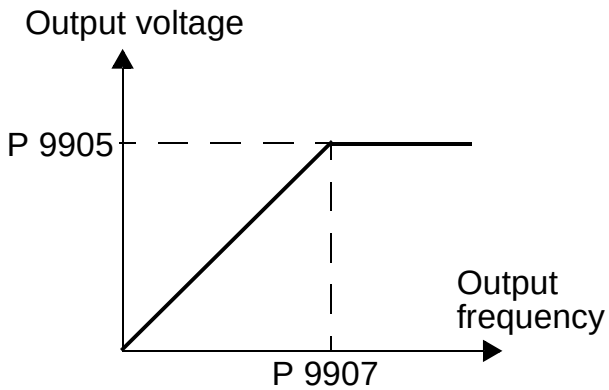 	**200…600 V,** **US: 230…690 V**
9906	**MOTOR NOM CURR** Defines the nominal motor current. • Must equal the value on the motor rating plate. • Range allowed: (0.2…2.0) · I_N (where I_N is drive current).	**type dependent**
9907	**MOTOR NOM FREQ** Defines the nominal motor frequency. • Range: 10…500 Hz (typically 50 or 60 Hz) • Sets the frequency at which output voltage equals the MOTOR NOM VOLT. • Field weakening point = Nom freq · Supply Volt / Mot Nom Volt	**10.0…500 Hz**

Code	Description	Range
9908	**MOTOR NOM SPEED** Defines the nominal motor speed. • Must equal the value on the motor rating plate.	**50…30000 rpm**
9909	**MOTOR NOM POWER** Defines the nominal motor power. • Must equal the value on the motor rating plate.	**type dependent**
9910	**ID RUN** This parameter controls a self-calibration process called the Motor Id Run. During this process, the drive operates the motor in order to identify its characteristics, and then optimizes control by creating a motor model. This motor model is especially effective when: • Operation point is near zero speed. • Operation requires a torque range above the motor nominal torque, over a wide speed range, and without any measured speed feedback (i.e. without a pulse encoder). If no Motor Id Run is performed, the drive uses a less detailed motor model created when the drive is first run. This “First Start” id magnetization model is updated automatically* after any motor parameter is changed. To update the model, the drive magnetizes the motor for 10 to 15 seconds at zero speed. * Creating the “First Start” model does require that either 9904 = 1 (VECTOR:SPEED), or 9904 = 3 (SCALAR:FREQ) and 2101 = 3 (SCALAR FLYST) or 5 (FLY + BOOST). **Note:** Motor models work with internal parameters and user-defined motor parameters. In creating a model the drive does not change any user-defined parameters. 0 = OFF/IDMAGN – Disables the Motor Id Run creation process. (Does not disable the operation of a motor model.) 1 = ON – Enables a Motor Id Run at the next start command. After run completion, this value automatically changes to 0.	**0=OFF/IDMAGN, 1=STANDARD**

Code	Description	Range
	To perform a Motor Id Run: 1. De-couple load from motor (or otherwise reduce load to near zero). 2. Verify that motor operation is safe: • The run automatically operates the motor in the forward direction – confirm that forward rotation is safe. • The run automatically operates the motor at 50…80% of nominal speed – confirm that operation at these speeds is safe. 3. Check following parameters (if changed from factory settings): • 2001 MINIMUM SPEED ≤ 0 • 2002 MAXIMUM SPEED > 80% of motor rated speed. • 2003 MAX CURRENT ≥ 100% of I_{2N} value • The maximum torque (parameters 2014, 2017 and/or 2018) > 50%. 4. On the control panel, select: • Select PARAMETERS. • Select group 99. • Select parameter 9910.	

Group 01: OPERATING DATA

This group contains drive operating data, including actual signals. The drive sets the values for actual signals, based on measurements or calculations. You cannot set these values.

Code	Description	Range
0101	**SPEED & DIR** Calculated signed speed of the motor (rpm). The absolute value of 0101 SPEED & DIR is the same as the value of 0102 speed. • The value of 0101 SPEED & DIR is positive if the motor runs in the forward direction. • The value of 0101 SPEED & DIR is negative if the motor runs in the reverse direction.	**-30000…30000 rpm**
0102	**SPEED** Calculated speed of the motor (rpm)	**0…30000 rpm**
0103	**OUTPUT FREQ** Frequency (Hz) applied to the motor. (Also shown by default in the OUTPUT display.)	**0.0…500.0 Hz**
0104	**CURRENT** Motor current, as measured by the ACH550. (Also shown by default in the OUTPUT display.)	**type dependent**
0105	**TORQUE** Output torque. Calculated value of torque on motor shaft in % of the motor nominal torque.	**-200…200%**
0106	**POWER** Measured motor power in kW	**type dependent**
0107	**DC BUS VOLTAGE** DC bus voltage in V DC, as measured by the ACH550	**0…2.5 · V_{dN}**
0109	**OUTPUT VOLTAGE** Voltage applied to the motor	**0…2.0 · V_{dN}**
0110	**DRIVE TEMP** Temperature of the drive heatsink in Celsius	**0…150 °C**
0111	**EXTERNAL REF 1** External reference, REF1, in rpm or Hz – units determined by parameter 9904	**0…300000 rpm/** **0…500 Hz**

Code	Description	Range
0112	**EXTERNAL REF 2** External reference, REF2, in %	**0…100%** **(0…600% for torque)**
0113	**CTRL LOCATION** Active control location. Alternatives are: 0 = HAND 1 = EXT1 2 = EXT2	**0=HAND, 1=EXT1, 2=EXT2**
0114	**RUN TIME (R)** Drive's accumulated running time in hours (h) • Can be **reset** by pressing the UP and DOWN keys simultaneously when in the Parameters mode.	**0…9999 h**
0115	**KWH COUNTER (R)** Drive's accumulated power consumption in kilowatt hours • Can be **reset** by pressing the UP and DOWN keys simultaneously when in the Parameters mode.	**0…9999 kWh**
0116	**APPL BLK OUTPUT** Application block output signal. Value is from either: • PFA control, if PFA Control is active, or • parameter 0112 EXTERNAL REF 2.	**0…100%** **(0…600% for torque)**
0118	**DI 1-3 STATUS** Status of the three digital inputs • Status is displayed as a binary number. • 1 indicates that the input is activated. • 0 indicates that the input is deactivated. 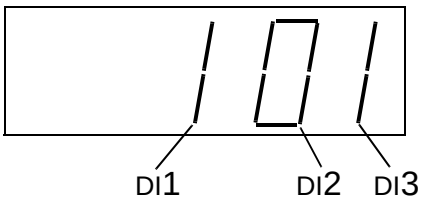 	**000…111 (0…7 decimal)**
0119	**DI 4-6 STATUS** Status of the three digital inputs • See parameter 0118 DI 1-3 STATUS.	**000…111 (0…7 decimal)**
0120	**AI 1** Relative value of analogue input 1 in %	**0…100%**
0121	**AI 2** Relative value of analogue input 2 in %	**0…100%**

Code	Description	Range
0122	**RO 1-3 STATUS** Status of the three relay outputs • 1 indicates that the relay is energized. • 0 indicates that the relay is de-energized. 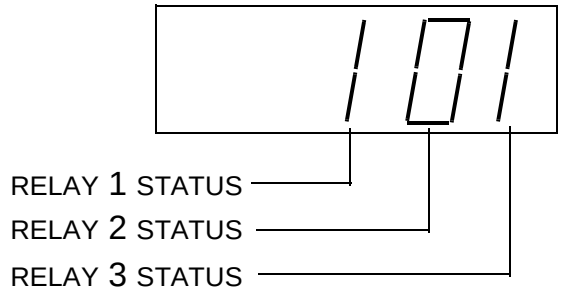 	**0…111 (0…7 decimal)**
0123	**RO 4-6 STATUS** Status of the three relay outputs. See parameter 0122.	**0…111 (0…7 decimal)**
0124	**AO 1** Analogue output 1 value in milliamperes	**0…20 mA**
0125	**AO 2** Analogue output 2 value in milliamperes	**0…20 mA**
0126	**PID 1 OUTPUT** Process PID (PID1) controller output value in %	**-1000…1000%**
0127	**PID 2 OUTPUT** External PID (PID2) controller output value in %	**-100…100%**
0128	**PID 1 SETPNT** PID1 controller setpoint signal • Units and scale defined by PID parameters	**unit and scale defined by par. 4006/4106 and 4007/4107**
0129	**PID 2 SETPNT** PID2 controller setpoint signal • Units and scale defined by PID parameters	**unit and scale defined by par. 4206 and 4207**
0130	**PID 1 FBK** PID1 controller feedback signal • Units and scale defined by PID parameters	**unit and scale defined by par. 4006/4106 and 4007/4107**
0131	**PID 2 FBK** PID2 controller feedback signal • Units and scale defined by PID parameters	**unit and scale defined par. 4206 and 4207**

Code	Description	Range
0132	**PID 1 DEVIATION** Difference between the PID1 controller reference value and actual value • Units and scale defined by PID parameters	**unit and scale defined by par. 4006/4106 and 4007/4107**
0133	**PID 2 DEVIATION** Difference between the PID2 controller reference value and actual value • Units and scale defined by PID parameters	**unit and scale defined by par. 4206 and 4207**
0134	**COMM RO WORD** Free data location that can be written from the serial link • Used for relay output control • See parameter 1401.	**0…65535**
0135	**COMM VALUE 1** Free data location that can be written from the serial link	**-32768…+32767**
0136	**COMM VALUE 2** Free data location that can be written from the serial link	**-32768…+32767**
0137	**PROCESS VAR 1** Process variable 1 • Defined by parameters in *Group 34: PANEL DISPLAY*	**-**
0138	**PROCESS VAR 2** Process variable 2 • Defined by parameters in *Group 34: PANEL DISPLAY*	**-**
0139	**PROCESS VAR 3** Process variable 3 • Defined by parameters in *Group 34: PANEL DISPLAY*	**-**
0140	**RUN TIME** Drive's accumulated running time in thousands of hours (kh). • Cannot be reset.	**0.00…499.99 kh**
0141	**MWH COUNTER** Drive's accumulated power consumption in megawatt hours. • Cannot be reset.	**0…9999 MWh**
0142	**REVOLUTION CNTR** Motor's accumulated revolutions in millions of revolutions. • Can be reset by pressing the UP and DOWN keys simultaneously when in the Parameters mode.	**0…65535 Mrev**

Code	Description	Range
0143	**DRIVE ON TIME HI** Drive's accumulated power on-time in days. • Cannot be reset.	**0…65535 days**
0144	**DRIVE ON TIME LO** Drive's accumulated power on-time in 2 second ticks (30 ticks = 60 seconds). • Shown in format hh.mm.ss. • Cannot be reset.	**00.00.00…23:59:58**
0145	**MOTOR TEMP** Motor temperature in degrees Celsius / PTC resistance in ohms. • Applies only if motor temperature sensor is set up. See parameter 3501.	**-10…200 °C / 0…5000 ohm**
0150	**CB TEMP** Temperature of the drive control board in degrees Celsius. **Note:** Some drives have a control board (OMIO) that does not support this feature. These drives always show the constant value of 25.0 °C.	**-20.0…150.0 °C**
0151	**INPUT KWH (R)** Calculated actual intake energy in kWh.	**0.0…999.9 kWh**
0152	**INPUT MWH** Calculated actual intake energy in MWh.	**0…9999 MWh**
0158	**PID COMM VALUE 1** Data received from fieldbus for PID control (PID1 and PID2)**.**	**-32768…+32767**
0159	**PID COMM VALUE 2** Data received from fieldbus for PID control (PID1 and PID2)**.**	**-32768…+32767**

Group 03: FB ACTUAL SIGNALS

This group monitors fieldbus communications. See also chapter *Serial communications*.

Code	Description	Range
0301	**FB CMD WORD 1** Read-only copy of the Fieldbus Command Word 1 • The fieldbus command is the principal means for controlling the drive from a fieldbus controller. The command consists of two Command Words. Bit-coded instructions in the Command Words switch the drive between states. • To control the drive using the Command Words, an external location (EXT1 or EXT2) must be active and set to COMM. (See parameters 1001 and 1002.) • The control panel displays the word in hex. For example, all zeros and a 1 in Bit 0 display 0001. All zeros and a 1 in Bit 15 display 8000.	-

Bit #	0301, FB CMD WORD 1	0302, FB CMD WORD 2
0	STOP	FBLOCAL_CTL
1	START	FBLOCAL_REF
2	REVERSE	START_DISABLE1
3	LOCAL	START_DISABLE2
4	RESET	Reserved
5	EXT2	Reserved
6	RUN_DISABLE	Reserved
7	STPMODE_R	Reserved
8	STPMODE_EM	Reserved
9	STPMODE_C	Reserved
10	RAMP_2	Reserved
11	RAMP_OUT_0	REF_CONST
12	RAMP_HOLD	REF_AVE
13	RAMP_IN_0	LINK_ON
14	RREQ_LOCALLOC	REQ_STARTINH
15	TORQLIM2	OFF_INTERLOCK

0302	**FB CMD WORD 2** Read-only copy of the Fieldbus Command Word 2 • See parameter 0301.	-

Code	Description	Range
0303	**FB STS WORD 1** Read-only copy of the Status Word 1 • The drive sends status information to the fieldbus controller. The status consists of two Status Words.	-

Bit #	0303, FB STS WORD 1	0304, FB STS WORD 2
0	READY	ALARM
1	ENABLED	NOTICE
2	STARTED	DIRLOCK
3	RUNNING	LOCALLOCK
4	ZERO_SPEED	CTL_MODE
5	ACCELERATE	Reserved
6	DECELERATE	Reserved
7	AT_SETPOINT	CPY_CTL
8	LIMIT	CPY_REF1
9	SUPERVISION	CPY_REF2
10	REV_REF	REQ_CTL
11	REV_ACT	REQ_REF1
12	PANEL_LOCAL	REQ_REF2
13	FIELDBUS_LOCAL	REQ_REF2EXT
14	EXT2_ACT	ACK_STARTINH
15	FAULT	ACK_OFF_ILCK

0304	**FB STS WORD 2** Read-only copy of the Status Word 2 • See parameter 0303.	-

Code	Description	Range
0305	**FAULT WORD 1** Read-only copy of the Fault Word 1 • When a fault is active, the corresponding bit for the active fault is set in the Fault Words. • Each fault has a dedicated bit allocated within Fault Words. • See *Fault listing* on page *353* for a description of the faults. • The control panel displays the word in hex. For example, all zeros and a 1 in Bit 0 display 0001. All zeros and a 1 in Bit 15 display 8000.	-

Bit #	0305, FAULT WORD 1	0306, FAULT WORD 2	0307, FAULT WORD 3
0	OVERCURRENT	Obsolete	EFB 1
1	DC OVERVOLT	THERM FAIL	EFB 2
2	DEV OVERTEMP	OPEX LINK	EFB 3
3	SHORT CIRC	OPEX PWR	INCOMPATIBLE SW
4	Reserved	CURR MEAS	USER LOAD CURVE
5	DC UNDERVOLT	SUPPLY PHASE	Reserved
6	AI1 LOSS	Reserved	Reserved
7	AI2 LOSS	OVERSPEED	Reserved
8	MOT OVERTEMP	Reserved	Reserved
9	PANEL LOSS	DRIVE ID	Reserved
10	ID RUN FAIL	CONFIG FILE	System error
11	MOTOR STALL	SERIAL 1 ERR	System error
12	CB OVERTEMP	EFB CON FILE	System error
13	EXT FAULT 1	FORCE TRIP	System error
14	EXT FAULT 2	MOTOR PHASE	System error
15	EARTH FAULT	OUTP WIRING	Param. setting fault

0306	**FAULT WORD 2** Read-only copy of the Fault Word 2 • See parameter 0305.	-
0307	**FAULT WORD 3** Read-only copy of the Fault Word 3 • See parameter 0305.	-

Code	Description	Range
0308	**ALARM WORD 1** Read-only copy of the ALARM WORD 1 • When an alarm is active, the corresponding bit for the active alarm is set in the Alarm Words. • Each alarm has a dedicated bit allocated within Alarm Words. • Bits remain set until the whole alarm word is reset. (Reset by writing zero to the word). • The control panel displays the word in hex. For example, all zeros and a 1 in Bit 0 display 0001. All zeros and a 1 in Bit 15 display 8000.	-
0309	**ALARM WORD 2** Read-only copy of the ALARM WORD 2 • See parameter 0308.	-

Bit #	0308, ALARM WORD 1	0309, ALARM WORD 2
0	OVERCURRENT	OFF BUTTON
1	OVERVOLTAGE	PID SLEEP
2	UNDERVOLTAGE	ID RUN
3	DIR LOCK	OVERRIDE
4	IO COMM	START ENABLE 1 MISSING
5	AI1 LOSS	START ENABLE 2 MISSING
6	AI2 LOSS	EMERGENCY STOP
7	PANEL LOSS	Reserved
8	DEVICE OVERTEMP	FIRST START
9	MOTOR TEMP	Reserved
10	Reserved	USER LOAD CURVE
11	MOTOR STALL	START DELAY
12	AUTORESET	Reserved
13	AUTOCHANGE	
14	PFA I LOCK	
15	Reserved	

Group 04: FAULT HISTORY

This group stores a recent history of the faults reported by the drive.

Code	Description	Range
0401	**LAST FAULT** 0 – Clear the fault history (on panel = NO RECORD). n – Fault code of the last recorded fault. • The fault code is displayed as a name. See section *Fault listing* on page *353* for the fault codes and names. The fault name shown for this parameter may be shorter than the corresponding name in the fault listing, which shows the names as they are shown in the fault display.	**fault codes (control panel displays as text)**
0402	**FAULT TIME 1** Day on which the last fault occurred. Either as: • Date if real time clock is operating. • Number of days after power on if real time clock is not used, or was not set.	**date dd.mm.yy/ power-on time in days**
0403	**FAULT TIME 2** Time at which the last fault occurred. Either as: • Real time, in format hh:mm:ss, if real time clock is operating. • The time since power on (less the whole days reported in 0402), in format hh:mm:ss, if real time clock is not used, or was not set.	**time hh.mm.ss**
0404	**SPEED AT FLT** Motor speed (rpm) at the time the last fault occurred	**-**
0405	**FREQ AT FLT** Frequency (Hz) at the time the last fault occurred	**-**
0406	**VOLTAGE AT FLT** DC bus voltage (V) at the time the last fault occurred	**-**
0407	**CURRENT AT FLT** Motor current (A) at the time the last fault occurred	**-**
0408	**TORQUE AT FLT** Motor torque (%) at the time the last fault occurred	**-**
0409	**STATUS AT FLT** Drive status (hex code word) at the time the last fault occurred	**-**
0410	**DI 1-3 AT FLT** Status of digital inputs 1…3 at the time the last fault occurred	**000…111 (binary)**

Code	Description	Range
0411	**DI 4-6 AT FLT** Status of digital inputs 4…6 at the time the last fault occurred	**000…111 (binary)**
0412	**PREVIOUS FAULT 1** Fault code of the second last fault. Read-only.	**as par. 0401**
0413	**PREVIOUS FAULT 2** Fault code of the third last fault. Read-only.	**as par. 0401**

Group 10: START/STOP/DIR

This group:

- defines external sources (EXT1, and EXT2) for commands that enable start, stop and direction changes
- locks direction or enables direction control. To select between the two external locations, use parameter 1102 in the next group.

Code	Description	Range
1001	**EXT1 COMMANDS** Defines external control location 1 (EXT1) – the configuration of start, stop and direction commands. 0 = NOT SEL – No external start, stop and direction command source 1 = DI1 – Two-wire Start/Stop • Start/Stop is through digital input DI1 (DI1 activated = Start; DI1 de-activated = Stop). • Parameter 1003 defines the direction. Selecting 1003 = 3 (REQUEST) is the same as 1003 = 1 (FORWARD). 2 = DI1,2 – Two-wire Start/Stop, Direction • Start/Stop is through digital input DI1 (DI1 activated = Start; DI1 de-activated = Stop). • Direction control [requires parameter 1003 = 3 (REQUEST)] is through digital input DI2 (DI2 activated = Reverse; DI2 de-activated = Forward). 3 = DI1P,2P – Three-wire Start/Stop • Start/Stop commands are through momentary push-buttons (the P stands for “pulse”). • Start is through a normally open push-button connected to digital input DI1. In order to start the drive, the digital input DI2 must be activated prior the pulse in DI1. • Connect multiple Start push-buttons in parallel. • Stop is through a normally closed push-button connected to digital input DI2. • Connect multiple Stop push-buttons in series. • Parameter 1003 defines the direction. Selecting 1003 = 3 (REQUEST) is the same as 1003 = 1 (FORWARD). 4 = DI1P,2P,3 – Three-wire Start/Stop, Direction • Start/Stop commands are through momentary push-buttons, as described for DI1P,2P. • Direction control [requires parameter 1003 = 3 (REQUEST)] is through digital input DI3. (DI3 activated = Reverse; DI3 de-activated = Forward).	**0…14**

Code	Description	Range
	5 = DI1P,2P,3P – Start Forward, Start Reverse, and Stop • Start and Direction commands are given simultaneously with two separate momentary push-buttons (the P stands for “pulse”). • Start Forward command is through a normally open push-button connected to digital input DI1. In order to start the drive, the digital input DI3 must be activated during the pulse in DI1. • Start Reverse command is through a normally open push-button connected to digital input DI2. In order to start the drive, the digital input DI3 must be activated prior the pulse in DI2. • Connect multiple Start push-buttons in parallel. • Stop is through a normally closed push-button connected to digital input DI3. • Connect multiple Stop push-buttons in series. • Requires parameter 1003 = 3 (REQUEST). 6 = DI6 – Two-wire Start/Stop • Start/Stop is through digital input DI6 (DI6 activated = Start; DI6 de-activated = Stop). • Parameter 1003 defines the direction. Selecting 1003 = 3 (REQUEST) is the same as 1003 = 1 (FORWARD). 7 = DI6,5 – Two-wire Start/Stop/Direction • Start/Stop is through digital input DI6 (DI6 activated = Start; DI6 de-activated = Stop). • Direction control [requires parameter 1003 = 3 (REQUEST)] is through digital input DI5. (DI5 activated = Reverse; DI5 de-activated = Forward). 8 = KEYPAD – control panel • Start/Stop and Direction commands are through the control panel when EXT1 is active. • Direction control requires parameter 1003 = 3 (REQUEST). 9 = DI1F,2R – Start/Stop/Direction commands through DI1 and DI2 combinations • Start forward = DI1 activated and DI2 de-activated. • Start reverse = DI1 de-activated and DI2 activated. • Stop = both DI1 and DI2 activated, or both de-activated. • Requires parameter 1003 = 3 (REQUEST). 10 = COMM – Assigns the fieldbus Command Word as the source for the start/stop and direction commands. • Bits 0,1, 2 of Command Word 1 (parameter 0301) activates the start/stop and direction commands. • See the fieldbus user’s manual for detailed instructions. 11 = TIMER 1 – Assigns Start/Stop control to timer 1 (Timer activated = START; Timer de-activated = STOP). • See *Group 36: TIMED FUNCTIONS*. 12…14 = TIMER 2…4 – Assigns Start/Stop control to timer 2…4. • See TIMER 1 above.	

Code	Description	Range
1002	**EXT2 COMMANDS** Defines external control location 2 (EXT2) – the configuration of start, stop and direction commands. • See parameter 1001 EXT1 COMMANDS above.	**0…14**
1003	**DIRECTION** Defines the control of motor rotation direction. 1 = FORWARD – Rotation is fixed in the forward direction. 2 = REVERSE – Rotation is fixed in the reverse direction. 3 = REQUEST – Rotation direction can be changed on command.	**1…3**

Group 11: REFERENCE SELECT

This group defines:

- how the drive selects between command sources
- characteristics and sources for REF1 and REF2.

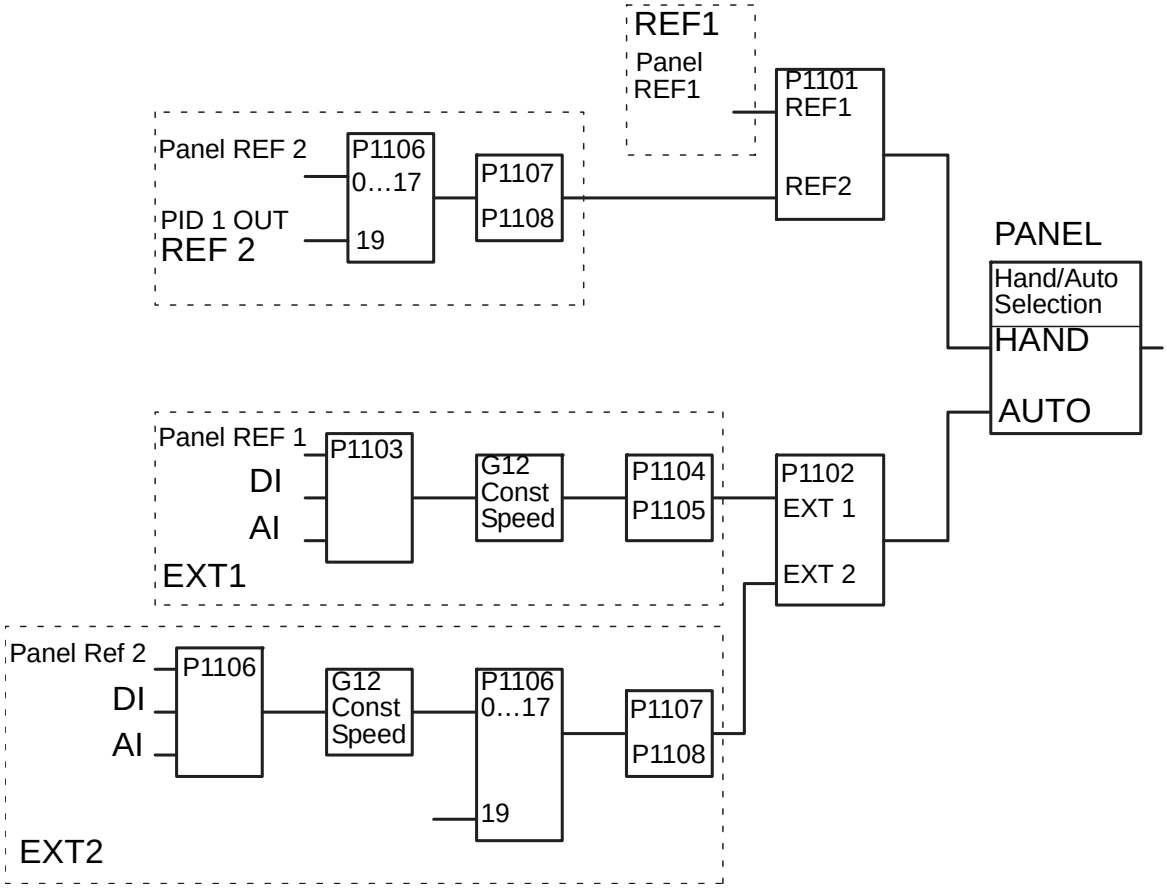

Code	Description	Range
1101	**KEYPAD REF SEL** Selects the reference controlled in local control mode. 1 = REF1(Hz/rpm) – Reference type depends on parameter 9904 MOTOR CTRL MODE: • Speed reference (rpm) if 9904 = 1 (VECTOR:SPEED). • Frequency reference (Hz) if 9904 = 3 (SCALAR:FREQ). 2 = REF2(%)	**1=REF 1(Hz/rpm),** **2=REF 2**

Code	Description	Range
1102	**EXT1/EXT2 SEL** Defines the source for selecting between the two external control locations EXT1 or EXT2. Thus, defines the source for Start/Stop/Direction commands and reference signals. 0 = EXT1 – Selects external control location 1 (EXT1). • See parameter 1001 EXT1 COMMANDS for EXT1's Start/Stop/Dir definitions. • See parameter 1103 REF1 SELECT for EXT1's reference definitions. 1 = DI1 – Assigns control to EXT1 or EXT2 based on the state of DI1 (DI1 activated = EXT2; DI1 de-activated = EXT1). 2…6 = DI2…DI6 – Assigns control to EXT1 or EXT2 based on the state of the selected digital input. • See DI1 above. 7 = EXT2 – Selects external control location 2 (EXT2). • See parameter 1002 EXT2 COMMANDS for EXT2's Start/Stop/Dir definitions. • See parameter 1106 REF2 SELECT for EXT2's reference definitions. 8 = COMM – Assigns control of the drive via external control location EXT1 or EXT2 based on the fieldbus control word. • Bit 5 of Command Word 1 (parameter 0301) defines the active external control location (EXT1 or EXT2). • See the fieldbus user's manual for detailed instructions. 9 = TIMER 1 – Assigns control to EXT1 or EXT2 based on the state of the timer (Timer activated = EXT2; Timer de-activated = EXT1). • See *Group 36: TIMED FUNCTIONS*. 10…12 = TIMER 2…4 – Assigns control to EXT1 or EXT2 based on the state of the timer. • See TIMER 1 above. -1 = DI1(INV) – Assigns control to EXT1 or EXT2 based on the state of DI1 (DI1 activated = EXT1; DI1 de-activated = EXT2). -2…-6 = DI2(INV)…DI6(INV) – Assigns control to EXT1 or EXT2 based on the state of the selected digital input. • See DI1(INV) above.	**-6…12**

8

Code	Description	Range
1103	**REF1 SELECT**	**0…17**

Selects the signal source for external reference REF1.
0 = KEYPAD – Defines the control panel as the reference source.
1 = AI1 – Defines analogue input 1 (AI1) as the reference source.
2 = AI2 – Defines analogue input 2 (AI2) as the reference source.
3 = AI1/JOYST – Defines analogue input 1 (AI1), configured for joystick operation, as the reference source.

- The minimum input signal runs the drive at the maximum reference in the reverse direction. Define the minimum using parameter 1104.
- The maximum input signal runs the drive at maximum reference in the forward direction. Define the maximum using parameter 1105.
- Requires parameter 1003 = 3 (REQUEST).

WARNING! Because the low end of the reference range commands full reverse operation, do not use 0 V as the lower end of the reference range. Doing so means that if the control signal is lost (which is a 0 V input), the result is full reverse operation. Instead, use the following set-up so that loss of the analogue input triggers a fault, stopping the drive:

- Set parameter 1301 MINIMUM AI1 (1304 MINIMUM AI2) at 20% (2 V or 4 mA).
- Set parameter 3021 AI1 FAULT LIMIT to a value 5% or higher.
- Set parameter 3001 AI<MIN FUNCTION to 1 (FAULT).

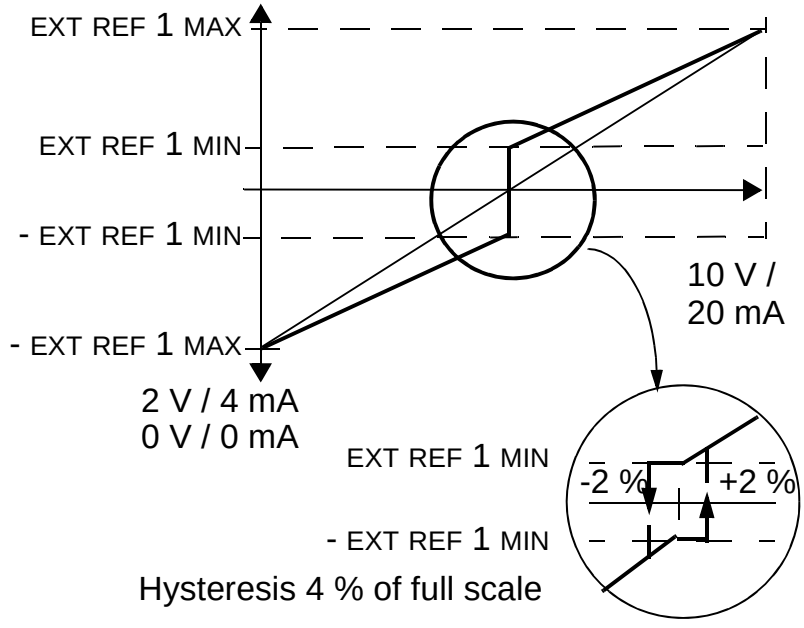

Code	Description	Range
	4 = AI2/JOYST – Defines analogue input 2 (AI2), configured for joystick operation, as the reference source. • See above (AI2/JOYST) description. 5 = DI3U,4D(R) – Defines digital inputs as the speed reference source (motor potentiometer control). • Digital input DI3 increases the speed (the U stands for “up”). • Digital input DI4 decreases the speed (the D stands for “down”). • A Stop command resets the reference to zero (the R stands for “reset”). • Parameter 2205 ACCELER TIME 2 controls the reference signal’s rate of change. 6 = DI3U,4D – Same as above (DI3U,4D(R)), except: • A Stop command does not reset the reference to zero. The reference is stored. • When the drive restarts, the motor ramps up (at the selected acceleration rate) to the stored reference. 7 = DI5U,6D – Same as above (DI3U,4D), except that DI5 and DI6 are the digital inputs used. 8 = COMM – Defines the fieldbus as the reference source. 9 = COMM+AI1 – Defines a fieldbus and analogue input 1 (AI1) combination as the reference source. See *Analogue input reference correction* on page *180*. 10 = COMM*AI1 – Defines a fieldbus and analogue input 1 (AI1) combination as the reference source. See *Analogue input reference correction* on page *180*. 11 = DI3U,4D(RNC) – Same as DI3U,4D(R) above, except that: • Changing the control source (EXT1 to EXT2, EXT2 to EXT1, LOC to REM) does not copy the reference. 12 = DI3U,4D(NC) – Same as DI3U,4D above, except that: • Changing the control source (EXT1 to EXT2, EXT2 to EXT1, LOC to REM) does not copy the reference. 13 = DI5U,6D(NC) – Same as DI3U,4D above, except that: • Changing the control source (EXT1 to EXT2, EXT2 to EXT1, LOC to REM) does not copy the reference. 14 = AI1+AI2 – Defines an analogue input 1 (AI1) and analogue input 2 (AI2) combination as the reference source. See *Analogue input reference correction* on page *180*. 15 = AI1*AI2 – Defines an analogue input 1 (AI1) and analogue input 2 (AI2) combination as the reference source. See *Analogue input reference correction* on page *180*. 16 = AI1-AI2 – Defines an analogue input 1 (AI1) and analogue input 2 (AI2) combination as the reference source. See *Analogue input reference correction* on page *180*. 17 = AI1/AI2 – Defines an analogue input 1 (AI1) and analogue input 2 (AI2) combination as the reference source. See *Analogue input reference correction* on page *180*.	

Code	Description	Range
	20 = KEYPAD(RNC) – Defines the control panel as the reference source. A Stop command resets the reference to zero (the R stands for reset.). Changing the control source (EXT1 to EXT2, EXT2 to EXT1) does not copy the reference. 21 = KEYPAD(NC) – Defines the control panel as the reference source. A Stop command does not reset the reference to zero. The reference is stored. Changing the control source (EXT1 to EXT2, EXT2 to EXT1) does not copy the reference. **Analogue input reference correction** Parameter values 9, 10, and 14…17 use the formula in the following table.	

Value setting	Calculation of the AI reference
C + B	C value + (B value - 50% of reference value)
C * B	C value · (B value / 50% of reference value)
C - B	(C value + 50% of reference value) - B value
C / B	(C value · 50% of reference value) / B value

Where:
- C = Main reference value
  (= COMM for values 9, 10 and = AI1 for values 14…17).
- B = Correcting reference
  (= AI1 for values 9, 10 and = AI2 for values 14…17).

Example: The figure shows the reference source curves for value settings 9, 10, and 14…17, where**:**
- C = 25%.
- P 4012 SETPOINT MIN = 0.
- P 4013 SETPOINT MAX = 0.
- B varies along the horizontal axis.

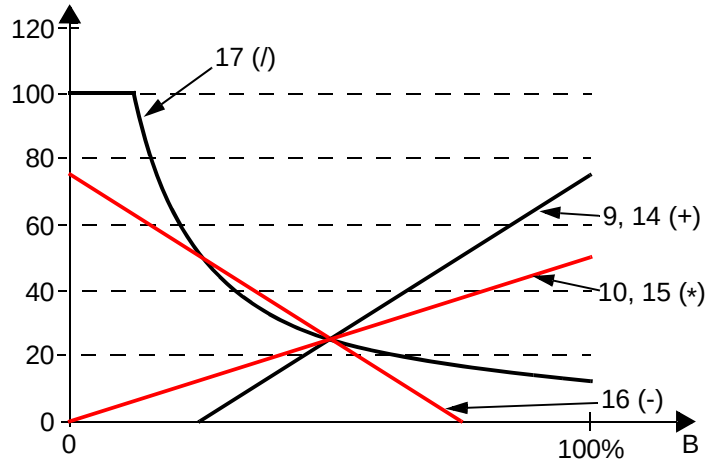

1104	**REF1 MIN** Sets the minimum for external reference 1. • The minimum analogue input signal (as a percentage of the full signal in volts or amperes) corresponds to REF1 MIN in Hz/rpm. • Parameter 1301 MINIMUM AI1 or 1304 MINIMUM AI2 sets the minimum analogue input signal. • These parameters (reference and analogue min. and max. settings) provide scale and offset adjustment for the reference.	**0…500 Hz / 0…30000 rpm**

Code	Description	Range
1105	**REF1 MAX** Sets the maximum for external reference 1. • The maximum analogue input signal (as a percentage of the full signal in volts or amperes) corresponds to REF1 MAX in Hz/rpm. • Parameter 1302 MAXIMUM AI1 or 1305 MAXIMUM AI2 sets the maximum analogue input signal. 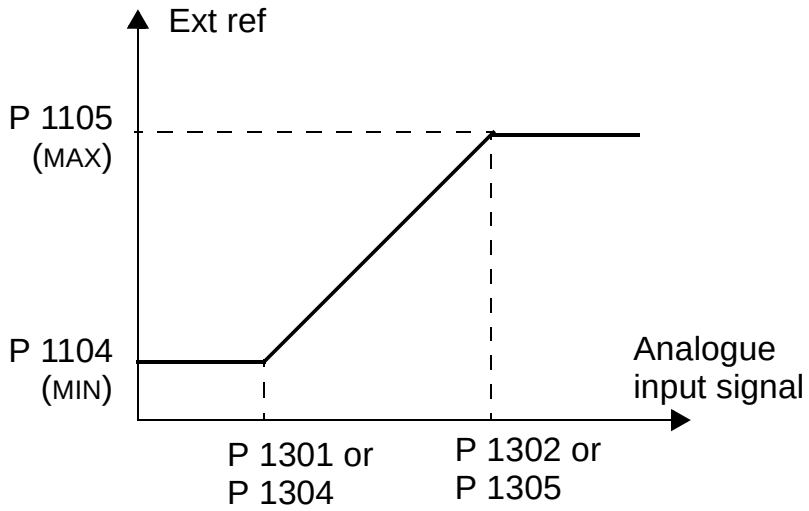 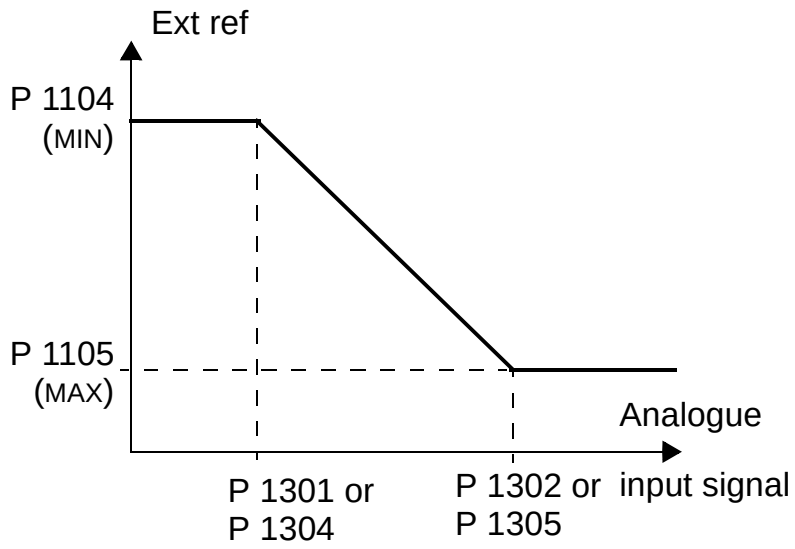 	**0…500 Hz / 0…30000 rpm**

8

Code	Description	Range
1106	**REF2 SELECT** Selects the signal source for external reference REF2. 0…17 – Same as for parameter 1103 REF1 SELECT 19 = PID1OUT – The reference is taken from the PID1 output. See *Group 40: PROCESS PID SET 1* and *Group 41: PROCESS PID SET 2*. 20…21 – Same as for parameter 1103 REF1 SELECT. 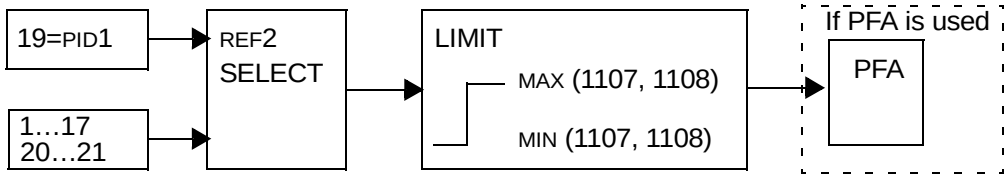 	**0…17, 19…21**
1107	**REF2 MIN** Sets the minimum for external reference 2. • The minimum analogue input signal (in volts or amperes) corresponds to REF2 MIN in %. • Parameter 1301 MINIMUM AI1 or 1304 MINIMUM AI2 sets the minimum analogue input signal. • This parameter sets the minimum frequency reference. • The value is a percentage of the: – maximum frequency or speed – maximum process reference – nominal torque.	**0…100%** **(0…600% for torque)**
1108	**REF2 MAX** Sets the maximum for external reference 2. • The maximum analogue input signal (in volts or amperes) corresponds to REF2 MAX in %. • Parameter 1302 MAXIMUM AI1 or 1305 MAXIMUM AI2 sets the maximum analogue input signal. • This parameter sets the maximum frequency reference. • The value is a percentage of the: – maximum frequency or speed – maximum process reference – nominal torque.	**0…100%** **(0…600% for torque)**

Group 12: CONSTANT SPEEDS

This group defines a set of constant speeds. In general:

- You can program up to 7 constant speeds, ranging from 0…500 Hz or 0…30000 rpm.
- Values must be positive (no negative speed values for constant speeds).
- Constant speed selections are ignored if:
  - the process PID reference is followed, or
  - the drive is in local control mode, or
  - PFA (Pump and Fan Alternation) is active.

Note: Parameter 1208 CONST SPEED 7 acts also as a so-called fault speed, which may be activated if the control signal is lost. Refer to parameter 3001 AI<MIN FUNCTION, parameter 3002 PANEL COMM ERR and 3018 COMM FAULT FUNC.

Code	Description	Range
1201	**CONST SPEED SEL**	**-14…14**

Defines the digital inputs used to select constant speeds. See general comments in the introduction.
0 = NOT SEL – Disables the constant speed function.
1 = DI1 – Selects constant speed 1 with digital input DI1.
• Digital input activated = constant speed 1 activated.
2…6 = DI2…DI6 – Selects constant speed 1 with digital input DI2…DI6.
• See above.
7 = DI1,2 – Selects one of three constant speeds (1…3) using DI1 and DI2.
• Uses two digital inputs, as defined below (0 = DI de-activated, 1 = DI activated):

DI1	DI2	Function
0	0	No constant speed
1	0	Constant speed 1 (1202)
0	1	Constant speed 2 (1203)
1	1	Constant speed 3 (1204)

• Can be set up as a so-called fault speed, which is activated if the control signal is lost. Refer to parameter 3001 AI<MIN function and parameter 3002 PANEL COMM ERR.

Code	Description	Range
	8 = DI2,3 – Selects one of three constant speeds (1…3) using DI2 and DI3. • See above (DI1,2) for code. 9 = DI3,4 – Selects one of three constant speeds (1…3) using DI3 and DI4. • See above (DI1,2) for code. 10 = DI4,5 – Selects one of three constant speeds (1…3) using DI4 and DI5. • See above (DI1,2) for code. 11 = DI5,6 – Selects one of three constant speeds (1…3) using DI5 and DI6. • See above (DI1,2) for code. 12 = DI1,2,3 – Selects one of seven constant speeds (1…7) using DI1, DI2 and DI3. • Uses three digital inputs, as defined below (0 = DI de-activated, 1 = DI activated):	

DI1	DI2	DI3	Function
0	0	0	No constant speed
1	0	0	Constant speed 1 (1202)
0	1	0	Constant speed 2 (1203)
1	1	0	Constant speed 3 (1204)
0	0	1	Constant speed 4 (1205)
1	0	1	Constant speed 5 (1206)
0	1	1	Constant speed 6 (1207)
1	1	1	Constant speed 7 (1208)

13 = DI3,4,5 – Selects one of seven constant speeds (1…7) using DI3, DI4 and DI5.
• See above (DI1,2,3) for code.
14 = DI4,5,6 – Selects one of seven constant speeds (1…7) using DI4, DI5 and DI6.
• See above (DI1,2,3) for code.
15…18 = TIMER 1…4 – Selects constant speed 1 when timer is active.
• See *Group 36: TIMED FUNCTIONS*.
19 = TIMER 1 & 2 – Selects a constant speed depending on the state of timers 1 and 2.
• See parameter 1209.
-1 = DI1(INV) – Selects constant speed 1 with digital input DI1.
• Inverse operation: Digital input de-activated = constant speed 1 activated.
-2…- 6 = DI2(INV)…DI6(INV) – Selects constant speed 1 with digital input.
• See above.

Code	Description	Range

-7 = DI1,2(INV) – Selects one of three constant speeds (1…3) using DI1 and DI2.
- Inverse operation uses two digital inputs, as defined below (0 = DI de-activated, 1 = DI activated):

DI1	DI2	Function
1	1	No constant speed
0	1	Constant speed 1 (1202)
1	0	Constant speed 2 (1203)
0	0	Constant speed 3 (1204)

-8 = DI2,3(INV) – Selects one of three constant speeds (1…3) using DI2 and DI3.
- See above (DI1,2(INV)) for code.

-9 = DI3,4(INV) – Selects one of three constant speeds (1…3) using DI3 and DI4.
- See above (DI1,2(INV)) for code.

-10 = DI4,5(INV) – Selects one of three constant speeds (1…3) using DI4 and DI5.
- See above (DI1,2(INV)) for code.

-11 = DI5,6(INV) – Selects one of three constant speeds (1…3) using DI5 and DI6.
- See above (DI1,2(INV)) for code.

-12 = DI1,2,3(INV) – Selects one of seven constant speeds (1…7) using DI1, DI2 and DI3.
- Inverse operation uses three digital inputs, as defined below (0 = DI de-activated, 1 = DI activated):

DI1	DI2	DI3	Function
1	1	1	No constant speed
0	1	1	Constant speed 1 (1202)
1	0	1	Constant speed 2 (1203)
0	0	1	Constant speed 3 (1204)
1	1	0	Constant speed 4 (1205)
0	1	0	Constant speed 5 (1206)
1	0	0	Constant speed 6 (1207)
0	0	0	Constant speed 7 (1208)

-13 = DI3,4,5(INV) – Selects one of seven constant speeds (1…7) using DI3, DI4 and DI5.
- See above (DI1,2,3(INV)) for code.

-14 = DI4,5,6(INV) – Selects one of seven constant speeds (1…7) using DI4, DI5 and DI6.
- See above (DI1,2,3(INV)) for code.

Code	Description	Range
1202	**CONST SPEED 1** Sets value for constant speed 1. • The range and units depend on parameter 9904 MOTOR CTRL MODE: • Range: 0…30000 rpm when 9904 = 1 (VECTOR:SPEED). • Range: 0…500 Hz when 9904 = 3 (SCALAR:FREQ).	**0…30000 rpm / 0…500 Hz**
1203 … 1208	**CONST SPEED 2…CONST SPEED 7** Each sets a value for a constant speed. • See CONST SPEED 1 above.	**0…30000 rpm / 0…500 Hz**
1209	**TIMED MODE SEL** Defines timer-activated constant speed mode. Timer can be used to change between the external reference and a maximum of three constant speeds or to change between a maximum of 4 selectable speeds, i.e. constant speeds 1, 2, 3 and 4. 1 = EXT/CS1/2/3 – Selects an external speed when no timer is active, selects constant speed 1 when only timer 1 is active, selects constant speed 2 when only timer 2 is active and selects constant speed 3 when both timers 1 and 2 are active. 2 = CS1/2/3/4 – Selects constant speed 1 when no timer is active, selects constant speed 2 when only timer 1 is active, selects constant speed 3 when only timer 2 is active, selects constant speed 4 when both timers are active.	**1=EXT/CS1/2/3** **2=CS1/2/3/4**

1 = EXT/CS1/2/3

TIMER1	TIMER2	Function
0	0	External reference
1	0	Constant speed 1 (1202)
0	1	Constant speed 2 (1203)
1	1	Constant speed 3 (1204)

2 = CS1/2/3/4

TIMER1	TIMER2	Function
0	0	Constant speed 1 (1202)
1	0	Constant speed 2 (1203)
0	1	Constant speed 3 (1204)
1	1	Constant speed 4 (1205)

Group 13: ANALOGUE INPUTS

This group defines the limits and the filtering for analogue inputs.

Code	Description	Range
1301	**MINIMUM AI1** Defines the minimum value of the analogue input. • Define value as a percentage of the full analogue signal range. See example below. • The minimum analogue input signal corresponds to 1104 REF1 MIN or 1107 REF2 MIN. • MINIMUM AI cannot be greater than MAXIMUM AI. • These parameters (reference and analogue min. and max. settings) provide scale and offset adjustment for the reference. • See the figure for parameter 1105. **Example.** To set the minimum analogue input value to 4 mA: • Configure the analogue input for 0…20 mA current signal. • Calculate the minimum (4 mA) as a percentage of the full range (20 mA) = 4 mA / 20 mA · 100% = 20%	**0…100%**
1302	**MAXIMUM AI1** Defines the maximum value of the analogue input. • Define value as a percentage of the full analogue signal range. • The maximum analogue input signal corresponds to 1105 REF1 MAX or 1108 REF2 MAX. • See the figure for parameter 1105.	**0…100%**
1303	**FILTER AI1** Defines the filter time constant for analogue input 1 (AI1). • The filtered signal reaches 63% of a step change within the time specified. 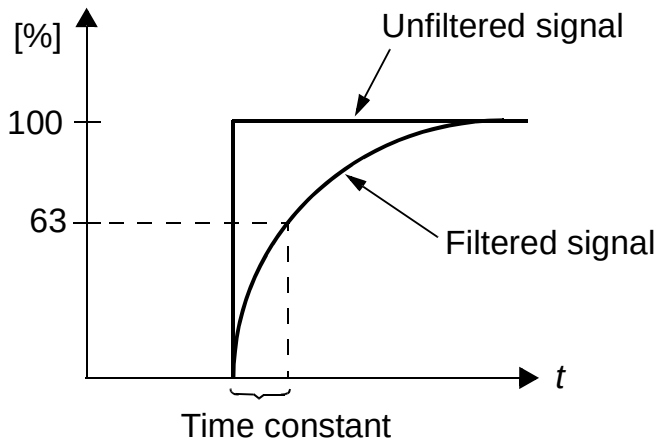 	**0…10 s**
1304	**MINIMUM AI2** Defines the minimum value of the analogue input. • See MINIMUM AI1 above.	**0…100%**

Code	Description	Range
1305	**MAXIMUM AI2** Defines the maximum value of the analogue input. • See MAXIMUM AI1 above.	**0…100%**
1306	**FILTER AI2** Defines the filter time constant for analogue input 2 (AI2). • See FILTER AI1 above.	**0…10 s**

Group 14: RELAY OUTPUTS

This group defines the condition that activates each of the relay outputs.

Code	Description	Range
1401	**RELAY OUTPUT 1** Defines the event or condition that activates relay 1 – what relay output 1 means. 0 = NOT SEL – Relay is not used and is de-energized. 1 = READY – Energize the relay when the drive is ready to function. Requires: • Run enable signal is present. • No faults exist. • Supply voltage is within range. • Emergency Stop command is not on. 2 = RUN – Energize the relay when the drive is running. 3 = FAULT(-1) – Energize the relay when power is applied. De-energize when a fault occurs. 4 = FAULT – Energize the relay when a fault is active. 5 = ALARM – Energize the relay when an alarm is active. 6 = REVERSED – Energize the relay when the motor rotates in reverse direction. 7 = STARTED – Energize the relay when the drive receives a start command (even if Run enable signal is not present). De-energize the relay when the drive receives a stop command or a fault occurs. 8= SUPRV1 OVER – Energize the relay when the first supervised parameter (3201) exceeds the limit (3203). • See *Group 32: SUPERVISION*. 9 = SUPRV1 UNDER – Energize the relay when the first supervised parameter (3201) drops below the limit (3202). • See *Group 32: SUPERVISION*. 10 = SUPRV2 OVER – Energize the relay when the second supervised parameter (3204) exceeds the limit (3206). • See *Group 32: SUPERVISION*. 11 = SUPRV2 UNDER – Energize the relay when the second supervised parameter (3204) drops below the limit (3205). • See *Group 32: SUPERVISION*. 12 = SUPRV3 OVER – Energize the relay when the third supervised parameter (3207) exceeds the limit (3209). • See *Group 32: SUPERVISION*. 13 = SUPRV3 UNDER – Energize the relay when the third supervised parameter (3207) drops below the limit (3208). • See *Group 32: SUPERVISION*.	**0…47**

Code	Description	Range
	14 = AT SET POINT – Energize the relay when the output frequency is equal to the reference frequency. 15 = FAULT(RST) – Energize the relay when the drive is in a fault condition and will reset after the programmed auto-reset delay. • See parameter 3103 DELAY TIME. 16 = FLT/ALARM – Energize the relay when a fault or alarm occurs. 17 = EXT CTRL – Energize the relay when external control is selected. 18 = REF 2 SEL – Energize the relay when EXT2 is selected. 19 = CONST FREQ – Energize the relay when a constant speed is selected. 20 = REF LOSS – Energize the relay when the reference or active control location is lost. 21 = OVERCURRENT – Energize the relay when an overcurrent alarm or fault occurs. 22 = OVERVOLTAGE – Energize the relay when an overvoltage alarm or fault occurs. 23 = DRIVE TEMP – Energize the relay when a drive or control board overtemperature alarm or fault occurs. 24 = UNDERVOLTAGE – Energize the relay when an undervoltage alarm or fault occurs. 25 = AI1 LOSS – Energize the relay when AI1 signal is lost. 26 = AI2 LOSS – Energize the relay when AI2 signal is lost. 27 = MOTOR TEMP – Energize the relay when a motor overtemperature alarm or fault occurs. 28 = STALL – Energize the relay when a stall alarm or fault exists. 30 = PID SLEEP – Energize the relay when the PID sleep function is active. 31 = PFA – Use the relay to start/stop motor in PFA control (See *Group 81: PFA CONTROL*). • Use this option only when PFA control is used. • Selection activated / deactivated when the drive is not running. 32 = AUTOCHANGE – Energize the relay when PFA autochange operation is performed. • Use this option only when PFA control is used. 33 = FLUX READY – Energize the relay when the motor is magnetized and able to supply nominal torque (the motor has reached nominal magnetizing). 34 = USER MACRO 2 – Energize the relay when User Parameter Set 2 is active.	

Code	Description	Range

35 = COMM – Energize the relay based on the input from the fieldbus communication.
- Fieldbus writes a binary code in parameter 0134 that energizes relay 1…relay 6 according to the table below.
- 0 = De-energize the relay, 1 = Energize the relay.

Par. 0134	Binary	RO6	RO5	RO4	RO3	RO2	RO1
0	000000	0	0	0	0	0	0
1	000001	0	0	0	0	0	1
2	000010	0	0	0	0	1	0
3	000011	0	0	0	0	1	1
4	000100	0	0	0	1	0	0
5…62	…	…	…	…	…	…	…
63	111111	1	1	1	1	1	1

36 = COMM(-1) – Energize the relay based on the input from the fieldbus communication.
- Fieldbus writes a binary code in parameter 0134 that energizes relay 1…relay 6 according to the table below.
- 0 = De-energize the relay, 1 = Energize the relay.

Par. 0134	Binary	RO6	RO5	RO4	RO3	RO2	RO1
0	000000	1	1	1	1	1	1
1	000001	1	1	1	1	1	0
2	000010	1	1	1	1	0	1
3	000011	1	1	1	1	0	0
4	000100	1	1	1	0	1	1
5…62	…	…	…	…	…	…	…
63	111111	0	0	0	0	0	0

37 = TIMER 1 – Energize the relay when timer 1 is activated.
- See *Group 36: TIMED FUNCTIONS*.

38…40 = TIMER 2…4 – Energize the relay when timer 2…4 is active.
- See TIMER 1 above.

41 = MNT TRIG FAN – Energize the relay when the cooling fan counter is triggered.

42 = MNT TRIG REV – Energize the relay when the revolutions counter is triggered.

43 = MNT TRIG RUN – Energize the relay when the run time counter is triggered.

44 = MNT TRIG MWH – Energize the relay when the power consumption counter is triggered.

45 = OVERRIDE – Energize the relay when override is activated.

46 = START DELAY – Energize relay when a start delay is active.

47 = USER LOAD C – Energize the relay when a user load curve fault or alarm occurs.

Code	Description	Range
1402	**RELAY OUTPUT 2** Defines the event or condition that activates relay 2 – what relay output 2 means. • See 1401 RELAY OUTPUT 1.	**0…47**
1403	**RELAY OUTPUT 3** Defines the event or condition that activates relay 3 – what relay output 3 means. • See 1401 RELAY OUTPUT 1.	**0…47**
1404	**RO 1 ON DELAY** Defines the switch-on delay for relay 1. • On/off delays are ignored when relay output 1401 is set to PFA. 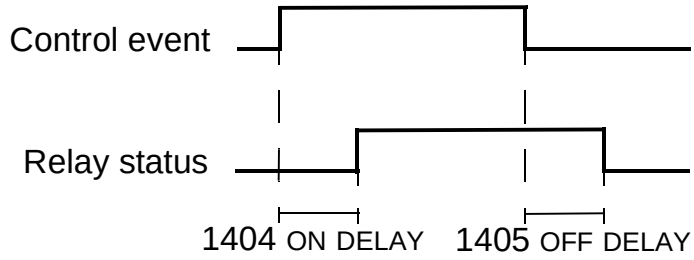	**0…36**
1405	**RO 1 OFF DELAY** Defines the switch-off delay for relay 1. • On/off delays are ignored when relay output 1401 is set to PFA.	**0…3600 s**
1406	**RO 2 ON DELAY** Defines the switch-on delay for relay 2. • See RO 1 ON DELAY.	**0…3600 s**
1407	**RO 2 OFF DELAY** Defines the switch-off delay for relay 2. • See RO 1 OFF DELAY.	**0…3600 s**
1408	**RO 3 ON DELAY** Defines the switch-on delay for relay 3. • See RO 1 ON DELAY.	**0…3600 s**
1409	**RO 3 OFF DELAY** Defines the switch-off delay for relay 3. • See RO 1 OFF DELAY.	**0…3600 s**
1410 … 1412	**RELAY OUTPUT 4…6** Defines the event or condition that activates relay 4…6 – what relay outputs 4…6 means. • See 1401 RELAY OUTPUT 1.	**0…47**
1413	**RO 4 ON DELAY** Defines the switch-on delay for relay 4. • See RO 1 ON DELAY.	**0…3600 s**

Code	Description	Range
1414	**RO 4 OFF DELAY** Defines the switch-off delay for relay 4. • See RO 1 OFF DELAY.	**0…3600 s**
1415	**RO 5 ON DELAY** Defines the switch-on delay for relay 5. • See RO 1 ON DELAY.	**0…3600 s**
1416	**RO 5 OFF DELAY** Defines the switch-off delay for relay 5. • See RO 1 OFF DELAY.	**0…3600 s**
1417	**RO 6 ON DELAY** Defines the switch-on delay for relay 6. • See RO 1 ON DELAY.	**0…3600 s**
1418	**RO 6 OFF DELAY** Defines the switch-off delay for relay 6. • See RO 1 OFF DELAY.	**0…3600 s**

Group 15: ANALOGUE OUTPUTS

This group defines the drive's analogue (current signal) outputs. The drive's analogue outputs can be:

- any parameter of *Group 01: OPERATING DATA*
- limited to programmable minimum and maximum values of output current
- scaled (and/or inverted) by defining the minimum and maximum values of the source parameter (or content). Defining a maximum value (parameter 1503 or 1509) that is less than the content minimum value (parameter 1502 or 1508) results in an inverted output.
- filtered.

Code	Description	Range
1501	**AO1 CONTENT SEL** Defines the content for analogue output AO1. 99 = EXCITE PTC – Provides a current source for sensor type PTC. Output = 1.6 mA. See *Group 35: MOTOR TEMP MEAS*. 100 = EXCITE PT100 – Provides a current source for sensor type PT100. Output = 9.1 mA. See *Group 35: MOTOR TEMP MEAS*. 101…159 – Output corresponds to a parameter in *Group 01: OPERATING DATA*. • Parameter defined by value (e.g. value 102 = parameter 0102)	**99…159**

Code	Description	Range
1502	**AO1 CONTENT MIN** Sets the minimum content value. • Content is the parameter selected by parameter 1501. • Minimum value refers to the minimum content value that will be converted to an analogue output. • These parameters (content and current min. and max. settings) provide scale and offset adjustment for the output. See the figure. 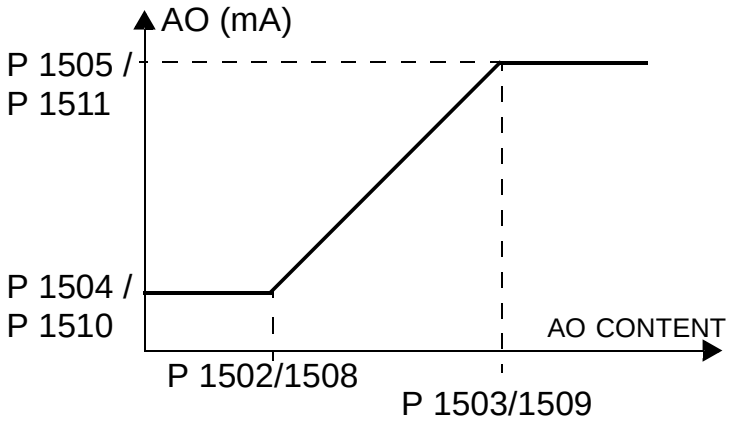 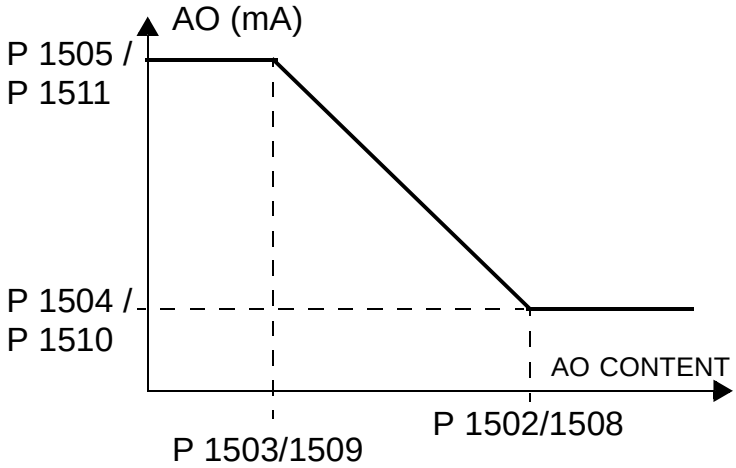 	**-**
1503	**AO1 CONTENT MAX** Sets the maximum content value • Content is the parameter selected by parameter 1501. • Maximum value refers to the maximum content value that will be converted to an analogue output.	**-**
1504	**MINIMUM AO1** Sets the minimum output current.	**0.0…20.0 mA**
1505	**MAXIMUM AO1** Sets the maximum output current.	**0.0…20.0 mA**
1506	**FILTER AO1** Defines the filter time constant for AO1. • The filtered signal reaches 63% of a step change within the time specified. • See the figure for parameter 1303.	**0.0…10.0 s**
1507	**AO2 CONTENT SEL** Defines the content for analogue output AO2. See AO1 CONTENT SEL above.	**99…159**

Code	Description	Range
1508	**AO2 CONTENT MIN** Sets the minimum content value. See AO1CONTENT MIN above.	**-**
1509	**AO2 CONTENT MAX** Sets the maximum content value. See AO1 CONTENT MAX above.	**-**
1510	**MINIMUM AO2** Sets the minimum output current. See MINIMUM AO1 above.	**0…20.0 mA**
1511	**MAXIMUM AO2** Sets the maximum output current. See MAXIMUM AO1 above.	**0…20.0 mA**
1512	**FILTER AO2** Defines the filter time constant for AO2. See FILTER AO1 above.	**0…10.0 s**

Group 16: SYSTEM CONTROLS

This group defines a variety of system level locks, resets and enables.

Code	Description	Range
1601	**RUN ENABLE** Selects the source of the Run enable signal. See the figure on page 202. 0 = NOT SEL – Allows the drive to start without an external Run enable signal. 1 = DI1 – Defines digital input DI1 as the Run enable signal. • This digital input must be activated for Run enable. • If the voltage drops and de-activates this digital input, the drive will coast to stop and not start until the Run enable signal resumes. 2…6 = DI2…DI6 – Defines digital input DI2…DI6 as the Run enable signal. • See DI1 above. 7 = COMM – Assigns the fieldbus Command Word as the source for the Run enable signal. • Bit 6 of Command Word 1 (parameter 0301) activates the Run disable signal. • See the fieldbus user's manual for detailed instructions. -1 = DI1(INV) – Defines an inverted digital input DI1 as the Run enable signal. • This digital input must be de-activated for Run enable. • If this digital input activates, the drive will coast to stop and not start until the Run enable signal resumes. -2…-6 = DI2(INV)…DI6(INV) – Defines an inverted digital input DI2…DI6 as the Run enable signal. • See DI1(INV) above.	**-6…7**
1602	**PARAMETER LOCK** Determines if the control panel (operator keypad) can change parameter values. • This lock does not limit parameter changes made by macros. • This lock does not limit parameter changes written by fieldbus inputs. 0 = LOCKED – You cannot use the control panel to change parameter values. • The lock can be opened by entering the valid pass code to parameter 1603. 1 = OPEN – You can use the control panel to change parameter values. 2 = NOT SAVED – You can use the control panel to change parameter values, but they are not stored in permanent memory. • Set parameter 1607 PARAM SAVE to 1 (SAVE) to store changed parameter values to memory.	**0…2**

Code	Description	Range
1603	**PASS CODE** Entering the correct pass code unlocks the parameter lock. • See parameter 1602 above. • Code 358 opens the lock. • This entry reverts back to 0 automatically.	**0…65535**
1604	**FAULT RESET SEL** Selects the source for the fault reset signal. The signal resets the drive after a fault trip if the cause of the fault no longer exists. 0 = KEYPAD – Defines the control panel as the only fault reset source. • Fault reset is always possible with control panel. 1 = DI1 – Defines digital input DI1 as a fault reset source. • Activating the digital input resets the drive. 2…6 = DI2…DI6 – Defines digital input DI2…DI6 as a fault reset source. • See DI1 above. 7 = START/STOP – Defines the Stop command as a fault reset source. • Do not use this option when fielbus communication provides the start, stop and direction commands. 8 = COMM – Defines the fieldbus as a fault reset source. • The Command Word is supplied through fieldbus communication. • The bit 4 of Command Word 1 (parameter 0301) resets the drive. -1 = DI1(INV) – Defines an inverted digital input DI1 as a fault reset source. • De-activating the digital input resets the drive. -2…-6 = DI2(INV)…DI6(INV) – Defines an inverted digital input DI2…DI6 as a fault reset source. • See DI1(INV) above.	**-6…8**

Code	Description	Range
1605	**USER PAR SET CHG**	**-6…6**
	Defines control for changing the User Parameter Set. • See parameter 9902 APPLIC MACRO. • The drive must be stopped to change User Parameter Sets. • During a change, the drive will not start. **Note:** Always save the User Parameter Set after changing any parameter settings or performing a motor identification. • Whenever the power is cycled, or parameter 9902 APPLIC MACRO is changed, the drive loads the last settings saved. Any unsaved changes to a user parameter set are lost. **Note:** The value of this parameter (1605) is not included in the User Parameter Sets, and it does not change if User Parameter Sets change. **Note:** You can use a relay output to supervise the selection of User Parameter Set 2. • See parameter 1401. 0 = NOT SEL – Defines the control panel (operator keypad) as the only control for changing User Parameter Sets (using parameter 9902). 1 = DI1 – Defines digital input DI1 as a control for changing User Parameter Sets. • The drive loads User Parameter Set 1 on the falling edge of the digital input. • The drive loads User Parameter Set 2 on the rising edge of the digital input. • The User Parameter Set changes only when the drive is stopped. 2…6 = DI2…DI6 – Defines digital input DI2…DI6 as the control for changing User Parameter Sets. • See DI1 above. -1 = DI1(INV) – Defines an inverted digital input DI1 as a control for changing User Parameter Sets. • The drive loads User Parameter Set 1 on the rising edge of the digital input. • The drive loads User Parameter Set 2 on the falling edge of the digital input. • The User Parameter Set changes only when the drive is stopped. -2…-6 = DI2(INV)…DI6(INV) – Defines an inverted digital input DI2…DI6 as a control for changing User Parameter Sets. • See DI1(INV) above.	

Code	Description	Range
1606	**LOCAL LOCK** Defines control for the use of the HAND mode. The HAND mode allows drive control from the control panel (operator keypad). • When LOCAL LOCK is active, the control panel cannot change to HAND mode. 0 = NOT SEL – Disables the lock. The control panel can select HAND and control the drive. 1 = DI1 – Defines digital input DI1 as the control for setting the local lock. • Activating the digital input locks out local control. • De-activating the digital input enables the HAND selection. 2…6 = DI2…DI6 – Defines digital input DI2…DI6 as the control for setting the local lock. • See DI1 above. 7 = ON – Sets the lock. The control panel cannot select HAND, and cannot control the drive. 8 = COMM – Defines bit 14 of Command Word 1 (parameter 0301) as the control for setting the local lock. • The Command Word is supplied through fieldbus communication. -1 = DI1(INV) – Defines an inverted digital input DI1 as the control for setting the local lock. • De-activating the digital input locks out local control. • Activating the digital input enables the HAND selection. -2…-6 = DI2(INV)…DI6(INV) – Defines an inverted digital input DI2…DI6 as the control for setting the local lock. • See DI1(INV) above.	**-6…8**
1607	**PARAM SAVE** Saves all altered parameters to permanent memory. • Parameters altered through a fieldbus are not automatically saved to permanent memory. To save, you must use this parameter. • If 1602 PARAMETER LOCK = 2 (NOT SAVED), parameters altered from the control panel (operator keypad) are not saved. To save, you must use this parameter. • If 1602 PARAMETER LOCK = 1 (OPEN), parameters altered from the control panel are stored immediately to permanent memory. 0 = DONE – Value changes automatically when all parameters are saved. 1 = SAVE… – Saves altered parameters to permanent memory.	**0=DONE, 1=SAVE**

Code	Description	Range
1608	**START ENABLE 1** Selects the source of the Start enable 1 signal. See the figure on page 202. **Note:** Start enable functionality **differs** from the Run enable functionality. 0 = NOT SEL – Allows the drive to start without an external Start enable signal. 1 = DI1 – Defines digital input DI1 as the Start enable 1 signal. • This digital input must be activated for Start enable 1 signal. • If the voltage drops and de-activates this digital input, the drive will coast to stop and show alarm 2021 on the control panel display. The drive will not start until Start enable 1 signal resumes. 2…6 = DI2…DI6 – Defines digital input DI2…DI6 as the Start enable 1 signal. • See DI1 above. 7 = COMM – Assigns the fieldbus Command Word as the source for the Start enable 1 signal. • Bit 2 of Command Word 2 (parameter 0302) activates the Start disable 1 signal. • See the fieldbus user's manual for detailed instructions. -1 = DI1(INV) – Defines an inverted digital input DI1 as the Start enable 1 signal. -2…-6 = DI2 (INV)…DI6(INV) – Defines an inverted digital input DI2…DI6 as the Start enable 1 signal. • See DI1 (INV) above.	**-6…7**

Code	Description	Range

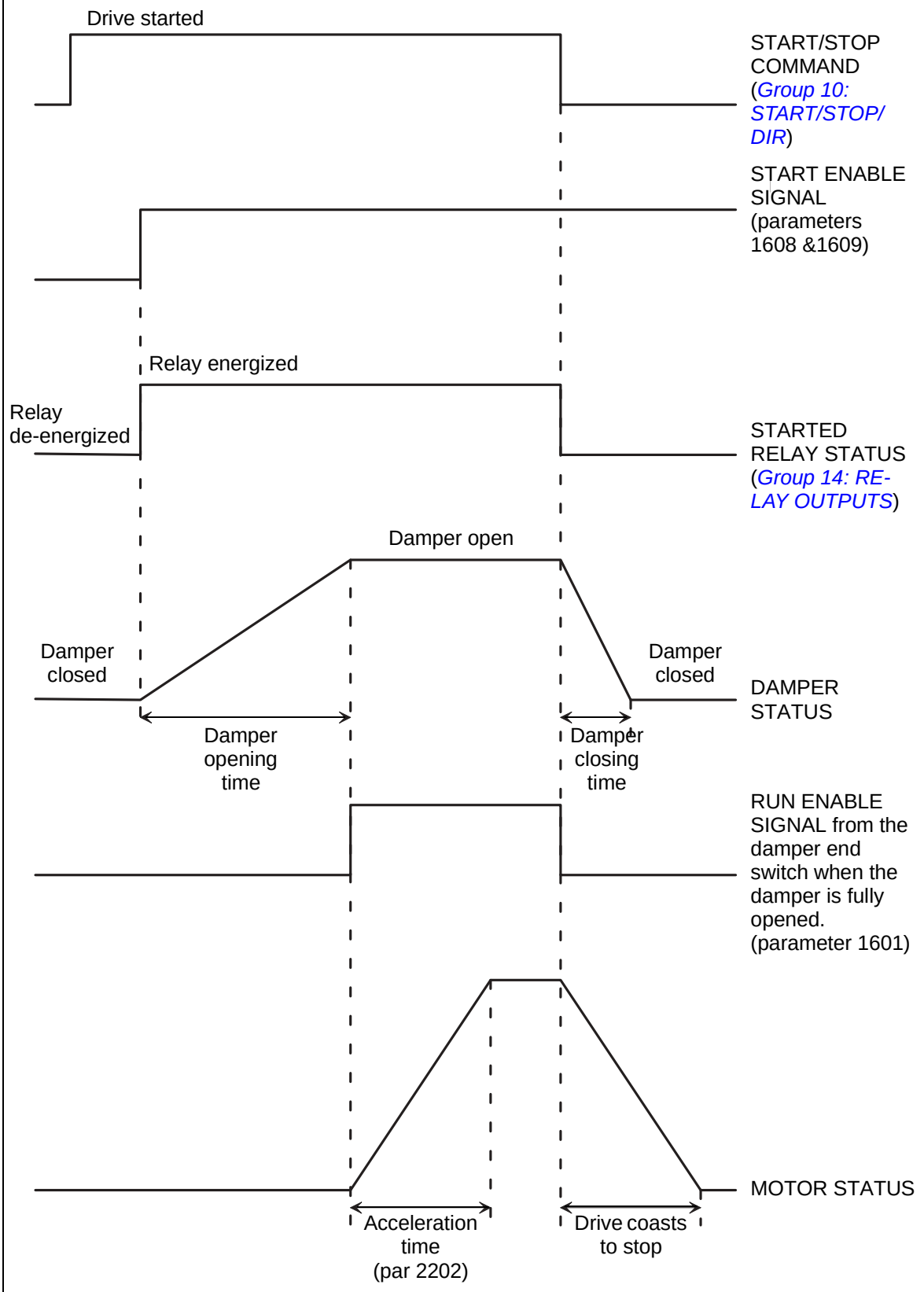

Code	Description	Range
1609	**START ENABLE 2** Selects the source of the Start enable 2 signal. **Note:** Start enable functionality **differs** from the Run enable functionality. 0 = NOT SEL – Allows the drive to start without an external Start enable signal. 1 = DI1 – Defines digital input DI1 as the Start enable 2 signal. • This digital input must be activated for Start enable 2 signal. • If the voltage drops and de-activates this digital input, the drive will coast to stop and show alarm 2022 on the control panel display. The drive will not start until the Start enable 2 signal resumes. 2…6 = DI2…DI6 – Defines digital input DI2…DI6 as the Start enable 2 signal. • See DI1 above. 7 = COMM – Assigns the fieldbus Command Word as the source for the Start enable 2 signal. • Bit 3 of Command Word 2 (parameter 0302) activates the Start disable 2 signal. • See the fieldbus user's manual for detailed instructions. -1 = DI1(INV) – Defines an inverted digital input DI1 as the Start enable 2 signal. -2…-6 = DI2 (INV)…DI6(INV) – Defines an inverted digital input DI2…DI6 as the Start enable 2 signal. • See DI1 (INV) above.	**-6…7**
1610	**DISPLAY ALARMS** Controls the visibility of the following alarms: • 2001 OVERCURRENT • 2002 OVERVOLTAGE • 2003 UNDERVOLTAGE • 2009 DEVICE OVERTEMP For more information, see section *Alarm listing* on page *363*. 0 = NO – The above alarms are suppressed. 1 = YES – All of the above alarms are enabled.	**0=NO, 1=YES**

8

Code	Description	Range
1611	**PARAMETER VIEW** Selects the parameter view, i.e. which parameters are shown. **Note:** This parameter is visible only when it is activated by the optional FlashDrop device. The FlashDrop is designed for fast copying of parameters to unpowered drives. It allows easy customizing of the parameter list, e.g. selected parameters can be hidden. For more information, see *MFDT-01 FlashDrop User's Manual* [3AFE68591074 (English)]. FlashDrop parameter values are activated by setting parameter 9902 to 31 (LOAD FD SET). 0 = DEFAULT – Complete long and short parameter lists are shown. 1 = FLASHDROP – FlashDrop parameter list is shown. Does not include short parameter list. Parameters that are hidden by the FlashDrop device are not visible.	**0=DEFAULT,** **1=FLASHDROP**

Group 17: OVERRIDE

This group defines the source for the override activation signal, the override speed/frequency and pass code and how the override is enabled and disabled.

The override feature can be used e.g. in fire situations.

When the override DI is activated, the drive stops and then accelerates to the preset speed or frequency. When the DI is deactivated, the drive stops and reboots. If the start command, Run enable and Start enable are active in the AUTO mode, the drive starts automatically and continues normally after override mode. In the HAND mode, the drive returns to the OFF mode.

When override is active:

- Drive runs at preset speed.
- Drive ignores all keypad commands.
- Drive ignores all commands from communication links.
- Drive ignores all digital inputs except override activation/ deactivation, Run enable and Start enable.
- Drive displays alarm message “2020 OVERRIDE MODE”.

The following faults are ignored:

3	DEV OVERTEMP
6	DC UNDERVOLT
7	AI1 LOSS
8	AI2 LOSS
9	MOT OVERTEMP
10	PANEL LOSS
12	MOTOR STALL
14	EXT FAULT 1
15	EXT FAULT 2
18	THERM FAIL
21	CURR MEAS
22	SUPPLY PHASE
24	OVERSPEED
28	SERIAL 1 ERR
29	EFB CON FILE
30	FORCE TRIP

31	EFB 1
32	EFB 2
33	EFB 3
34	MOTOR PHASE
37	CB OVERTEMP
38	USER LOAD CURVE
1000	PAR HZRPM
1001	PAR PFA REF NEG
1003	PAR AI SCALE
1004	PAR AO SCALE
1006	PAR EXT RO
1007	PAR FBUS
1008	PAR PFA MODE
1016	PAR USER LOAD C

Commissioning the override mode:

1. Enter the parameters in all groups as needed, except group 17.
2. Select the digital input that will activate override mode (P 1701).
3. Enter the frequency or speed reference for override mode (P 1702 or P 1703) according to the motor control mode (P 9904).
4. Enter the pass code [P 1704 (358)].
5. Enable the override mode (P 1705).

Changing the override parameters:

1. If override mode is already enabled, disable it:
   - Enter the pass code (P 1704).
   - Disable the override mode (P 1705).
2. If needed, load the override parameter set (P 9902).
3. Change the parameters as needed, except group 17.
4. Change the parameters in group 17 as needed:
   - Digital input for override mode (P 1701).
   - Frequency or speed reference (P 1702 or P 1703).
5. Enter the pass code (P 1704).

6. Enable the override mode (P 1705). The drive replaces the override parameter set with new values of all parameters.

Code	Description	Range
1701	**OVERRIDE SEL** Selects the source of the override activation signal. 0 = NOT SEL – Override activation signal not selected. 1 = DI1 – Defines digital input DI1 as the override activation signal. • This digital input must be activated for override activation signal. 2…6 = DI2…DI6 – Defines digital input DI2…DI6 as the override activation signal. • See DI1 above. -1 = DI1(INV) – Defines an inverted digital input DI1 as the override activation signal. -2…-6 = DI2 (INV)…DI6(INV) – Defines an inverted digital input DI2…DI6 as the override activation signal. • See DI1 (INV) above.	**-6…6**
1702	**OVERRIDE FREQ** Defines a preset frequency for the override. The direction of rotation is defined by parameter 1003. **Note:** Set this value if motor control mode (parameter 9904) is SCALAR:FREQ (3).	**0…500 Hz**
1703	**OVERRIDE SPEED** Defines a preset speed for the override. The direction of rotation is defined by parameter 1003. **Note:** Set this value if motor control mode (parameter 9904) is VECTOR:SPEED (1).	**0…30.000 rpm**
1704	**OVERRIDE PASS CODE** Entering the correct pass code unlocks parameter 1705 for one change. • Enter the pass code always before changing the value of parameter 1705. • See parameter 1705 below. • The pass code is 358. • The entry reverts back to zero automatically.	**0…65535**

Code	Description	Range
1705	**OVERRIDE ENABLE** Selects whether the override is enabled or disabled. 0 = OFF – Override disabled. 1 = ON – Override enabled. • When enabled, the drive stores the values of all parameters into an override parameter set (see parameter 9902) and the parameters in group 17 will be write protected (except parameter 1704). To change the other parameters in group 17, override has to be disabled. 2 = LOAD – Loads the saved override set into use (as an active parameter set).	**0…2**
1706	**OVERRIDE DIR** Selects the source of the override direction signal. 0 = FORWARD – Assigns forward as the override direction. 1 = DI1 – Defines digital input DI1 as the override direction signal. • De-activating the digital input selects the forward direction. • Activating the digital input selects the reverse direction. 2…6 = DI2…DI6 – Defines digital input DI2…DI6 as the override direction signal. • See DI1 above. 7 = REVERSE – Assigns reverse as the override direction. -1 = DI1(INV) – Defines an inverted digital input DI1 as the override direction signal. • Activating the digital input selects the forward direction. • De-activating the digital input selects the reverse direction. -2…-6 = DI2(INV)…DI6(INV) – Defines an inverted digital input DI2…DI6 as the override direction signal. • See DI1(INV) above.	**-6…7**
1707	**OVERRIDE REF** Selects the source of the override reference. 1 = CONSTANT – Selects a preset frequency or speed for the override. The frequency value is defined by parameter 1702 OVERRIDE FREQ and the speed value by parameter 1703 OVERRIDE SPEED. 2 = PID – The reference is taken from the PID output, see group 40 PROCESS PID SET 1. • **Note:** The following conditions must be met when using PID in the override mode: • PID1 set point (parameter 4010 SET POINT SEL) can be either A1, A2 or INTERNAL. • PID1 parameter set 1 must be active (parameter 4027 PID 1 PARAM SET = SET 1). • Override direction (parameter 1706 OVERRIDE DIR) can be either 0 (FORWARD) or 7 (REVERSE).	**1=CONSTANT, 2=PID**

Group 20: LIMITS

This group defines minimum and maximum limits to be followed in driving the motor – speed, frequency, current, torque, etc.

Code	Description	Range
2001	**MINIMUM SPEED** Defines the minimum speed (rpm) allowed. • A positive (or zero) minimum speed value defines two ranges, one positive and one negative. • A negative minimum speed value defines one speed range. • See the figure. 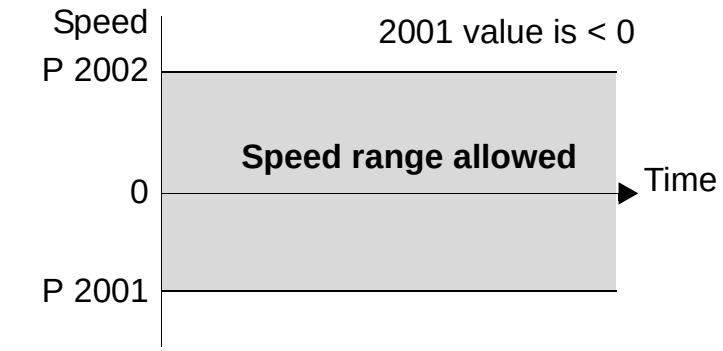 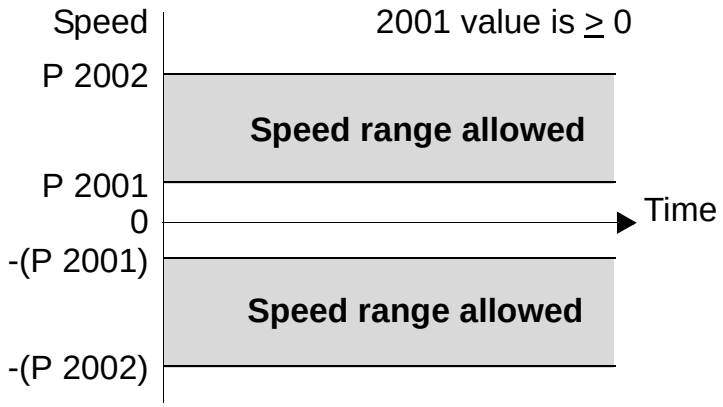 	**-30000…30000 rpm**
2002	**MAXIMUM SPEED** Defines the maximum speed (rpm) allowed.	**0…30000 rpm**
2003	**MAX CURRENT** Defines the maximum output current (A) supplied by the drive to the motor.	**depends on drive type**

Code	Description	Range
2006	**UNDERVOLT CTRL**	**0…2**
	Sets the DC undervoltage controller on or off. When on: • If the DC bus voltage drops due to loss of input power, the undervoltage controller decreases the motor speed in order to keep the DC bus voltage above the lower limit. • When the motor speed decreases, the inertia of the load causes regeneration back into the drive, keeping the DC bus charged, and preventing an undervoltage trip. • The DC undervoltage controller increases power loss ride-through on systems with a high inertia, such as a centrifuge or a fan. 0 = DISABLE – Disables controller. 1 = ENABLE(TIME) – Enables controller with a 500 ms time limit for the operation. 2 = ENABLE – Enables controller without a maximum time limit for the operation.	
2007	**MINIMUM FREQ**	**-500…500 Hz**
	Defines the minimum limit for the drive output frequency. • A positive or zero minimum speed value defines two ranges, one positive and one negative. • A negative minimum speed value defines one speed range. • See the figure. **Note:** Keep MINIMUM FREQ ≤ MAXIMUM FREQ. 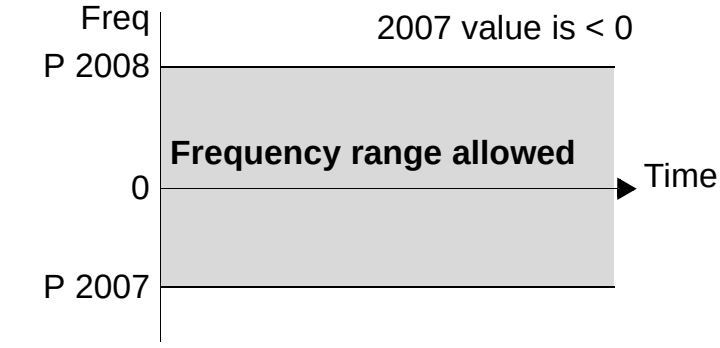 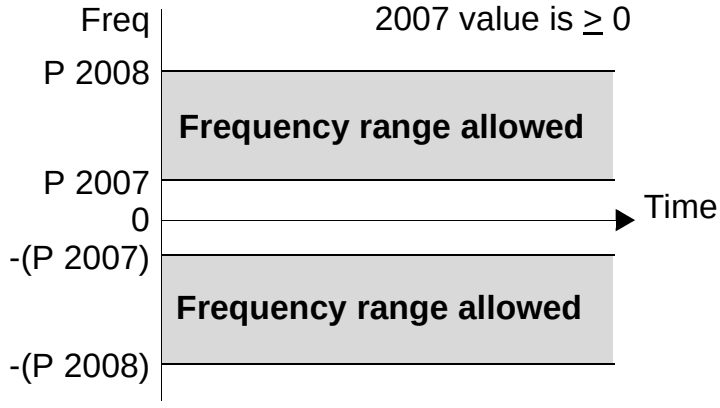 	

Code	Description	Range
2008	**MAXIMUM FREQ** Defines the maximum limit for the drive output frequency.	**0…500 Hz**
2013	**MIN TORQUE SEL** Defines control of the selection between two minimum torque limits (2015 MIN TORQUE 1 and 2016 MIN TORQUE 2). 0 = MIN TORQUE 1 – Selects 2015 MIN TORQUE 1 as the minimum limit used. 1 = DI1 – Defines digital input DI1 as the control for selecting the minimum limit used. • Activating the digital input selects MIN TORQUE 2 value. • De-activating the digital input selects MIN TORQUE 1 value. 2…6 = DI2…DI6 – Defines digital input DI2…DI6 as the control for selecting the minimum limit used. • See DI1 above. 7 = COMM – Defines bit 15 of Command Word 1 (parameter 0301) as the control for selecting the minimum limit used. • The Command Word is supplied through fieldbus communication. -1 = DI1(INV) – Defines an inverted digital input DI1 as the control for selecting the minimum limit used. • Activating the digital input selects MIN TORQUE 1 value. • De-activating the digital input selects MIN TORQUE 2 value. -2…-6 = DI2(INV)…DI6(INV) – Defines an inverted digital input DI2…DI6 as the control for selecting the minimum limit used. • See DI1(INV) above.	**-6…7**

Code	Description	Range
2014	**MAX TORQUE SEL** Defines control of the selection between two maximum torque limits (2017 MAX TORQUE 1 and 2018 MAX TORQUE 2). 0 = MAX TORQUE 1 – Selects 2017 MAX TORQUE 1 as the maximum limit used. 1 = DI1 – Defines digital input DI1 as the control for selecting the maximum limit used. • Activating the digital input selects MAX TORQUE 2 value. • De-activating the digital input selects MAX TORQUE 1 value. 2…6 = DI2…DI6 – Defines digital input DI2…DI6 as the control for selecting the maximum limit used. • See DI1 above. 7 = COMM – Defines bit 15 of Command Word 1 (parameter 0301) as the control for selecting the maximum limit used. • The Command Word is supplied through fieldbus communication. -1 = DI1(INV) – Defines an inverted digital input di1 as the control for selecting the maximum limit used. • Activating the digital input selects MAX TORQUE 1 value. • De-activating the digital input selects MAX TORQUE 2 value. -2…-6 = DI2(INV)…DI6(INV) – Defines an inverted digital input DI2…DI6 as the control for selecting the maximum limit used. • See DI1(INV) above.	**-6…7**
2015	**MIN TORQUE 1** Sets the first minimum limit for torque (%). Value is a percentage of the motor nominal torque.	**-600.0…0%**
2016	**MIN TORQUE 2** Sets the second minimum limit for torque (%). Value is a percentage of the motor nominal torque.	**-600.0…0%**
2017	**MAX TORQUE 1** Sets the first maximum limit for torque (%). Value is a percentage of the motor nominal torque.	**0…600.0%**
2018	**MAX TORQUE 2** Sets the second maximum limit for torque (%). Value is a percentage of the motor nominal torque.	**0…600.0%**

Group 21: START/STOP

This group defines how the motor starts and stops. The ACH550 supports several start and stop modes.

Code	Description	Range
2101	**START FUNCTION** Selects the motor start method. The valid options depend on the value of parameter 9904 MOTOR CTRL MODE. 1 = AUTO – Selects the automatic start mode. • VECTOR:SPEED mode: Optimal start in most cases. Flying start function to a rotating axis and start at zero speed. • SCALAR:FREQ mode: Immediate start from zero frequency. 2 = DC MAGN – Selects the DC Magnetizing start mode. **Note:** The DC Magnetizing start mode cannot start a rotating motor. **Note:** The drive starts when the set pre-magnetizing time (parameter 2103 DC MAGN TIME) has passed, even if motor magnetization is not complete. • VECTOR:SPEED mode: Magnetizes the motor within the time determined by parameter 2103 DC MAGN TIME using DC current. The normal control is released exactly after the magnetizing time. This selection guarantees the highest possible break-away torque. • SCALAR:FREQ mode: Magnetizes the motor within the time determined by the parameter 2103 DC MAGN TIME using DC current. The normal control is released exactly after the magnetizing time. 3 = SCALAR FLYST – Selects the flying start mode. SCALAR:FREQ mode only. • The drive will automatically select the correct output frequency to start a rotating motor. Useful if the motor is already rotating and the drive will start smoothly at the current frequency. 4 = TORQ BOOST – Selects the automatic torque boost mode. SCALAR:FREQ mode only. • May be necessary in drives with high starting torque. • Torque boost is only applied at start, ending when the output frequency exceeds 20 Hz or when output frequency is equal to reference. • In the beginning the motor magnetizes within the time determined by the parameter 2103 DC MAGN TIME using DC current. • See parameter 2110 TORQ BOOST CURR. 5 = FLY + BOOST – Selects both the flying start and the torque boost mode. SCALAR:FREQ mode only. • Flying start routine is performed first and the motor is magnetized. If the speed is found to be zero, the torque boost is done. 8 = RAMP – Immediate start from zero frequency.	**1…8**

Code	Description	Range
2102	**STOP FUNCTION** Selects the motor stop method. 1 = COAST – Selects cutting off the motor power as the stop method. The motor coasts to stop. 2 = RAMP – Selects using a deceleration ramp. • Deceleration ramp is defined by 2203 DECELER TIME 1 or 2206 DECELER TIME 2 (whichever is active).	**1=COAST, 2=RAMP**
2103	**DC MAGN TIME** Defines the pre-magnetizing time for the DC Magnetizing start mode. • Use parameter 2101 to select the start mode. • After the start command, the drive pre-magnetizes the motor for the time defined here, and then starts the motor. • Set the pre-magnetizing time just long enough to allow full motor magnetization. Too long a time heats the motor excessively.	**0…10 s**
2104	**DC HOLD CTL** Selects whether DC current is used for braking. 0 = NOT SEL – Disables the DC current operation. 2 = DC BRAKING – Enables the DC injection braking. • Enables DC injection braking after modulation has stopped. • If parameter 2102 STOP FUNCTION is 1 (COAST), braking is applied after start is removed. • If parameter 2102 STOP FUNCTION IS 2 (RAMP), braking is applied after ramp.	**0=NOT SEL, 2=DC BRAKING**
2106	**DC CURR REF** Defines the DC current control reference as a percentage of parameter 9906 MOTOR NOM CURR.	**0…100%**
2107	**DC BRAKE TIME** Defines the DC brake time after modulation has stopped, if parameter 2104 is 2 (DC BRAKING).	**0…250 s**
2108	**START INHIBIT** Sets the Start inhibit function on or off. The Start inhibit function ignores a pending start command in the following situation (a new start command is required): • A fault is reset. 0 = OFF – Disables the Start inhibit function. 1 = ON – Enables the Start inhibit function.	**0=OFF, 1=ON**

Code	Description	Range
2109	**EMERG STOP SEL** Defines control of the Emergency stop command. When activated: • Emergency stop decelerates the motor using the emergency stop ramp (parameter 2208 EMERG DEC TIME). • Requires an external stop command and removal of the Emergency stop command before the drive can restart. 0 = NOT SEL – Disables the Emergency stop function through digital inputs. 1 = DI1 – Defines digital input DI1 as the control for the Emergency stop command. • Activating the digital input issues an Emergency stop command. • De-activating the digital input removes the Emergency stop command. 2…6 = DI2…DI6 – Defines digital input DI2…DI6 as the control for the Emergency stop command. • See DI1 above. -1 = DI1(INV) – Defines an inverted digital input DI1 as the control for the Emergency stop command. • De-activating the digital input issues an Emergency stop command. • Activating the digital input removes the Emergency stop command. -2…-6 = DI2(INV)…DI6(INV) – Defines an inverted digital input DI2…DI6 as the control for the Emergency stop command. • See DI1(INV) above.	**-6…6**
2110	**TORQ BOOST CURR** Sets the maximum supplied current during the torque boost. • See parameter 2101 START FUNCTION.	**0…300%**
2113	**START DELAY** Defines the Start delay. After the conditions for start have been fulfilled, the drive waits until the delay has elapsed and then starts the motor. Start delay can be used with all start modes. • If START DELAY = zero, the delay is disabled. • During the Start delay, alarm 2028 START DELAY is shown.	**0.00…60.00 s**

Group 22: ACCEL/DECEL

This group defines ramps that control the rate of acceleration and deceleration. You define these ramps as a pair, one for acceleration and one for deceleration. You can define two pairs of ramps and use a digital input to select one of these.

Code	Description	Range
2201	**ACC/DEC 1/2 SEL** Defines control for selection of acceleration/deceleration ramps. • Ramps are defined in pairs, with one ramp for acceleration and one ramp for deceleration. • See below for the ramp definition parameters. 0 = NOT SEL – Disables selection, the first ramp pair is used. 1 = DI1 – Defines digital input DI1 as the control for ramp pair selection. • Activating the digital input selects ramp pair 2. • De-activating the digital input selects ramp pair 1. 2…6 = DI2…DI6 – Defines digital input DI2…DI6 as the control for ramp pair selection. • See DI1 above. 7 = COMM – Defines bit 10 of Command Word 1 (parameter 0301) as the control for ramp pair selection. •The command word is supplied through fieldbus communication. -1 = DI1(INV) – Defines an inverted digital input DI1 as the control for ramp pair selection. • De-activating the digital input selects ramp pair 2. • Activating the digital input selects ramp pair 1. -2…-6 = DI2(INV)…DI6(INV) – Defines an inverted digital input DI2…DI6 as the control for ramp pair selection. • See DI1(INV) above.	**-6…6**
2202	**ACCELER TIME 1** Sets the acceleration time for zero to maximum frequency for ramp pair 1. See A in the figure for parameter 2204. • Actual acceleration time also depends on 2204 RAMP SHAPE 1. • See 2008 MAXIMUM FREQ.	**0.0…1800 s**
2203	**DECELER TIME 1** Sets the deceleration time for maximum frequency to zero for ramp pair 1. • Actual deceleration time also depends on 2204 RAMP SHAPE 1. • See 2008 MAXIMUM FREQ.	**0.0…1800 s**

Code	Description	Range
2204	**RAMP SHAPE 1** Selects the shape of the acceleration/deceleration ramp for ramp pair 1. See B in the figure. • Shape is defined as a ramp, unless additional time is specified here to reach the maximum frequency. A longer time provides a softer transition at each end of the slope. The shape becomes an s-curve. • Rule of thumb: 1/5 is a suitable relation between the ramp shape time and the acceleration ramp time. 0.0 = LINEAR – Specifies linear acceleration/deceleration ramps for ramp pair 1. 0.1…1000.0 – Specifies s-curve acceleration/deceleration ramps for ramp pair 1. 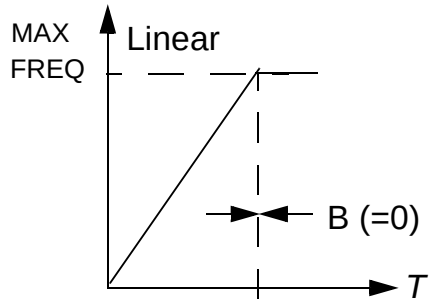 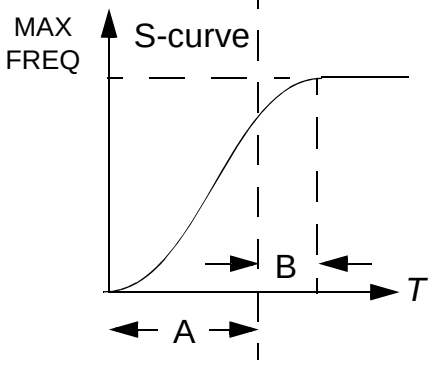 A = 2202 ACCELERATION TIME B = 2204 RAMP SHAPE	**0=LINEAR, 0.1…1000.0 s**
2205	**ACCELER TIME 2** Sets the acceleration time for zero to maximum frequency for ramp pair 2. • See 2202 ACCELER TIME 1.	**0.0…1800 s**
2206	**DECELER TIME 2** Sets the deceleration time for maximum frequency to zero for ramp pair 2. • See 2203 DECELER TIME 1.	**20.0…1800 s**
2207	**RAMP SHAPE 2** Selects the shape of the acceleration/deceleration ramp for ramp pair 2. • See 2204 RAMP SHAPE 1.	**0=LINEAR, 0.0…1000.0 s**
2208	**EMERG DEC TIME** Sets the deceleration time for maximum frequency to zero for an emergency. • See parameter 2109 EMERG STOP SEL. • Ramp is linear.	**0.0…1800 s**

Code	Description	Range
2209	**RAMP INPUT 0** Defines control for forcing the ramp input to 0. 0 = NOT SEL – Not selected. 1 = DI1 – Defines digital input DI1 as the control for forcing the ramp input to 0. • Activating the digital input forces ramp input to 0. Ramp output will ramp to 0 according to the currently used ramp time, after which it will stay at 0. • De-activating the digital input: ramp resumes normal operation. 2…6 = DI2…DI6 – Defines digital input DI2…DI6 as the control for forcing the ramp input to 0. • See DI1 above. 7 = COMM – Defines bit 13 of the Command Word 1 (parameter 0301) as the control for forcing the ramp input to 0. •The command word is supplied through fieldbus communication. -1 = DI1(INV) – Defines an inverted digital input DI1 as the control for forcing the ramp input to 0. • De-activating the digital input forces ramp input to 0. • Activating the digital input: ramp resumes normal operation. -2…-6 = DI2(INV)…DI6(INV) – Defines an inverted digital input DI2…DI6 as the control for forcing the ramp input to 0. • See DI1(INV) above.	**-6…7**

Group 23: SPEED CONTROL

This group defines variables used for speed control operation.

Code	Description	Range
2301	**PROP GAIN** Sets the relative gain for the speed controller. • Larger values may cause speed oscillation. • The figure shows the speed controller output after an error step (error remains constant). **Note:** You can use parameter 2305 AUTOTUNE RUN to automatically set the proportional gain. K_p = Gain = 1 T_I = Integration time = 0 T_D = Derivation time = 0 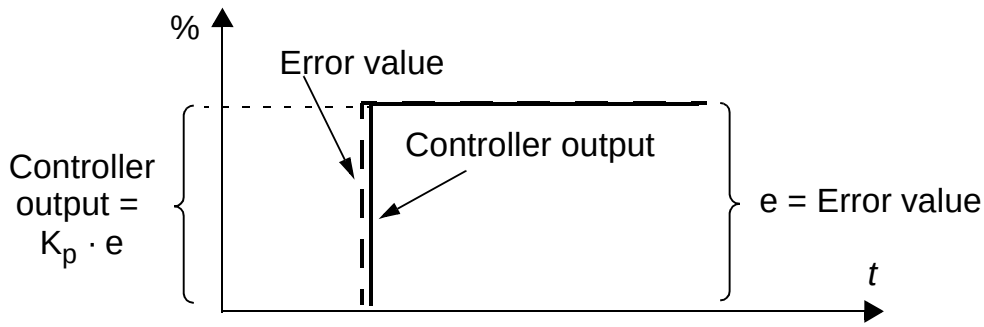 	**0.00…200.0**

8

Code	Description	Range
2302	**INTEGRATION TIME**	**0…600.00 s**

Sets the integration time for the speed controller.

- The integration time defines the rate at which the controller output changes for a constant error value.
- Shorter integration times correct continuous errors faster.
- Control becomes unstable if the integration time is too short.
- The figure shows the speed controller output after an error step (error remains constant).

Note: You can use parameter 2305 AUTOTUNE RUN to automatically set the integration time.

K_p = Gain = 1
T_I = Integration time > 0
T_D = Derivation time = 0

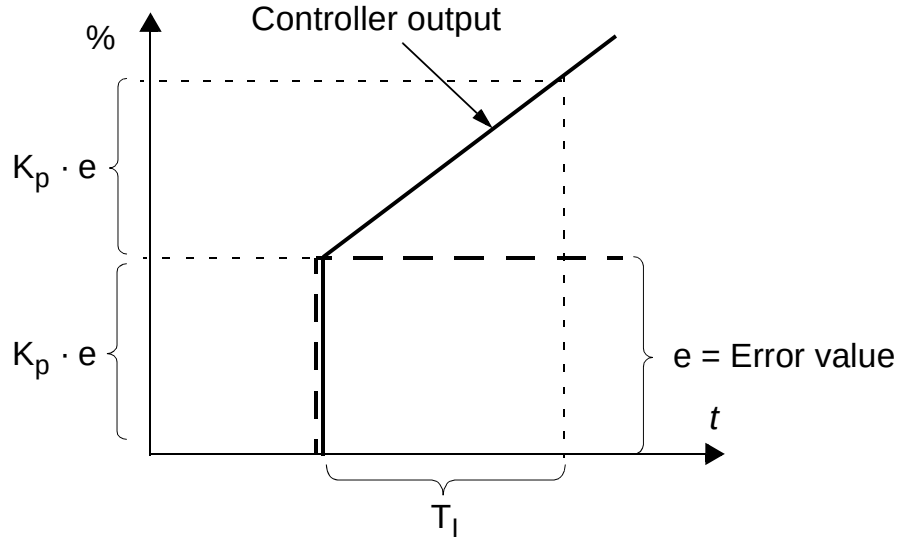

Code	Description	Range
2303	**DERIVATION TIME** Sets the derivation time for the speed controller. • Derivative action makes the control more responsive to error value changes. • The longer the derivation time, the more the speed controller output is boosted during the change. • If the derivation time is set to zero, the controller works as a PI controller, otherwise as a PID controller. The figure below shows the speed controller output after an error step when the error remains constant. K_p = Gain = 1 T_I = Integration time > 0 T_D = Derivation time > 0 T_s = Sample time period = 2 ms Δe = Error value change between two samples 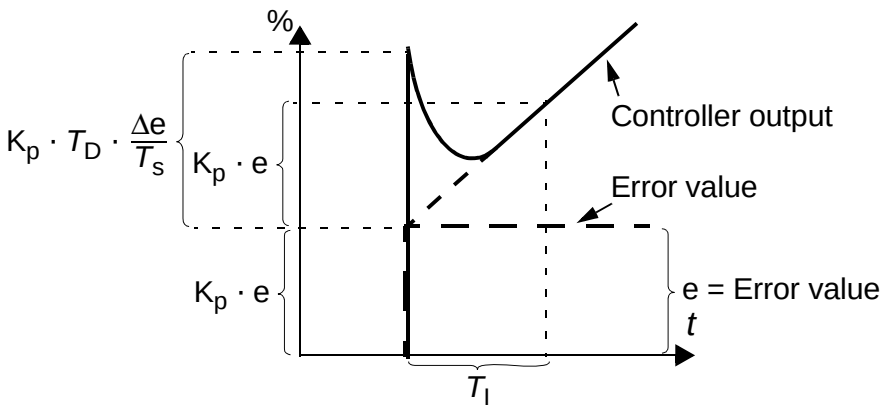	**0…10000 ms**

Code	Description	Range
2304	**ACC COMPENSATION** Sets the derivation time for acceleration compensation. • Adding a derivative of the reference to the output of the speed controller compensates for inertia during acceleration. • 2303 DERIVATION TIME describes the principle of the derivative action. • Rule of thumb: Set this parameter between 50 and 100% of the sum of the mechanical time constants for the motor and the driven machine. • The figure shows the speed responses when a high-inertia load is accelerated along a ramp. 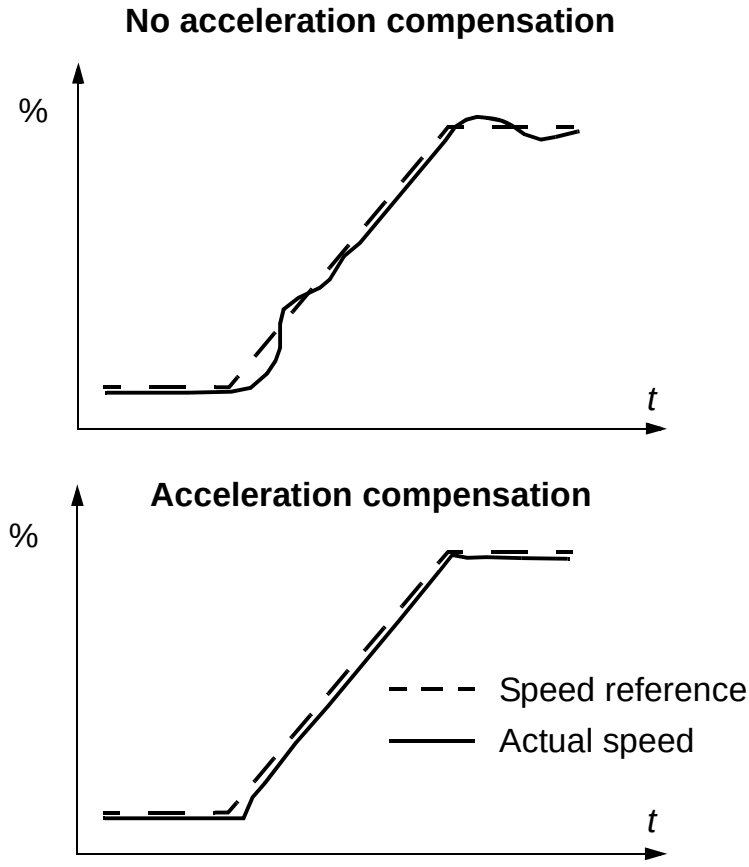 	**0…600.00 s**

Code	Description	Range
2305	**AUTOTUNE RUN** Starts automatic tuning of the speed controller. 0 = OFF – Disables the Autotune creation process. (Does not disable the operation of Autotune settings.) 1 = ON – Activates speed controller autotuning. Automatically reverts to OFF. **Procedure:** **Note:** The motor load must be connected. • Run the motor at a constant speed of 20 to 40% of the rated speed. • Change the autotuning parameter 2305 to ON. The drive: • Accelerates the motor. • Calculates values for proportional gain and integration time. • Changes parameters 2301 and 2302 to these values. • Resets 2305 to OFF.	**0=OFF, 1=ON**

Group 25: CRITICAL SPEEDS

This group defines up to three critical speeds or ranges of speeds that are to be avoided due, for example, to mechanical resonance problems at certain speeds.

Code	Description	Range
2501	**CRIT SPEED SEL** Sets the critical speeds function on or off. The critical speed function avoids specific speed ranges. 0 = OFF – Disables the critical speeds function. 1 = ON – Enables the critical speeds function. **Example**: To avoid speeds at which a fan system vibrates badly: • Determine problem speed ranges. Assume they are found to be 18…23 Hz and 46…52 Hz. • Set 2501 CRIT SPEED SEL = 1. • Set 2502 CRIT SPEED 1 LO = 18 Hz. • Set 2503 CRIT SPEED 1 HI = 23 Hz. • Set 2504 CRIT SPEED 2 LO = 46 Hz. • Set 2505 CRIT SPEED 2 HI = 52 Hz. 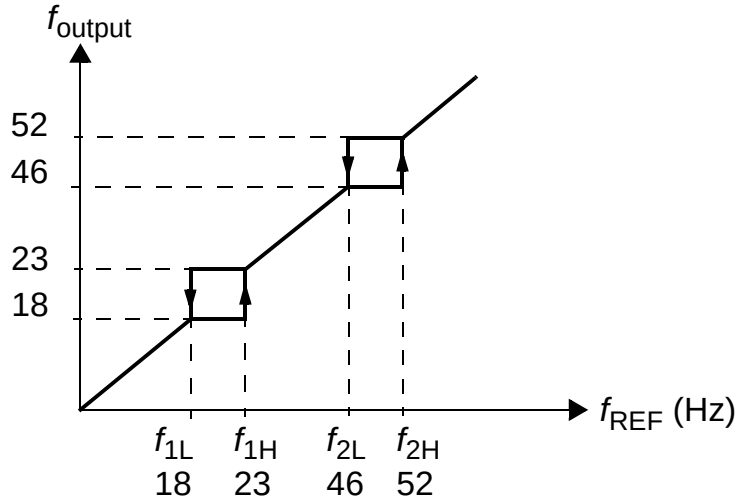	**0=OFF, 1=ON**
2502	**CRIT SPEED 1 LO** Sets the minimum limit for critical speed range 1. • The value must be less than or equal to 2503 CRIT SPEED 1 HI. • Units are rpm, unless 9904 MOTOR CTRL MODE = 3 (SCALAR:FREQ), in which case units are Hz.	**0…30000 rpm / 0…500 Hz**
2503	**CRIT SPEED 1 HI** Sets the maximum limit for critical speed range 1. • The value must be greater than or equal to 2502 CRIT SPEED 1 LO. • Units are rpm, unless 9904 MOTOR CTRL MODE = 3 (SCALAR:FREQ), in which case units are Hz.	**0…30000 rpm / 0…500 Hz**

Code	Description	Range
2504	**CRIT SPEED 2 LO** Sets the minimum limit for critical speed range 2. • See parameter 2502.	**0…30000 rpm / 0…500 Hz**
2505	**CRIT SPEED 2 HI** Sets the maximum limit for critical speed range 2. • See parameter 2503.	**0…30000 rpm / 0…500 Hz**
2506	**CRIT SPEED 3 LO** Sets the minimum limit for critical speed range 3. • See parameter 2502.	**0…30000 rpm / 0…500 Hz**
2507	**CRIT SPEED 3 HI** Sets the maximum limit for critical speed range 3. • See parameter 2503.	**0…30000 rpm / 0…500 Hz**

Group 26: MOTOR CONTROL

This group defines variables used for motor control.

Code	Description	Range
2601	**FLUX OPT ENABLE** Changes the magnitude of the flux depending on the actual load. Flux Optimization can reduce the total energy consumption and noise, and it should be enabled for drives that usually operate below nominal load. 0 = OFF – Disables the feature. 1 = ON – Enables the feature.	**0=OFF, 1=ON**
2602	**FLUX BRAKING** Provides faster deceleration by raising the level of magnetization in the motor when needed, instead of limiting the deceleration ramp. By increasing the flux in the motor, the energy of the mechanical system is changed to thermal energy in the motor. • The flux braking works in vector control mode only, i.e. when parameter 9904 MOTOR CTRL MODE = 1 (VECTOR:SPEED). 0 = OFF – Disables the feature. 1 = ON – Enables the feature. 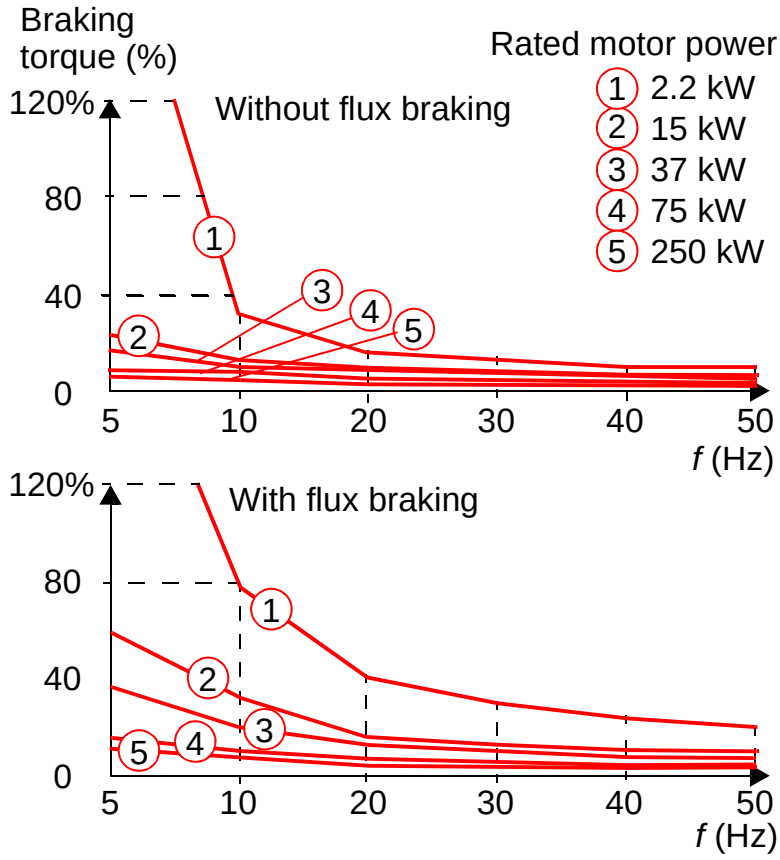 	**0=OFF, 1=ON**

<table>
<tr><th>Code</th><th>Description</th><th>Range</th></tr>
<tr><td>2603</td><td>IR COMP VOLT</td><td>0…100 V</td></tr>
<tr><td></td><td colspan="2">Sets the IR compensation voltage used for 0 Hz.
• Requires parameter 9904 MOTOR CTRL MODE = 3 (SCALAR:FREQ).
• Keep IR compensation as low as possible to prevent overheating.
• Typical IR compensation values are:
<table>
<tr><th colspan="6">380…480 V drives</th></tr>
<tr><td>P_N (kW)</td><td>3</td><td>7.5</td><td>15</td><td>37</td><td>132</td></tr>
<tr><td>IR comp (V)</td><td>21</td><td>18</td><td>15</td><td>10</td><td>4</td></tr>
</table>
• When enabled, IR compensation provides an extra voltage boost to the motor at low speeds. Use IR compensation, for example, in applications that require a high breakaway torque.
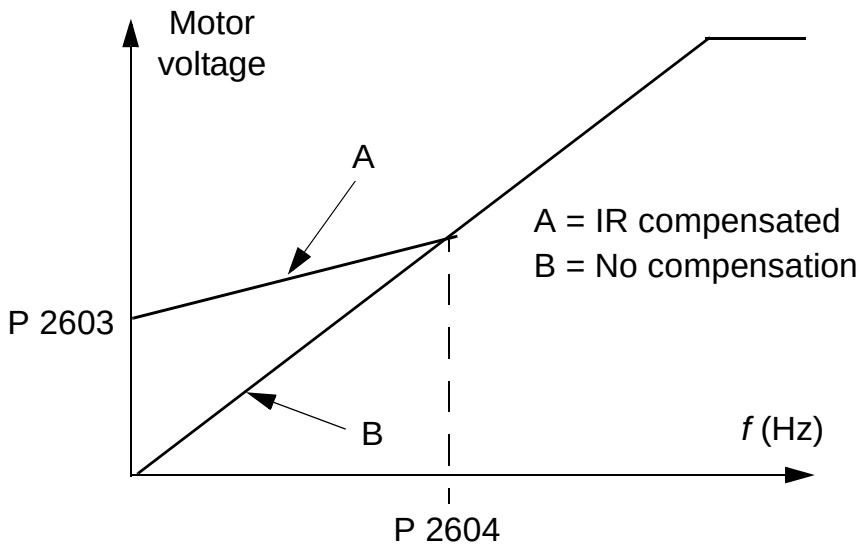
</td></tr>
<tr><td>2604</td><td>IR COMP FREQ</td><td>0…100%</td></tr>
<tr><td></td><td colspan="2">Sets the frequency at which IR compensation is 0 V (in % of motor frequency).</td></tr>
<tr><td>2605</td><td>U/F RATIO</td><td>1=LINEAR, 2=SQUARED</td></tr>
<tr><td></td><td colspan="2">Selects the form for the U/f (voltage to frequency) ratio below field weakening point.
1 = LINEAR – Preferred for constant torque applications.
2 = SQUARED – Preferred for centrifugal pump and fan applications. (SQUARED is more silent for most operating frequencies.)</td></tr>
</table>

Code	Description	Range
2606	**SWITCHING FREQ**	**1, 4, 8, 12 kHz**

Sets the switching frequency for the drive.
- Higher switching frequencies mean less noise.
- Available switching frequencies according to the drive power:

Power (kW)	1 kHz	4 kHz	8 kHz	12 kHz
0.75…37	x	x	x	x
45…110	x	x	x	-
132	x	x	-	-

2607 SWITCH FREQ CTRL — **0=OFF, 1=ON**

Activates the switching frequency control. When active, the selection of parameter 2606 SWITCHING FREQ is limited when the drive internal temperature increases. See the figure below. This function allows the highest possible switching frequency at a specific operating point. Higher switching frequency results in lower acoustic noise.
0 = OFF – The function is disabled.
1 = ON – The switching frequency is limited according to the figure.

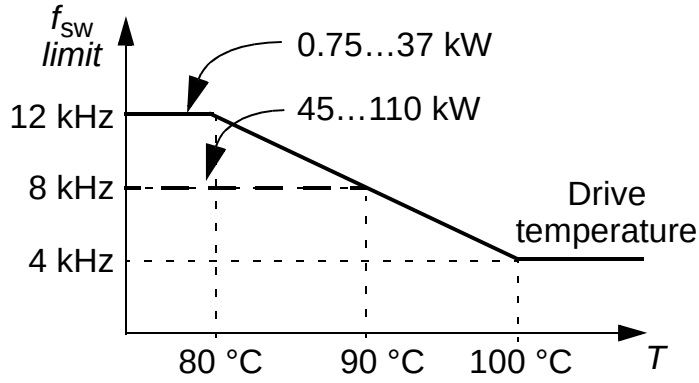

2608 SLIP COMP RATIO — **0…200%**

Sets gain for slip compensation (in %).
- A squirrel-cage motor slips under load. Increasing the frequency as the motor torque increases compensates for the slip.
- Requires parameter 9904 MOTOR CTRL MODE = 3 (SCALAR:FREQ).

0 – No slip compensation.
1…200 – Increasing slip compensation. 100% means full slip compensation.

Code	Description	Range
2609	**NOISE SMOOTHING** This parameter introduces a random component to the switching frequency. Noise smoothing distributes the acoustic motor noise over a range of frequencies instead of a single tonal frequency resulting in lower peak noise intensity. The random component has an average of 0 Hz. It is added to the switching frequency set by parameter 2606 SWITCHING FREQ. This parameter has no effect if parameter 2606 = 12 kHz. 0 = DISABLE 1 = ENABLE.	**0=DISABLE, 1=ENABLE**
2619	**DC STABILIZER** Enables or disables the DC voltage stabilizer. The DC stabilizer is used in scalar control mode to prevent possible voltage oscillations in the drive DC bus caused by motor load or weak supply network. In case of voltage variation the drive tunes the frequency reference to stabilize the DC bus voltage and therefore the load torque oscillation. 0 = DISABLE – Disables DC stabilizer. 1 = ENABLE – Enables DC stabilizer.	**0=DISABLE, 1=ENABLE**

Group 29: MAINTENANCE TRIG

This group defines usage levels and trigger points. When usage reaches the set trigger point, a notice displayed on the control panel (operator keypad) signals that maintenance is due.

Code	Description	Range
2901	**COOLING FAN TRIG** Sets the trigger point for the drive's cooling fan counter. • Value is compared to parameter 2902 value. 0.0 – Disables the trigger.	**0.0…6553.5 kh**
2902	**COOLING FAN ACT** Defines the actual value of the drive's cooling fan counter. • When parameter 2901 has been set to a non-zero value, the counter starts. • When the actual value of the counter exceeds the value defined by parameter 2901, a maintenance notice is displayed on the panel. 0.0 – Resets the parameter.	**0.0…6553.5 kh**
2903	**REVOLUTION TRIG** Sets the trigger point for the motor's accumulated revolutions counter. • Value is compared to parameter 2904 value. 0 – Disables the trigger.	**0…65535 Mrev**
2904	**REVOLUTION ACT** Defines the actual value of the motor's accumulated revolutions counter. • When parameter 2903 has been set to a non-zero value, the counter starts. • When the actual value of the counter exceeds the value defined by parameter 2903, a maintenance notice is displayed on the panel. 0 – Resets the parameter.	**0…6553 Mrev**
2905	**RUN TIME TRIG** Sets the trigger point for the drive's run time counter. • Value is compared to parameter 2906 value. 0.0 – Disables the trigger.	**0.0…6553.5 kh**
2906	**RUN TIME ACT** • When parameter 2905 has been set to a non-zero value, the counter starts. • When the actual value of the counter exceeds the value defined by parameter 2905, a maintenance notice is displayed on the panel. Defines the actual value of the drive's run time counter. 0.0 – Resets the parameter.	**0.0…6553.5 kh**

Code	Description	Range
2907	**USER MWh TRIG** Sets the trigger point for the drive's accumulated power consumption (in megawatt hours) counter. • Value is compared to parameter 2908 value. 0.0 – Disables the trigger.	**0.0…6553.5 MWh**
2908	**USER MWh ACT** Defines the actual value of the drive's accumulated power consumption (in megawatt hours) counter. • When parameter 2907 has been set to a non-zero value, the counter starts. • When the actual value of the counter exceeds the value defined by parameter 2907, a maintenance notice is displayed on the panel. 0.0 – Resets the parameter.	**0.0…6553.5 MWh**

Group 30: FAULT FUNCTIONS

This group defines situations that the drive should recognize as potential faults and how the drive should respond if the fault is detected.

Code	Description	Range
3001	**AI<MIN FUNCTION**	**0…3**
	Defines the drive response if the analogue input (AI) signal drops below the fault limits and AI is used in the reference chain. • 3021 AI1 FAULT LIMIT and 3022 AI2 FAULT LIMIT set the minimum limits 0 = NOT SEL – No response. 1 = FAULT – Displays a fault (7, AI1 LOSS or 8, AI2 LOSS) and the drive coasts to stop. 2 = CONST SP 7 – Displays an alarm (2006, AI1 LOSS or 2007, AI2 LOSS) and sets the speed using 1208 CONST SPEED 7. 3 = LAST SPEED – Displays an alarm (2006, AI1 LOSS or 2007, AI2 LOSS) and sets the speed using the last operating level. This value is the average speed over the last 10 seconds. ⚠ **WARNING!** If you select CONST SP 7 or LAST SPEED, make sure that continued operation is safe when the analogue input signal is lost.	
3002	**PANEL COMM ERR**	**1…3**
	Defines the drive response to a control panel (operator keypad) communication error. 1 = FAULT – Displays a fault (10, PANEL LOSS) and the drive coasts to stop. 2 = CONST SP 7 – Displays an alarm (2008, PANEL LOSS) and sets the speed using 1208 CONST SPEED 7. 3 = LAST SPEED – Displays an alarm (2008, PANEL LOSS) and sets the speed using the last operating level. This value is the average speed over the last 10 seconds. ⚠ **WARNING!** If you select CONST SP 7 or LAST SPEED, make sure that continued operation is safe when the control panel communication is lost.	

Code	Description	Range
3003	**EXTERNAL FAULT 1** Defines the External Fault 1 signal input and the drive response to an external fault. 0 = NOT SEL – External fault signal is not used. 1 = DI1 – Defines digital input DI1 as the external fault input. • Activating the digital input indicates a fault. The drive displays a fault (14, EXT FAULT 1) and the drive coasts to stop. 2…6 = DI2…DI6 – Defines digital input DI2…DI6 as the external fault input. • See DI1 above. -1 = DI1(INV) – Defines an inverted digital input DI1 as the external fault input. • De-activating the digital input indicates a fault. The drive displays a fault (14, EXT FAULT 1) and the drive coasts to stop. -2…-6 = DI2(INV)…DI6(INV) – Defines an inverted digital input DI2…DI6 as the external fault input. • See DI1(INV) above.	**-6…6**
3004	**EXTERNAL FAULT 2** Defines the External Fault 2 signal input and the drive response to an external fault. • See parameter 3003 above.	**-6…6**
3005	**MOT THERM PROT** Defines the drive response to motor overheating. 0 = NOT SEL – No response and/or motor thermal protection not set up. 1 = FAULT – Displays an alarm (2010, MOTOR TEMP) when the calculated motor temperature exceeds 90 °C. Displays a fault (9, MOT OVERTEMP) and the drive coasts to stop when the calculated motor temperature exceeds 110 °C. 2 = ALARM – Displays an alarm (2010, MOTOR TEMP) when the calculated motor temperature exceeds 90 °C.	**0…2**

Code	Description	Range
3006	**MOT THERM TIME**	**256…9999 s**
	Sets the motor thermal time constant for the motor temperature model. • This is the time required for the motor to reach 63% of the final temperature with steady load. • For thermal protection according to UL requirements for NEMA class motors, use the rule of thumb: MOTOR THERM TIME equals 35 times t6, where t6 (in seconds) is specified by the motor manufacturer as the time that the motor can safely operate at six times its rated current. • The thermal time for a Class 10 trip curve is 350 s, for a Class 20 trip curve 700 s, and for a Class 30 trip curve 1050 s. 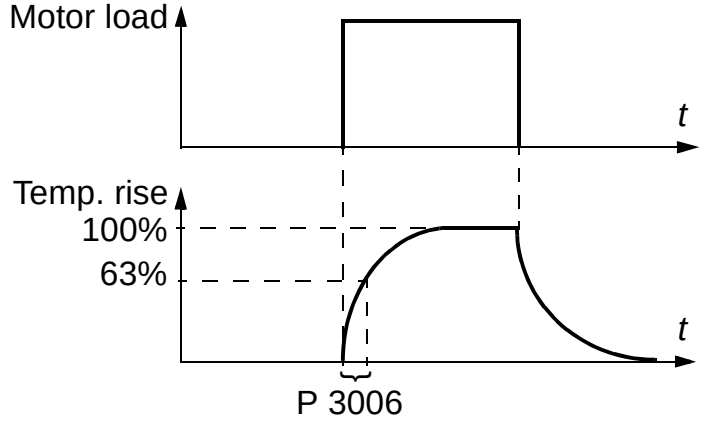 	
3007	**MOT LOAD CURVE**	**50…150%**
	Sets the maximum allowable operating load of the motor. • When set to 100%, the maximum allowable load is equal to the value of Start-up Data parameter 9906 MOTOR NOM CURR. • Adjust the load curve level if the ambient temperature differs from nominal. 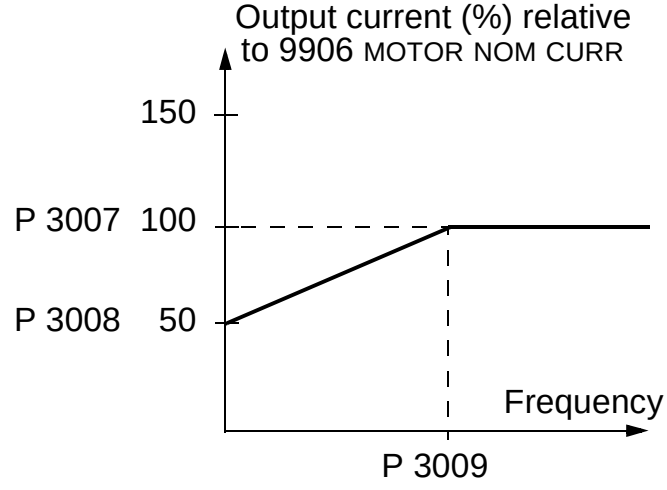 	
3008	**ZERO SPEED LOAD**	**25…150%**
	Sets the maximum allowable current at zero speed. • Value is relative to 9906 MOTOR NOM CURR.	

Code	Description	Range
3009	**BREAK POINT FREQ** Sets the break point frequency for the motor load curve. **Example:** Thermal protection trip times when parameters 3006 MOT THERM TIME, 3007 MOT LOAD CURVE and 3008 ZERO SPEED LOAD have default values.	**1…250 Hz**

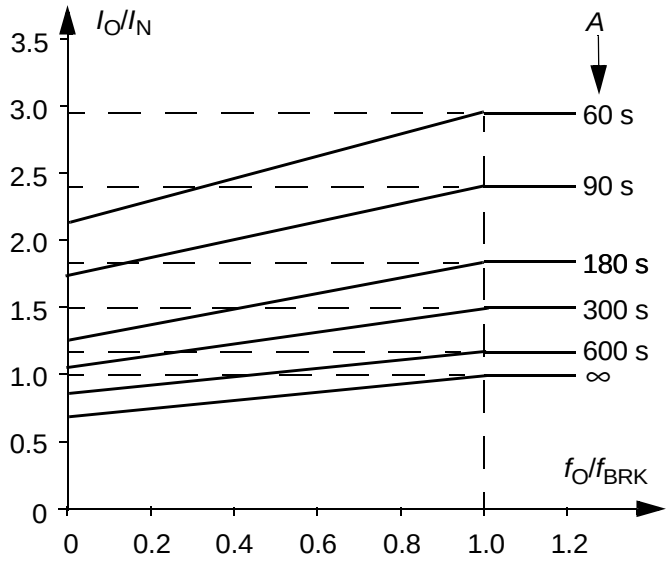

I_O = Output current
I_N = Nominal motor current
f_O = Output frequency
f_{BRK} = Break point frequency
A = Trip time

Code	Description	Range
3010	**STALL FUNCTION** This parameter defines the operation of the Stall function. This protection is active if the drive operates in the stall region (see the figure) for the time defined by 3012 STALL TIME. The “User limit” is defined in scalar mode by 2003 MAX CURRENT in *Group 20: LIMITS*, and in vector mode by 2017 MAX TORQUE 1 and 2018 MAX TORQUE 2, or the limit on the COMM input. 0 = NOT SEL – Stall protection is not used. 1 = FAULT – When the drive operates in the stall region for the time set by 3012 STALL TIME: • The drive coasts to stop. • A fault indication is displayed. 2 = ALARM – When the drive operates in the stall region for the time set by 3012 STALL TIME: • An alarm indication is displayed. • The alarm disappears when the drive is out of the stall region for half the time set by parameter 3012 STALL TIME. 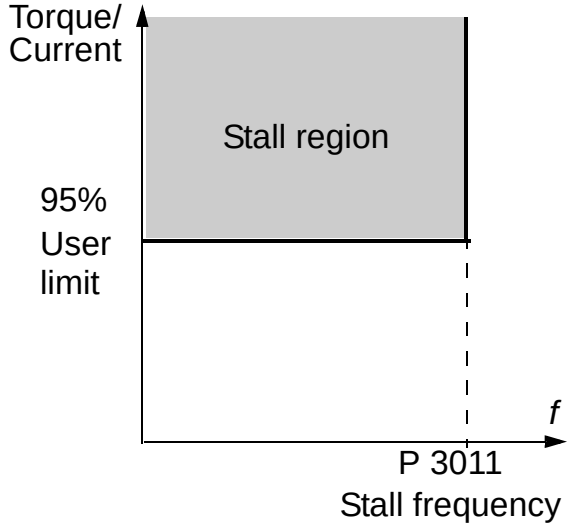 	**0…2**
3011	**STALL FREQUENCY** This parameter sets the frequency value for the Stall function. See the figure for parameter 3010.	**0.5…50 Hz**
3012	**STALL TIME** This parameter sets the time value for the Stall function.	**10…400 s**
3017	**EARTH FAULT** Defines the drive response if the drive detects a ground fault in the motor or motor cables. 0 = DISABLE – No response 1 = ENABLE – Displays a fault (16, EARTH FAULT) and the drive coasts to stop.	**0=DISABLE, 1=ENABLE**

Code	Description	Range
3018	**COMM FAULT FUNC** Defines the drive response if the fieldbus communication is lost. 0 = NOT SEL – No response 1 = FAULT – Displays a fault (28, SERIAL 1 ERR) and the drive coasts to stop. 2 = CONST SP 7 – Displays an alarm (2005, IO COMM) and sets the speed using 1208 CONST SPEED 7. This “alarm speed” remains active until the fieldbus writes a new reference value. 3 = LAST SPEED – Displays an alarm (2005, IO COMM) and sets the speed using the last operating level. This value is the average speed over the last 10 seconds. This “alarm speed” remains active until the fieldbus writes a new reference value. **WARNING!** If you select CONST SP7, or LAST SPEED, make sure that continued operation is safe when the fieldbus communication is lost.	**0…3**
3019	**COMM FAULT TIME** Sets the communication fault time used with 3018 COMM FAULT FUNC. • Brief interruptions in the fieldbus communication are not treated as faults if they are less than the COMM FAULT TIME value.	**0…60.0 s**
3021	**AI1 FAULT LIMIT** Sets a fault level for analogue input 1. See 3001 AI<MIN FUNCTION.	**0…100%**
3022	**AI2 FAULT LIMIT** Sets a fault level for analogue input 2. See 3001 AI<MIN FUNCTION.	**0…100%**
3023	**WIRING FAULT** Defines the drive response to cross wiring faults and to ground faults detected when the drive is NOT running. When the drive is not running, it monitors for: • Improper connections of input power to the drive output (the drive can display fault 35, OUTP WIRING if improper connections are detected). • Ground faults (the drive can display fault 16, EARTH FAULT if a ground fault is detected). Also, see parameter 3017 EARTH FAULT. 0 = DISABLE – No response to either of the above monitoring results. 1 = ENABLE – Displays a fault when this monitoring detects problems.	**0=DISABLE, 1=ENABLE**
3024	**CB TEMP FAULT** Defines the drive response to control board overheating. Not for drives with an OMIO control board. 0 = DISABLE – No response 1 = ENABLE – Displays a fault (37, CB OVERTEMP) and the drive coasts to stop.	**0=DISABLE, 1=ENABLE**

Group 31: AUTOMATIC RESET

This group defines conditions for automatic resets. An automatic reset occurs after a particular fault is detected. The drive holds for a set delay time and then restarts automatically. You can limit the number of resets in a specified time period, and you can set up automatic resets for a variety of faults.

Code	Description	Range
3101	**NUMBER OF TRIALS** Sets the number of allowed automatic resets within a trial period defined by 3102 TRIAL TIME. • If the number of automatic resets exceeds this limit (within the trial time), the drive prevents additional automatic resets and remains stopped. • Starting then requires a successful reset performed from the control panel (operator keypad) or from a source selected by 1604 FAULT RESET SEL. **Example:** Three faults have occurred in the trial time. The last is reset only if the value for 3101 NUMBER OF TRIALS is 3 or more. 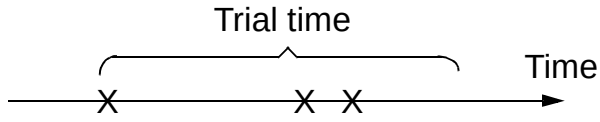 	**0…5**
3102	**TRIAL TIME** Sets the time period used for counting and limiting the number of resets. • See 3101 NUMBER OF TRIALS.	**1.0…600.0 s**
3103	**DELAY TIME** Sets the delay time between a fault detection and attempted drive restart. • If DELAY TIME = zero, the drive resets immediately.	**0.0…120.0 s**
3104	**AR OVERCURRENT** Sets the automatic reset for the overcurrent function on or off. 0 = DISABLE – Disables automatic reset. 1 = ENABLE – Enables automatic reset. • Automatically resets the fault (OVERCURRENT) after the delay set by 3103 DELAY TIME, and the drive resumes normal operation.	**0=DISABLE, 1=ENABLE**

Code	Description	Range
3105	**AR OVERVOLTAGE** Sets the automatic reset for the overvoltage function on or off. 0 = DISABLE – Disables automatic reset. 1 = ENABLE – Enables automatic reset. • Automatically resets the fault (DC OVERVOLT) after the delay set by 3103 DELAY TIME, and the drive resumes normal operation.	**0=DISABLE, 1=ENABLE**
3106	**AR UNDERVOLTAGE** Sets the automatic reset for the undervoltage function on or off. 0 = DISABLE – Disables automatic reset. 1 = ENABLE – Enables automatic reset. • Automatically resets the fault (DC UNDERVOLT) after the delay set by 3103 DELAY TIME, and the drive resumes normal operation.	**0=DISABLE, 1=ENABLE**
3107	**AR AI<MIN** Sets the automatic reset for the analogue input less than the minimum value function on or off. 0 = DISABLE – Disables automatic reset. 1 = ENABLE – Enables automatic reset. • Automatically resets the fault (AI<MIN) after the delay set by 3103 DELAY TIME, and the drive resumes normal operation. **WARNING!** When the analogue input signal is restored, the drive may restart, even after a long stop. Make sure that automatic, long delayed starts will not cause physical injury and/or damage equipment.	**0=DISABLE, 1=ENABLE**
3108	**AR EXTERNAL FLT** Sets the automatic reset for external faults function on or off. 0 = DISABLE – Disables automatic reset. 1 = ENABLE – Enables automatic reset. • Automatically resets the fault (EXT FAULT 1 or EXT FAULT 2) after the delay set by 3103 DELAY TIME, and the drive resumes normal operation.	**0=DISABLE, 1=ENABLE**

Group 32: SUPERVISION

This group defines supervision for up to three signals from *Group 01: OPERATING DATA*. Supervision monitors a specified parameter and energizes a relay output if the parameter passes a defined limit. Use *Group 14: RELAY OUTPUTS* to define the relay and whether the relay activates when the signal is too low or too high.

Code	Description	Range
3201	**SUPERV 1 PARAM** Selects the first supervised parameter. • Must be a parameter number from *Group 01: OPERATING DATA*. • 101…159 – Supervises parameter 0101…0159. • If the supervised parameter passes a limit, a relay output is energized. • The supervision limits are defined in this group. • The relay outputs are defined in *Group 14: RELAY OUTPUTS* (definition also specifies which supervision limit is monitored). **LO ≤ HI** Operating data supervision using relay outputs, when LO ≤ HI. See the figure on page *241*. • Case A = Parameter 1401 RELAY OUTPUT 1 (or 1402 RELAY OUTPUT 2, etc.) value is SUPRV1 OVER or SUPRV2 OVER. Use for monitoring when/if the supervised signal exceeds a given limit. The relay remains active until the supervised value drops below the low limit. • Case B = Parameter 1401 RELAY OUTPUT 1 (or 1402 RELAY OUTPUT 2, etc.) value is SUPRV1 UNDER or SUPRV2 UNDER. Use for monitoring when/if the supervised signal falls below a given limit. The relay remains active until the supervised value rises above the high limit. **LO > HI** Operating data supervision using relay outputs, when LO>HI. See the figure on page *241*. The lowest limit (HI 3203) is active initially, and remains active until the supervised parameter goes above the highest limit (LO 3202), making that limit the active limit. That limit remains active until the supervised parameter goes below the lowest limit (HI 3203), making that limit active. • Case A = Parameter 1401 RELAY OUTPUT 1 (or 1402 RELAY OUTPUT 2, etc.) value is SUPRV1 OVER or SUPRV2 OVER. Initially the relay is de-energized. It is energized whenever the supervised parameter goes above the active limit. • Case B = Parameter 1401 RELAY OUTPUT 1 (or 1402 RELAY OUTPUT 2, etc.) value is SUPRV1 UNDER or SUPRV2 UNDER. Initially the relay is energized. It is de-energized whenever the supervised parameter goes below the active limit.	**101…159**

Code	Description	Range
	LO ≤ HI **Note:** Case LO ≤ HI represents a normal hysteresis. 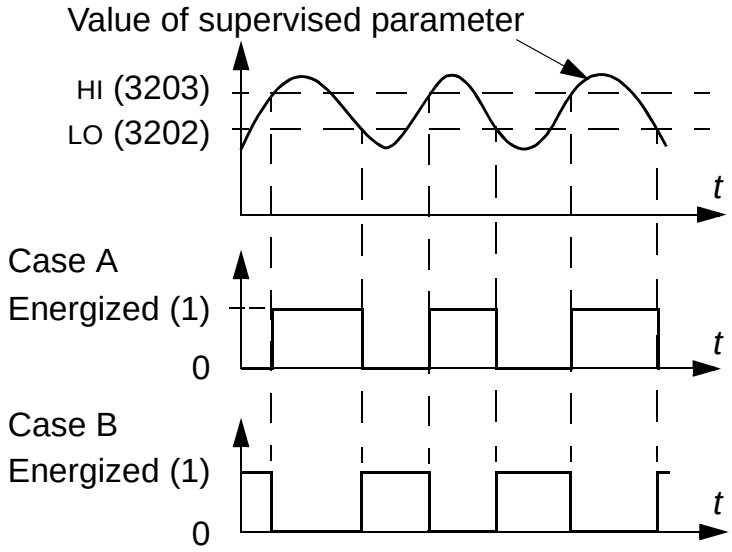 **LO > HI** **Note:** Case LO>HI represents a special hysteresis with two separate supervision limits. 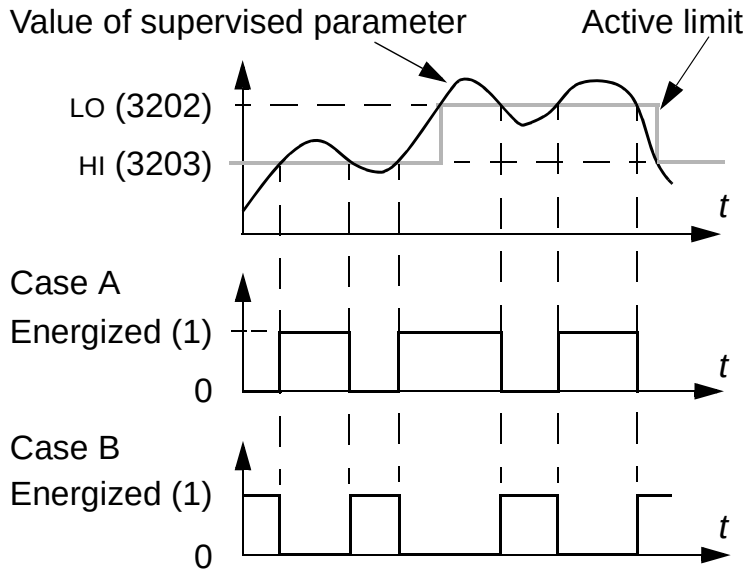 	
3202	**SUPERV 1 LIM LO** Sets the low limit for the first supervised parameter. See 3201 SUPERV 1 PARAM above.	-
3203	**SUPERV 1 LIM HI** Sets the high limit for the first supervised parameter. See 3201 SUPERV 1 PARAM above.	-

Code	Description	Range
3204	**SUPERV 2 PARAM** Selects the second supervised parameter. See 3201 SUPERV 1 PARAM above.	**101…159**
3205	**SUPERV 2 LIM LO** Sets the low limit for the second supervised parameter. See 3204 SUPERV 2 PARAM above.	**-**
3206	**SUPERV 2 LIM HI** Sets the high limit for the second supervised parameter. See 3204 SUPERV 2 PARAM above.	**-**
3207	**SUPERV 3 PARAM** Selects the third supervised parameter. See 3201 SUPERV 1 PARAM above.	**101…159**
3208	**SUPERV 3 LIM LO** Sets the low limit for the second supervised parameter. See 3207 SUPERV 3 PARAM above.	**-**
3209	**SUPERV 3 LIM HI** Sets the high limit for the third supervised parameter. See 3207 SUPERV 3 PARAM above.	**-**

Group 33: INFORMATION

This group provides access to information about the drive's current programs: versions and test date.

Code	Description	Range
3301	**FIRMWARE** Contains the version of the drive's firmware.	**0000…FFFF hex**
3302	**LOADING PACKAGE** Contains the version of the loading package.	**0000…FFFF hex**
3303	**TEST DATE** Contains the test date (yy.ww).	**yy.ww**
3304	**DRIVE RATING** Indicates the drive's current and voltage rating. The format is XXXY, where: • XXX = The nominal current rating of the drive in amperes. If present, an "A" indicates a decimal point in the rating for the current. For example XXX = 8A8 indicates a nominal current rating of 8.8 A. • Y = The voltage rating of the drive, where Y = 2 indicates a 208…240 V rating, and Y = 4 indicates a 380…480 V rating.	**XXXY**
3305	**PARAMETER TABLE** Contains the version of the parameter table used in the drive.	**0000…FFFF hex**

Group 34: PANEL DISPLAY

This group defines the content for control panel (operator keypad) display (centre area) when the control panel is in the Output mode.

Code	Description	Range
3401	**SIGNAL1 PARAM**	**100…159**

Selects the first parameter (by number) displayed on the control panel.

- Definitions in this group define the display content when the control panel is in the control mode.
- Any *Group 01: OPERATING DATA* parameter number can be selected.
- Using the following parameters, the display value can be scaled, converted to convenient units, and/or displayed as a bar graph.
- The figure identifies selections made by parameters in this group.

100 = NOT SELECTED – First parameter not displayed.

101…159 – Displays parameter 0101…0159. If parameter does not exist, the display shows “n.a.”.

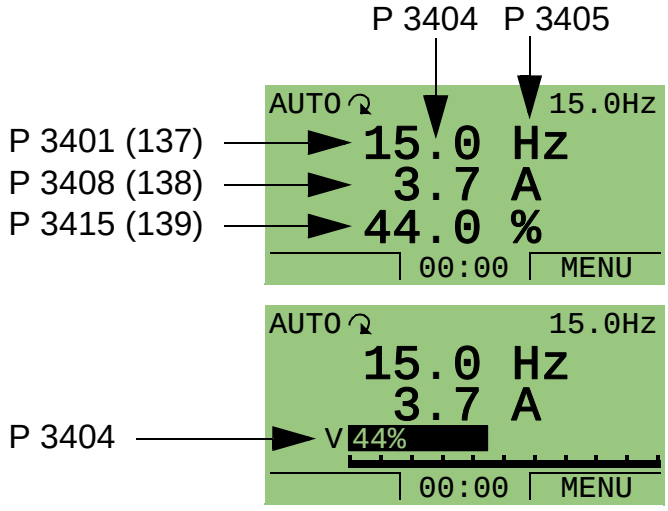

Code	Description	Range
3402	**SIGNAL1 MIN** Defines the minimum expected value for the first display parameter. • Use parameters 3402, 3403, 3406, and 3407, for example to convert a group 01 parameter, such as 0102 SPEED (in rpm) to the speed of a conveyor driven by the motor (in ft/min). For such a conversion, the source values in the figure are the min. and max. motor speed, and the display values are the corresponding min. and max. conveyor speed. • Use parameter 3405 to select the proper units for the display. **Note:** Selecting units does not convert values. Parameter is not effective if parameter 3404 OUTPUT1 DSP FORM = 9 (DIRECT). 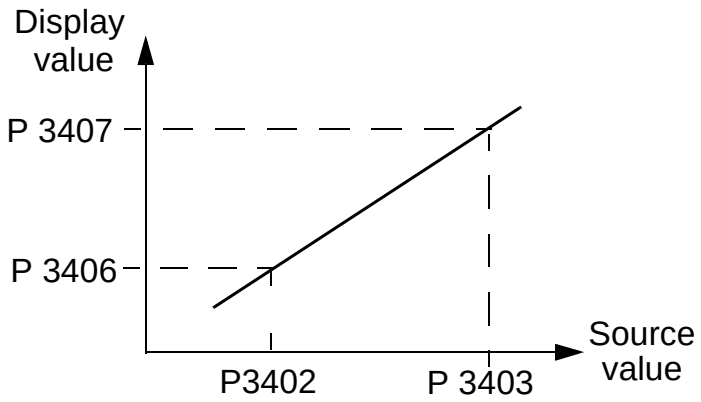 	-
3403	**SIGNAL1 MAX** Defines the maximum expected value for the first display parameter. **Note:** Parameter is not effective if parameter 3404 OUTPUT1 DSP FORM = 9 (DIRECT).	-

Code	Description	Range
3404	**OUTPUT1 DSP FORM**	**0…9**

Defines the decimal point location for the first display parameter.
- Enter the number of digits desired to the right of the decimal point.
- See the table for an example using pi (3.14159).

3404 Value	Display	Range
0	± 3	-32768…+32767 (Signed)
1	± 3.1	
2	± 3.14	
3	± 3.142	
4	3	0…65535 (Unsigned)
5	3.1	
6	3.14	
7	3.142	
8	Bar meter displayed.	
9	Direct value. Decimal point location and units of measure are identical to the source signal. **Note:** Parameters 3402, 3403 and 3405…3407 are not effective.	

3405	**OUTPUT1 UNIT**	**0…127**

Selects the units used for the first display parameter.

Note: Parameter is not effective if parameter 3404 OUTPUT1 DSP FORM = 9 (DIRECT).

0 = NO UNIT	9 = °C	18 = MWh	27 = ft	36 = l/s	45 = Pa	54 = lb/m	63 = Mrev
1 = A	10 = lb ft	19 = m/s	28 = MGD	37 = l/min	46 = GPS	55 = lb/h	64 = d
2 = V	11 = mA	20 = m^3/h	29 = inHg	38 = l/h	47 = gal/s	56 = FPS	65 = inWC
3 = Hz	12 = mV	21 = dm^3/s	30 = FPM	39 = m^3/s	48 = gal/m	57 = ft/s	66 = m/min
4 = %	13 = kW	22 = bar	31 = kb/s	40 = m^3/m	49 = gal/h	58 = inH_2O	67 = Nm
5 = s	14 = W	23 = kPa	32 = kHz	41 = kg/s	50 = ft^3/s	59 = in wg	
6 = h	15 = kWh	24 = GPM	33 = ohm	42 = kg/m	51 = ft^3/m	60 = ft wg	
7 = rpm	16 = °F	25 = PSI	34 = ppm	43 = kg/h	52 = ft^3/h	61 = lbsi	
8 = kh	17 = hp	26 = CFM	35 = pps	44 = mbar	53 = lb/s	62 = ms	

The following units are useful for the bar display

117 = %ref	118 = %act	119 = %dev	120 = % LD	121 =% SP	122 = %FBK	123 = Iout	124 = Vout
125 = Fout	126 = Tout	127 = Vdc					

3406	**OUTPUT1 MIN**	**-**

Sets the maximum value displayed for the first display parameter.

Note: Parameter is not effective if parameter 3404 OUTPUT1 DSP FORM = 9 (DIRECT).

Code	Description	Range
3407	**OUTPUT1 MAX** Sets the maximum value displayed for the first display parameter. **Note:** Parameter is not effective if parameter 3404 OUTPUT1 DSP FORM = 9 (DIRECT).	**-**
3408	**SIGNAL2 PARAM** Selects the second parameter (by number) displayed on the control panel. • See parameter 3401.	**100…159**
3409	**SIGNAL2 MIN** Defines the minimum expected value for the second display parameter. • See parameter 3402.	**-**
3410	**SIGNAL2 MAX** Defines the maximum expected value for the second display parameter. • See parameter 3403.	**-**
3411	**OUTPUT2 DSP FORM** Defines the decimal point location for the second display parameter. • See parameter 3404.	**0…9**
3412	**OUTPUT2 UNIT** Selects the units used for the second display parameter. • See parameter 3405.	**0…127**
3413	**OUTPUT2 MIN** Sets the minimum value displayed for the second display parameter. • See parameter 3406.	**-**
3414	**OUTPUT2 MAX** Sets the maximum value displayed for the second display parameter. • See parameter 3407.	**-**
3415	**SIGNAL3 PARAM** Selects the third parameter (by number) displayed on the control panel. • See parameter 3401.	**100…159**
3416	**SSIGNAL3 MIN** • Defines the minimum expected value for the third display parameter. See parameter 3402.	**-**
3417	**SIGNAL3 MAX** Defines the maximum expected value for the third display parameter. • See parameter 3403.	**-**
3418	**OUTPUT3 DSP FORM** Defines the decimal point location for the third display parameter. • See parameter 3404.	**0…9**

Code	Description	Range
3419	**OUTPUT3 UNIT** Selects the units used for the third display parameter. • See parameter 3405.	**0…127**
3420	**OUTPUT3 MIN** Sets the minimum value displayed for the third display parameter. • See parameter 3406.	**-**
3421	**OUTPUT3 MAX** Sets the maximum value displayed for the third display parameter. • See parameter 3407.	**-**

Group 35: MOTOR TEMP MEAS

This group defines the detection and reporting for a particular potential fault – motor overheating, as detected by a temperature sensor. Typical connections are shown below.

One sensor

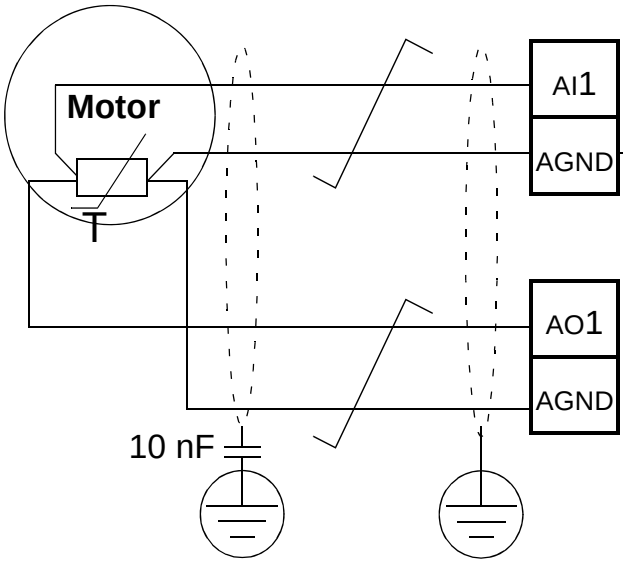

Three sensors

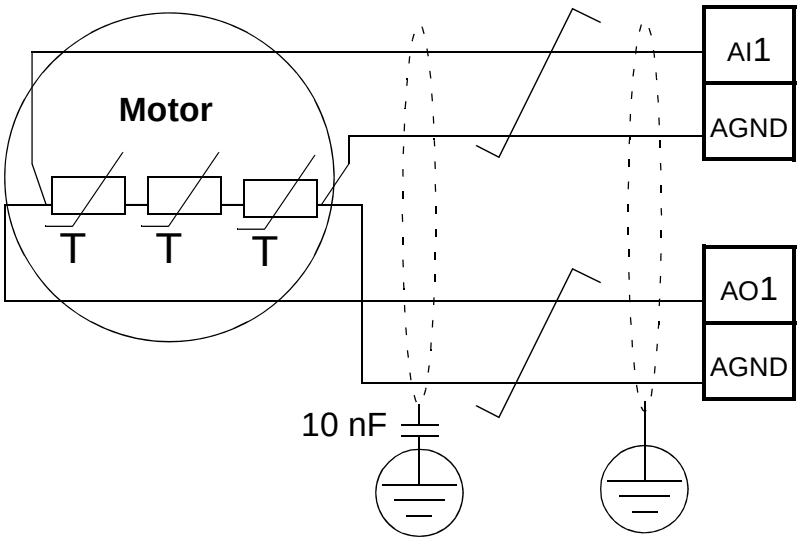

WARNING! IEC 60664 requires double or reinforced insulation between live parts and the surface of accessible parts of electrical equipment which are either non-conductive or conductive but not connected to the protective earth.

To fulfil this requirement, connect a thermistor (and other similar components) to the drive's control terminals using any of these alternatives:

- Separate the thermistor from live parts of the motor with double reinforced insulation.
- Protect all circuits connected to the drive's digital and analogue inputs. Protect against contact, and insulate from other low voltage circuits with basic insulation (rated for the same voltage level as the drive's main circuit).
- Use an external thermistor relay. The relay insulation must be rated for the same voltage level as the drive's main circuit.

The figures below show thermistor relay and PTC sensor connections using a digital input. At the motor end, the cable shield should be earthed through a 10 nF capacitor. If this is not possible, leave the shield unconnected.

3501 SENSOR TYPE = 5 (THERM(0)) or 6 (THERM(1)) – Thermistor relay

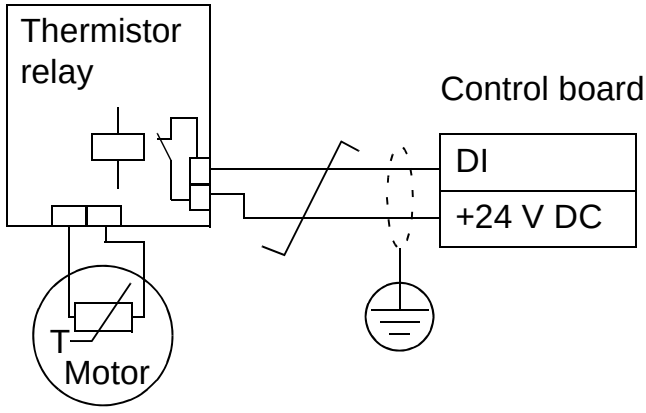

3501 SENSOR TYPE = 5 (THERM(0)) – PTC sensor

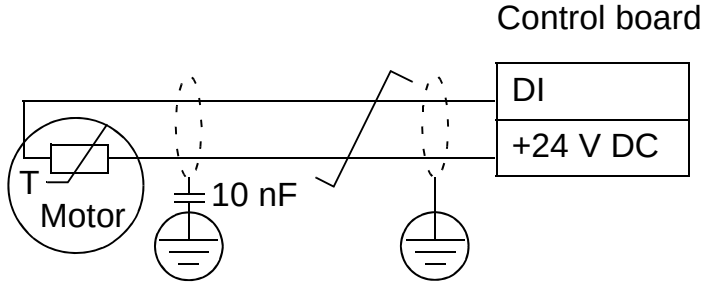

For other faults, or for anticipating motor overheating using a model, see *Group 30: FAULT FUNCTIONS*.

Code	Description	Range
3501	**SENSOR TYPE**	**0…6**

Identifies the type of the motor temperature sensor used, PT100 (°C), PTC (ohms) or thermistor.

See parameters 1501 AO1 CONTENT SEL and 1507 AO2 CONTENT SEL.

0 = NONE

1 = 1 x PT100 – Sensor configuration uses one PT100 sensor.
- Analogue output AO1 or AO2 feeds constant current through the sensor.
- The sensor resistance increases as the motor temperature rises, as does the voltage over the sensor.
- The temperature measurement function reads the voltage through analogue input AI1 or AI2 and converts it to degrees Celsius.

2 = 2 x PT100 – Sensor configuration uses two PT100 sensors.
- Operation is the same as for above 1 x PT100.

3 = 3 x PT100 – Sensor configuration uses three PT100 sensors.
- Operation is the same as for above 1 x PT100.

4 = PTC – Sensor configuration uses one PTC.
- The analogue output feeds a constant current through the sensor.
- The resistance of the sensor increases sharply as the motor temperature rises over the PTC reference temperature (T_{ref}), as does the voltage over the resistor. The temperature measurement function reads the voltage through analogue input AI1 and converts it into ohms.

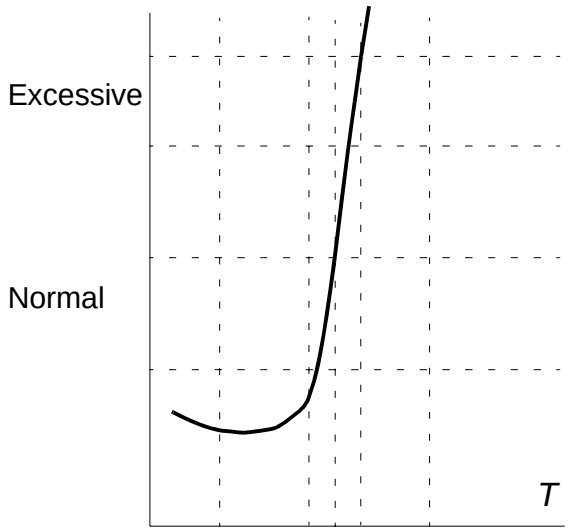

- The table below and the graph above show typical PTC sensor resistance as a function of the motor operating temperature.

Temperature	Resistance
Normal	< 1.5 kohm
Excessive	> 4 kohm

8

<table>
<tr><th>Code</th><th>Description</th><th>Range</th></tr>
<tr><td></td><td>5 = THERM(0) – Sensor configuration uses a thermistor.
• Motor thermal protection is activated through a digital input. Connect either a normally closed thermistor relay or a PTC sensor to a digital input.
• When the digital input is ‘0’, the motor is overheated.
• See the connection figures on page 250.
• The table below and the graph on page 251 show the resistance requirements for a PTC sensor connected between 24 V and digital input as a function of the motor operating temperature.
<table>
<tr><th>Temperature</th><th>Resistance</th></tr>
<tr><td>Normal</td><td>< 3 kohm</td></tr>
<tr><td>Excessive</td><td>> 28 kohm</td></tr>
</table>
6 = THERM(1) – Sensor configuration uses a thermistor.
• Motor thermal protection is activated through a digital input. Connect a normally open thermistor relay to a digital input.
• When the digital input is ‘1’, the motor is overheated.
• See the connection figures on page 250.</td><td></td></tr>
<tr><td>3502</td><td>INPUT SELECTION
Defines the input used for the temperature sensor.
1 = AI1 – PT100 and PTC
2 = AI2 – PT100 and PTC
3…8 = DI1…DI6 – Thermistor and PTC.</td><td>1…8</td></tr>
<tr><td>3503</td><td>ALARM LIMIT
Defines the alarm limit for
the motor temperature measurement.
• At motor temperatures above this limit, the drive displays an alarm (2010, MOTOR TEMP)
For thermistors or PTC connected to digital input:
0 – De-activated.
1 – Activated.</td><td>-10…200 °C
0…5000 ohm
0…1</td></tr>
<tr><td>3504</td><td>FAULT LIMIT
Defines the fault limit for
the motor temperature measurement.
• At motor temperatures above this limit, the drive displays a fault (9, MOT OVERTEMP) and stops the drive.
For thermistors or PTC connected to digital input:
0 – De-activated.
1 – Activated.</td><td>-10…200 °C
0…5000 ohm
0…1</td></tr>
</table>

Group 36: TIMED FUNCTIONS

This group defines the timed functions. The timed functions include:

- four daily starts/stops
- four weekly starts/stops, overrides
- four timers for collecting selected periods together.

A timer can be connected to multiple time periods and a time period can be in multiple timers.

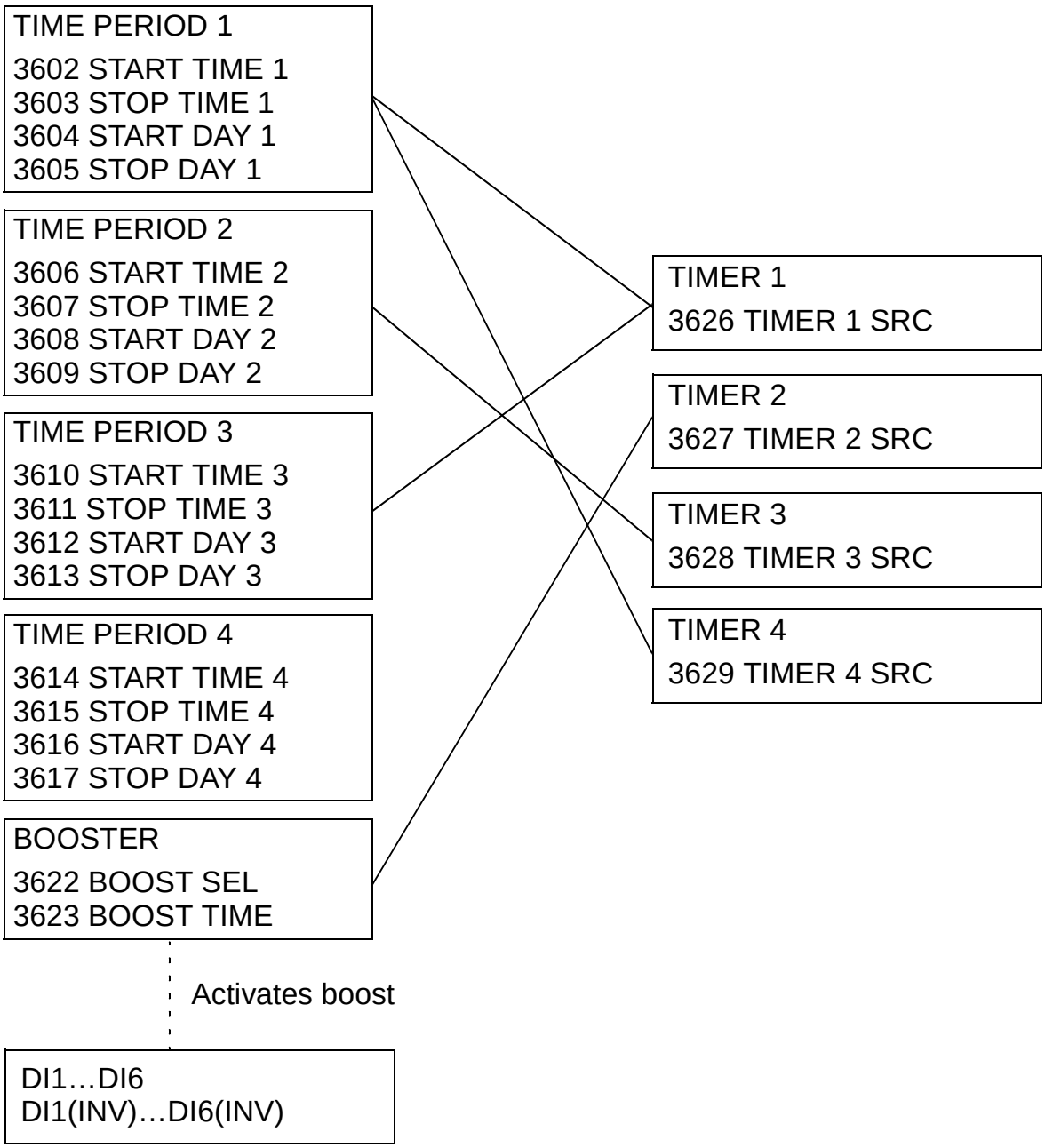

A parameter can be connected to only one timer.

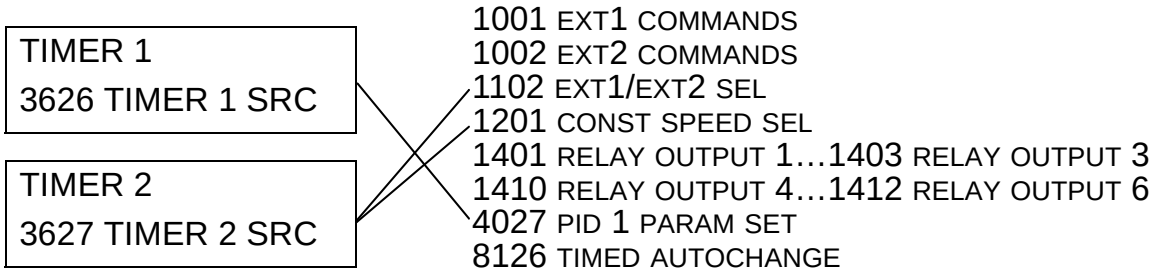

Code	Description	Range
3601	**TIMERS ENABLE** Selects the source for the timer enable signal. 0 = NOT SEL – Timed functions are disabled. 1 = DI1 – Defines digital input DI1 as the timed function enable signal. • The digital input must be activated for timed functions enable. 2…6 = DI2…DI6 – Defines digital input DI2…DI6 as the timed function enable signal. 7 = ACTIVE – Timed functions are enabled. -1 = DI1(INV) – Defines an inverted digital input DI1 as the timed function enable signal. • This digital input must be de-activated for timed function enable. -2…-6 = DI2(INV)…DI6(INV) – Defines an inverted digital input DI2…DI6 as the timed function enable signal.	**-6…7**

Code	Description	Range
3602	**START TIME 1** Defines the daily start time. • The time can be changed in steps of 2 seconds. • If parameter value is 07:00:00, the timer will be activated at 7 a.m. • The figure shows multiple periods on different weekdays. 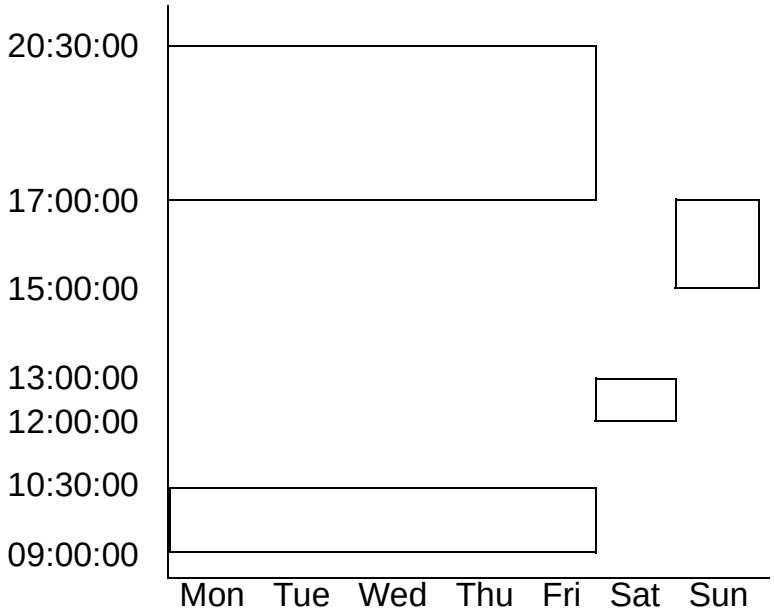 	**00:00:00…23:59:58**
3603	**STOP TIME 1** Defines the daily stop time. • The time can be set in steps of 2 seconds. • If the parameter value is 09:00:00, the timer will be deactivated at 9 a.m.	**00:00:00…23:59:58**
3604	**START DAY 1** Defines the weekly start day. 1 = MONDAY…7 = SUNDAY. • If parameter value is 1, timer 1 weekly is active from Monday midnight (00:00:00).	**1…7**
3605	**STOP DAY 1** Defines weekly stop day. 1 = MONDAY…7 = SUNDAY. • If parameter value is 5, timer 1 weekly will be deactivated on Friday midnight (23:59:58).	**1…7**
3606	**START TIME 2** Defines timer 2 daily start time. • See parameter 3602.	
3607	**STOP TIME 2** Defines timer 2 daily stop time. • See parameter 3603.	

Code	Description	Range
3608	**START DAY 2** Defines timer 2 weekly start day. • See parameter 3604.	
3609	**STOP DAY 2** Defines timer 2 weekly stop day. • See parameter 3605.	
3610	**START TIME 3** Defines timer 3 daily start time. • See parameter 3602.	
3611	**STOP TIME 3** Defines timer 3 daily stop time. • See parameter 3603.	
3612	**START DAY 3** Defines timer 3 weekly start day. • See parameter 3604.	
3613	**STOP DAY 3** Defines timer 3 weekly stop day. • See parameter 3605.	
3614	**START TIME 4** Defines timer 4 daily start time. • See parameter 3602.	
3615	**STOP TIME 4** Defines timer 4 daily start time. • See parameter 3603.	
3616	**START DAY 4** Defines timer 4 weekly start day. • See parameter 3604.	
3617	**STOP DAY 4** Defines timer 4 weekly stop day. • See parameter 3605.	
3622	**BOOST SEL** Selects the source for the boost signal. 0 = NOT SEL – Boost signal is disabled. 1 = DI1 – Defines DI1 as the boost signal. 2…6 = DI2…DI6 – Defines DI2…DI6 as the boost signal. -1 = DI1(INV) – Defines an inverted digital input DI1 as the boost signal. -2…-6 = Defines an inverted digital input DI2…DI6 as the boost signal.	**-6…6**

Code	Description	Range
3623	**BOOST TIME** Defines the boost ON time. Time is started when BOOST SEL signal is released. If parameter value is 01:30:00, boost is active for 1 hour and 30 minutes after activation DI is released. 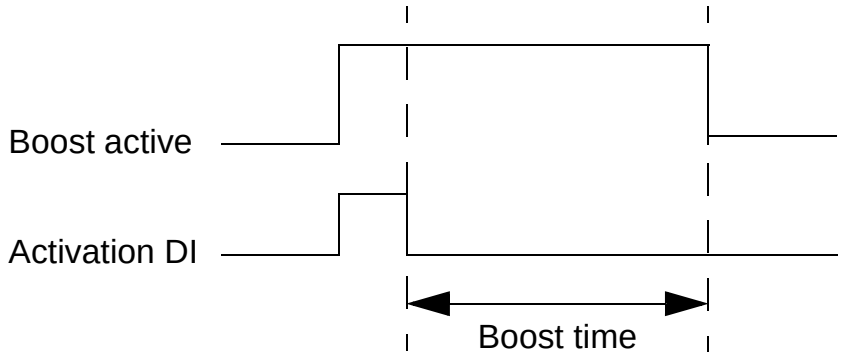 	**00:00:00…23:59:58**
3626	**TIMER 1 SRC** Collects all wanted timers to a timed function. 0 = NOT SEL – No timers have been selected. 1 = P1 – Time Period 1 selected in the timer. 2 = P2 – Time Period 2 selected in the timer. 3 = P1+P2 – Time Periods 1 and 2 selected in the timer. 4 = P3 – Time Period 3 selected in the timer. 5 = P1+P3 – Time Periods 1 and 3 selected in the timer. 6 = P2+P3 – Time Periods 2 and 3 selected in the timer. 7 = P1+P2+P3 – Time Periods 1, 2 and 3 selected in the timer. 8 = P4 – Time Period 4 selected in the timer. 9 = P1+P4 – Time Periods 1 and 4 selected in the timer. 10 = P2+P4 – Time Periods 2 and 4 selected in the timer. 11 = P1+P2+P4 – Time Periods 1, 2 and 4 selected in the timer. 12 = P3+P4 – Time Periods 3 and 4 selected in the timer. 13 = P1+P3+P4 – Time Periods 1, 3 and 4 selected in the timer. 14 = P2+P3+P4 – Time Periods 2, 3 and 4 selected in the timer. 15 = P1+P2+P3+P4 – Time Periods 1, 2, 3 and 4 selected in the timer. 16 = BOOST – Boost (B) selected in the timer. 17 = P1+B – Time Period 1 and Boost selected in the timer. 18 = P2+B – Time Period 2 and Boost selected in the timer.	**0…31**

Code	Description	Range
	19 = P1+P2+B – Time Periods 1 and 2 and Boost selected in the timer. 20 = P3+B – Time Period 3 and Boost selected in the timer. 21 = P1+P3+B – Time Periods 1 and 3 and Boost selected in the timer. 22 = P2+P3+B – Time Periods 2 and 3 and Boost selected in the timer. 23 = P1+P2+P3+B – Time Periods 1, 2 and 3 and Boost selected in the timer. 24 = P4+B – Time Period 4 and Boost selected in the timer. 25 = P1+P4+B – Time Periods 1 and 4 and Boost selected in the timer. 26 = P2+P4+B – Time Periods 2 and 4 and Boost selected in the timer. 27 = P1+P2+P4+B – Time Periods 1, 2 and 4 and Boost selected in the timer. 28 = P3+P4+B – Time Periods 3 and 4 and Boost selected in the timer. 29 = P1+P3+P4+B – Time Periods 1, 3 and 4 and Boost selected in the timer. 30 = P2+P3+P4+B – Time Periods 2, 3 and 4 and Boost selected in the timer. 31 = P1+2+3+4+B – Time Periods 1, 2, 3 and 4 and Boost selected in the timer.	
3627	**TIMER 2 SRC** • See parameter 3626.	
3628	**TIMER 3 SRC** • See parameter 3626.	
3629	**TIMER 4 SRC** • See parameter 3626.	

Group 37: USER LOAD CURVE

This group defines supervision of user adjustable load curves (motor torque as a function of frequency). The curve is defined by five points.

Code	Description	Range
3701	**USER LOAD C MODE** Supervision mode for the user adjustable load curves. This functionality replaces the former underload supervision in *Group 30: FAULT FUNCTIONS*. To emulate it, see section *Correspondence with the obsolete underload supervision* on page *261*. 0 = NOT SEL – Supervision is not active. 1 = UNDERLOAD – Supervision for the torque dropping below the underload curve. 2 = OVERLOAD – Supervision for the torque exceeding the overload curve. 3 = BOTH – Supervision for the torque dropping below the underload curve or exceeding the overload curve. 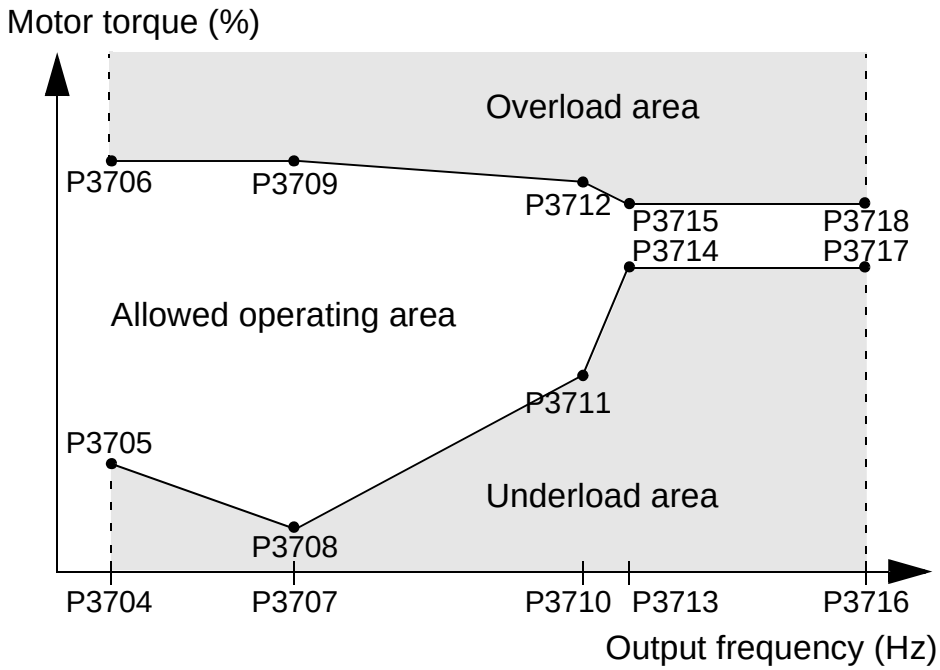 	**0…3**
3702	**USER LOAD C FUNC** Action wanted during load supervision. 1 = FAULT – A fault is generated when the condition defined by 3701 USER LOAD C MODE has been valid longer than the time set by 3703 USER LOAD C TIME. 2 = ALARM – An alarm is generated when the condition defined by 3701 USER LOAD C MODE has been valid longer than half of the time defined by 3703 USER LOAD C TIME.	**1=FAULT, 2=ALARM**

Code	Description	Range
3703	**USER LOAD C TIME** Defines the time limit for generating a fault. • Half of this time is used as the limit for generating an alarm.	**10…400 s**
3704	**LOAD FREQ 1** Defines the frequency value of the first load curve definition point. • Must be smaller than 3707 LOAD FREQ 2.	**0…500 Hz**
3705	**LOAD TORQ LOW 1** Defines the torque value of the first underload curve definition point. • Must be smaller than 3706 LOAD TORQ HIGH 1	**0…600%**
3706	**LOAD TORQ HIGH 1** Defines the torque value of the first overload curve definition point.	**0…600%**
3707	**LOAD FREQ 2** Defines the frequency value of the second load curve definition point. • Must be smaller than 3710 LOAD FREQ 3.	**0…500 Hz**
3708	**LOAD TORQ LOW 2** Defines the torque value of the second underload curve definition point. • Must be smaller than 3709 LOAD TORQ HIGH 2.	**0…600%**
3709	**LOAD TORQ HIGH 2** Defines the torque value of the second overload curve definition point.	**0…600%**
3710	**LOAD FREQ 3** Defines the frequency value of the third load curve definition point. • Must be smaller than 3713 LOAD FREQ 4.	**0…500 Hz**
3711	**LOAD TORQ LOW 3** Defines the torque value of the third underload curve definition point. • Must be smaller than 3712 LOAD TORQ HIGH 3.	**0…600%**
3712	**LOAD TORQ HIGH 3** Defines the torque value of the third overload curve definition point.	**0…600%**
3713	**LOAD FREQ 4** Defines the frequency value of the fourth load curve definition point. • Must be smaller than 3716 LOAD FREQ 5.	**0…500 Hz**
3714	**LOAD TORQ LOW 4** Defines the torque value of the fourth underload curve definition point. • Must be smaller than 3715 LOAD TORQ HIGH 4.	**0…600%**
3715	**LOAD TORQ HIGH 4** Defines the torque value of the fourth overload curve definition point.	**0…600%**
3716	**LOAD FREQ 5** Defines the frequency value of the fifth load curve definition point.	**0…500 Hz**

Code	Description	Range
3717	**LOAD TORQ LOW 5** Defines the torque value of the fifth underload curve definition point. • Must be smaller than 3718 LOAD TORQ HIGH 5.	**0…600%**
3718	**LOAD TORQ HIGH 5** Defines the torque value of the fifth overload curve definition point.	**0…600%**

Correspondence with the obsolete underload supervision

The now obsolete parameter 3015 UNDERLOAD CURVE provided five selectable curves shown in the figure below.

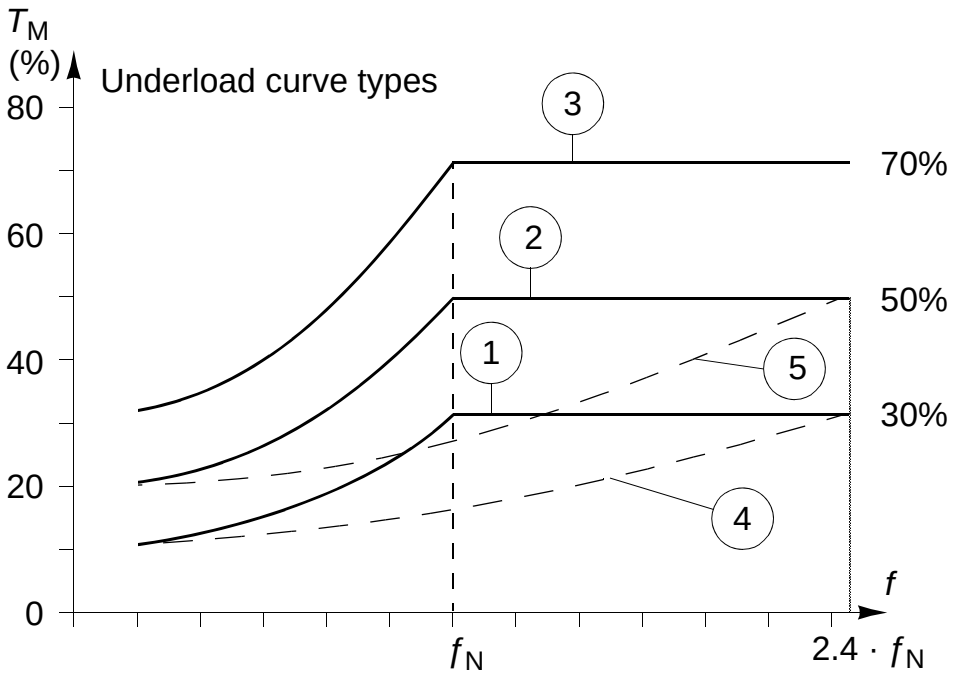

The parameter characteristics were as described below.

- If the load drops below the set curve for longer than the time set by parameter 3014 UNDERLOAD TIME (obsolete), the underload protection is activated.
- Curves 1…3 reach maximum at the motor rated frequency set by parameter 9907 MOTOR NOM FREQ.
- T_M = nominal torque of the motor.
- f_N = nominal frequency of the motor.

If you want to emulate the behaviour of an old underload curve with parameters as in the shaded columns, set the new parameters as in the white columns in the tables.

Underload supervision with parameters 3013…3015 (obsolete)	**Obsolete parameters**		**New parameters**		
	3013 UNDERLOAD FUNCTION	**3014 UNDERLOAD TIME**	**3701 USER LOAD C MODE**	**3702 USER LOAD C FUNC**	**3703 USER LOAD C TIME**
No underload functionality	0	-	0	-	-
Underload curve, fault generated	1	t	1	1	t
Underload curve, alarm generated	2	t	1	2	2 · t

EU (50 Hz):

Obs. par.	**New parameters**									
3015 UNDER LOAD CURVE	**3704 LOAD FREQ 1**	**3705 LOAD TORQ LOW 1**	**3707 LOAD FREQ 2**	**3708 LOAD TORQ LOW 2**	**3710 LOAD FREQ 3**	**3711 LOAD TORQ LOW 3**	**3713 LOAD FREQ 4**	**3714 LOAD TORQ LOW 4**	**3716 LOAD FREQ 5**	**3717 LOAD TORQ LOW 5**
	Hz	**%**	**Hz**	**%**	**Hz**	**%**	**Hz**	**%**	**Hz**	**%**
1	5	10	32	17	41	23	50	30	500	30
2	5	20	31	30	42	40	50	50	500	50
3	5	30	31	43	42	57	50	70	500	70
4	5	10	73	17	98	23	120	30	500	30
5	5	20	71	30	99	40	120	50	500	50

US (60 Hz):

Obs. par.	New parameters									
3015 UNDER LOAD CURVE	3704 LOAD FREQ 1	3705 LOAD TORQ LOW 1	3707 LOAD FREQ 2	3708 LOAD TORQ LOW 2	3710 LOAD FREQ 3	3711 LOAD TORQ LOW 3	3713 LOAD FREQ 4	3714 LOAD TORQ LOW 4	3716 LOAD FREQ 5	3717 LOAD TORQ LOW 5
	Hz	%	Hz	%	Hz	%	Hz	%	Hz	%
1	6	10	38	17	50	23	60	30	500	30
2	6	20	37	30	50	40	60	50	500	50
3	6	30	37	43	50	57	60	70	500	70
4	6	10	88	17	117	23	144	30	500	30
5	6	20	86	30	119	40	144	50	500	50

Overview of PID controllers

PID controller – Basic set-up

In PID control mode, the drive compares a reference signal (setpoint) to an actual signal (feedback), and automatically adjusts the speed of the drive to match the two signals. The difference between the two signals is the error (deviation) value.

Typically PID control mode is used when the speed of a fan or pump needs to be controlled based on pressure, flow or temperature. In most cases – when there is only 1 transducer signal wired to the ACH550 – only parameter *Group 40: PROCESS PID SET 1* is needed.

A schematic of setpoint/feedback signal flow using parameter group 40 is presented on page *265*.

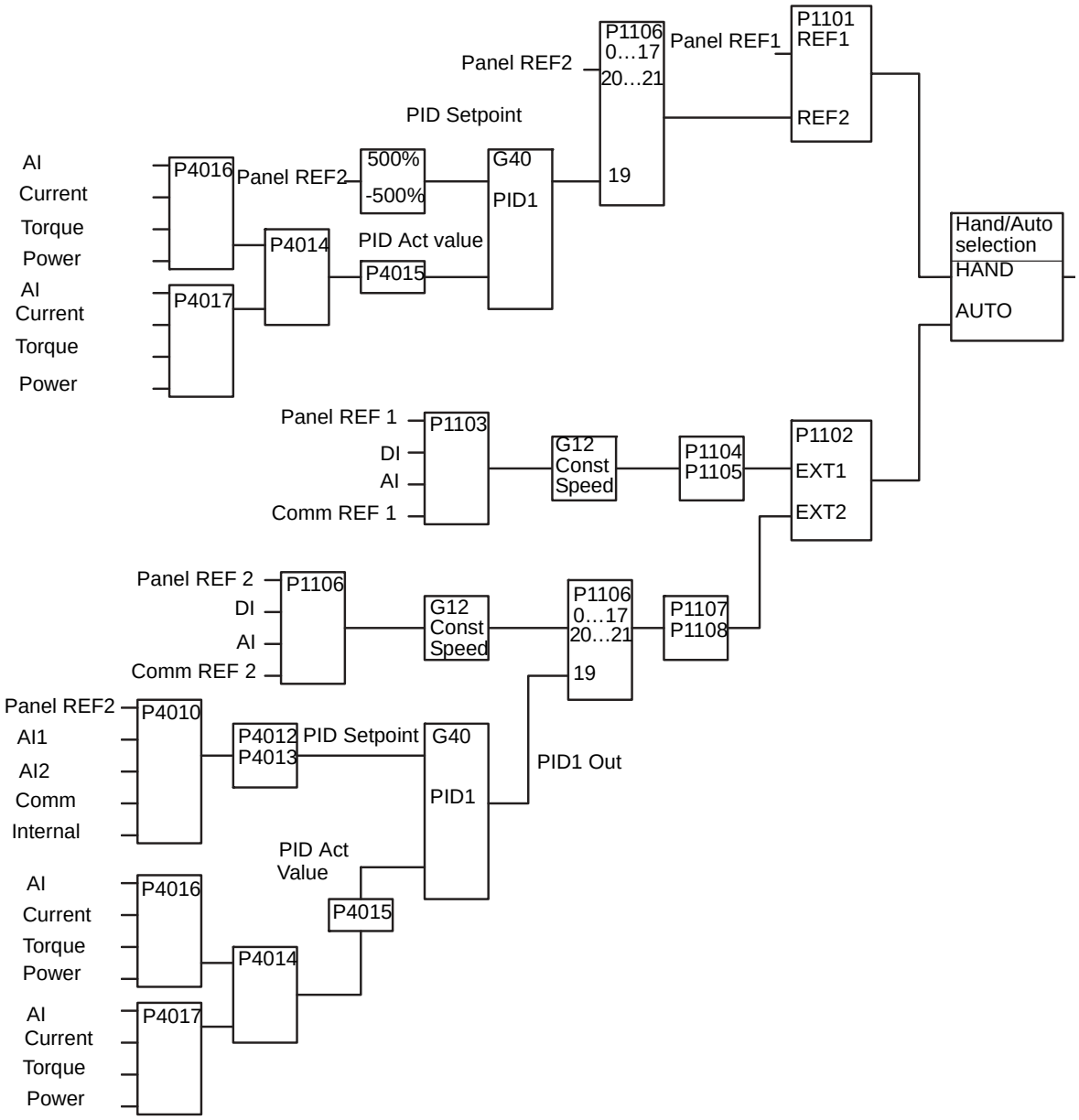

Note: In order to activate and use the PID controller, parameter 1106 REF2 SELECT must be set to value 19 (PID1OUT).

PID controller – Advanced

The ACH550 has two separate PID controllers:

1. Process PID (PID1) and
2. External PID (PID2).

Process PID controller (PID1)

Process PID (PID1) has two separate sets of parameters:

- Process PID (PID1) set 1, defined in *Group 40: PROCESS PID SET 1*, and
- Process PID (PID1) set 2, defined in *Group 41: PROCESS PID SET 2*.

The user can select between the two different sets by using parameter 4027 PID 1 PARAM SET.

Typically two different PID controller sets are being used when the load of the motor changes considerably from one situation to another.

External PID controller (PID2)

External PID (PID2), which is defined in *Group 42: EXT / TRIM PID*, can be used in two different ways:

- Instead of using additional PID controller hardware, External PID can be set to control a field instrument like a damper or a valve through outputs of the ACH550. In this case, parameter 4230 TRIM MODE has to be set to value 0 (default value).
- External PID (PID2) can be used as an additional PID controller to Process PID (PID1) to trim or fine-tune the speed of the ACH550.

Group 40: PROCESS PID SET 1

This group defines a set of parameters used with the Process PID (PID1) controller.

Typically only parameters in this group are needed.

Code	Description	Range
4001	**GAIN** Defines the gain of the PID controller. • The setting range is 0.1…100. • At 0.1, the PID controller output changes one-tenth as much as the error value. • At 100, the PID controller output changes one hundred times as much as the error value. Use the proportional gain and integration time values to adjust the responsiveness of the system. • A low value for proportional gain and a high value for integral time ensures stable operation, but provides sluggish response. • If the proportional gain value is too large or the integral time too short, the system can become unstable. **Procedure:** • Initially, set: • 4001 GAIN = 0.0. • 4002 INTEGRATION TIME = 20 seconds. • Start the system and see if it reaches the setpoint quickly while maintaining stable operation. If not, increase GAIN (4001) until the actual signal (or drive speed) oscillates constantly. It may be necessary to start and stop the drive to induce this oscillation. • Reduce GAIN (4001) until the oscillation stops. • Set GAIN (4001) to 0.4 to 0.6 times the above value. • Decrease the INTEGRATION TIME (4002) until the feedback signal (or drive speed) oscillates constantly. It may be necessary to start and stop the drive to induce this oscillation. • Increase INTEGRATION TIME (4002) until the oscillation stops. • Set INTEGRATION TIME (4002) to 1.15 to 1.5 times the above value. • If the feedback signal contains high frequency noise, increase the value of parameter 1303 FILTER AI1 or 1306 FILTER AI2 until the noise is filtered from the signal.	**0.1…100**

Code	Description	Range
4002	**INTEGRATION TIME** Defines the integration time of the PID controller. Integration time is, by definition, the time required to increase the output by the error value: • Error value is constant and 100%. • Gain = 1. • Integration time of 1 second denotes that a 100% change is achieved in 1 second. 0.0 = NOT SEL – Disables integration (I-part of the controller). 0.1…600.0 = Integration time (seconds). • See 4001 for the adjustment procedure. 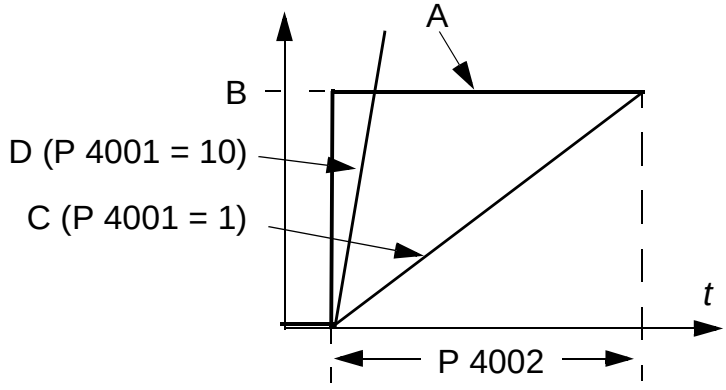 A = Error B = Error value step C = Controller output with Gain = 1 D = Controller output with Gain = 10	**0.0 s=NOT SEL,** **0.1…600 s**

Code	Description	Range
4003	**DERIVATION TIME** Defines the derivation time of the PID controller. • You can add the derivative of the error to the PID controller output. The derivative is the error value's rate of change. For example, if the process error value changes linearly, the derivative is a constant added to the PID controller output. • The error-derivative is filtered with a 1-pole filter. The time constant of the filter is defined by parameter 4004 PID DERIV FILTER. 0.0 – Disables the error-derivative part of the PID controller output. 0.1…10.0 – Derivation time (seconds). 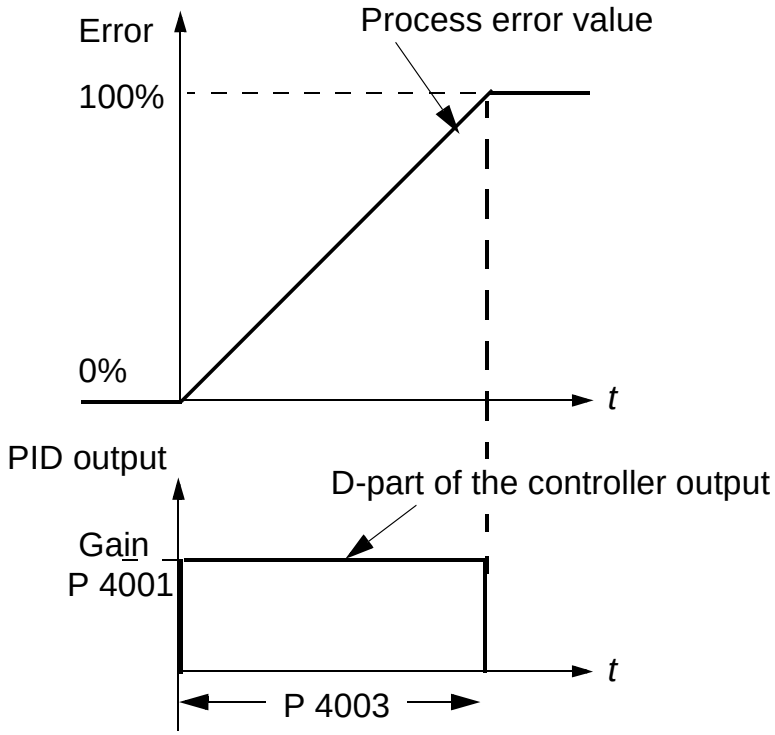 	**0.0…10.0 s**
4004	**PID DERIV FILTER** Defines the filter time constant for the error-derivative part of the PID controller output. • Before being added to the PID controller output, the error-derivative is filtered with a 1-pole filter. • Increasing the filter time smooths the error-derivative, reducing noise. 0.0 – Disables the error-derivative filter. 0.1…10.0 – Filter time constant (seconds).	**0.0…10.0 s**
4005	**ERROR VALUE INV** Selects either a normal or inverted relationship between the feedback signal and the drive speed. 0 = NO – Normal, a decrease in feedback signal increases drive speed. Error = Ref - Fbk. 1 = YES – Inverted, a decrease in feedback signal decreases drive speed. Error = Fbk - Ref.	**0=NO, 1=YES**

Code	Description	Range
4006	**UNIT** Selects the unit for the PID controller actual values. (PID1 parameters 0128, 0130 and 0132). • See parameter 3405 for list of available units.	**0…127**
4007	**UNIT SCALE** Defines the decimal point location in PID controller actual values. • Enter the decimal point location counting from the right end of the entry. • See the table for an example using pi (3.14159).	**0…4**

4007 Value	Entry	Display
0	00003	3
1	00031	3.1
2	00314	3.14
3	03142	3.142
4	31416	3.1416

4008	**0% VALUE** Defines (together with the next parameter) the scaling applied to the actual values of the PID controller (PID1 parameters 0128, 0130 and 0132). • Units and scale are defined by parameters 4006 and 4007.	**unit and scale defined by par. 4006 and 4007**

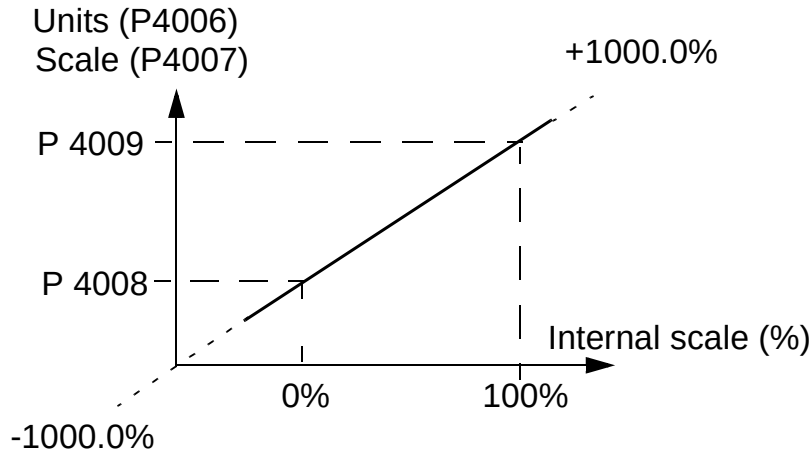

4009	**100% VALUE** Defines (together with the previous parameter) the scaling applied to the actual values of the PID controller. • Units and scale are defined by parameters 4006 and 4007.	**unit and scale defined by par. 4006 and 4007**

Code	Description	Range
4010	**SET POINT SEL**	**0…20**
	Defines the reference signal source for the PID controller. • Parameter has no significance when the PID regulator is by-passed (see 8121 REG BYPASS CTRL). 0 = KEYPAD – Control panel provides reference. 1 = AI1 – Analogue input 1 provides reference. 2 = AI2 – Analogue input 2 provides reference. 8 = COMM – Fieldbus provides reference. 9 = COMM+AI1 – Defines a fieldbus and analogue input 1 (AI1) combination as the reference source. See *Analogue input reference correction* on page *272*. 10 = COMM*AI1 – Defines a fieldbus and analogue input 1 (AI1) combination as the reference source. See *Analogue input reference correction* on page *272*. 11 = DI3U,4D(RNC) – Digital inputs, acting as a motor potentiometer control, provide reference. • DI3 increases the speed (the U stands for “up”) • DI4 decreases the reference (the D stands for “down”). • Parameter 2205 ACCELER TIME 2 controls the reference signal’s rate of change. • R = Stop command resets the reference to zero. • NC = Reference value is not copied. 12 = DI3U,4D(NC) – Same as DI3U,4D(RNC) above, except: • Stop command does not reset reference to zero. At restart the motor ramps up, at the selected acceleration rate, to the stored reference. 13 = DI5U,6D(NC) – Same as DI3U,4D(NC) above, except: • Uses digital inputs DI5 and DI6. 14 = AI1+AI2 – Defines an analogue input 1 (AI1) and analogue input 2 (AI2) combination as the reference source. See *Analogue input reference correction* on page *272*. 15 = AI1*AI2 – Defines an analogue input 1 (AI1) and analogue input 2 (AI2) combination as the reference source. See *Analogue input reference correction* on page *272*. 16 = AI1-AI2 – Defines an analogue input 1 (AI1) and analogue input 2 (AI2) combination as the reference source. See *Analogue input reference correction* on page *272*. 17 = AI1/AI2 – Defines an analogue input 1 (AI1) and analogue input 2 (AI2) combination as the reference source. See *Analogue input reference correction* on page *272*. 19 = INTERNAL – A constant value set using parameter 4011 provides reference. 20 = PID2OUT – Defines PID controller 2 output (parameter 0127 PID 2 OUTPUT) as the reference source.	

Code	Description	Range
	Analogue input reference correction Parameter values 9, 10, and 14…17 use the formula in the following table.	

Value setting	Calculation of the AI reference
C + B	C value + (B value - 50% of reference value)
C * B	C value · (B value / 50% of reference value)
C - B	(C value + 50% of reference value) - B value
C / B	(C value · 50% of reference value) / B value

Where:
- C = Main reference value
  (= COMM for values 9, 10 and = AI1 for values 14…17)
- B = Correcting reference
  (= AI1 for values 9, 10 and = AI2 for values 14…17).

Example: The figure shows the reference source curves for value settings 9, 10, and 14…17, where**:**
- C = 25%.
- P 4012 SETPOINT MIN = 0.
- P 4013 SETPOINT MAX = 0.
- B varies along the horizontal axis.

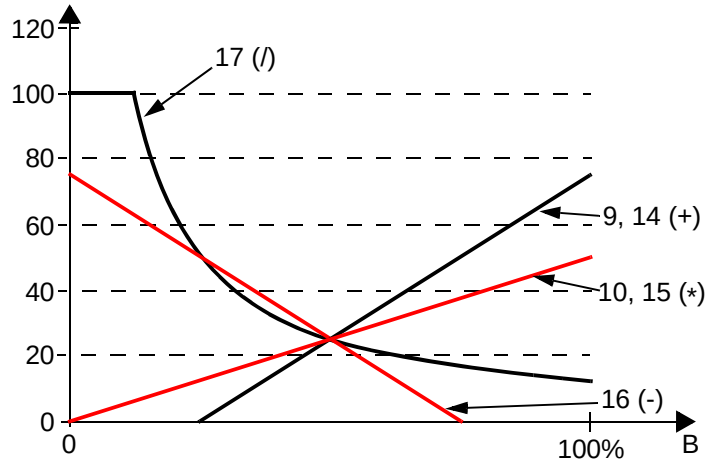

4011	**INTERNAL SETPNT** Sets a constant value used for the process reference. • Units and scale are defined by parameters 4006 and 4007.	**unit and scale defined by par 4006 and 4007**
4012	**SETPOINT MIN** Sets the minimum value for the reference signal source. See parameter 4010.	**-500.0…500.0%**
4013	**SETPOINT MAX** Sets the maximum value for the reference signal source. See parameter 4010.	**-500.0…500.0%**

Code	Description	Range
4014	**FBK SEL** Defines the PID controller feedback (actual signal). • You can define a combination of two actual values (ACT1 and ACT2) as the feedback signal. • Use parameter 4016 to define the source for actual value 1 (ACT1). • Use parameter 4017 to define the source for actual value 2 (ACT2). 1 = ACT1 – Actual value 1 (ACT1) provides the feedback signal. 2 = ACT1-ACT2 – ACT1 minus ACT2 provides the feedback signal. 3 = ACT1+ACT2 – ACT1 plus ACT2 provides the feedback signal. 4 = ACT1*ACT2 – ACT1 times ACT2 provides the feedback signal. 5 = ACT1/ACT2 – ACT1 divided by ACT2 provides the feedback signal. 6 = MIN(ACT1,2) – The smaller of ACT1 or ACT2 provides the feedback signal. 7 = MAX(ACT1,2) – The greater of ACT1 or ACT2 provides the feedback signal. 8 = sqrt(ACT1-2) – Square root of the value for ACT1 minus ACT2 provides the feedback signal. 9 = sqA1+sqA2 – Square root of ACT1 plus the square root of ACT2 provides the feedback signal. 10 = sqrt(ACT1) – Square root of the value for ACT1 provides the feedback signal. 11 = COMM FBK 1 – Signal 0158 PID COMM VALUE 1 provides the feedback signal. 12 = COMM FBK 2 – Signal 0159 PID COMM VALUE 2 provides the feedback signal. 13 = AVE(ACT1,2) – The average of ACT1 and ACT2 provides the feedback signal.	**1…13**
4015	**FBK MULTIPLIER** Defines an extra multiplier for the PID feedback value FBK defined by parameter 4014. • Used mainly in applications where the flow is calculated from the pressure difference. 0.000 = NOT SEL – The parameter has no effect (1.000 used as the multiplier). -32.768…32.767 – Multiplier applied to the signal defined by parameter 4014 FBK SEL. **Example:** $FBK = Multiplier \times \sqrt{ACT1 - ACT2}$	**-32.768…32.767,** **0.000=NOT SEL**

8

Code	Description	Range
4016	**ACT1 INPUT** Defines the source for actual value 1 (ACT1). See also parameter 4018 ACT1 MINIMUM. 1 = AI1 – Uses analogue input 1 for ACT1. 2 = AI2 – Uses analogue input 2 for ACT1. 3 = CURRENT – Uses current for ACT1. 4 = TORQUE – Uses torque for ACT1. 5 = POWER – Uses power for ACT1. 6 = COMM ACT 1 – Uses value of signal 0158 PID COMM VALUE 1 for ACT1. 7 = COMM ACT 2 – Uses value of signal 0159 PID COMM VALUE 2 for ACT1.	**1…7**
4017	**ACT2 INPUT** Defines the source for actual value 2 (ACT2). See also parameter 4020 ACT2 MINIMUM. 1 = AI1 – Uses analogue input 1 for ACT2. 2 = AI2 – Uses analogue input 2 for ACT2. 3 = CURRENT – Uses current for ACT2. 4 = TORQUE – Uses torque for ACT2. 5 = POWER – Uses power for ACT2. 6 = COMM ACT 1 – Uses value of signal 0158 PID COMM VALUE 1 for ACT2. 7 = COMM ACT 2 – Uses value of signal 0159 PID COMM VALUE 2 for ACT2.	**1…7**

Code	Description	Range
4018	**ACT1 MINIMUM** Sets the minimum value for ACT1. • Scales the source signal used as the actual value ACT1 (defined by parameter 4016 ACT1 INPUT). For parameter 4016 values 6 (COMM ACT 1) and 7 (COMM ACT 2) scaling is not done.	**-1000…1000%**

Par 4016	Source	Source min.	Source max.
1	Analogue input 1	1301 MINIMUM AI1	1302 MAXIMUM AI1
2	Analogue input 2	1304 MINIMUM AI2	1305 MAXIMUM AI2
3	Current	0	2 · nominal current
4	Torque	-2 · nominal torque	2 · nominal torque
5	Power	-2 · nominal power	2 · nominal power

• See the figure: A = Normal; B = Inversion (ACT1 MINIMUM > ACT1 MAXIMUM).

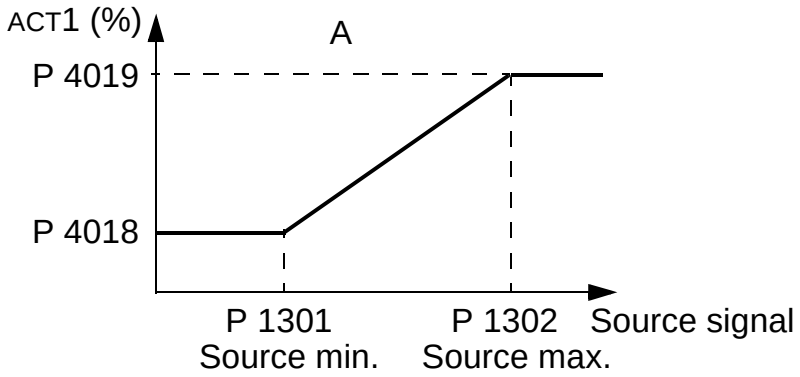

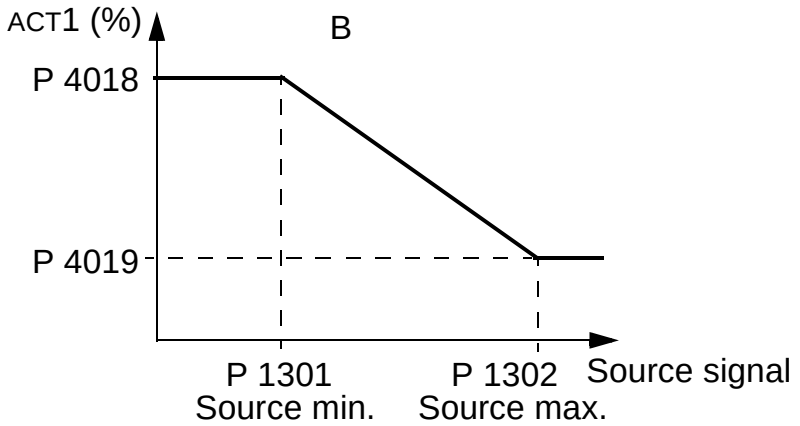

4019	**ACT1 MAXIMUM** Sets the maximum value for ACT1. • See 4018 ACT1 MINIMUM.	**-1000…1000%**
4020	**ACT2 MINIMUM** Sets the minimum value for ACT2. • See 4018 ACT1 MINIMUM.	**-1000…1000%**

Code	Description	Range
4021	**ACT2 MAXIMUM** Sets the maximum value for ACT2. • See 4018 ACT1 MINIMUM.	**-1000…1000%**
4022	**SLEEP SELECTION** Defines the control for the PID sleep function. 0 = NOT SEL– Disables the PID sleep control function. 1 = DI1 – Defines digital input DI1 as the control for the PID sleep function. • Activating the digital input activates the sleep function. • De-activating the digital input restores PID control. 2…6 = DI2…DI6 – Defines digital input DI2…DI6 as the control for the PID sleep function. • See DI1 above. 7 = INTERNAL – Defines the output rpm/frequency, process reference, and process actual value as the control for the PID sleep function. • Refer to parameters 4025 WAKE-UP DEV and 4023 PID SLEEP LEVEL. -1 = DI1(INV) – Defines an inverted digital input DI1 as the control for the PID sleep function. • De-activating the digital input activates the sleep function. • Activating the digital input restores PID control. -2…-6 = DI2(INV)…DI6(INV) – Defines an inverted digital input DI2…DI6 as the control for the PID sleep function. • See DI1(INV) above.	**-6…7**

Code	Description	Range
4023	**PID SLEEP LEVEL** Sets the motor speed/frequency that enables the PID sleep function – a motor speed/frequency below this level, for at least the time period 4024 PID SLEEP DELAY, enables the PID sleep function (stopping the drive). • Requires 4022 = 7 (INTERNAL). • See the figure: A = PID output level; B = PID process feedback. 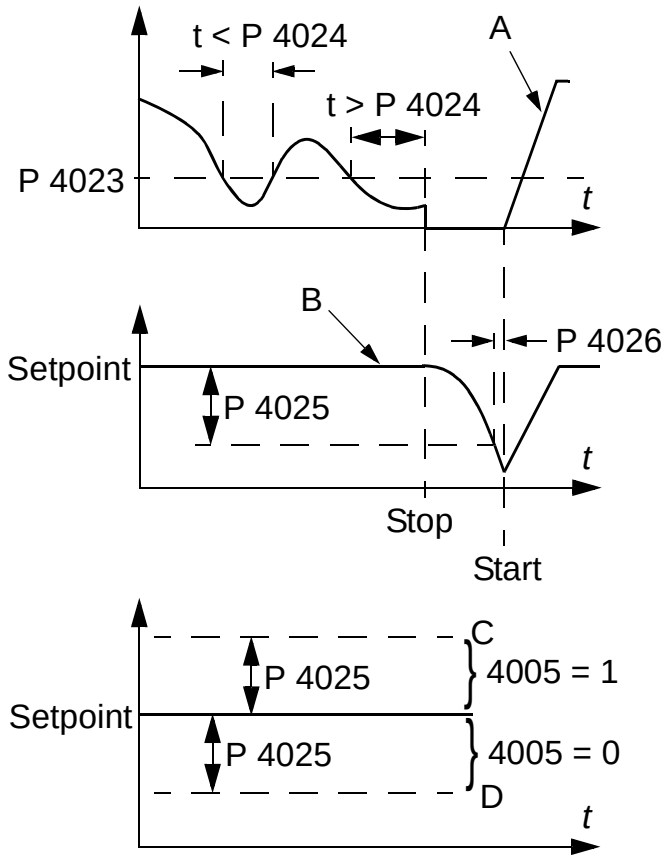 	**0…7200 rpm/** **0.0…120 Hz**

Code	Description	Range
4024	**PID SLEEP DELAY** Sets the time delay for the PID sleep function – a motor speed/ frequency below 4023 PID SLEEP LEVEL for at least this time period enables the PID sleep function (stopping the drive). • See 4023 PID SLEEP LEVEL above.	**0.0…3600 s**
4025	**WAKE-UP DEV** Defines the wake-up deviation – a deviation from the setpoint greater than this value, for at least the time period 4026 WAKE-UP DELAY, restarts the PID controller. • Parameters 4006 and 4007 define the units and scale. • Parameter 4005 = 0, Wake-up level = Setpoint - Wake-up deviation. • Parameter 4005 = 1, Wake-up level = Setpoint + Wake-up deviation. • Wake-up level can be above or below setpoint. See the figure: • C = Wake-up level when parameter 4005 = 1 • D = Wake-up level when parameter 4005 = 0 • E = Feedback is above wake-up level and lasts longer than 4026 WAKE-UP DELAY – PID function wakes up. • F = Feedback is below wake-up level and lasts longer than 4026 WAKE-UP DELAY – PID function wakes up. 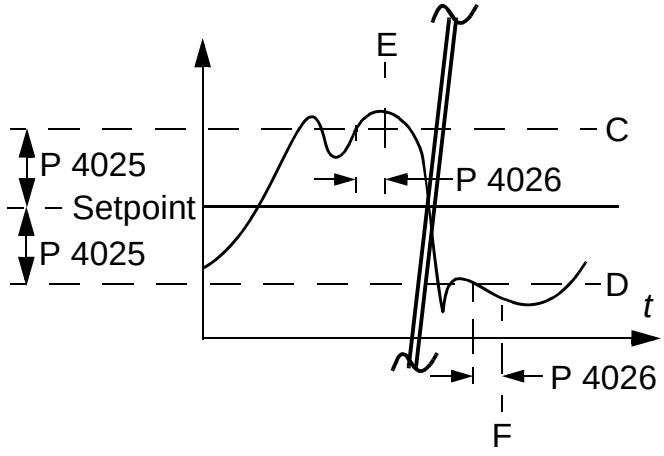 	**unit and scale defined by par. 4106 and 4107**
4026	**WAKE-UP DELAY** Defines the wake-up delay – a deviation from the setpoint greater than 4025 WAKE-UP DEV, for at least this time period, restarts the PID controller. • See 4023 PID SLEEP LEVEL above.	**0…60 s**

Code	Description	Range
4027	**PID 1 PARAM SET**	**-6…11**
	Process PID (PID1) has two separate sets of parameters, PID set 1 and PID set 2. PID 1 PARAM SET defines which set is selected. • PID set 1 uses parameters 4001…4026. • PID set 2 uses parameters 4101…4126. 0 = SET 1 – PID set 1 (parameters 4001…4026) is active. 1 = DI1 – Defines digital input DI1 as the control for PID set selection. • Activating the digital input selects PID set 2. • De-activating the digital input selects PID set 1. 2…6 = DI2…DI6 – Defines digital input DI2…DI6 as the control for PID set selection. • See DI1 above. 7 = SET 2 – PID set 2 (parameters 4101…4126) is active. 8…11 = TIMER 1…4 – Defines the timer as the control for the PID set selection (Timer de-activated = PID set 1; Timer activated = PID set 2) • See parameter *Group 36: TIMED FUNCTIONS*. -1 = DI1(INV) – Defines an inverted digital input DI1 as the control for PID set selection. • Activating the digital input selects PID set 1. • De-activating the digital input selects PID set 2. -2…-6 = DI2(INV)…DI6(INV) – Defines an inverted digital input DI2…DI6 as the control for PID set selection. • See DI1(INV) above. For 2-ZONE selections (12…14), the drive first calculates the difference between PID1 set 1 setpoint and feedback (deviation) as well as the difference between PID1 set 2 setpoint and feedback (deviation). 12 = 2-ZONE MIN – The drive will control the zone (and select the set, PID1 set 1 or PID1 set 2) which has a larger deviation. • A positive deviation (a setpoint higher than the feedback) is always larger than a negative deviation. This keeps feedback values at or above the setpoint. • Controller does not react to the situation of feedback above setpoint if another zone's feedback is closer to its setpoint. 13 = 2-ZONE MAX – The drive will control the zone (and select the set, PID1 set 1 or PID1 set 2) which has a smaller deviation. • A negative deviation (a setpoint lower than the feedback) is always smaller than a positive deviation. This keeps feedback values at or below the setpoint. • Controller does not react to the situation of feedback below setpoint if another zone's feedback is closer to its setpoint. 14 = 2-ZONE AVE – The drive calculates the average of the deviations, and uses it to control zone 1. Therefore one feedback is kept above its setpoint and another is kept as much below its setpoint.	

Group 41: PROCESS PID SET 2

This group defines a second set of parameters used with the Process PID (PID1) controller.

The operation of parameters 4101…4126 is analogous with Process PID set 1 (PID1) parameters 4001…4026.

PID parameter set 2 can be selected by parameter 4027 PID 1 PARAM SET.

Code	Description	Range
4101 … 4126	See 4001…4026.	

Group 42: EXT / TRIM PID

This group defines the parameters used for the External PID controller (PID2) of the ACH550.

The operation of parameters 4201…4221 is analogous with Process PID controller (PID1) set 1 parameters 4001…4021.

Code	Description	Range
4201 … 4221	See 4001…4021.	
4228	**ACTIVATE** Defines the source for enabling the external PID function. • Requires 4230 TRIM MODE = 0 (NOT SEL). 0 = NOT SEL – Disables external PID control. 1 = DI1 – Defines digital input DI1 as the control for enabling external PID control. • Activating the digital input enables external PID control. • De-activating the digital input disables external PID control. 2…6 = DI2…DI6 – Defines digital input DI2…DI6 as the control for enabling external PID control. • See DI1 above. 7 = DRIVE RUN – Defines the start command as the control for enabling external PID control. • Activating the start command (drive is running) enables external PID control. 8 = ON – Defines the power-on as the control for enabling external PID control. • Activating power to the drive enables external PID control. 9…12 = TIMER 1…4 – Defines the timer as the control for enabling external PID control (Timer active enables external PID control). • See *Group 36: TIMED FUNCTIONS*. -1 = DI1(INV) – Defines an inverted digital input DI1 as the control for enabling external PID control. • Activating the digital input disables external PID control. • De-activating the digital input enables external PID control. -2…-6 = DI2(INV)…DI6(INV) – Defines an inverted digital input DI2…DI6 as the control for enabling external PID control. • See DI1(INV) above.	**-6…12**
4229	**OFFSET** Defines the offset for the PID output. • When PID is activated, output starts from this value. • When PID is deactivated, output resets to this value. • Parameter is not active when 4230 TRIM MODE <> 0 (i.e. trim mode is active).	**0.0…100.0%**

Code	Description	Range
4230	**TRIM MODE** Selects the type of trim, if any. With the trim it is possible to combine a corrective factor to the drive reference. 0 = NOT SEL – Disables the trim function. 1 = PROPORTIONAL – Adds a trim factor that is proportional to the rpm/Hz reference. 2 = DIRECT – Adds a trim factor based on the control loop's maximum limit.	**0…2**
4231	**TRIM SCALE** Defines the multiplier (as a percentage, plus or minus) used in the trim mode.	**-100.0…100.0%**
4232	**CORRECTION SRC** Defines the trimming reference for the correction source. 1 = PID2REF – Uses appropriate REF MAX (Switch A OR B): • 1105 REF1 MAX when REF1 is active (A). • 1108 REF2 MAX when REF2 is active (B). 2 = PID2OUTPUT – Uses the absolute maximum speed or frequency (Switch C): • 2002 MAXIMUM SPEED if 9904 MOTOR CTRL MODE = 1 (VECTOR:SPEED). • 2008 MAXIMUM FREQ IF 9904 MOTOR CTRL MODE = 3 (SCALAR:FREQ).	**1=PID2REF, 2=PID2OUTPUT**

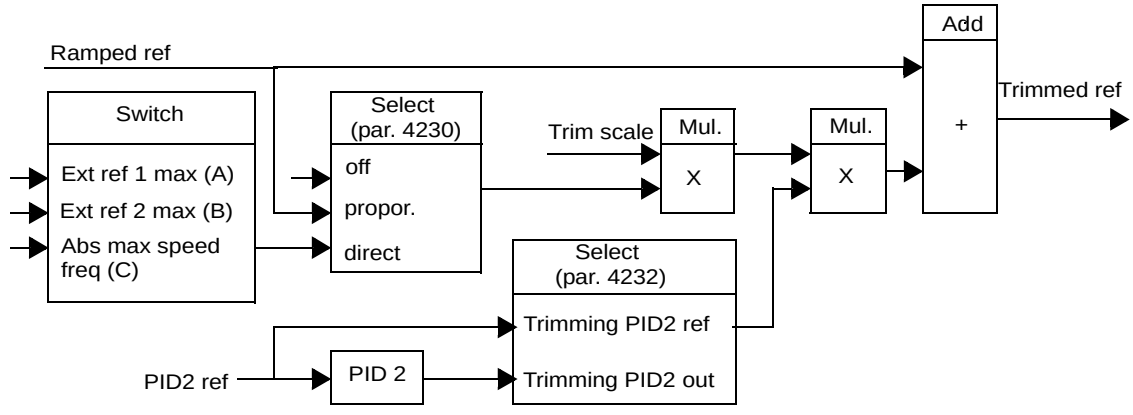

Group 51: EXT COMM MODULE

This group defines set-up variables for an external fieldbus communication module. Refer to the communication module documentation for more information on these parameters.

Code	Description	Range
5101	**FBA TYPE** Displays the type of the connected fieldbus adapter module. 0 = NOT DEFINED – Module not found or not connected. Check chapter *Mechanical installation* in the fieldbus user's manual and check that parameter 9802 is set to 4 = EXT FBA. 1 = PROFIBUS-DP 16 = INTERBUS 21 = LONWORKS 32 = CANopen 37 = DEVICENET 64 = MODBUS PLUS 101 = CONTROLNET 128 = ETHERNET	
5102 … 5126	**FB PAR 2…FB PAR 26** Refer to the communication module documentation for more information on these parameters.	**0…65535**
5127	**FBA PAR REFRESH** Validates any changed fieldbus parameter settings. 0 = DONE – Refreshing done. 1 = REFRESH – Refreshing. • After refreshing, the value reverts automatically to DONE.	**0=DONE, 1=REFRESH**
5128	**FILE CPI FW REV** Displays the CPI firmware revision of the drive's fieldbus adapter configuration file. Format is xyz, where: • x = major revision number • y = minor revision number • z = correction number. **Example:** 107 = revision 1.07	**0…0xFFFF**
5129	**FILE CONFIG ID** Displays the revision of the drive's fieldbus adapter module's configuration file identification. • File configuration information depends on the drive application program.	**0…0xFFFF**

Code	Description	Range
5130	**FILE CONFIG REV** Contains the revision of the drive's fieldbus adapter module configuration file. **Example:** 1 = revision 1	**0…0xFFFF**
5131	**FBA STATUS** Contains the status of the adapter module. 0 = IDLE – Adapter not configured. 1 = EXECUT INIT – Adapter is initializing. 2 = TIME OUT – A time-out has occurred in the communication between the adapter and the drive. 3 = CONFIG ERROR – Adapter configuration error. • The major or minor revision code of the adapter's CPI firmware revision differs from that stated in the drive's configuration file. 4 = OFF-LINE – Adapter is off-line. 5 = ON-LINE – Adapter is on-line. 6 = RESET – Adapter is performing a hardware reset.	**0…6**
5132	**FBA CPI FW REV** Contains the revision of the module's CPI program. Format is xyz, where: • x = major revision number • y = minor revision number • z = correction number. **Example:** 107 = revision 1.07	**0…0xFFFF**
5133	**FBA APPL FW REV** Contains the revision of the module's application program. Format is xyz, where: • x = major revision number • y = minor revision number • z = correction number. **Example:** 107 = revision 1.07	**0…0xFFFF**

Group 52: PANEL COMM

This group defines the communication settings for the control panel port on the drive. Normally, when using the supplied control panel (operator keypad), there is no need to change settings in this group.

In this group, parameter modifications take effect on the next power-up.

Code	Description	Range
5201	**STATION ID** Defines the address of the drive. • Two units with the same address are not allowed on-line. • Range: 1…247.	**1…247**
5202	**BAUD RATE** Defines the communication speed of the drive in kbits per second (kb/s). 9.6 kb/s 19.2 kb/s 38.4 kb/s 57.6 kb/s 115.2 kb/s	**9.6, 19.2, 38.4, 57.6, 115.2 kb/s**
5203	**PARITY** Sets the character format to be used with the panel communication. 0 = 8 NONE 1 – 8 data bits, no parity, one stop bit. 1 = 8 NONE 2 – 8 data bits, no parity, two stop bits. 2 = 8 EVEN 1 – 8 data bits, even parity, one stop bit. 3 = 8 ODD 1 – 8 data bits, odd parity, one stop bit.	**0…3**
5204	**OK MESSAGES** Contains a count of valid messages received by the drive. • During normal operation, this counter is increasing constantly.	**0…65535**
5205	**PARITY ERRORS** Contains a count of the characters with a parity error that is received from the bus. For high counts, check: • Parity settings of devices connected on the bus – they must not differ. • Ambient electro-magnetic noise levels – high noise levels generate errors.	**0…65535**

Code	Description	Range
5206	**FRAME ERRORS** Contains a count of the characters with a framing error that the bus receives. For high counts, check: • Communication speed settings of devices connected on the bus – they must not differ. • Ambient electro-magnetic noise levels – high noise levels generate errors.	**0…65535**
5207	**BUFFER OVERRUNS** Contains a count of the characters received that cannot be placed in the buffer. • Longest possible message length for the drive is 128 bytes. • Received messages exceeding 128 bytes overflow the buffer. The excess characters are counted.	**0…65535**
5208	**CRC ERRORS** Contains a count of the messages with a CRC error that the drive receives. For high counts, check: • Ambient electro-magnetic noise levels – high noise levels generate errors. • CRC calculations for possible errors.	**0…65535**

Group 53: EFB PROTOCOL

This group defines set-up variables used for an embedded fieldbus (EFB) communication protocol. Refer to the communication protocol documentation for more information on these parameters.

Code	Description	Range
5301	**EFB PROTOCOL ID** Contains the identification and program revision of the protocol. • Format: XXYY, where xx = protocol ID, and YY = program revision.	**0…0xFFFF**
5302	**EFB STATION ID** Defines the node address of the RS485 link. • The node address on each unit must be unique.	**0…65535**
5303	**EFB BAUD RATE** Defines the communication speed of the RS485 link in kbits per second (kb/s). 1.2 kb/s 2.4 kb/s 4.8 kb/s 9.6 kb/s 19.2 kb/s 38.4 kb/s 57.6 kb/s 76.8 kb/s	**1.2, 2.4, 4.8, 9.6, 19.2, 38.4, 57.6, 76.8 kb/s**
5304	**EFB PARITY** Defines the data length parity and stop bits to be used with the RS485 link communication. • The same settings must be used in all on-line stations. 0 = 8 NONE 1 – 8 data bits, no parity, one stop bit. 1 = 8 NONE 2 – 8 data bits, no parity, two stop bits. 2 = 8 EVEN 1 – 8 data bits, even parity, one stop bit. 3 = 8 ODD 1 – 8 data bits, odd parity, one stop bit.	**0…3**
5305	**EFB CTRL PROFILE** Selects the communication profile used by the EFB protocol. 0 = ABB DRV LIM – Operation of the Control Word and Status Word conforms to ABB Drives Profile, as used in ACS400. 1 = DCU PROFILE – Operation of Control/Status Words conforms to 32-bit DCU Profile. 2 = ABB DRV FULL – Operation of Control/Status Words conforms to ABB Drives Profile, as used in ACS600/800.	**0…2**
5306	**EFB OK MESSAGES** Contains a count of valid messages received by the drive. • During normal operation, this counter is increasing constantly.	**0…65535**

Code	Description	Range
5307	**EFB CRC ERRORS** Contains a count of the messages with a CRC error received by the drive. For high counts, check: • Ambient electro-magnetic noise levels – high noise levels generate errors. • CRC calculations for possible errors.	**0…65535**
5308	**EFB UART ERRORS** Contains a count of the messages with a character error received by the drive.	**0…65535**
5309	**EFB STATUS** Contains the status of the EFB protocol. 0 = IDLE – EFB protocol is configured, but not receiving any messages. 1 = EXECUT INIT – EFB protocol is initializing. 2 = TIME OUT – A time-out has occurred in the communication between the network master and the EFB protocol. 3 = CONFIG ERROR – EFB protocol has a configuration error. 4 = OFF-LINE – EFB protocol is receiving messages that are NOT addressed to this drive. 5 = ON-LINE – EFB protocol is receiving messages that are addressed to this drive. 6 = RESET – EFB protocol is performing a hardware reset. 7 = LISTEN ONLY – EFB protocol is in listen-only mode.	**0…7**
5310	**EFB PAR 10** Protocol specific. See manuals *Embedded Fieldbus (EFB) Control* [3AFE68320658 (English)] and *BACnet Protocol* [3AUA0000004591 (English)]	**0…65535**
5311	**EFB PAR 11** See parameter 5310.	**0…65535**
5312	**EFB PAR 12** See parameter 5310.	**0…65535**
5313	**EFB PAR 13** See parameter 5310.	**0…65535**
5314	**EFB PAR 14** See parameter 5310.	**0…65535**
5315	**EFB PAR 15** See parameter 5310.	**0…65535**
5316	**EFB PAR 16** See parameter 5310.	**0…65535**
5317	**EFB PAR 17** See parameter 5310.	**0…65535**

Code	Description	Range
5318	**EFB PAR 18** See parameter 5310.	**0…65535**
5319 … 5320	**EFB PAR 19…EFB PAR 20** Reserved.	**0…65535**

Group 81: PFA CONTROL

This group defines a Pump and Fan Alternation (PFA) mode of operation. The major features of PFA are:

- The ACH550 controls the motor of pump 1, varying the motor speed to control the pump capacity. This motor is the speed regulated motor.
- Direct line connections power the motor of pump 2 and pump 3, etc. The ACH550 switches pump 2 (and then pump 3, etc.) on and off as needed. These motors are auxiliary motors.
- The ACH550 PID control uses two signals: a process reference and an actual value feedback. The PID controller adjusts the speed (frequency) of the first pump so that the actual value follows the process reference.
- When demand (defined by the process reference) exceeds the first motor’s capacity (user defined as a frequency limit), the PFA automatically starts an auxiliary pump. The PFA also reduces the speed of the first pump to account for the auxiliary pump’s addition to total output. Then, as before, the PID controller adjusts the speed (frequency) of the first pump so that the actual value follows the process reference. If demand continues to increase, PFA adds additional auxiliary pumps, using the same process.
- When demand drops, so that the first pump speed falls below a minimum limit (user defined by a frequency limit), the PFA automatically stops an auxiliary pump. The PFA also increases the speed of the first pump to account for the auxiliary pump’s missing output.
- An Interlock function (when enabled) identifies off-line (out of service) motors, and the PFA skips to the next available motor in the sequence.
- An Autochange function (when enabled and with the appropriate switchgear) equalizes duty time between the pump motors. Autochange periodically increments the position of each motor in the rotation – the speed-regulated motor becomes the last auxiliary motor, the first auxiliary motor becomes the speed regulated motor, etc.

Code	Description	Range
8103	**REFERENCE STEP 1** Sets a percentage value that is added to the process reference. • Applies only when at least one auxiliary (constant speed) motor is running. • Default value is 0%. **Example:** An ACH550 operates three parallel pumps that maintain water pressure in a pipe. • 4011 INTERNAL SETPNT sets a constant pressure reference that controls the pressure in the pipe. • The speed regulated pump operates alone at low water consumption levels. • As water consumption increases, the first auxiliary (constant speed) pump starts to operate, then the second one. • As flow increases, the pressure at the output end of the pipe drops relative to the pressure measured at the input end. As auxiliary motors step in to increase the flow, the adjustments below correct the reference to more closely match the output pressure. • When the first auxiliary pump operates, increase the reference with parameter 8103 REFERENCE STEP 1. • When two auxiliary pumps operate, increase the reference with parameter 8103 REFERENCE STEP 1 + parameter 8104 REFERENCE STEP 2. • When three auxiliary pumps operate, increase the reference with parameter 8103 REFERENCE STEP 1 + parameter 8104 REFERENCE STEP 2 + parameter 8105 REFERENCE STEP 3.	**0.0…100%**
8104	**REFERENCE STEP 2** Sets a percentage value that is added to the process reference. • Applies only when at least two auxiliary (constant speed) motors are running. • See parameter 8103 REFERENCE STEP1.	**0.0…100%**
8105	**REFERENCE STEP 3** Sets a percentage value that is added to the process reference. • Applies only when at least three auxiliary (constant speed) motors are running. • See parameter 8103 REFERENCE STEP1.	**0.0…100%**

Code	Description	Range
8109	**START FREQ 1**	**0.0…500 Hz**

Sets the frequency limit used to start the first auxiliary motor. The first auxiliary motor starts if:

- no auxiliary motors are running.
- ACH550 output frequency exceeds the limit: 8109 + 1 Hz.
- output frequency stays above a relaxed limit (8109 - 1 Hz) for at least the time: 8115 AUX MOT START D.

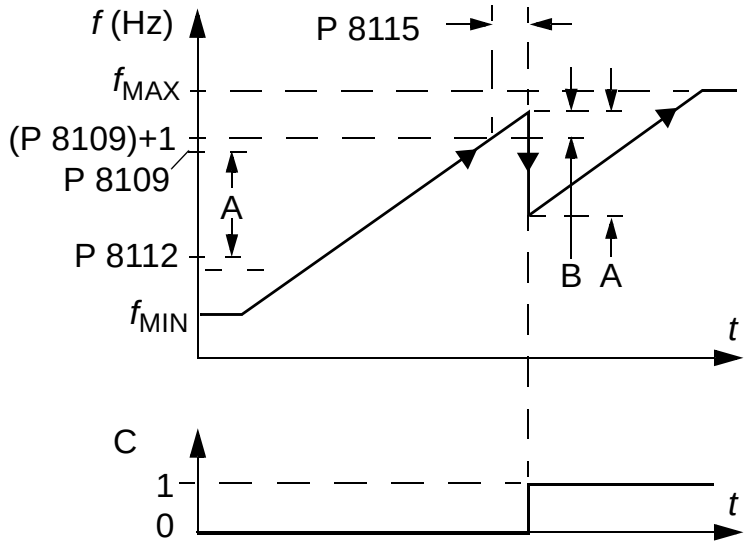

After the first auxiliary motor starts:

- Output frequency decreases by the value (8109 START FREQ 1) - (8112 LOW FREQ 1).
- In effect, the output of the speed regulated motor drops to compensate for the input from the auxiliary motor.

See figure, where:

- A = (8109 START FREQ 1) - (8112 LOW FREQ 1)
- B = Output frequency increase during the start delay.
- C = Diagram showing auxiliary motor’s run status as frequency increases (1 = On).

Note: 8109 START FREQ 1 value must be between:

- 8112 LOW FREQ 1
- (2008 MAXIMUM FREQ) -1.

8110	**START FREQ 2**	**0.0…500 Hz**

Sets the frequency limit used to start the second auxiliary motor.

- See 8109 START FREQ 1 for a complete description of the operation.

The second auxiliary motor starts if:

- one auxiliary motor is running.
- ACH550 output frequency exceeds the limit 8110 + 1.
- output frequency stays above the relaxed limit (8110 - 1 Hz) for at least the time 8115 AUX MOT START D.

Code	Description	Range
8111	**START FREQ 3**	**0.0…500 Hz**
	Sets the frequency limit used to start the third auxiliary motor. • See 8109 START FREQ 1 for a complete description of the operation. The third auxiliary motor starts if: • two auxiliary motors are running. • ACH550 output frequency exceeds the limit 8111 + 1 Hz. • output frequency stays above the relaxed limit (8111 - 1 Hz) for at least the time 8115 AUX MOT START D.	
8112	**LOW FREQ 1**	**0.0…500 Hz**
	Sets the frequency limit used to stop the first auxiliary motor. The first auxiliary motor stops if: • the first auxiliary motor is running alone. • ACH550 output frequency drops below the limit: 8112 - 1. • output frequency stays below the relaxed limit (8112 + 1 Hz) for at least the time: 8116 AUX MOT STOP D. 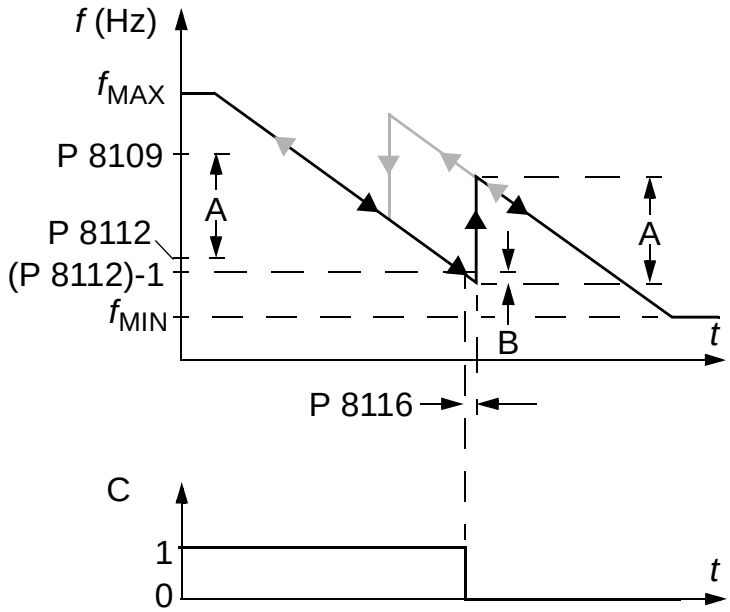 After the first auxiliary motor stops: • Output frequency increases by the value (8109 START FREQ 1) - (8112 LOW FREQ 1). • In effect, the output of the speed regulated motor increases to compensate for the loss of the auxiliary motor. See figure, where: • A = (8109 START FREQ 1) - (8112 LOW FREQ 1) • B = Output frequency decrease during the stop delay. • C = Diagram showing auxiliary motor's run status as frequency decreases (1 = On). • Grey path = Shows hysteresis – if time is reversed, the path backwards is not the same. For details on the path for starting, see the diagram at 8109 START FREQ 1. **Note:** 8112 LOW FREQ 1 value must be between: • (2007 MINIMUM FREQ) +1 and 8109 START FREQ 1	

Code	Description	Range
8113	**LOW FREQ 2** Sets the frequency limit used to stop the second auxiliary motor. • See 8112 LOW FREQ 1 for a complete description of the operation. The second auxiliary motor stops if: • two auxiliary motors are running. • ACH550 output frequency drops below the limit 8113 - 1. • output frequency stays below the relaxed limit (8113 + 1 Hz) for at least the time 8116 AUX MOT STOP D.	**0.0…500 Hz**
8114	**LOW FREQ 3** Sets the frequency limit used to stop the third auxiliary motor. • See 8112 LOW FREQ 1 for a complete description of the operation. The third auxiliary motor stops if: • three auxiliary motors are running. • ACH550 output frequency drops below the limit: 8114 - 1. • output frequency stays below the relaxed limit (8114 + 1 Hz) for at least the time 8116 AUX MOT STOP D.	**0.0…500 Hz**
8115	**AUX MOT START D** Sets the Start Delay for the auxiliary motors. • The output frequency must remain above the start frequency limit (parameter 8109, 8110 or 8111) for this time period before the auxiliary motor starts. • See 8109 START FREQ 1 for a complete description of the operation.	**0.0…3600 s**
8116	**AUX MOT STOP D** Sets the Stop Delay for the auxiliary motors. • The output frequency must remain below the low frequency limit (parameter 8112, 8113 or 8114) for this time period before the auxiliary motor stops. • See 8112 LOW FREQ 1 for a complete description of the operation.	**0.0…3600 s**

Code	Description	Range
8117	**NR OF AUX MOT**	**0…4**

Sets the number of auxiliary motors.

- Each auxiliary motor requires a relay output, which the drive uses to send start/stop signals.
- The Autochange function, if used, requires an additional relay output for the speed regulated motor.

The following describes the set-up of the required relay outputs.

Relay outputs

As noted above, each auxiliary motor requires a relay output, which the drive uses to send start/stop signals. The following describes how the drive keeps track of motors and relays.

- The ACH550 provides relay outputs RO1…RO3.
- An external digital output module can be added to provide relay outputs RO4…RO6.
- Parameters 1401…1403 and 1410…1412 define, respectively, how relays RO1…RO6 are used – the parameter value 31 (PFA) defines the relay as used for PFA.
- The ACH550 assigns auxiliary motors to relays in ascending order. If the Autochange function is disabled, the first auxiliary motor is the one connected to the first relay with a parameter setting = 31 (PFA), and so on. If the Autochange function is used, the assignments rotate. Initially, the speed regulated motor is the one connected to the first relay with the parameter setting = 31 (PFA), the first auxiliary motor is the one connected to the second relay with a parameter setting = 31 (PFA), and so on.
- The fourth auxiliary motor uses the same reference step, low frequency and start frequency values as the third auxiliary motor.

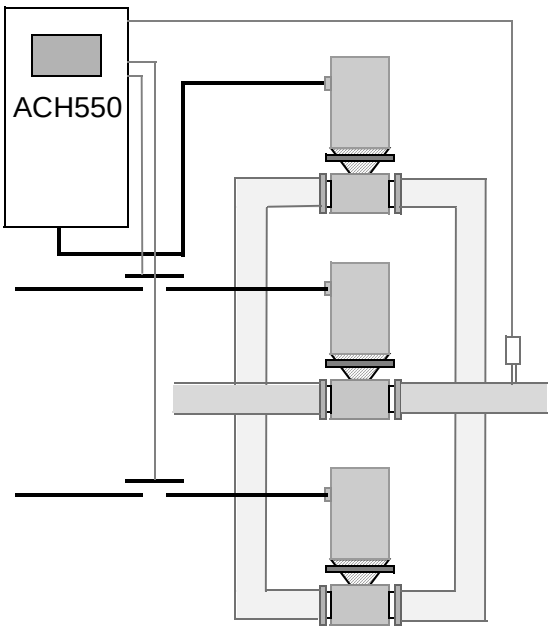

Standard PFA mode

Code	Description	Range

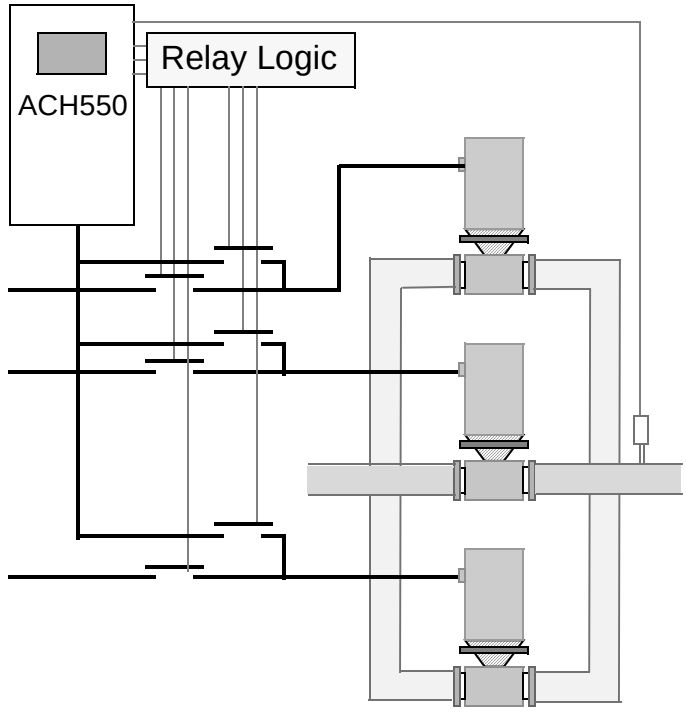

PFA with Autochange mode

The table below shows the ACH550 PFA motor assignments for some typical settings in the Relay Output parameters (1401…1403 and 1410…1412), where the settings are either = 31 (PFA), or = X (anything but 31), and where the Autochange function is disabled (8118 AUTOCHNG INTERV = 0).

Parameter setting							ACH550 relay assignment					
							Autochange disabled					
1401	1402	1403	1410	1411	1412	8117	RO1	RO2	RO3	RO4	RO5	RO6
31	X	X	X	X	X	1	Aux.	X	X	X	X	X
31	31	X	X	X	X	2	Aux.	Aux.	X	X	X	X
31	31	31	X	X	X	3	Aux.	Aux.	Aux.	X	X	X
X	31	31	X	X	X	2	X	Aux.	Aux.	X	X	X
X	X	X	31	X	31	2	X	X	X	Aux.	X	Aux.
31	31	X	X	X	X	1*	Aux.	Aux.	X	X	X	X

* One additional relay output for the PFA that is in use. One motor is in “sleep” when the other is rotating.

Code	Description	Range
	The table below shows the ACH550 PFA motor assignments for some typical settings in the Relay Output parameters (1401…1403 and 1410…1412), where the settings are either = 31 (PFA), or = X (anything but 31), and where the Autochange function is enabled (8118 AUTOCHNG INTERV = value > 0).	

Parameter setting							ACH550 relay assignment					
							Autochange enabled					
1401	1402	1403	1410	1411	1412	8117	RO1	RO2	RO3	RO4	RO5	RO6
31	31	X	X	X	X	1	PFA	PFA	X	X	X	X
31	31	31	X	X	X	2	PFA	PFA	PFA	X	X	X
x	31	31	X	X	X	1	X	PFA	PFA	X	X	X
X	X	X	31	X	31	1	X	X	X	PFA	X	PFA
31	31	X	X	X	X	0**	PFA	PFA	X	X	X	X

** No auxiliary motors, but the autochange function is in use. Working as standard PID control.

Code	Description	Range
8118	**AUTOCHNG INTERV**	**0.0…336 h**

Controls operation of the Autochange function and sets the interval between changes.

- The Autochange time interval only applies to the time when the speed regulated motor is running.
- See parameter 8119 AUTOCHNG LEVEL for an overview of the Autochange function.
- The drive always coasts to stop when autochange is performed.
- Autochange enabled requires parameter 8120 INTERLOCKS = value > 0.

-0.1 = TEST MODE – Forces the interval to value 36…48 s.
0.0 = NOT SEL – Disables the Autochange function.
0.1…336 – The operating time interval (the time when the start signal is on) between automatic motor changes.

WARNING! When enabled, the Autochange function requires the interlocks (8120 interlocks = value > 0) enabled. During autochange the power output is interrupted and the drive coasts to stop, preventing damage to the contacts.

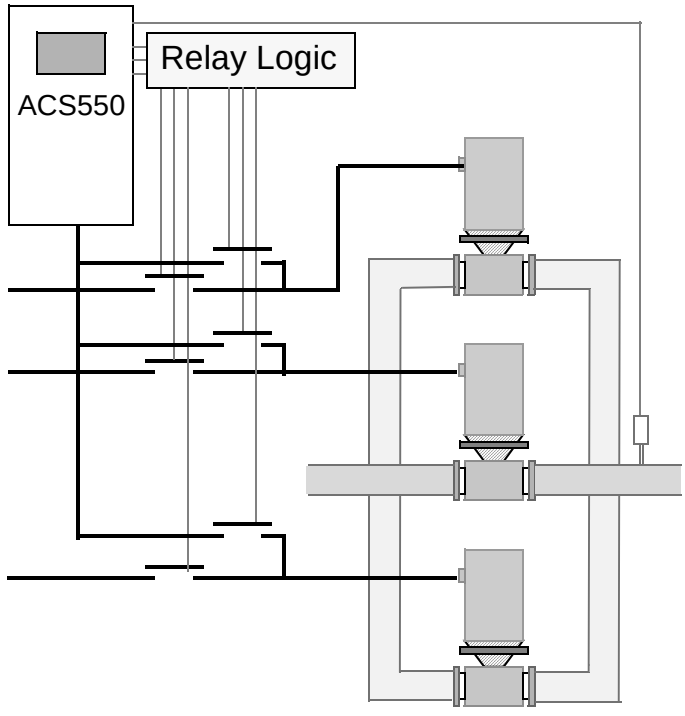

PFA with Autochange mode

Code	Description	Range
8119	**AUTOCHNG LEVEL** Sets an upper limit, as a percentage of output capacity, for the autochange logic. When the output from the PID/PFA control block exceeds this limit, autochange is prevented. For example, use this parameter to deny autochange when the Pump-Fan system is operating near maximum capacity. **Autochange overview** The purpose of the autochange operation is to equalize duty time between multiple motors used in a system. At each autochange operation: • A different motor takes a turn connected to the ACH550 output – the speed regulated motor. • The starting order of the other motors rotates. The Autochange function requires: • external switchgear for changing the drive's output power connections. • parameter 8120 INTERLOCKS = value > 0. Autochange is performed when: • The running time since the previous autochange reaches the time set by parameter 8118 AUTOCHNG INTERV. • the PFA input is below the level set by parameter 8119 AUTOCHNG LEVEL.	**0.0…100.0%**

Code	Description	Range
	Note: The ACH550 always coasts to stop when autochange is performed. In an autochange, the Autochange function does all of the following (see the figure): 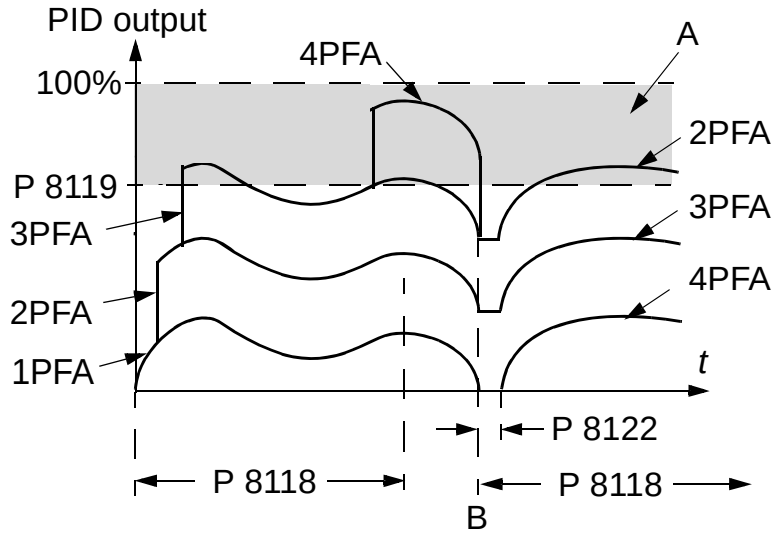 A = Area above 8119 AUTOCHNG LEVEL – autochange not allowed. B = Autochange occurs. 1PFA, etc. = PID output associated with each motor. • Initiates a change when the running time, since the last autochange, reaches 8118 AUTOCHNG INTERV and PFA input is below limit 8119 AUTOCHNG LEVEL. • Stops the speed regulated motor. • Switches off the contactor of the speed regulated motor. • Increments the starting order counter, to change the starting order for the motors. • Identifies the next motor in line to be the speed regulated motor. • Switches off the above motor's contactor if the motor was running. Any other running motors are not interrupted. • Switches on the contactor of the new speed regulated motor. The autochange switchgear connects this motor to the ACH550 power output. • Delays motor start for the time 8122 PFA START DELAY. • Starts the speed regulated motor. • Identifies the next constant speed motor in the rotation. • Switches the above motor on, but only if the new speed regulated motor had been running (as a constant speed motor) – This step keeps an equal number of motors running before and after autochange. • Continues with normal PFA operation.	

Code	Description	Range
	Starting order counter The operation of the starting order counter: • The relay output parameter definitions (1401…1403 and 1410…1412) establish the initial motor sequence. (The lowest parameter number with a value 31 (PFA) identifies the relay connected to 1PFA, the first motor, and so on.) • Initially, 1PFA = speed regulated motor, 2PFA = 1st auxiliary motor, etc. • The first autochange shifts the sequence to: 2PFA = speed regulated motor, 3PFA = 1st auxiliary motor, …, 1PFA = last auxiliary motor. • The next autochange shifts the sequence again, and so on. • If the autochange cannot start a needed motor because all inactive motors are interlocked, the drive displays an alarm (2015, PFA I LOCK). • When the ACH550 power supply is switched off, the counter preserves the current Autochange rotation positions in permanent memory. When power is restored, the Autochange rotation starts at the position stored in memory. • If the PFA relay configuration is changed (or if the PFA enable value is changed), the rotation is reset. (See the first bullet above.)	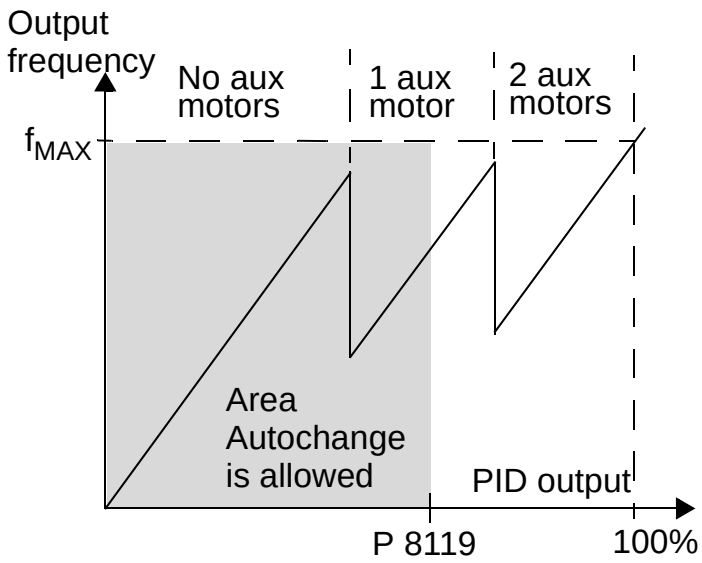

Code	Description	Range
8120	**INTERLOCKS** Defines operation of the Interlock function. When the Interlock function is enabled: • An interlock is active when its command signal is absent. • An interlock is inactive when its command signal is present. • The ACH550 will not start if a start command occurs when the speed regulated motor's interlock is active – the control panel displays an alarm (2015, PFA I LOCK). Wire each Interlock circuit as follows: • Wire a contact of the motor's On/Off switch to the Interlock circuit – the drive's PFA logic can then recognize that the motor is switched off and start the next available motor. • Wire a contact of the motor thermal relay (or other protective device in the motor circuit) to the Interlock input – the drive's PFA logic can then recognize that a motor fault is activated and stop the motor. 0 = NOT SEL – Disables the Interlock function. All digital inputs are available for other purposes. • Requires 8118 AUTOCHNG INTERV = 0 (The Autochange function must be disabled if Interlock function is disabled.)	**0…6**

Code	Description	Range
	1 = DI1 – Enables the Interlock function, and assigns a digital input (starting with DI1) to the interlock signal for each PFA relay. These assignments are defined in the following table and depend on: • the number of PFA relays [number of parameters 1401…1403 and 1410…1412 with value = 31 (PFA)] • the Autochange function status (disabled if 8118 AUTOCHNG INTERV = 0, and otherwise enabled).	

No. PFA relays	Autochange disabled (P 8118)	Autochange enabled (P 8118)
0	DI1: Speed Reg Motor DI2…DI6: Free	Not allowed
1	DI1: Speed Reg Motor DI2: First PFA Relay DI3…DI6: Free	DI1: First PFA Relay DI2…DI6: Free
2	DI1: Speed Reg Motor DI2: First PFA Relay DI3: Second PFA Relay DI4…DI6: Free	DI1: First PFA Relay DI2: Second PFA Relay DI3…DI6: Free
3	DI1: Speed Reg Motor DI2: First PFA Relay DI3: Second PFA Relay DI4: Third PFA Relay DI5…DI6: Free	DI1: First PFA Relay DI2: Second PFA Relay DI3: Third PFA Relay DI4…DI6: Free
4	DI1: Speed Reg Motor DI2: First PFA Relay DI3: Second PFA Relay DI4: Third PFA Relay DI5: Fourth PFA Relay DI6: Free	DI1: First PFA Relay DI2: Second PFA Relay DI3: Third PFA Relay DI4: Fourth PFA Relay DI5…DI6: Free
5	DI1: Speed Reg Motor DI2: First PFA Relay DI3: Second PFA Relay DI4: Third PFA Relay DI5: Fourth PFA Relay DI6: Fifth PFA Relay	DI1: First PFA Relay DI2: Second PFA Relay DI3: Third PFA Relay DI4: Fourth PFA Relay DI5: Fifth PFA Relay DI6: Free
6	Not allowed	DI1: First PFA Relay DI2: Second PFA Relay DI3: Third PFA Relay DI4: Fourth PFA Relay DI5: Fifth PFA Relay DI6: Sixth PFA Relay

Code	Description	Range
	2 = DI2 – Enables the Interlock function, and assigns a digital input (starting with DI2) to the interlock signal for each PFA relay. These assignments are defined in the following table and depend on: • the number of PFA relays [number of parameters 1401…1403 and 1410…1412 with value = 31 (PFA)] • the Autochange function status (disabled if 8118 AUTOCHNG INTERV = 0, and otherwise enabled).	

No. PFA relays	Autochange disabled (P 8118)	Autochange enabled (P 8118)
0	DI1: Free DI2: Speed Reg Motor DI3…DI6: Free	Not allowed
1	DI1: Free DI2: Speed Reg Motor DI3: First PFA Relay DI4…DI6: Free	DI1: Free DI2: First PFA Relay DI3…DI6: Free
2	DI1: Free DI2: Speed Reg Motor DI3: First PFA Relay DI4: Second PFA Relay DI5…DI6: Free	DI1: Free DI2: First PFA Relay DI3: Second PFA Relay DI4…DI6: Free
3	DI1: Free DI2: Speed Reg Motor DI3: First PFA Relay DI4: Second PFA Relay DI5: Third PFA Relay DI6: Free	DI1: Free DI2: First PFA Relay DI3: Second PFA Relay DI4: Third PFA Relay DI5…DI6: Free
4	DI1: Free DI2: Speed Reg Motor DI3: First PFA Relay DI4: Second PFA Relay DI5: Third PFA Relay DI6: Fourth PFA Relay	DI1: Free DI2: First PFA Relay DI3: Second PFA Relay DI4: Third PFA Relay DI5: Fourth PFA Relay DI6: Free
5	Not allowed	DI1: Free DI2: First PFA Relay DI3: Second PFA Relay DI4: Third PFA Relay DI5: Fourth PFA Relay DI6: Fifth PFA Relay
6	Not allowed	Not allowed

Code	Description	Range
	3 = DI3 – Enables the Interlocks function, and assigns a digital input (starting with DI3) to the interlock signal for each PFA relay. These assignments are defined in the following table and depend on: • the number of PFA relays [number of parameters 1401…1403 and 1410…1412 with value = 31 (PFA)] • the Autochange function status (disabled if 8118 AUTOCHNG INTERV = 0, and otherwise enabled).	

No. PFA relays	Autochange disabled (P 8118)	Autochange enabled (P 8118)
0	DI1…DI2: Free DI3: Speed Reg Motor DI4…DI6: Free	Not allowed
1	DI1…DI2: Free DI3: Speed Reg Motor DI4: First PFA Relay DI5…DI6: Free	DI1…DI2: Free DI3: First PFA Relay DI4…DI6: Free
2	DI1…DI2: Free DI3: Speed Reg Motor DI4: First PFA Relay DI5: Second PFA Relay DI6: Free	DI1…DI2: Free DI3: First PFA Relay DI4: Second PFA Relay DI5…DI6: Free
3	DI1…DI2: Free DI3: Speed Reg Motor DI4: First PFA Relay DI5: Second PFA Relay DI6: Third PFA Relay	DI1…DI2: Free DI3: First PFA Relay DI4: Second PFA Relay DI5: Third PFA Relay DI6: Free
4	Not allowed	DI1…DI2: Free DI3: First PFA Relay DI4: Second PFA Relay DI5: Third PFA Relay DI6: Fourth PFA Relay
5…6	Not allowed	Not allowed

Code	Description	Range
	4 = DI4 – Enables the Interlock function, and assigns a digital input (starting with DI4) to the interlock signal for each PFA relay. These assignments are defined in the following table and depend on: • the number of PFA relays [number of parameters 1401…1403 and 1410…1412 with value = 31 (PFA)] • the Autochange function status (disabled if 8118 AUTOCHNG INTERV = 0, and otherwise enabled).	

No. PFA relays	Autochange disabled (P 8118)	Autochange enabled (P 8118)
0	DI1…DI3: Free DI4: Speed Reg Motor DI5…DI6: Free	Not allowed
1	DI1…DI3: Free DI4: Speed Reg Motor DI5: First PFA Relay DI6: Free	DI1…DI3: Free DI4: First PFA Relay DI5…DI6: Free
2	DI1…DI3: Free DI4: Speed Reg Motor DI5: First PFA Relay DI6: Second PFA Relay	DI1…DI3: Free DI4: First PFA Relay DI5: Second PFA Relay DI6: Free
3	Not allowed	DI1…DI3: Free DI4: First PFA Relay DI5: Second PFA Relay DI6: Third PFA Relay
4…6	Not allowed	Not allowed

Code	Description	Range
	5 = DI5 – Enables the Interlock function, and assigns a digital input (starting with DI5) to the interlock signal for each PFA relay. These assignments are defined in the following table and depend on: • the number of PFA relays [number of parameters 1401…1403 and 1410…1412 with value = 31 (PFA)] • the Autochange function status (disabled if 8118 AUTOCHNG INTERV = 0, and otherwise enabled).	

No. PFA relays	Autochange disabled (P 8118)	Autochange enabled (P 8118)
0	DI1…DI4: Free DI5: Speed Reg Motor DI6: Free	Not allowed
1	DI1…DI4: Free DI5: Speed Reg Motor DI6: First PFA Relay	DI1…DI4: Free DI5: First PFA Relay DI6: Free
2	Not allowed	DI1…DI4: Free DI5: First PFA Relay DI6: Second PFA Relay
3…6	Not allowed	Not allowed

6 = DI6 – Enables the Interlock function, and assigns digital input DI6 to the interlock signal for the speed regulated motor.
• Requires 8118 AUTOCHNG INTERV = 0.

No. PFA relays	Autochange disabled	Autochange enabled
0	DI1…DI5: Free DI6: Speed Reg Motor	Not allowed
1	Not allowed	DI1…DI5: Free DI6: First PFA Relay
2…6	Not allowed	Not allowed

Code	Description	Range
8121	**REG BYPASS CTRL**	**0=NO, 1=YES**

Selects Regulator by-pass control. When enabled, Regulator by-pass control provides a simple control mechanism without a PID regulator.

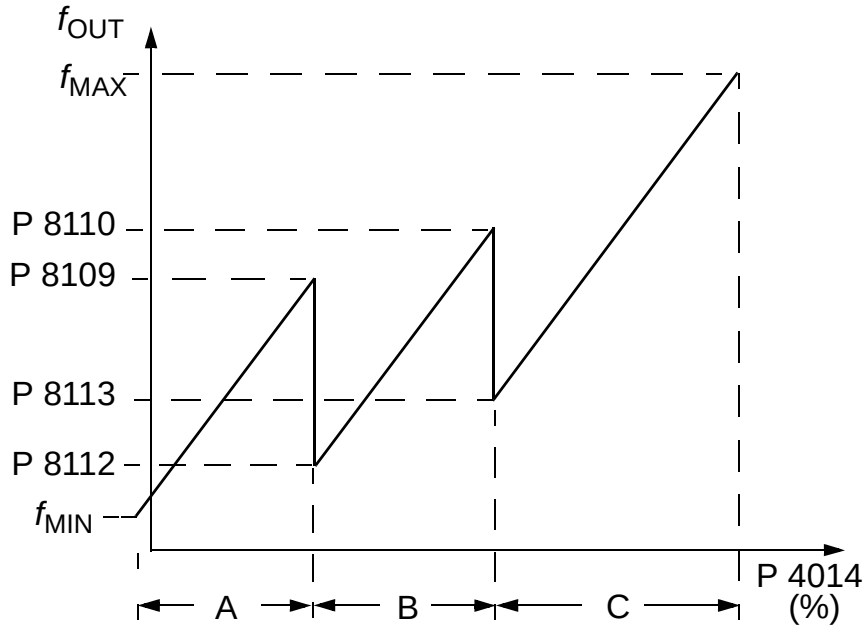

A = No auxiliary motors running
B = One auxiliary motor running
C = Two auxiliary motors running

- Use Regulator by-pass control only in special applications.

0 = NO – Disables Regulator by-pass control. The drive uses the normal PFA reference 1106 REF2 SELECT.

1 = YES – Enables Regulator by-pass control.
- The process PID regulator is bypassed.
  Actual value of PID is used as the PFA reference (input). Normally EXT REF2 is used as the PFA reference.
- The drive uses the feedback signal defined by 4014 FBK SEL (or 4114) for the PFA frequency reference.
- The figure shows the relation between the control signal 4014 FBK SEL (OR 4114) and the speed regulated motor's frequency in a three-motor system.

Example: In the diagram below, the pumping station's outlet flow is controlled by the measured inlet flow (A).

Code	Description	Range
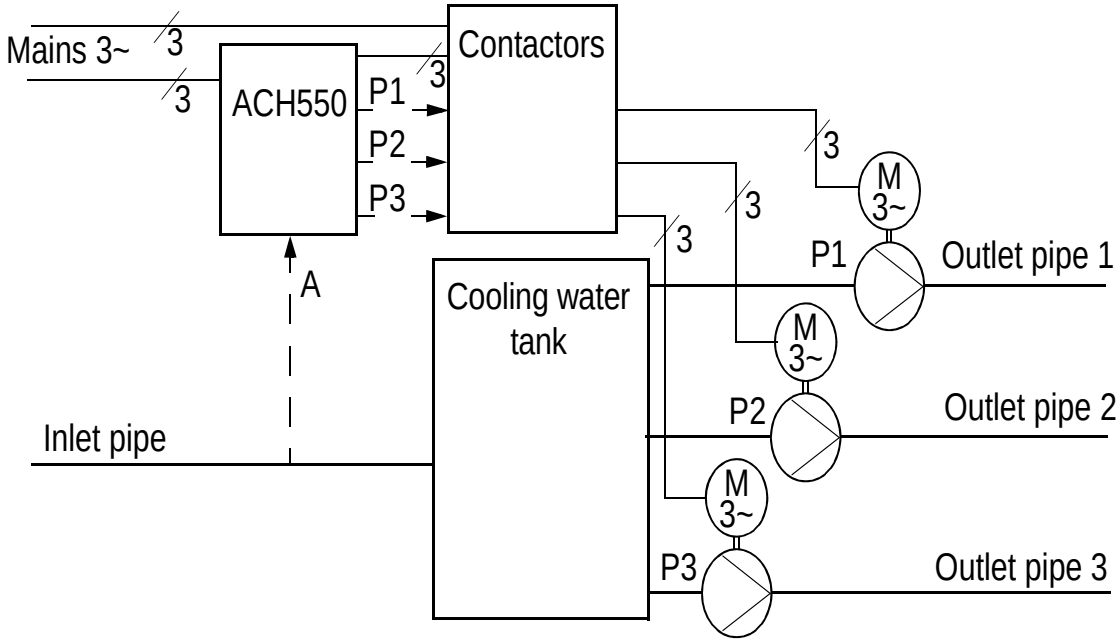		
8122	**PFA START DELAY**	**0…10 s**
	Sets the start delay for speed regulated motors in the system. Using the delay, the drive works as follows: • Switches on the contactor of the speed regulated motor – connecting the motor to the ACH550 power output. • Delays motor start for the time 8122 PFA START DELAY. • Starts the speed regulated motor. • Starts auxiliary motors. See parameter 8115 for delay. ⚠ **WARNING!** Motors equipped with star-delta starters require a PFA Start Delay. • After the ACH550 relay output switches a motor On, the star-delta starter must switch to the star-connection and then back to the delta-connection before the drive applies power. • Thus, the PFA Start Delay must be longer than the time setting of the star-delta starter.	

8

Code	Description	Range
8123	**PFA ENABLE** Selects PFA control. When enabled, PFA control: • Switches in, or out, auxiliary constant speed motors as output demand increases or decreases. Parameters 8109 START FREQ 1 to 8114 LOW FREQ 3 define the switch points in terms of the drive output frequency. • Adjusts the speed regulated motor output down, as auxiliary motors are added, and adjusts the speed regulated motor output up, as auxiliary motors are taken off line. • Provides Interlock functions, if enabled. • Requires 9904 MOTOR CTRL MODE = 3 (SCALAR:FREQ). 0 = NOT SEL – Disables PFA control. 1 = ACTIVE – Enables PFA control.	**0=NOT SEL, 1=ACTIVE**

Code	Description	Range
8124	**ACC IN AUX STOP**	**0.0…1800 s**

Sets the PFA acceleration time for a zero-to-maximum frequency ramp. This PFA acceleration ramp:
- applies to the speed regulated motor, when an auxiliary motor is switched off.
- replaces the acceleration ramp defined in *Group 22: ACCEL/DECEL*.
- applies only until the output of the regulated motor increases by an amount equal to the output of the switched off auxiliary motor. Then the acceleration ramp defined in *Group 22: ACCEL/DECEL* applies.

0 = NOT SEL

0.1…1800 – Activates this function using the value entered as the acceleration time.

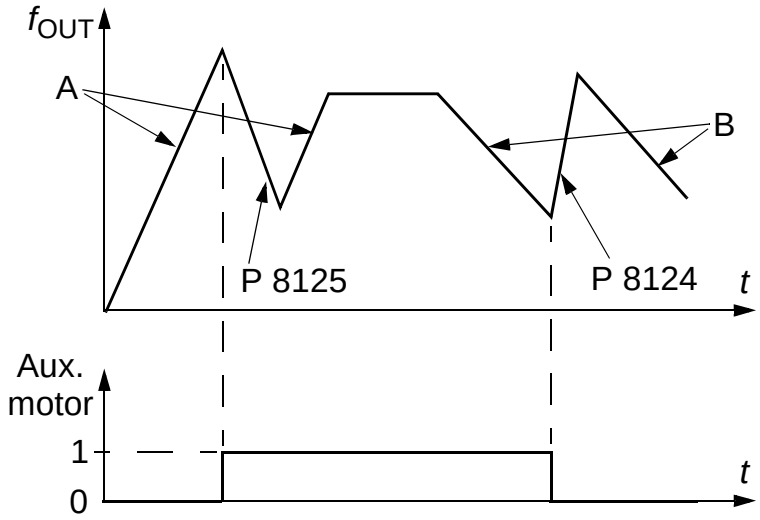

- A = speed regulated motor accelerating using *Group 22: ACCEL/DECEL* parameters (2202 or 2205).
- B = speed regulated motor decelerating using *Group 22: ACCEL/DECEL* parameters (2203 or 2206).
- At aux. motor start, speed regulated motor decelerates using 8125 DEC IN AUX START.
- At aux. motor stop, speed regulated motor accelerates using 8124 ACC IN AUX STOP.

8125	**DEC IN AUX START**	**0.0…1800 s**

Sets the PFA deceleration time for a maximum-to-zero frequency ramp. This PFA deceleration ramp:
- applies to the speed regulated motor when an auxiliary motor is switched on.
- replaces the deceleration ramp defined in *Group 22: ACCEL/DECEL*.
- applies only until the output of the regulated motor decreases by an amount equal to the output of the auxiliary motor. Then the deceleration ramp defined in *Group 22: ACCEL/DECEL* applies.

0 = NOT SEL.

0.1…1800 – Activates this function using the value entered as the deceleration time.

Code	Description	Range
8126	**TIMED AUTOCHANGE** Sets the autochange with timer. When enables, autochange is controlled with the timed functions. 0 = NOT SEL. 1 = TIMER 1 – Enables autochange when timer 1 is active. 2…4 = TIMER 2…4 – Enables autochange when timer 2…4 is active.	**0…4**
8127	**MOTORS** Sets the actual number of PFA controlled motors (maximum 7 motors, 1 speed regulated, 3 connected direct-on-line and 3 spare motors). • This value includes also the speed regulated motor. • This value must be compatible with the number of relays allocated to PFA if the Autochange function is used. • If Autochange function is not used, the speed regulated motor does not need to have a relay output allocated to PFA but it needs to be included in this value.	**1…7**
8128	**AUX START ORDER** Sets the start order of the auxiliary motors. 1 = EVEN RUNTIME – Time sharing is active. The start order depends on the run times. 2 = RELAY ORDER – The start order is fixed to be the order of the relays.	**1=EVEN RUNTIME** **2=RELAY ORDER**

Group 98: OPTIONS

This group configures for options, in particular, enabling serial communication with the drive.

Code	Description	Range
9802	**COMM PROT SEL** Selects the communication protocol. 0 = NOT SEL – No communication protocol selected. 1 = STD MODBUS – The drive communicates via a Modbus controller via the RS485 serial link (X1 communications, terminal). 2 = N2 – The drive communicates via an N2 controller via the RS485 serial link (X1 communications, terminal). • See also parameter *Group 53: EFB PROTOCOL*. 3 = FLN – The drive communicates via an FLN controller via the RS485 serial link (X1 communications, terminal). • See also parameter *Group 53: EFB PROTOCOL*. 4 = EXT FBA – The drive communicates via a fieldbus adapter module in option slot 2 of the drive. • See also parameter *Group 51: EXT COMM MODULE*. 5 = BACNET – The drive communicates via a BACnet controller via the RS485 serial link (X1 communications, terminal). • See also parameter *Group 53: EFB PROTOCOL*.	**0…5**

Complete parameter list

The following table lists all parameters and their default values for all application macros. The user can enter desired parameter values under the "User" column.

	Parameter name	Par. index	HVAC default 1	Supply fan 2	Return fan 3	Cooling tower fan 4	Condenser 5	Booster pump 6
99 START-UP DATA	LANGUAGE	9901	ENGLISH	ENGLISH	ENGLISH	ENGLISH	ENGLISH	ENGLISH
	APPLIC MACRO	9902	HVAC DEFAULT	SUPPLY FAN	RETURN FAN	CLNG TWR FAN	CONDENSER	BOOSTER PUMP
	MOTOR CTRL MODE	9904	SCALAR: FREQ	SCALAR: FREQ	SCALAR: FREQ	SCALAR: FREQ	SCALAR: FREQ	SCALAR: FREQ
	MOTOR NOM VOLT	9905	230/400/ 460 V	230/400/ 460 V	230/400/ 460 V	230/400/ 460 V	230/400/ 460 V	230/400/ 460 V
	MOTOR NOM CURR	9906	$1.0 \cdot I_N$	$1.0 \cdot I_N$	$1.0 \cdot I_N$	$1.0 \cdot I_N$	$1.0 \cdot I_N$	$1.0 \cdot I_N$
	MOTOR NOM FREQ	9907	50/60 Hz	50/60 Hz	50/60 Hz	50/60 Hz	50/60 Hz	50/60 Hz
	MOTOR NOM SPEED	9908	1440/ 1750 rpm	1440/ 1750 rpm	1440/ 1750 rpm	1440/ 1750 rpm	1440/ 1750 rpm	1440/ 1750 rpm
	MOTOR NOM POWER	9909	$1.0 \cdot P_N$	$1.0 \cdot P_N$	$1.0 \cdot P_N$	$1.0 \cdot P_N$	$1.0 \cdot P_N$	$1.0 \cdot P_N$
	ID RUN	9910	OFF/ IDMAGN	OFF/ IDMAGN	OFF/ IDMAGN	OFF/ IDMAGN	OFF/ IDMAGN	OFF/ IDMAGN
1 OPERATING DATA	SPEED & DIR	0101	-	-	-	-	-	-
	SPEED	0102	-	-	-	-	-	-
	OUTPUT FREQ	0103	-	-	-	-	-	-
	CURRENT	0104	-	-	-	-	-	-
	TORQUE	0105	-	-	-	-	-	-
	POWER	0106	-	-	-	-	-	-
	DC BUS VOLTAGE	0107	-	-	-	-	-	-
	OUTPUT VOLTAGE	0109	-	-	-	-	-	-
	DRIVE TEMP	0110	-	-	-	-	-	-
	EXTERNAL REF 1	0111	-	-	-	-	-	-
	EXTERNAL REF 2	0112	-	-	-	-	-	-
	CTRL LOCATION	0113	-	-	-	-	-	-
	RUN TIME (R)	0114	0 h	0 h	0 h	0 h	0 h	0 h
	KWH COUNTER (R)	0115	-	-	-	-	-	-
	APPL BLK OUTPUT	0116	-	-	-	-	-	-
	DI 1-3 STATUS	0118	-	-	-	-	-	-
	DI 4-6 STATUS	0119	-	-	-	-	-	-
	AI 1	0120	-	-	-	-	-	-
	AI 2	0121	-	-	-	-	-	-
	RO 1-3 STATUS	0122	-	-	-	-	-	-

Pump alternation	Internal timer	Internal timer, c. speeds	Floating point	Dual setpoint PID	Dual setpoint PID, c. sp.	E-bypass	Hand control		
7	**8**	**9**	**10**	**11**	**12**	**13**	**14**	**Par. index**	**User**
ENGLISH	ENGLISH	ENGLISH	ENGLISH	ENGLISH	ENGLISH	ENGLISH	ENGLISH	9901	
PUMP ALTERN	INT TIMER	INT TIMER CS	FLOATING PNT	DUAL SETPNT	DUAL SPNT CS	E-BYPASS	HAND CONTROL	9902	
SCALAR: FREQ	SCALAR: FREQ	SCALAR: FREQ	SCALAR: FREQ	SCALAR: FREQ	SCALAR: FREQ	SCALAR: FREQ	SCALAR: FREQ	9904	
230/400/ 460 V	230/400/ 460 V	230/400/ 460 V	230/400/ 460 V	230/400/ 460 V	230/400/ 460 V	230/400/ 460 V	230/400/ 460 V	9905	
$1.0 \cdot I_N$	$1.0 \cdot I_N$	$1.0 \cdot I_N$	$1.0 \cdot I_N$	$1.0 \cdot I_N$	$1.0 \cdot I_N$	$1.0 \cdot I_N$	$1.0 \cdot I_N$	9906	
50/60 Hz	50/60 Hz	50/60 Hz	50/60 Hz	50/60 Hz	50/60 Hz	50/60 Hz	50/60 Hz	9907	
1440/ 1750 rpm	1440/ 1750 rpm	1440/ 1750 rpm	1440/ 1750 rpm	1440/ 1750 rpm	1440/ 1750 rpm	1440/ 1750 rpm	1440/ 1750 rpm	9908	
$1.0 \cdot P_N$	$1.0 \cdot P_N$	$1.0 \cdot P_N$	$1.0 \cdot P_N$	$1.0 \cdot P_N$	$1.0 \cdot P_N$	$1.0 \cdot P_N$	$1.0 \cdot P_N$	9909	
OFF/ IDMAGN	OFF/ IDMAGN	OFF/ IDMAGN	OFF/ IDMAGN	OFF/ IDMAGN	OFF/ IDMAGN	OFF/ IDMAGN	OFF/ IDMAGN	9910	
-	-	-	-	-	-	-	-	0101	
-	-	-	-	-	-	-	-	0102	
-	-	-	-	-	-	-	-	0103	
-	-	-	-	-	-	-	-	0104	
-	-	-	-	-	-	-	-	0105	
-	-	-	-	-	-	-	-	0106	
-	-	-	-	-	-	-	-	0107	
-	-	-	-	-	-	-	-	0109	
-	-	-	-	-	-	-	-	0110	
-	-	-	-	-	-	-	-	0111	
-	-	-	-	-	-	-	-	0112	
-	-	-	-	-	-	-	-	0113	
0 h	0 h	0 h	0 h	0 h	0 h	0 h	0 h	0114	
-	-	-	-	-	-	-	-	0115	
-	-	-	-	-	-	-	-	0116	
-	-	-	-	-	-	-	-	0118	
-	-	-	-	-	-	-	-	0119	
-	-	-	-	-	-	-	-	0120	
-	-	-	-	-	-	-	-	0121	
-	-	-	-	-	-	-	-	0122	

Parameter name	Par. index	HVAC default 1	Supply fan 2	Return fan 3	Cooling tower fan 4	Condenser 5	Booster pump 6
RO 4-6 STATUS	0123	-	-	-	-	-	-
AO 1	0124	-	-	-	-	-	-
AO 2	0125	-	-	-	-	-	-
PID 1 OUTPUT	0126	-	-	-	-	-	-
PID 2 OUTPUT	0127	-	-	-	-	-	-
PID 1 SETPNT	0128	-	-	-	-	-	-
PID 2 SETPNT	0129	-	-	-	-	-	-
PID 1 FBK	0130	-	-	-	-	-	-
PID 2 FBK	0131	-	-	-	-	-	-
PID 1 DEVIATION	0132	-	-	-	-	-	-
PID 2 DEVIATION	0133	-	-	-	-	-	-
COMM RO WORD	0134	0	0	0	0	0	0
COMM VALUE 1	0135	0	0	0	0	0	0
COMM VALUE 2	0136	0	0	0	0	0	0
PROCESS VAR 1	0137	-	-	-	-	-	-
PROCESS VAR 2	0138	-	-	-	-	-	-
PROCESS VAR 3	0139	-	-	-	-	-	-
RUN TIME	0140	0 kh	0 kh	0 kh	0 kh	0 kh	0 kh
MWH COUNTER	0141	-	-	-	-	-	-
REVOLUTION CNTR	0142	0	0	0	0	0	0
DRIVE ON TIME (HI)	0143	0	0	0	0	0	0
DRIVE ON TIME (LO)	0144	0	0	0	0	0	0
MOTOR TEMP	0145	0	0	0	0	0	0
CB TEMP	0150	-	-	-	-	-	-
INPUT KWH (R)	0151	-	-	-	-	-	-
INPUT MWH	0152	-	-	-	-	-	-
PID COMM VALUE 1	0158	-	-	-	-	-	-
PID COMM VALUE 2	0159	-	-	-	-	-	-

Pump alternation	Internal timer	Internal timer, c. speeds	Floating point	Dual setpoint PID	Dual setpoint PID, c. sp.	E-bypass	Hand control		
7	8	9	10	11	12	13	14	Par. index	User
-	-	-	-	-	-	-	-	0123	
-	-	-	-	-	-	-	-	0124	
-	-	-	-	-	-	-	-	0125	
-	-	-	-	-	-	-	-	0126	
-	-	-	-	-	-	-	-	0127	
-	-	-	-	-	-	-	-	0128	
-	-	-	-	-	-	-	-	0129	
-	-	-	-	-	-	-	-	0130	
-	-	-	-	-	-	-	-	0131	
-	-	-	-	-	-	-	-	0132	
-	-	-	-	-	-	-	-	0133	
0	0	0	0	0	0	0	0	0134	
0	0	0	0	0	0	0	0	0135	
0	0	0	0	0	0	0	0	0136	
-	-	-	-	-	-	-	-	0137	
-	-	-	-	-	-	-	-	0138	
-	-	-	-	-	-	-	-	0139	
0 kh	0 kh	0 kh	0 kh	0 kh	0 kh	0 kh	0 kh	0140	
-	-	-	-	-	-	-	-	0141	
0	0	0	0	0	0	0	0	0142	
0	0	0	0	0	0	0	0	0143	
0	0	0	0	0	0	0	0	0144	
0	0	0	0	0	0	0	0	0145	
-	-	-	-	-	-	-	-	0150	
-	-	-	-	-	-	-	-	0151	
-	-	-	-	-	-	-	-	0152	
-	-	-	-	-	-	-	-	0158	
-	-	-	-	-	-	-	-	0159	

	Parameter name	Par. index	HVAC default 1	Supply fan 2	Return fan 3	Cooling tower fan 4	Condenser 5	Booster pump 6
3 FB ACTUAL SIGNALS	FB CMD WORD 1	0301	-	-	-	-	-	-
	FB CMD WORD 2	0302	-	-	-	-	-	-
	FB STS WORD 1	0303	-	-	-	-	-	-
	FB STS WORD 2	0304	0	0	0	0	0	0
	FAULT WORD 1	0305	0	0	0	0	0	0
	FAULT WORD 2	0306	0	0	0	0	0	0
	FAULT WORD 3	0307	0	0	0	0	0	0
	ALARM WORD 1	0308	0	0	0	0	0	0
	ALARM WORD 2	0309	0	0	0	0	0	0
4 FAULT HISTORY	LAST FAULT	0401	0	0	0	0	0	0
	FAULT TIME 1	0402	0	0	0	0	0	0
	FAULT TIME 2	0403	0	0	0	0	0	0
	SPEED AT FLT	0404	0	0	0	0	0	0
	FREQ AT FLT	0405	0	0	0	0	0	0
	VOLTAGE AT FLT	0406	0	0	0	0	0	0
	CURRENT AT FLT	0407	0	0	0	0	0	0
	TORQUE AT FLT	0408	0	0	0	0	0	0
	STATUS AT FLT	0409	0	0	0	0	0	0
	DI 1-3 AT FLT	0410	0	0	0	0	0	0
	DI 4-6 AT FLT	0411	0	0	0	0	0	0
	PREVIOUS FAULT 1	0412	0	0	0	0	0	0
	PREVIOUS FAULT 2	0413	0	0	0	0	0	0
10 START/ STOP/DIR	EXT1 COMMANDS	1001	DI1	DI1	DI1	DI1	DI1	DI1
	EXT2 COMMANDS	1002	DI1	DI1	DI1	DI1	DI1	DI1
	DIRECTION	1003	FORWARD	FORWARD	FORWARD	FORWARD	FORWARD	FORWARD

Pump alternation	Internal timer	Internal timer, c. speeds	Floating point	Dual setpoint PID	Dual setpoint PID, c. sp.	E-bypass	Hand control		
7	8	9	10	11	12	13	14	Par. index	User
-	-	-	-	-	-	-	-	0301	
-	-	-	-	-	-	-	-	0302	
-	-	-	-	-	-	-	-	0303	
0	0	0	0	0	0	0	0	0304	
0	0	0	0	0	0	0	0	0305	
0	0	0	0	0	0	0	0	0306	
0	0	0	0	0	0	0	0	0307	
0	0	0	0	0	0	0	0	0308	
0	0	0	0	0	0	0	0	0309	
0	0	0	0	0	0	0	0	0401	
0	0	0	0	0	0	0	0	0402	
0	0	0	0	0	0	0	0	0403	
0	0	0	0	0	0	0	0	0404	
0	0	0	0	0	0	0	0	0405	
0	0	0	0	0	0	0	0	0406	
0	0	0	0	0	0	0	0	0407	
0	0	0	0	0	0	0	0	0408	
0	0	0	0	0	0	0	0	0409	
0	0	0	0	0	0	0	0	0410	
0	0	0	0	0	0	0	0	0411	
0	0	0	0	0	0	0	0	0412	
0	0	0	0	0	0	0	0	0413	
DI1	TIMER 1	DI1	DI1	DI1	DI1	DI1	NOT SEL	1001	
DI1	TIMER 1	NOT SEL	DI1	DI1	DI1	DI1	NOT SEL	1002	
FORWARD	FORWARD	FORWARD	FORWARD	FORWARD	FORWARD	FORWARD	FORWARD	1003	

	Parameter name	Par. index	HVAC default 1	Supply fan 2	Return fan 3	Cooling tower fan 4	Condenser 5	Booster pump 6
11 REFERENCE SELECT	KEYPAD REF SEL	1101	REF 1 (Hz/rpm)	REF 1 (Hz/rpm)	REF 1 (Hz/rpm)	REF 1 (Hz/rpm)	REF 1 (Hz/rpm)	REF 1 (Hz/rpm)
	EXT1/EXT2 SEL	1102	EXT1	EXT1	EXT1	EXT1	EXT1	EXT1
	REF1 SELECT	1103	AI1	AI1	AI1	AI1	AI1	AI1
	REF1 MIN	1104	0.0 Hz / 0 rpm	0.0 Hz / 0 rpm	0.0 Hz / 0 rpm	0.0 Hz / 0 rpm	0.0 Hz / 0 rpm	0.0 Hz / 0 rpm
	REF1 MAX	1105	50.0 Hz / 1500 rpm 60.0 Hz / 1800 rpm	50.0 Hz / 1500 rpm 60.0 Hz / 1800 rpm	50.0 Hz / 1500 rpm 60.0 Hz / 1800 rpm	50.0 Hz / 1500 rpm 60.0 Hz / 1800 rpm	50.0 Hz / 1500 rpm 60.0 Hz / 1800 rpm	50.0 Hz / 1500 rpm 60.0 Hz / 1800 rpm
	REF2 SELECT	1106	PID1 OUT	PID1 OUT	PID1 OUT	PID1 OUT	PID1 OUT	PID1 OUT
	REF2 MIN	1107	0.0%	0.0%	0.0%	0.0%	0.0%	0.0%
	REF2 MAX	1108	100.0%	100.0%	100.0%	100.0%	100.0%	100.0%
12 CONSTANT SPEEDS	CONST SPEED SEL	1201	DI3	DI3	DI3	DI3	DI3	DI3
	CONST SPEED 1	1202	5/6 Hz	5/6 Hz	5/6 Hz	5/6 Hz	5/6 Hz	5/6 Hz
	CONST SPEED 2	1203	10/12 Hz	10/12 Hz	10/12 Hz	10/12 Hz	10/12 Hz	10/12 Hz
	CONST SPEED 3	1204	15/18 Hz	15/18 Hz	15/18 Hz	15/18 Hz	15/18 Hz	15/18 Hz
	CONST SPEED 4	1205	20/24 Hz	20/24 Hz	20/24 Hz	20/24 Hz	20/24 Hz	20/24 Hz
	CONST SPEED 5	1206	25/30 Hz	25/30 Hz	25/30 Hz	25/30 Hz	25/30 Hz	25/30 Hz
	CONST SPEED 6	1207	40/48 Hz	40/48 Hz	40/48 Hz	40/48 Hz	40/48 Hz	40/48 Hz
	CONST SPEED 7	1208	50/60 Hz	50/60 Hz	50/60 Hz	50/60 Hz	50/60 Hz	50/60 Hz
	TIMED MODE SEL	1209	CS1/2/3/4	CS1/2/3/4	CS1/2/3/4	CS1/2/3/4	CS1/2/3/4	CS1/2/3/4

Pump alternation	Internal timer	Internal timer, c. speeds	Floating point	Dual setpoint PID	Dual setpoint PID, c. sp.	E-bypass	Hand control		
7	**8**	**9**	**10**	**11**	**12**	**13**	**14**	**Par. index**	**User**
REF 1 (Hz/rpm)	REF 1 (Hz/rpm)	REF 1 (Hz/rpm)	REF 1 (Hz/rpm)	REF 1 (Hz/rpm)	REF 1 (Hz/rpm)	REF 1 (Hz/rpm)	REF 1 (Hz/rpm)	1101	
EXT1	EXT1	EXT1	EXT1	EXT1	DI2	EXT1	EXT1	1102	
AI1	AI1	KEYPAD	DI5U, 6D	AI1	AI1	AI1	AI1	1103	
0.0 Hz / 0 rpm	0.0 Hz / 0 rpm	0.0 Hz / 0 rpm	0.0 Hz / 0 rpm	0.0 Hz / 0 rpm	0.0 Hz / 0 rpm	0.0 Hz / 0 rpm	0.0 Hz / 0 rpm	1104	
52.0 Hz / 1560 rpm 62.0 H z/ 1860 rpm	50.0 Hz / 1500 rpm 60.0 Hz / 1800 rpm	50.0 H / 1500 rpm 60.0 Hz / 1800 rpm	50.0 Hz / 1500 rpm 60.0 Hz / 1800 rpm	50.0 Hz / 1500 rpm 60.0 Hz / 1800 rpm	50.0 Hz / 1500 rpm 60.0 Hz / 1800 rpm	50.0 Hz / 1500 rpm 60.0 Hz / 1800 rpm	50.0 Hz / 1500 rpm 60.0 Hz / 1800 rpm	1105	
PID1 OUT	PID1 OUT	AI2	AI2	PID1 OUT	PID1 OUT	PID1 OUT	AI2	1106	
0.0%	0.0%	0.0%	0.0%	0.0%	0.0%	0.0%	0.0%	1107	
100.0%	100.0%	100.0%	100.0%	100.0%	100.0%	100.0%	100.0%	1108	
NOT SEL	NOT SEL	TIMER 1	DI3	NOT SEL	DI4, 5	NOT SEL	NOT SEL	1201	
5/6 Hz	5/6 Hz	5/6 Hz	5/6 Hz	5/6 Hz	5/6 Hz	5/6 Hz	5/6 Hz	1202	
10/12 Hz	10/12 Hz	10/12 Hz	10/12 Hz	10/12 Hz	10/12 Hz	10/12 Hz	10/12 Hz	1203	
15/18 Hz	15/18 Hz	15/18 Hz	15/18 Hz	15/18 Hz	15/18 Hz	15/18 Hz	15/18 Hz	1204	
20/24 Hz	20/24 Hz	20/24 Hz	20/24 Hz	20/24 Hz	20/24 Hz	20/24 Hz	20/24 Hz	1205	
25/30 Hz	25/30 Hz	25/30 Hz	25/30 Hz	25/30 Hz	25/30 Hz	25/30 Hz	25/30 Hz	1206	
40/48 Hz	40/48 Hz	40/48 Hz	40/48 Hz	40/48 Hz	40/48 Hz	40/48 Hz	40/48 Hz	1207	
50/60 Hz	50/60 Hz	50/60 Hz	50/60 Hz	50/60 Hz	50/60 Hz	50/60 Hz	50/60 Hz	1208	
CS1/2/3/4	CS1/2/3/4	CS1/2/3/4	CS1/2/3/4	CS1/2/3/4	CS1/2/3/4	CS1/2/3/4	CS1/2/3/4	1209	

	Parameter name	Par. index	HVAC default 1	Supply fan 2	Return fan 3	Cooling tower fan 4	Condenser 5	Booster pump 6
13 ANALOGUE INPUTS	MINIMUN AI1	1301	20.0%	20.0%	20.0%	20.0%	20.0%	20.0%
	MAXIMUM AI1	1302	100.0%	100.0%	100.0%	100.0%	100.0%	100.0%
	FILTER AI1	1303	0.1 s	0.1 s	0.1 s	0.1 s	0.1 s	0.1 s
	MINIMUM AI2	1304	20.0%	20.0%	20.0%	20.0%	20.0%	20.0%
	MAXIMUM AI2	1305	100.0%	100.0%	100.0%	100.0%	100.0%	100.0%
	FILTER AI2	1306	0.1 s	0.1 s	0.1 s	0.1 s	0.1 s	0.1 s
14 RELAY OUTPUTS	RELAY OUTPUT 1	1401	READY	STARTED	STARTED	STARTED	STARTED	STARTED
	RELAY OUTPUT 2	1402	RUN	RUN	RUN	RUN	RUN	RUN
	RELAY OUTPUT 3	1403	FAULT (-1)	FAULT (-1)	FAULT (-1)	FAULT (-1)	FAULT (-1)	FAULT (-1)
	RO 1 ON DELAY	1404	0.0 s	0.0 s	0.0 s	0.0 s	0.0 s	0.0 s
	RO 1 OFF DELAY	1405	0.0 s	0.0 s	0.0 s	0.0 s	0.0 s	0.0 s
	RO 2 ON DELAY	1406	0.0 s	0.0 s	0.0 s	0.0 s	0.0 s	0.0 s
	RO 2 OFF DELAY	1407	0.0 s	0.0 s	0.0 s	0.0 s	0.0 s	0.0 s
	RO 3 ON DELAY	1408	0.0 s	0.0 s	0.0 s	0.0 s	0.0 s	0.0 s
	RO 3 OFF DELAY	1409	0.0 s	0.0 s	0.0 s	0.0 s	0.0 s	0.0 s
	RELAY OUTPUT 4	1410	NOT SEL	NOT SEL	NOT SEL	NOT SEL	NOT SEL	NOT SEL
	RELAY OUTPUT 5	1411	NOT SEL	NOT SEL	NOT SEL	NOT SEL	NOT SEL	NOT SEL
	RELAY OUTPUT 6	1412	NOT SEL	NOT SEL	NOT SEL	NOT SEL	NOT SEL	NOT SEL
	RO 4 ON DELAY	1413	0.0 s	0.0 s	0.0 s	0.0 s	0.0 s	0.0 s
	RO 4 OFF DELAY	1414	0.0 s	0.0 s	0.0 s	0.0 s	0.0 s	0.0 s
	RO 5 ON DELAY	1415	0.0 s	0.0 s	0.0 s	0.0 s	0.0 s	0.0 s
	RO 5 OFF DELAY	1416	0.0 s	0.0 s	0.0 s	0.0 s	0.0 s	0.0 s
	RO 6 ON DELAY	1417	0.0 s	0.0 s	0.0 s	0.0 s	0.0 s	0.0 s
	RO 6 OFF DELAY	1418	0.0 s	0.0 s	0.0 s	0.0 s	0.0 s	0.0 s

Pump alternation	Internal timer	Internal timer, c. speeds	Floating point	Dual setpoint PID	Dual setpoint PID, c. sp.	E-bypass	Hand control		
7	8	9	10	11	12	13	14	Par. index	User
20.0%	20.0%	0.0%	20.0%	20.0%	20.0%	20.0%	0.0%	1301	
100.0%	100.0%	100.0%	100.0%	100.0%	100.0%	100.0%	100.0%	1302	
0.1 s	0.1 s	0.1 s	0.1 s	0.1 s	0.1 s	0.1 s	0.1 s	1303	
20.0%	20.0%	0.0%	20.0%	20.0%	20.0%	20.0%	0.0%	1304	
100.0%	100.0%	100.0%	100.0%	100.0%	100.0%	100.0%	100.0%	1305	
0.1 s	0.1 s	0.1 s	0.1 s	0.1 s	0.1 s	0.1 s	0.1 s	1306	
PFA	STARTED	STARTED	STARTED	STARTED	STARTED	STARTED	READY	1401	
RUN	RUN	RUN	RUN	RUN	RUN	RUN	RUN	1402	
FAULT (-1)	FAULT (-1)	FAULT (-1)	FAULT (-1)	FAULT (-1)	FAULT (-1)	FAULT (-1)	FAULT (-1)	1403	
0.0 s	0.0 s	0.0 s	0.0 s	0.0 s	0.0 s	0.0 s	0.0 s	1404	
0.0 s	0.0 s	0.0 s	0.0 s	0.0 s	0.0 s	0.0 s	0.0 s	1405	
0.0 s	0.0 s	0.0 s	0.0 s	0.0 s	0.0 s	0.0 s	0.0 s	1406	
0.0 s	0.0 s	0.0 s	0.0 s	0.0 s	0.0 s	0.0 s	0.0 s	1407	
0.0 s	0.0 s	0.0 s	0.0 s	0.0 s	0.0 s	0.0 s	0.0 s	1408	
0.0 s	0.0 s	0.0 s	0.0 s	0.0 s	0.0 s	0.0 s	0.0 s	1409	
NOT SEL	NOT SEL	NOT SEL	NOT SEL	NOT SEL	NOT SEL	NOT SEL	NOT SEL	1410	
NOT SEL	NOT SEL	NOT SEL	NOT SEL	NOT SEL	NOT SEL	NOT SEL	NOT SEL	1411	
NOT SEL	NOT SEL	NOT SEL	NOT SEL	NOT SEL	NOT SEL	NOT SEL	NOT SEL	1412	
0.0 s	0.0 s	0.0 s	0.0 s	0.0 s	0.0 s	0.0 s	0.0 s	1413	
0.0 s	0.0 s	0.0 s	0.0 s	0.0 s	0.0 s	0.0 s	0.0 s	1414	
0.0 s	0.0 s	0.0 s	0.0 s	0.0 s	0.0 s	0.0 s	0.0 s	1415	
0.0 s	0.0 s	0.0 s	0.0 s	0.0 s	0.0 s	0.0 s	0.0 s	1416	
0.0 s	0.0 s	0.0 s	0.0 s	0.0 s	0.0 s	0.0 s	0.0 s	1417	
0.0 s	0.0 s	0.0 s	0.0 s	0.0 s	0.0 s	0.0 s	0.0 s	1418	

	Parameter name	Par. index	HVAC default 1	Supply fan 2	Return fan 3	Cooling tower fan 4	Condenser 5	Booster pump 6
15 ANALOGUE OUTPUTS	AO1 CONTENT SEL	1501	OUTPUT FREQ	OUTPUT FREQ	OUTPUT FREQ	OUTPUT FREQ	OUTPUT FREQ	OUTPUT FREQ
	AO1 CONTENT MIN	1502	0.0 Hz	0.0 Hz	0.0 Hz	0.0 Hz	0.0 Hz	0.0 Hz
	AO1 CONTENT MAX	1503	50.0/ 60.0 Hz	50.0/ 60.0 Hz	50.0/ 60.0 Hz	50.0/ 60.0 Hz	50.0/ 60.0 Hz	50.0/ 60.0 Hz
	MINIMUM AO1	1504	4.0 mA	4.0 mA	4.0 mA	4.0 mA	4.0 mA	4.0 mA
	MAXIMUM AO1	1505	20.0 mA	20.0 mA	20.0 mA	20.0 mA	20.0 mA	20.0 mA
	FILTER AO1	1506	0.1 s	0.1 s	0.1 s	0.1 s	0.1 s	0.1 s
	AO2 CONTENT SEL	1507	CURRENT	CURRENT	CURRENT	CURRENT	CURRENT	CURRENT
	AO2 CONTENT MIN	1508	0.0 A	0.0 A	0.0 A	0.0 A	0.0 A	0.0 A
	AO2 CONTENT MAX	1509	Defined by par. 0104	Defined by par. 0104	Defined by par. 0104	Defined by par. 0104	Defined by par. 0104	Defined by par. 0104
	MINIMUM AO2	1510	4.0 mA	4.0 mA	4.0 mA	4.0 mA	4.0 mA	4.0 mA
	MAXIMUM AO2	1511	20.0 mA	20.0 mA	20.0 mA	20.0 mA	20.0 mA	20.0 mA
	FILTER AO2	1512	0.1 s	0.1 s	0.1 s	0.1 s	0.1 s	0.1 s
16 SYSTEM CONTROLS	RUN ENABLE	1601	NOT SEL	DI2	DI2	DI2	DI2	DI2
	PARAMETER LOCK	1602	OPEN	OPEN	OPEN	OPEN	OPEN	OPEN
	PASS CODE	1603	0	0	0	0	0	0
	FAULT RESET SEL	1604	KEYPAD	KEYPAD	KEYPAD	KEYPAD	KEYPAD	KEYPAD
	USER PAR SET CHG	1605	NOT SEL	NOT SEL	NOT SEL	NOT SEL	NOT SEL	NOT SEL
	LOCAL LOCK	1606	NOT SEL	NOT SEL	NOT SEL	NOT SEL	NOT SEL	NOT SEL
	PARAM SAVE	1607	DONE	DONE	DONE	DONE	DONE	DONE
	START ENABLE 1	1608	DI4	DI4	DI4	DI4	DI4	DI4
	START ENABLE 2	1609	NOT SEL	DI5	DI5	DI5	DI5	DI5
	DISPLAY ALARMS	1610	NO	NO	NO	NO	NO	NO
	PARAMETER VIEW	1611	DEFAULT	DEFAULT	DEFAULT	DEFAULT	DEFAULT	DEFAULT

Pump alternation	Internal timer	Internal timer, c. speeds	Floating point	Dual setpoint PID	Dual setpoint PID, c. sp.	E-bypass	Hand control		
7	**8**	**9**	**10**	**11**	**12**	**13**	**14**	**Par. index**	**User**
OUTPUT FREQ	OUTPUT FREQ	OUTPUT FREQ	OUTPUT FREQ	OUTPUT FREQ	OUTPUT FREQ	OUTPUT FREQ	OUTPUT FREQ	1501	
0.0 Hz	0.0 Hz	0.0 Hz	0.0 Hz	0.0 Hz	0.0 Hz	0.0 Hz	0.0 Hz	1502	
52.0/ 62.0 Hz	50.0/ 60.0 Hz	50.0/ 60.0 Hz	50.0/ 60.0 Hz	50.0/ 60.0 Hz	50.0/ 60.0 Hz	50.0/ 60.0 Hz	50.0/ 60.0 Hz	1503	
4.0 mA	4.0 mA	4.0 mA	4.0 mA	4.0 mA	4.0 mA	4.0 mA	0.0 mA	1504	
20.0 mA	20.0 mA	20.0 mA	20.0 mA	20.0 mA	20.0 mA	20.0 mA	20.0 mA	1505	
0.1 s	0.1 s	0.1 s	0.1 s	0.1 s	0.1 s	0.1 s	0.1 s	1506	
PID 1 FBK	CURRENT	CURRENT	CURRENT	CURRENT	CURRENT	CURRENT	CURRENT	1507	
0.0%	0.0 A	0.0 A	0.0 A	0.0 A	0.0 A	0.0 A	0.0 A	1508	
100.0%	Defined by par. 0104	Defined by par. 0104	Defined by par. 0104	Defined by par. 0104	Defined by par. 0104	Defined by par. 0104	Defined by par. 0104	1509	
4.0 mA	4.0 mA	4.0 mA	4.0 mA	4.0 mA	4.0 mA	4.0 mA	0.0 mA	1510	
20.0 mA	20.0 mA	20.0 mA	20.0 mA	20.0 mA	20.0 mA	20.0 mA	20.0 mA	1511	
0.1 s	0.1 s	0.1 s	0.1 s	0.1 s	0.1 s	0.1 s	0.1 s	1512	
DI2	DI2	DI2	DI2	DI2	NOT SEL	D2	NOT SEL	1601	
OPEN	OPEN	OPEN	OPEN	OPEN	OPEN	OPEN	OPEN	1602	
0	0	0	0	0	0	0	0	1603	
KEYPAD	KEYPAD	KEYPAD	KEYPAD	KEYPAD	KEYPAD	KEYPAD	KEYPAD	1604	
NOT SEL	NOT SEL	NOT SEL	NOT SEL	NOT SEL	NOT SEL	NOT SEL	NOT SEL	1605	
NOT SEL	NOT SEL	NOT SEL	NOT SEL	NOT SEL	NOT SEL	NOT SEL	NOT SEL	1606	
DONE	DONE	DONE	DONE	DONE	DONE	DONE	DONE	1607	
NOT SEL	DI4	DI4	DI4	DI4	NOT SEL	NOT SEL	NOT SEL	1608	
NOT SEL	DI5	DI5	NOT SEL	DI5	NOT SEL	NOT SEL	NOT SEL	1609	
NO	NO	NO	NO	NO	NO	NO	NO	1610	
DEFAULT	DEFAULT	DEFAULT	DEFAULT	DEFAULT	DEFAULT	DEFAULT	DEFAULT	1611	

	Parameter name	Par. index	HVAC default 1	Supply fan 2	Return fan 3	Cooling tower fan 4	Condenser 5	Booster pump 6
17 OVERRIDE	OVERRIDE SEL	1701	NOT SEL	NOT SEL	NOT SEL	NOT SEL	NOT SEL	NOT SEL
	OVERRIDE FREQ	1702	0.0 Hz	0.0 Hz	0.0 Hz	0.0 Hz	0.0 Hz	0.0 Hz
	OVERRIDE SPEED	1703	0 rpm	0 rpm	0 rpm	0 rpm	0 rpm	0 rpm
	OVERR PASS CODE	1704	0	0	0	0	0	0
	OVERRIDE	1705	OFF	OFF	OFF	OFF	OFF	OFF
	OVERRIDE SPEED	1706	FORWARD	FORWARD	FORWARD	FORWARD	FORWARD	FORWARD
	OVERRIDE REF	1707	CONSTANT	CONSTANT	CONSTANT	CONSTANT	CONSTANT	CONSTANT
20 LIMITS	MINIMUM SPEED	2001	0 rpm	0 rpm	0 rpm	0 rpm	0 rpm	0 rpm
	MAXIMUM SPEED	2002	1500/ 1800 rpm	1500/ 1800 rpm	1500/ 1800 rpm	1500/ 1800 rpm	1500/ 1800 rpm	1500/ 1800 rpm
	MAX CURRENT	2003	$1.1 \cdot I_N$	$1.1 \cdot I_N$	$1.1 \cdot I_N$	$1.1 \cdot I_N$	$1.1 \cdot I_N$	$1.1 \cdot I_N$
	UNDERVOLT CTRL	2006	ENABLE (TIME)	ENABLE (TIME)	ENABLE (TIME)	ENABLE (TIME)	ENABLE (TIME)	ENABLE (TIME)
	MINIMUM FREQ	2007	0.0 Hz	0.0 Hz	0.0 Hz	0.0 Hz	0.0 Hz	0.0 Hz
	MAXIMUM FREQ	2008	50.0/ 60.0 Hz	50.0/ 60.0 Hz	50.0/ 60.0 Hz	50.0/ 60.0 Hz	50.0/ 60.0 Hz	50.0/ 60.0 Hz
	MIN TORQUE SEL	2013	MIN TORQUE 1	MIN TORQUE 1	MIN TORQUE 1	MIN TORQUE 1	MIN TORQUE 1	MIN TORQUE 1
	MAX TORQUE SEL	2014	MAX TORQUE 1	MAX TORQUE 1	MAX TORQUE 1	MAX TORQUE 1	MAX TORQUE 1	MAX TORQUE 1
	MIN TORQUE 1	2015	-300.0%	-300.0%	-300.0%	-300.0%	-300.0%	-300.0%
	MIN TORQUE 2	2016	-300.0%	-300.0%	-300.0%	-300.0%	-300.0%	-300.0%
	MAX TORQUE 1	2017	300.0%	300.0%	300.0%	300.0%	300.0%	300.0%
	MAX TORQUE 2	2018	300.0%	300.0%	300.0%	300.0%	300.0%	300.0%
21 START/ STOP	START FUNCTION	2101	RAMP	RAMP	RAMP	RAMP	RAMP	RAMP
	STOP FUNCTION	2102	COAST	COAST	COAST	COAST	COAST	COAST
	DC MAGN TIME	2103	0.30 s	0.30 s	0.30 s	0.30 s	0.30 s	0.30 s
	DC HOLD CTL	2104	NOT SEL	NOT SEL	NOT SEL	NOT SEL	NOT SEL	NOT SEL
	DC CURR REF	2106	30%	30%	30%	30%	30%	30%
	DC BRAKE TIME	2107	0.0 s	0.0 s	0.0 s	0.0 s	0.0 s	0.0 s
	START INHIBIT	2108	OFF	OFF	OFF	OFF	OFF	OFF
	EMERG STOP SEL	2109	NOT SEL	NOT SEL	NOT SEL	NOT SEL	NOT SEL	NOT SEL
	TORQ BOOST CURR	2110	100%	100%	100%	100%	100%	100%
	START DELAY	2113	0.00 s	0.00 s	0.00 s	0.00 s	0.00 s	0.00 s

Pump alternation	Internal timer	Internal timer, c. speeds	Floating point	Dual setpoint PID	Dual setpoint PID, c. sp.	E-bypass	Hand control		
7	**8**	**9**	**10**	**11**	**12**	**13**	**14**	**Par. index**	**User**
NOT SEL	NOT SEL	NOT SEL	NOT SEL	NOT SEL	NOT SEL	NOT SEL	NOT SEL	1701	
0.0 Hz	0.0 Hz	0.0 Hz	0.0 Hz	0.0 Hz	0.0 Hz	0.0 Hz	0.0 Hz	1702	
0 rpm	0 rpm	0 rpm	0 rpm	0 rpm	0 rpm	0 rpm	0 rpm	1703	
0	0	0	0	0	0	0	0	1704	
OFF	OFF	OFF	OFF	OFF	OFF	OFF	OFF	1705	
FORWARD	FORWARD	FORWARD	FORWARD	FORWARD	FORWARD	FORWARD	FORWARD	1706	
CONSTANT	CONSTANT	CONSTANT	CONSTANT	CONSTANT	CONSTANT	CONSTANT	CONSTANT	1707	
0 rpm	0 rpm	0 rpm	0 rpm	0 rpm	0 rpm	0 rpm	0 rpm	2001	
1500/ 1800 rpm	1500/ 1800 rpm	1500/ 1800 rpm	1500/ 1800 rpm	1500/ 1800 rpm	1500/ 1800 rpm	1500/ 1800 rpm	1500/ 1800 rpm	2002	
$1.1 \cdot I_N$	$1.1 \cdot I_N$	$1.1 \cdot I_N$	$1.1 \cdot I_N$	$1.1 \cdot I_N$	$1.1 \cdot I_N$	$1.1 \cdot I_N$	$1.1 \cdot I_N$	2003	
ENABLE (TIME)	ENABLE (TIME)	ENABLE (TIME)	ENABLE (TIME)	ENABLE (TIME)	ENABLE (TIME)	ENABLE (TIME)	ENABLE (TIME)	2006	
0.0 Hz	0.0 Hz	0.0 Hz	0.0 Hz	0.0 Hz	0.0 Hz	0.0 Hz	0.0 Hz	2007	
52.0/ 62.0 Hz	50.0/ 60.0 Hz	50.0/ 60.0 Hz	50.0/ 60.0 Hz	50.0/ 60.0 Hz	50.0/ 60.0 Hz	50.0/ 60.0 Hz	50.0/ 60.0 Hz	2008	
MIN TORQUE 1	MIN TORQUE 1	MIN TORQUE 1	MIN TORQUE 1	MIN TORQUE 1	MIN TORQUE 1	MIN TORQUE 1	MIN TORQUE 1	2013	
MAX TORQUE 1	MAX TORQUE 1	MAX TORQUE 1	MAX TORQUE 1	MAX TORQUE 1	MAX TORQUE 1	MAX TORQUE 1	MAX TORQUE 1	2014	
-300.0%	-300.0%	-300.0%	-300.0%	-300.0%	-300.0%	-300.0%	-300.0%	2015	
-300.0%	-300.0%	-300.0%	-300.0%	-300.0%	-300.0%	-300.0%	-300.0%	2016	
300.0%	300.0%	300.0%	300.0%	300.0%	300.0%	300.0%	300.0%	2017	
300.0%	300.0%	300.0%	300.0%	300.0%	300.0%	300.0%	300.0%	2018	
RAMP	RAMP	RAMP	RAMP	RAMP	RAMP	RAMP	RAMP	2101	
COAST	COAST	COAST	COAST	COAST	COAST	COAST	COAST	2102	
0.30 s	0.30 s	0.30 s	0.30 s	0.30 s	0.30 s	0.30 s	0.30 s	2103	
NOT SEL	NOT SEL	NOT SEL	NOT SEL	NOT SEL	NOT SEL	NOT SEL	NOT SEL	2104	
30%	30%	30%	30%	30%	30%	30%	30%	2106	
0.0 s	0.0 s	0.0 s	0.0 s	0.0 s	0.0 s	0.0 s	0.0 s	2107	
OFF	OFF	OFF	OFF	OFF	ON	ON	ON	2108	
NOT SEL	NOT SEL	NOT SEL	NOT SEL	NOT SEL	NOT SEL	NOT SEL	NOT SEL	2109	
100%	100%	100%	100%	100%	100%	100%	100%	2110	
0.00 s	0.00 s	0.00 s	0.00 s	0.00 s	0.00 s	0.00 s	0.00 s	2113	

	Parameter name	Par. index	HVAC default 1	Supply fan 2	Return fan 3	Cooling tower fan 4	Condenser 5	Booster pump 6
22 ACCEL/ DECEL	ACC/DEC 1/2 SEL	2201	NOT SEL	NOT SEL	NOT SEL	NOT SEL	NOT SEL	NOT SEL
	ACCELER TIME 1	2202	30.0 s	15.0 s	15.0 s	30.0 s	10.0 s	5.0 s
	DECELER TIME 1	2203	30.0 s	15.0 s	15.0 s	30.0 s	10.0 s	5.0 s
	RAMP SHAPE 1	2204	0.0 s	0.0 s	0.0 s	0.0 s	0.0 s	1.0 s
	ACCELER TIME 2	2205	60.0 s	60.0 s	60.0 s	60.0 s	60.0 s	60.0 s
	DECELER TIME 2	2206	60.0 s	60.0 s	60.0 s	60.0 s	60.0 s	60.0 s
	RAMP SHAPE 2	2207	0.0 s	0.0 s	0.0 s	0.0 s	0.0 s	0.0 s
	EMERG DEC TIME	2208	1.0 s	1.0 s	1.0 s	1.0 s	1.0 s	1.0 s
	RAMP INPUT 0	2209	NOT SEL	NOT SEL	NOT SEL	NOT SEL	NOT SEL	NOT SEL
23 SPEED CONTROL	PROP GAIN	2301	10.0	10.0	10.0	10.0	10.0	10.0
	INTEGRATION TIME	2302	2.50 s	2.50 s	2.50 s	2.50 s	2.50 s	2.50 s
	DERIVATION TIME	2303	0 ms	0 ms	0 ms	0 ms	0 ms	0 ms
	ACC COMPEN-SATION	2304	0.00 s	0.00 s	0.00 s	0.00 s	0.00 s	0.00 s
	AUTOTUNE RUN	2305	OFF	OFF	OFF	OFF	OFF	OFF
25 CRITICAL SPEEDS	CRIT SPEED SEL	2501	OFF	OFF	OFF	OFF	OFF	OFF
	CRIT SPEED 1 LO	2502	0 Hz / 0 rpm	0 Hz / 0 rpm	0 Hz / 0 rpm	0 Hz / 0 rpm	0 Hz / 0 rpm	0 Hz / 0 rpm
	CRIT SPEED 1 HI	2503	0 Hz / 0 rpm	0 Hz / 0 rpm	0 Hz / 0 rpm	0 Hz / 0 rpm	0 Hz / 0 rpm	0 Hz / 0 rpm
	CRIT SPEED 2 LO	2504	0 Hz / 0 rpm	0 Hz / 0 rpm	0 Hz / 0 rpm	0 Hz / 0 rpm	0 Hz / 0 rpm	0 Hz / 0 rpm
	CRIT SPEED 2 HI	2505	0 Hz / 0 rpm	0 Hz / 0 rpm	0 Hz / 0 rpm	0 Hz / 0 rpm	0 Hz / 0 rpm	0 Hz / 0 rpm
	CRIT SPEED 3 LO	2506	0 Hz / 0 rpm	0 Hz / 0 rpm	0 Hz / 0 rpm	0 Hz / 0 rpm	0 Hz / 0 rpm	0 Hz / 0 rpm
	CRIT SPEED 3 HI	2507	0 Hz / 0 rpm	0 Hz / 0 rpm	0 Hz / 0 rpm	0 Hz / 0 rpm	0 Hz / 0 rpm	0 Hz / 0 rpm
26 MOTOR CONTROLS	FLUX OPT ENABLE	2601	ON	ON	ON	ON	ON	ON
	FLUX BRAKING	2602	OFF	OFF	OFF	OFF	OFF	OFF
	IR COMP VOLT	2603	0 V	0 V	0 V	0 V	0 V	0 V
	IR COMP FREQ	2604	50%	50%	50%	50%	50%	50%
	U/F RATIO	2605	SQUARED	SQUARED	SQUARED	SQUARED	SQUARED	SQUARED
	SWITCHING FREQ	2606	4 kHz	4 kHz	4 kHz	4 kHz	4 kHz	4 kHz
	SWITCH FREQ CTRL	2607	ON	ON	ON	ON	ON	ON
	SLIP COMP RATIO	2608	0%	0%	0%	0%	0%	0%
	NOISE SMOOTHING	2609	DISABLE	DISABLE	DISABLE	DISABLE	DISABLE	DISABLE
	DC STABILIZER	2619	DISABLE	DISABLE	DISABLE	DISABLE	DISABLE	DISABLE

Pump alternation	Internal timer	Internal timer, c. speeds	Floating point	Dual setpoint PID	Dual setpoint PID, c. sp.	E-bypass	Hand control		
7	8	9	10	11	12	13	14	Par. index	User
NOT SEL	NOT SEL	NOT SEL	NOT SEL	NOT SEL	NOT SEL	NOT SEL	NOT SEL	2201	
5.0 s	30.0 s	30.0 s	30.0 s	30.0 s	10.0 s	30.0 s	30.0 s	2202	
5.0 s	30.0 s	30.0 s	30.0 s	30.0 s	10.0 s	30.0 s	30.0 s	2203	
0.0 s	0.0 s	0.0 s	0.0 s	0.0 s	0.0 s	0.0 s	0.0 s	2204	
60.0 s	60.0 s	60.0 s	60.0 s	60.0 s	60.0 s	60.0 s	60.0 s	2205	
60.0 s	60.0 s	60.0 s	60.0 s	60.0 s	60.0 s	60.0 s	60.0 s	2206	
0.0 s	0.0 s	0.0 s	0.0 s	0.0 s	0.0 s	0.0 s	0.0 s	2207	
1.0 s	1.0 s	1.0 s	1.0 s	1.0 s	1.0 s	1.0 s	1.0 s	2208	
NOT SEL	NOT SEL	NOT SEL	NOT SEL	NOT SEL	NOT SEL	NOT SEL	NOT SEL	2209	
10.0	10.0	10.0	10.0	10.0	10.0	10.0	10.0	2301	
2.50 s	2.50 s	2.50 s	2.50 s	2.50 s	2.50 s	2.50 s	2.50 s	2302	
0 ms	0 ms	0 ms	0 ms	0 ms	0 ms	0 ms	0 ms	2303	
0.00 s	0.00 s	0.00 s	0.00 s	0.00 s	0.00 s	0.00 s	0.00 s	2304	
OFF	OFF	OFF	OFF	OFF	OFF	OFF	OFF	2305	
OFF	OFF	OFF	OFF	OFF	OFF	OFF	OFF	2501	
0 Hz / 0 rpm	0 Hz / 0 rpm	0 Hz / 0 rpm	0 Hz / 0 rpm	0 Hz / 0 rpm	0 Hz / 0 rpm	0 Hz / 0 rpm	0 Hz / 0 rpm	2502	
0 Hz / 0 rpm	0 Hz / 0 rpm	0 Hz / 0 rpm	0 Hz / 0 rpm	0 Hz / 0 rpm	0 Hz / 0 rpm	0 Hz / 0 rpm	0 Hz / 0 rpm	2503	
0 Hz / 0 rpm	0 Hz / 0 rpm	0 Hz / 0 rpm	0 Hz / 0 rpm	0 Hz / 0 rpm	0 Hz / 0 rpm	0 Hz / 0 rpm	0 Hz / 0 rpm	2504	
0 Hz / 0 rpm	0 Hz / 0 rpm	0 Hz / 0 rpm	0 Hz / 0 rpm	0 Hz / 0 rpm	0 Hz / 0 rpm	0 Hz / 0 rpm	0 Hz / 0 rpm	2505	
0 Hz / 0 rpm	0 Hz / 0 rpm	0 Hz / 0 rpm	0 Hz / 0 rpm	0 Hz / 0 rpm	0 Hz / 0 rpm	0 Hz / 0 rpm	0 Hz / 0 rpm	2506	
0 Hz / 0 rpm	0 Hz / 0 rpm	0 Hz / 0 rpm	0 Hz / 0 rpm	0 Hz / 0 rpm	0 Hz / 0 rpm	0 Hz / 0 rpm	0 Hz / 0 rpm	2507	
ON	ON	ON	ON	ON	ON	ON	ON	2601	
OFF	OFF	OFF	OFF	OFF	OFF	OFF	OFF	2602	
0 V	0 V	0 V	0 V	0 V	0 V	0 V	0 V	2603	
50%	50%	50%	50%	50%	50%	50%	50%	2604	
SQUARED	SQUARED	SQUARED	SQUARED	SQUARED	SQUARED	SQUARED	SQUARED	2605	
4 kHz	4 kHz	4 kHz	4 kHz	4 kHz	4 kHz	4 kHz	4 kHz	2606	
ON	ON	ON	ON	ON	ON	ON	ON	2607	
0%	0%	0%	0%	0%	0%	0%	0%	2608	
DISABLE	DISABLE	DISABLE	DISABLE	DISABLE	DISABLE	DISABLE	DISABLE	2609	
DISABLE	DISABLE	DISABLE	DISABLE	DISABLE	DISABLE	DISABLE	DISABLE	2619	

	Parameter name	Par. index	HVAC default 1	Supply fan 2	Return fan 3	Cooling tower fan 4	Condenser 5	Booster pump 6
29 MAINTE-NANCE TRIG	COOLING FAN TRIG	2901	0.0 kh	0.0 kh	0.0 kh	0.0 kh	0.0 kh	0.0 kh
	COOLING FAN ACT	2902	0.0 kh	0.0 kh	0.0 kh	0.0 kh	0.0 kh	0.0 kh
	REVOLUTION TRIG	2903	0 Mrev	0 Mrev	0 Mrev	0 Mrev	0 Mrev	0 Mrev
	REVOLUTION ACT	2904	0 Mrev	0 Mrev	0 Mrev	0 Mrev	0 Mrev	0 Mrev
	RUN TIME TRIG	2905	0.0 kh	0.0 kh	0.0 kh	0.0 kh	0.0 kh	0.0 kh
	RUN TIME ACT	2906	0.0 kh	0.0 kh	0.0 kh	0.0 kh	0.0 kh	0.0 kh
	USER MWH TRIG	2907	0.0 MWh	0.0 MWh	0.0 MWh	0.0 MWh	0.0 MWh	0.0 MWh
	USER MWH ACT	2908	0.0 MWh	0.0 MWh	0.0 MWh	0.0 MWh	0.0 MWh	0.0 MWh
30 FAULT FUNCTIONS	AI<MIN FUNCTION	3001	NOT SEL	NOT SEL	NOT SEL	NOT SEL	NOT SEL	NOT SEL
	PANEL COMM ERR	3002	FAULT	FAULT	FAULT	FAULT	FAULT	FAULT
	EXTERNAL FAULT 1	3003	NOT SEL	NOT SEL	NOT SEL	NOT SEL	NOT SEL	NOT SEL
	EXTERNAL FAULT 2	3004	NOT SEL	NOT SEL	NOT SEL	NOT SEL	NOT SEL	NOT SEL
	MOT THERM PROT	3005	FAULT	FAULT	FAULT	FAULT	FAULT	FAULT
	MOT THERM TIME	3006	1050 s	1050 s	1050 s	1050 s	1050 s	1050 s
	MOT LOAD CURVE	3007	100%	100%	100%	100%	100%	100%
	ZERO SPEED LOAD	3008	70%	70%	70%	70%	70%	70%
	BREAK POINT FREQ	3009	35 Hz	35 Hz	35 Hz	35 Hz	35 Hz	35 Hz
	STALL FUNCTION	3010	NOT SEL	NOT SEL	NOT SEL	NOT SEL	NOT SEL	NOT SEL
	STALL FREQUENCY	3011	20.0 Hz	20.0 Hz	20.0 Hz	20.0 Hz	20.0 Hz	20.0 Hz
	STALL TIME	3012	20 s	20 s	20 s	20 s	20 s	20 s
	EARTH FAULT	3017	ENABLE	ENABLE	ENABLE	ENABLE	ENABLE	ENABLE
	COMM FAULT FUNC	3018	NOT SEL	NOT SEL	NOT SEL	NOT SEL	NOT SEL	NOT SEL
	COMM FAULT TIME	3019	10.0 s	10.0 s	10.0 s	10.0 s	10.0 s	10.0 s
	AI1 FAULT LIMIT	3021	0.0%	0.0%	0.0%	0.0%	0.0%	0.0%
	AI2 FAULT LIMIT	3022	0.0%	0.0%	0.0%	0.0%	0.0%	0.0%
	WIRING FAULT	3023	ENABLE	ENABLE	ENABLE	ENABLE	ENABLE	ENABLE
	CB TEMP FAULT	3024	1	1	1	1	1	1

Pump alternation	Internal timer	Internal timer, c. speeds	Floating point	Dual setpoint PID	Dual setpoint PID, c. sp.	E-bypass	Hand control		
7	8	9	10	11	12	13	14	Par. index	User
0.0 kh	0.0 kh	0.0 kh	0.0 kh	0.0 kh	0.0 kh	0.0 kh	0.0 kh	2901	
0.0 kh	0.0 kh	0.0 kh	0.0 kh	0.0 kh	0.0 kh	0.0 kh	0.0 kh	2902	
0 Mrev	0 Mrev	0 Mrev	0 Mrev	0 Mrev	0 Mrev	0 Mrev	0 Mrev	2903	
0 Mrev	0 Mrev	0 Mrev	0 Mrev	0 Mrev	0 Mrev	0 Mrev	0 Mrev	2904	
0.0 kh	0.0 kh	0.0 kh	0.0 kh	0.0 kh	0.0 kh	0.0 kh	0.0 kh	2905	
0.0 kh	0.0 kh	0.0 kh	0.0 kh	0.0 kh	0.0 kh	0.0 kh	0.0 kh	2906	
0.0 MWh	0.0 MWh	0.0 MWh	0.0 MWh	0.0 MWh	0.0 MWh	0.0 MWh	0.0 MWh	2907	
0.0 MWh	0.0 MWh	0.0 MWh	0.0 MWh	0.0 MWh	0.0 MWh	0.0 MWh	0.0 MWh	2908	
NOT SEL	NOT SEL	NOT SEL	NOT SEL	NOT SEL	NOT SEL	NOT SEL	NOT SEL	3001	
FAULT	FAULT	FAULT	FAULT	FAULT	FAULT	FAULT	FAULT	3002	
NOT SEL	NOT SEL	NOT SEL	NOT SEL	NOT SEL	NOT SEL	NOT SEL	NOT SEL	3003	
NOT SEL	NOT SEL	NOT SEL	NOT SEL	NOT SEL	NOT SEL	NOT SEL	NOT SEL	3004	
FAULT	FAULT	FAULT	FAULT	FAULT	FAULT	FAULT	FAULT	3005	
1050 s	1050 s	1050 s	1050 s	1050 s	1050 s	1050 s	1050 s	3006	
100%	100%	100%	100%	100%	100%	100%	100%	3007	
70%	70%	70%	70%	70%	70%	70%	70%	3008	
35 Hz	35 Hz	35 Hz	35 Hz	35 Hz	35 Hz	35 Hz	35 Hz	3009	
NOT SEL	NOT SEL	NOT SEL	NOT SEL	NOT SEL	NOT SEL	NOT SEL	NOT SEL	3010	
20.0 Hz	20.0 Hz	20.0 Hz	20.0 Hz	20.0 Hz	20.0 Hz	20.0 Hz	20.0 Hz	3011	
20 s	20 s	20 s	20 s	20 s	20 s	20 s	20 s	3012	
ENABLE	ENABLE	ENABLE	ENABLE	ENABLE	ENABLE	ENABLE	ENABLE	3017	
NOT SEL	NOT SEL	NOT SEL	NOT SEL	NOT SEL	NOT SEL	NOT SEL	NOT SEL	3018	
10.0 s	10.0 s	10.0 s	10.0 s	10.0 s	10.0 s	10.0 s	10.0 s	3019	
0.0%	0.0%	0.0%	0.0%	0.0%	0.0%	0.0%	0.0%	3021	
0.0%	0.0%	0.0%	0.0%	0.0%	0.0%	0.0%	0.0%	3022	
ENABLE	ENABLE	ENABLE	ENABLE	ENABLE	ENABLE	ENABLE	ENABLE	3023	
1	1	1	1	1	1	1	1	3024	

	Parameter name	Par. index	HVAC default 1	Supply fan 2	Return fan 3	Cooling tower fan 4	Condenser 5	Booster pump 6
31 AUTOMATIC RESET	NUMBER OF TRIALS	3101	5	5	5	5	5	5
	TRIAL TIME	3102	30.0 s	30.0 s	30.0 s	30.0 s	30.0 s	30.0 s
	DELAY TIME	3103	6.0 s	6.0 s	6.0 s	6.0 s	6.0 s	6.0 s
	AR OVER-CURRENT	3104	DISABLE	DISABLE	DISABLE	DISABLE	DISABLE	DISABLE
	AR OVER-VOLTAGE	3105	ENABLE	ENABLE	ENABLE	ENABLE	ENABLE	ENABLE
	AR UNDER-VOLTAGE	3106	ENABLE	ENABLE	ENABLE	ENABLE	ENABLE	ENABLE
	AR AI<MIN	3107	ENABLE	ENABLE	ENABLE	ENABLE	ENABLE	ENABLE
	AR EXTERNAL FLT	3108	ENABLE	ENABLE	ENABLE	ENABLE	ENABLE	ENABLE
32 SUPER-VISION	SUPERV 1 PARAM	3201	OUTPUT FREQ	OUTPUT FREQ	OUTPUT FREQ	OUTPUT FREQ	OUTPUT FREQ	OUTPUT FREQ
	SUPERV 1 LIM LO	3202	50.0 Hz	50.0 Hz	50.0 Hz	50.0 Hz	50.0 Hz	50.0 Hz
	SUPERV 1 LIM HI	3203	50.0 Hz	50.0 Hz	50.0 Hz	50.0 Hz	50.0 Hz	50.0 Hz
	SUPERV 2 PARAM	3204	CURRENT	CURRENT	CURRENT	CURRENT	CURRENT	CURRENT
	SUPERV 2 LIM LO	3205	-	-	-	-	-	-
	SUPERV 2 LIM HI	3206	-	-	-	-	-	-
	SUPERV 3 PARAM	3207	TORQUE	OUTPUT FREQ	OUTPUT FREQ	OUTPUT FREQ	OUTPUT FREQ	OUTPUT FREQ
	SUPERV 3 LIM LO	3208	100.0%	100.0%	100.0%	100.0%	100.0%	100.0%
	SUPERV 3 LIM HI	3209	100.0%	100.0%	100.0%	100.0%	100.0%	100.0%
33 INFOR-MATION	FIRMWARE	3301	Firmware version	Firmware version	Firmware version	Firmware version	Firmware version	Firmware version
	LOADING PACKAGE	3302	0	0	0	0	0	0
	TEST DATE	3303	0	0	0	0	0	0
	DRIVE RATING	3304	-	-	-	-	-	-
	PARAMETER TABLE	3305	Par. table version	Par. table version	Par. table version	Par. table version	Par. table version	Par. table version

Pump alternation	Internal timer	Internal timer, c. speeds	Floating point	Dual setpoint PID	Dual setpoint PID, c. sp.	E-bypass	Hand control		
7	**8**	**9**	**10**	**11**	**12**	**13**	**14**	**Par. index**	**User**
5	5	5	5	5	5	5	5	3101	
30.0 s	30.0 s	30.0 s	30.0 s	30.0 s	30.0 s	30.0 s	30.0 s	3102	
6.0 s	6.0 s	6.0 s	6.0 s	6.0 s	6.0 s	6.0 s	6.0 s	3103	
DISABLE	DISABLE	DISABLE	DISABLE	DISABLE	DISABLE	DISABLE	DISABLE	3104	
DISABLE	ENABLE	ENABLE	ENABLE	ENABLE	DISABLE	ENABLE	ENABLE	3105	
ENABLE	ENABLE	ENABLE	ENABLE	ENABLE	ENABLE	ENABLE	ENABLE	3106	
ENABLE	ENABLE	ENABLE	ENABLE	ENABLE	DISABLE	ENABLE	ENABLE	3107	
ENABLE	ENABLE	ENABLE	ENABLE	ENABLE	ENABLE	ENABLE	ENABLE	3108	
OUTPUT FREQ	OUTPUT FREQ	OUTPUT FREQ	OUTPUT FREQ	OUTPUT FREQ	OUTPUT FREQ	OUTPUT FREQ	OUTPUT FREQ	3201	
50.0 Hz	50.0 Hz	50.0 Hz	50.0 Hz	50.0 Hz	50.0 Hz	50.0 Hz	50.0 Hz	3202	
50.0 Hz	50.0 Hz	50.0 Hz	50.0 Hz	50.0 Hz	50.0 Hz	50.0 Hz	50.0 Hz	3203	
CURRENT	CURRENT	CURRENT	CURRENT	CURRENT	CURRENT	CURRENT	CURRENT	3204	
-	-	-	-	-	-	-	-	3205	
-	-	-	-	-	-	-	-	3206	
OUTPUT FREQ	OUTPUT FREQ	OUTPUT FREQ	OUTPUT FREQ	OUTPUT FREQ	OUTPUT FREQ	OUTPUT FREQ	OUTPUT FREQ	3207	
100.0%	100.0%	100.0%	100.0%	100.0%	100.0%	100.0%	100.0%	3208	
100.0%	100.0%	100.0%	100.0%	100.0%	100.0%	100.0%	100.0%	3209	
Firmware version	Firmware version	Firmware version	Firmware version	Firmware version	Firmware version	Firmware version	Firmware version	3301	
0	0	0	0	0	0	0	0	3302	
0	0	0	0	0	0	0	0	3303	
-	-	-	-	-	-	-	-	3304	
Par. table version	Par. table version	Par. table version	Par. table version	Par. table version	Par. table version	Par. table version	Par. table version	3305	

	Parameter name	Par. index	HVAC default 1	Supply fan 2	Return fan 3	Cooling tower fan 4	Condenser 5	Booster pump 6
34 PANEL DISPLAY	SIGNAL 1 PARAM	3401	OUTPUT FREQ	OUTPUT FREQ	OUTPUT FREQ	OUTPUT FREQ	OUTPUT FREQ	OUTPUT FREQ
	SIGNAL 1 MIN	3402	0.0 Hz	0.0 Hz	0.0 Hz	0.0 Hz	0.0 Hz	0.0 Hz
	SIGNAL 1 MAX	3403	500.0/ 600.0 Hz	500.0/ 600.0 Hz	500.0/ 600.0 Hz	500.0/ 600.0 Hz	500.0/ 600.0 Hz	500.0/ 600.0 Hz
	OUTPUT 1 DSP FORM	3404	DIRECT	DIRECT	DIRECT	DIRECT	DIRECT	DIRECT
	OUTPUT 1 UNIT	3405	%	%	%	%	%	%
	OUTPUT 1 MIN	3406	0.0%	0.0%	0.0%	0.0%	0.0%	0.0%
	OUTPUT 1 MAX	3407	1000/ 833.3%	1000/ 833.3%	1000/ 833.3%	1000/ 833.3%	1000/ 833.3%	1000/ 833.3%
	SIGNAL 2 PARAM	3408	CURRENT	CURRENT	CURRENT	CURRENT	CURRENT	CURRENT
	SIGNAL 2 MIN	3409	0.0 A	0.0 A	0.0 A	0.0 A	0.0 A	0.0 A
	SIGNAL 2 MAX	3410	-	-	-	-	-	-
	OUTPUT 2 DSP FORM	3411	DIRECT	DIRECT	DIRECT	DIRECT	DIRECT	DIRECT
	OUTPUT 2 UNIT	3412	A	A	A	A	A	A
	OUTPUT 2 MIN	3413	0.0 A	0.0 A	0.0 A	0.0 A	0.0 A	0.0 A
	OUTPUT 2 MAX	3414	-	-	-	-	-	-
	SIGNAL 3 PARAM	3415	AI1	AI1	AI1	AI1	AI1	AI1
	SIGNAL 3 MIN	3416	0.0%	0.0%	0.0%	0.0%	0.0%	0.0%
	SIGNAL 3 MAX	3417	100.0%	100.0%	100.0%	100.0%	100.0%	100.0%
	OUTPUT 3 DSP FORM	3418	DIRECT	DIRECT	DIRECT	DIRECT	DIRECT	DIRECT
	OUTPUT 3 UNIT	3419	V/mA	V/mA	V/mA	V/mA	V/mA	V/mA
	OUTPUT 3 MIN	3420	0.0 V / 0.0 mA	0.0 V / 0.0 mA	0.0 V / 0.0 mA	0.0 V / 0.0 mA	0.0 V / 0.0 mA	0.0 V / 0.0 mA
	OUTPUT 3 MAX	3421	10.0 V / 20.0 mA	10.0 V / 20.0 mA	10.0 V / 20.0 mA	10.0 V / 20.0 mA	10.0 V / 20.0 mA	10.0 V / 20.0 mA
35 MOTOR TEMP MEAS	SENSOR TYPE	3501	NONE	NONE	NONE	NONE	NONE	NONE
	INPUT SELECTION	3502	AI1	AI1	AI1	AI1	AI1	AI1
	ALARM LIMIT	3503	130 °C / 4000 ohm / 0	130 °C / 4000 ohm / 0	130 °C / 4000 ohm / 0	130 °C / 4000 ohm / 0	130 °C / 4000 ohm / 0	130 °C / 4000 ohm / 0
	FAULT LIMIT	3504	130 °C / 4000 ohm / 0	130 °C / 4000 ohm / 0	130 °C / 4000 ohm / 0	130 °C / 4000 ohm / 0	130 °C / 4000 ohm / 0	130 °C / 4000 ohm / 0

Pump alternation	Internal timer	Internal timer, c. speeds	Floating point	Dual setpoint PID	Dual setpoint PID, c. sp.	E-bypass	Hand control		
7	**8**	**9**	**10**	**11**	**12**	**13**	**14**	**Par. index**	**User**
OUTPUT FREQ	OUTPUT FREQ	OUTPUT FREQ	OUTPUT FREQ	OUTPUT FREQ	OUTPUT FREQ	OUTPUT FREQ	OUTPUT FREQ	3401	
0.0 Hz	0.0 Hz	0.0 Hz	0.0 Hz	0.0 Hz	0.0 Hz	0.0 Hz	0.0 Hz	3402	
500.0/ 600.0 Hz	500.0/ 600.0 Hz	500.0/ 600.0 Hz	500.0/ 600.0 Hz	500.0/ 600.0 Hz	500.0/ 600.0 Hz	500.0/ 600.0 Hz	500.0/ 600.0 Hz	3403	
DIRECT	DIRECT	DIRECT	DIRECT	DIRECT	DIRECT	DIRECT	DIRECT	3404	
%	%	%	%	%	%	%	%	3405	
0.0%	0.0%	0.0%	0.0%	0.0%	0.0%	0.0%	0.0%	3406	
1000/ 833.3%	1000/ 833.3%	1000/ 833.3%	1000/ 833.3%	1000/ 833.3%	1000/ 833.3%	1000/ 833.3%	1000/ 833.3%	3407	
CURRENT	CURRENT	CURRENT	CURRENT	CURRENT	CURRENT	CURRENT	CURRENT	3408	
0.0 A	0.0 A	0.0 A	0.0 A	0.0 A	0.0 A	0.0 A	0.0 A	3409	
-	-	-	-	-	-	-	-	3410	
DIRECT	DIRECT	DIRECT	DIRECT	DIRECT	DIRECT	DIRECT	DIRECT	3411	
A	A	A	A	A	A	A	A	3412	
0.0 A	0.0 A	0.0 A	0.0 A	0.0 A	0.0 A	0.0 A	0.0 A	3413	
-	-	-	-	-	-	-	-	3414	
AI1	AI1	TORQUE	TORQUE	AI1	AI1	AI1	NOT SEL	3415	
0.0%	0.0%	-200.0%	-200.0%	0.0%	0.0%	0.0%	-	3416	
100.0%	100.0%	200.0%	200.0%	100.0%	100.0%	100.0%	-	3417	
DIRECT	DIRECT	DIRECT	DIRECT	DIRECT	DIRECT	DIRECT	DIRECT	3418	
V/mA	V/mA	%	%	V/mA	V/mA	V/mA	-	3419	
0.0 V / 0.0 mA	0.0 V / 0.0 mA	-200.0%	-200.0%	0.0 V / 0.0 mA	0.0 V / 0.0 mA	0.0 V / 0.0 mA	-	3420	
10.0 V / 20.0 mA	10.0 V / 20.0 mA	200.0%	200.0%	10.0 V / 20.0 mA	10.0 V / 20.0 mA	10.0 V / 20.0 mA	-	3421	
NONE	NONE	NONE	NONE	NONE	NONE	NONE	NONE	3501	
AI1	AI1	AI1	AI1	AI1	AI1	AI1	AI1	3502	
130 °C / 4000 ohm / 0	130 °C / 4000 ohm / 0	130 °C / 4000 ohm / 0	130 °C / 4000 ohm / 0	130 °C / 4000 ohm / 0	130 °C / 4000 ohm / 0	130 °C / 4000 ohm / 0	130 °C / 4000 ohm / 0	3503	
130 °C / 4000 ohm / 0	130 °C / 4000 ohm / 0	130 °C / 4000 ohm / 0	130 °C / 4000 ohm / 0	130 °C / 4000 ohm / 0	130 °C / 4000 ohm / 0	130 °C / 4000 ohm / 0	130 °C / 4000 ohm / 0	3504	

	Parameter name	Par. index	HVAC default 1	Supply fan 2	Return fan 3	Cooling tower fan 4	Condenser 5	Booster pump 6
36 TIMED FUNCTIONS	TIMERS ENABLE	3601	NOT SEL	NOT SEL	NOT SEL	NOT SEL	NOT SEL	NOT SEL
	START TIME 1	3602	0:00:00	0:00:00	0:00:00	0:00:00	0:00:00	0:00:00
	STOP TIME 1	3603	0:00:00	0:00:00	0:00:00	0:00:00	0:00:00	0:00:00
	START DAY 1	3604	MONDAY	MONDAY	MONDAY	MONDAY	MONDAY	MONDAY
	STOP DAY 1	3605	MONDAY	MONDAY	MONDAY	MONDAY	MONDAY	MONDAY
	START TIME 2	3606	0:00:00	0:00:00	0:00:00	0:00:00	0:00:00	0:00:00
	STOP TIME 2	3607	0:00:00	0:00:00	0:00:00	0:00:00	0:00:00	0:00:00
	START DAY 2	3608	MONDAY	MONDAY	MONDAY	MONDAY	MONDAY	MONDAY
	STOP DAY 2	3609	MONDAY	MONDAY	MONDAY	MONDAY	MONDAY	MONDAY
	START TIME 3	3610	0:00:00	0:00:00	0:00:00	0:00:00	0:00:00	0:00:00
	STOP TIME 3	3611	0:00:00	0:00:00	0:00:00	0:00:00	0:00:00	0:00:00
	START DAY 3	3612	MONDAY	MONDAY	MONDAY	MONDAY	MONDAY	MONDAY
	STOP DAY 3	3613	MONDAY	MONDAY	MONDAY	MONDAY	MONDAY	MONDAY
	START TIME 4	3614	0:00:00	0:00:00	0:00:00	0:00:00	0:00:00	0:00:00
	STOP TIME 4	3615	0:00:00	0:00:00	0:00:00	0:00:00	0:00:00	0:00:00
	START DAY 4	3616	MONDAY	MONDAY	MONDAY	MONDAY	MONDAY	MONDAY
	STOP DAY 4	3617	MONDAY	MONDAY	MONDAY	MONDAY	MONDAY	MONDAY
	BOOST SEL	3622	NOT SEL	NOT SEL	NOT SEL	NOT SEL	NOT SEL	NOT SEL
	BOOST TIME	3623	0:00:00	0:00:00	0:00:00	0:00:00	0:00:00	0:00:00
	TIMER 1 SRC	3626	NOT SEL	NOT SEL	NOT SEL	NOT SEL	NOT SEL	NOT SEL
	TIMER 2 SRC	3627	NOT SEL	NOT SEL	NOT SEL	NOT SEL	NOT SEL	NOT SEL
	TIMER 3 SRC	3628	NOT SEL	NOT SEL	NOT SEL	NOT SEL	NOT SEL	NOT SEL
	TIMER 4 SRC	3629	NOT SEL	NOT SEL	NOT SEL	NOT SEL	NOT SEL	NOT SEL

Pump alternation	Internal timer	Internal time, c. speeds	Floating point	Dual setpoint PID	Dual setpoint PID, c. sp.	E-bypass	Hand control		
7	8	9	10	11	12	13	14	Par. index	User
NOT SEL	DI1	DI1	NOT SEL	NOT SEL	NOT SEL	NOT SEL	NOT SEL	3601	
0:00:00	0:00:00	0:00:00	0:00:00	0:00:00	0:00:00	0:00:00	0:00:00	3602	
0:00:00	0:00:00	0:00:00	0:00:00	0:00:00	0:00:00	0:00:00	0:00:00	3603	
MONDAY	MONDAY	MONDAY	MONDAY	MONDAY	MONDAY	MONDAY	MONDAY	3604	
MONDAY	MONDAY	MONDAY	MONDAY	MONDAY	MONDAY	MONDAY	MONDAY	3605	
0:00:00	0:00:00	0:00:00	0:00:00	0:00:00	0:00:00	0:00:00	0:00:00	3606	
0:00:00	0:00:00	0:00:00	0:00:00	0:00:00	0:00:00	0:00:00	0:00:00	3607	
MONDAY	MONDAY	MONDAY	MONDAY	MONDAY	MONDAY	MONDAY	MONDAY	3608	
MONDAY	MONDAY	MONDAY	MONDAY	MONDAY	MONDAY	MONDAY	MONDAY	3609	
0:00:00	0:00:00	0:00:00	0:00:00	0:00:00	0:00:00	0:00:00	0:00:00	3610	
0:00:00	0:00:00	0:00:00	0:00:00	0:00:00	0:00:00	0:00:00	0:00:00	3611	
MONDAY	MONDAY	MONDAY	MONDAY	MONDAY	MONDAY	MONDAY	MONDAY	3612	
MONDAY	MONDAY	MONDAY	MONDAY	MONDAY	MONDAY	MONDAY	MONDAY	3613	
0:00:00	0:00:00	0:00:00	0:00:00	0:00:00	0:00:00	0:00:00	0:00:00	3614	
0:00:00	0:00:00	0:00:00	0:00:00	0:00:00	0:00:00	0:00:00	0:00:00	3615	
MONDAY	MONDAY	MONDAY	MONDAY	MONDAY	MONDAY	MONDAY	MONDAY	3616	
MONDAY	MONDAY	MONDAY	MONDAY	MONDAY	MONDAY	MONDAY	MONDAY	3617	
NOT SEL	DI3	DI3	NOT SEL	NOT SEL	NOT SEL	NOT SEL	NOT SEL	3622	
0:00:00	0:00:00	0:00:00	0:00:00	0:00:00	0:00:00	0:00:00	0:00:00	3623	
NOT SEL	P1+P2+P3 +P4+B	P1+P2+P3 +P4+B	NOT SEL	NOT SEL	NOT SEL	NOT SEL	NOT SEL	3626	
NOT SEL	NOT SEL	NOT SEL	NOT SEL	NOT SEL	NOT SEL	NOT SEL	NOT SEL	3627	
NOT SEL	NOT SEL	NOT SEL	NOT SEL	NOT SEL	NOT SEL	NOT SEL	NOT SEL	3628	
NOT SEL	NOT SEL	NOT SEL	NOT SEL	NOT SEL	NOT SEL	NOT SEL	NOT SEL	3629	

	Parameter name	Par. index	HVAC default 1	Supply fan 2	Return fan 3	Cooling tower fan 4	Condenser 5	Booster pump 6
37 USER LOAD CURVE	USER LOAD C MODE	3701	NOT SEL	NOT SEL	NOT SEL	NOT SEL	NOT SEL	NOT SEL
	USER LOAD C FUNC	3702	FAULT	FAULT	FAULT	FAULT	FAULT	FAULT
	USER LOAD C TIME	3703	20 s	20 s	20 s	20 s	20 s	20 s
	LOAD FREQ 1	3704	5 Hz	5 Hz	5 Hz	5 Hz	5 Hz	5 Hz
	LOAD TORQ LOW 1	3705	10%	10%	10%	10%	10%	10%
	LOAD TORQ HIGH 1	3706	300%	300%	300%	300%	300%	300%
	LOAD FREQ 2	3707	25 Hz	25 Hz	25 Hz	25 Hz	25 Hz	25 Hz
	LOAD TORQ LOW 2	3708	15%	15%	15%	15%	15%	15%
	LOAD TORQ HIGH 2	3709	300%	300%	300%	300%	300%	300%
	LOAD FREQ 3	3710	43 Hz	43 Hz	43 Hz	43 Hz	43 Hz	43 Hz
	LOAD TORQ LOW 3	3711	25%	25%	25%	25%	25%	25%
	LOAD TORQ HIGH 3	3712	300%	300%	300%	300%	300%	300%
	LOAD FREQ 4	3713	50 Hz	50 Hz	50 Hz	50 Hz	50 Hz	50 Hz
	LOAD TORQ LOW 4	3714	30%	30%	30%	30%	30%	30%
	LOAD TORQ HIGH 4	3715	300%	300%	300%	300%	300%	300%
	LOAD FREQ 5	3716	500 Hz	500 Hz	500 Hz	500 Hz	500 Hz	500 Hz
	LOAD TORQ LOW 5	3717	30%	30%	30%	30%	30%	30%
	LOAD TORQ HIGH 5	3718	300%	300%	300%	300%	300%	300%

Pump alternation	Internal timer	Internal time, c. speeds	Floating point	Dual setpoint PID	Dual setpoint PID, c. sp.	E-bypass	Hand control		
7	8	9	10	11	12	13	14	Par. index	User
NOT SEL	NOT SEL	NOT SEL	NOT SEL	NOT SEL	NOT SEL	NOT SEL	NOT SEL	3701	
FAULT	FAULT	FAULT	FAULT	FAULT	FAULT	FAULT	FAULT	3702	
20 s	20 s	20 s	20 s	20 s	20 s	20 s	20 s	3703	
5 Hz	5 Hz	5 Hz	5 Hz	5 Hz	5 Hz	5 Hz	5 Hz	3704	
10%	10%	10%	10%	10%	10%	10%	10%	3705	
300%	300%	300%	300%	300%	300%	300%	300%	3706	
25 Hz	25 Hz	25 Hz	25 Hz	25 Hz	25 Hz	25 Hz	25 Hz	3707	
15%	15%	15%	15%	15%	15%	15%	15%	3708	
300%	300%	300%	300%	300%	300%	300%	300%	3709	
43 Hz	43 Hz	43 Hz	43 Hz	43 Hz	43 Hz	43 Hz	43 Hz	3710	
25%	25%	25%	25%	25%	25%	25%	25%	3711	
300%	300%	300%	300%	300%	300%	300%	300%	3712	
50 Hz	50 Hz	50 Hz	50 Hz	50 Hz	50 Hz	50 Hz	50 Hz	3713	
30%	30%	30%	30%	30%	30%	30%	30%	3714	
300%	300%	300%	300%	300%	300%	300%	300%	3715	
500 Hz	500 Hz	500 Hz	500 Hz	500 Hz	500 Hz	500 Hz	500 Hz	3716	
30%	30%	30%	30%	30%	30%	30%	30%	3717	
300%	300%	300%	300%	300%	300%	300%	300%	3718	

	Parameter name	Par. index	HVAC default 1	Supply fan 2	Return fan 3	Cooling tower fan 4	Condenser 5	Booster pump 6
40 PROCESS PID SET 1	GAIN	4001	2.5	0.7	0.7	2.5	2.5	2.5
	INTEGRATION TIME	4002	3.0 s	10.0 s	10.0 s	3.0 s	3.0 s	3.0 s
	DERIVATION TIME	4003	0.0 s	0.0 s	0.0 s	0.0 s	0.0 s	0.0 s
	PID DERIV FILTER	4004	1.0 s	1.0 s	1.0 s	1.0 s	1.0 s	1.0 s
	ERROR VALUE INV	4005	NO	NO	NO	NO	YES	NO
	UNITS	4006	%	%	%	%	%	%
	UNIT SCALE	4007	1	1	1	1	1	1
	0% VALUE	4008	0.0%	0.0%	0.0%	0.0%	0.0%	0.0%
	100% VALUE	4009	100.0%	100.0%	100.0%	100.0%	100.0%	100.0%
	SET POINT SEL	4010	KEYPAD	KEYPAD	KEYPAD	KEYPAD	KEYPAD	KEYPAD
	INTERNAL SETPNT	4011	40.0%	40.0%	40.0%	40.0%	40.0%	40.0%
	SETPOINT MIN	4012	0.0%	0.0%	0.0%	0.0%	0.0%	0.0%
	SETPOINT MAX	4013	100.0%	100.0%	100.0%	100.0%	100.0%	100.0%
	FBK SEL	4014	ACT1	ACT1	ACT1	ACT1	ACT1	ACT1
	FBK MULTIPLIER	4015	NOT SEL	NOT SEL	NOT SEL	NOT SEL	NOT SEL	NOT SEL
	ACT1 INPUT	4016	AI2	AI2	AI2	AI2	AI2	AI2
	ACT2 INPUT	4017	AI2	AI2	AI2	AI2	AI2	AI2
	ACT1 MINIMUM	4018	0%	0%	0%	0%	0%	0%
	ACT1 MAXIMUM	4019	100%	100%	100%	100%	100%	100%
	ACT2 MINIMUM	4020	0%	0%	0%	0%	0%	0%
	ACT2 MAXIMUM	4021	100%	100%	100%	100%	100%	100%
	SLEEP SELECTION	4022	NOT SEL	NOT SEL	NOT SEL	NOT SEL	NOT SEL	NOT SEL
	PID SLEEP LEVEL	4023	0.0 Hz	0.0 Hz	0.0 Hz	0.0 Hz	0.0 Hz	0.0 Hz
	PID SLEEP DELAY	4024	60.0 s	60.0 s	60.0 s	60.0 s	60.0 s	60.0 s
	WAKE-UP DEV	4025	0.0%	0.0%	0.0%	0.0%	0.0%	0.0%
	WAKE-UP DELAY	4026	0.50 s	0.50 s	0.50 s	0.50 s	0.50 s	0.50 s
	PID 1 PARAM SET	4027	SET 1	SET 1	SET 1	SET 1	SET 1	SET 1

Pump alternation	Internal timer	Internal time, c. speeds	Floating point	Dual setpoint PID	Dual setpoint PID, c. sp.	E-bypass	Hand control		
7	8	9	10	11	12	13	14	Par. index	User
2.5	2.5	1.0	2.5	2.5	0.7	2.5	1.0	4001	
3.0 s	3.0 s	60.0 s	3.0 s	3.0 s	10.0 s	3.0 s	60.0 s	4002	
0.0 s	0.0 s	0.0 s	0.0 s	0.0 s	0.0 s	0.0 s	0.0 s	4003	
1.0 s	1.0 s	1.0 s	1.0 s	1.0 s	1.0 s	1.0 s	1.0 s	4004	
NO	NO	NO	NO	NO	NO	NO	NO	4005	
%	%	%	%	%	%	%	%	4006	
1	1	1	1	1	1	1	1	4007	
0.0%	0.0%	0.0%	0.0%	0.0%	0.0%	0.0%	0.0%	4008	
100.0%	100.0%	100.0%	100.0%	100.0%	100.0%	100.0%	100.0%	4009	
KEYPAD	KEYPAD	AI1	KEYPAD	INTERNAL	INTERNAL	KEYPAD	AI1	4010	
40.0%	40.0%	40.0%	40.0%	50.0%	50.0%	40.0%	40.0%	4011	
0.0%	0.0%	0.0%	0.0%	0.0%	0.0%	0.0%	0.0%	4012	
100.0%	100.0%	100.0%	100.0%	100.0%	100.0%	100.0%	100.0%	4013	
ACT1	ACT1	ACT1	ACT1	ACT1	ACT1	ACT1	ACT1	4014	
NOT SEL	NOT SEL	NOT SEL	NOT SEL	NOT SEL	NOT SEL	NOT SEL	NOT SEL	4015	
AI2	AI2	AI2	AI2	AI2	AI2	AI2	AI2	4016	
AI2	AI2	AI2	AI2	AI2	AI2	AI2	AI2	4017	
0%	0%	0%	0%	0%	0%	0%	0%	4018	
100%	100%	100%	100%	100%	100%	100%	100%	4019	
0%	0%	0%	0%	0%	0%	0%	0%	4020	
100%	100%	100%	100%	100%	100%	100%	100%	4021	
NOT SEL	NOT SEL	NOT SEL	NOT SEL	NOT SEL	NOT SEL	NOT SEL	NOT SEL	4022	
0.0 Hz	0.0 Hz	0.0 Hz	0.0 Hz	0.0 Hz	0.0 Hz	0.0 Hz	0.0 Hz	4023	
60.0 s	60.0 s	60.0 s	60.0 s	60.0 s	60.0 s	60.0 s	60.0 s	4024	
0.0%	0.0%	0.0%	0.0%	0.0%	0.0%	0.0%	0.0%	4025	
0.50 s	0.50 s	0.50 s	0.50 s	0.50 s	0.50 s	0.50 s	0.50 s	4026	
SET 1	SET 1	SET 1	SET 1	DI3	DI3	SET 1	SET 1	4027	

	Parameter name	Par. index	HVAC default 1	Supply fan 2	Return fan 3	Cooling tower fan 4	Condenser 5	Booster pump 6
41 PROCESS PID SET 2	GAIN	4101	2.5	1.0	1.0	1.0	1.0	1.0
	INTEGRATION TIME	4102	3.0 s	60.0 s	60.0 s	60.0 s	60.0 s	60.0 s
	DERIVATION TIME	4103	0.0 s	0.0 s	0.0 s	0.0 s	0.0 s	0.0 s
	PID DERIV FILTER	4104	1.0 s	1.0 s	1.0 s	1.0 s	1.0 s	1.0 s
	ERROR VALUE INV	4105	NO	NO	NO	NO	NO	NO
	UNITS	4106	%	%	%	%	%	%
	UNIT SCALE	4107	1	1	1	1	1	1
	0% VALUE	4108	0.0%	0.0%	0.0%	0.0%	0.0%	0.0%
	100% VALUE	4109	100.0%	100.0%	100.0%	100.0%	100.0%	100.0%
	SET POINT SEL	4110	KEYPAD	KEYPAD	KEYPAD	KEYPAD	KEYPAD	KEYPAD
	INTERNAL SETPNT	4111	40.0%	40.0%	40.0%	40.0%	40.0%	40.0%
	SETPOINT MIN	4112	0.0%	0.0%	0.0%	0.0%	0.0%	0.0%
	SETPOINT MAX	4113	100.0%	100.0%	100.0%	100.0%	100.0%	100.0%
	FBK SEL	4114	ACT1	ACT1	ACT1	ACT1	ACT1	ACT1
	FBK MULTIPLIER	4115	NOT SEL	NOT SEL	NOT SEL	NOT SEL	NOT SEL	NOT SEL
	ACT1 INPUT	4116	AI2	AI2	AI2	AI2	AI2	AI2
	ACT2 INPUT	4117	AI2	AI2	AI2	AI2	AI2	AI2
	ACT1 MINIMUM	4118	0%	0%	0%	0%	0%	0%
	ACT1 MAXIMUM	4119	100%	100%	100%	100%	100%	100%
	ACT2 MINIMUM	4120	0%	0%	0%	0%	0%	0%
	ACT2 MAXIMUM	4121	100%	100%	100%	100%	100%	100%
	SLEEP SELECTION	4122	NOT SEL	NOT SEL	NOT SEL	NOT SEL	NOT SEL	NOT SEL
	PID SLEEP LEVEL	4123	0.0 Hz	0.0 Hz	0.0 Hz	0.0 Hz	0.0 Hz	0.0 Hz
	PID SLEEP DELAY	4124	60.0 s	60.0 s	60.0 s	60.0 s	60.0 s	60.0 s
	WAKE-UP DEV	4125	0.0%	0.0%	0.0%	0.0%	0.0%	0.0%
	WAKE-UP DELAY	4126	0.50 s	0.50 s	0.50 s	0.50 s	0.50 s	0.50 s

Pump alternation	Internal timer	Internal timer, c. speeds	Floating point	Dual setpoint PID	Dual setpoint PID, c. sp.	E-bypass	Hand control		
7	8	9	10	11	12	13	14	Par. index	User
1.0	2.5	1.0	2.5	2.5	0.7	2.5	1.0	4101	
60.0 s	3.0 s	60.0 s	3.0 s	3.0 s	10.0 s	3.0 s	60.0 s	4102	
0.0 s	0.0 s	0.0 s	0.0 s	0.0 s	0.0 s	0.0 s	0.0 s	4103	
1.0 s	1.0 s	1.0 s	1.0 s	1.0 s	1.0 s	1.0 s	1.0 s	4104	
NO	NO	NO	NO	NO	NO	NO	NO	4105	
%	%	%	%	%	%	%	%	4106	
1	1	1	1	1	1	1	1	4107	
0.0%	0.0%	0.0%	0.0%	0.0%	0.0%	0.0%	0.0%	4108	
100.0%	100.0%	100.0%	100.0%	100.0%	100.0%	100.0%	100.0%	4109	
KEYPAD	KEYPAD	AI1	KEYPAD	INTERNAL	INTERNAL	KEYPAD	AI1	4110	
40.0%	40.0%	40.0%	40.0%	100.0%	100.0%	40.0%	40.0%	4111	
0.0%	0.0%	0.0%	0.0%	0.0%	0.0%	0.0%	0.0%	4112	
100.0%	100.0%	100.0%	100.0%	100.0%	100.0%	100.0%	100.0%	4113	
ACT1	ACT1	ACT1	ACT1	ACT1	ACT1	ACT1	ACT1	4114	
NOT SEL	NOT SEL	NOT SEL	NOT SEL	NOT SEL	NOT SEL	NOT SEL	NOT SEL	4115	
AI2	AI2	AI2	AI2	AI2	AI2	AI2	AI2	4116	
AI2	AI2	AI2	AI2	AI2	AI2	AI2	AI2	4117	
0%	0%	0%	0%	0%	0%	0%	0%	4118	
100%	100%	100%	100%	100%	100%	100%	100%	4119	
0%	0%	0%	0%	0%	0%	0%	0%	4120	
100%	100%	100%	100%	100%	100%	100%	100%	4121	
NOT SEL	NOT SEL	NOT SEL	NOT SEL	NOT SEL	NOT SEL	NOT SEL	NOT SEL	4122	
0.0 Hz	0.0 Hz	0.0 Hz	0.0 Hz	0.0 Hz	0.0 Hz	0.0 Hz	0.0 Hz	4123	
60.0 s	60.0 s	60.0 s	60.0 s	60.0 s	60.0 s	60.0 s	60.0 s	4124	
0.0%	0.0%	0.0%	0.0%	0.0%	0.0%	0.0%	0.0%	4125	
0.50 s	0.50 s	0.50 s	0.50 s	0.50 s	0.50 s	0.50 s	0.50 s	4126	

	Parameter name	Par. index	HVAC default 1	Supply fan 2	Return fan 3	Cooling tower fan 4	Condenser 5	Booster pump 6
42 EXT / TRIM PID	GAIN	4201	1.0	1.0	1.0	1.0	1.0	1.0
	INTEGRATION TIME	4202	60.0 s	60.0 s	60.0 s	60.0 s	60.0 s	60.0 s
	DERIVATION TIME	4203	0.0 s	0.0 s	0.0 s	0.0 s	0.0 s	0.0 s
	PID DERIV FILTER	4204	1.0 s	1.0 s	1.0 s	1.0 s	1.0 s	1.0 s
	ERROR VALUE INV	4205	NO	NO	NO	NO	NO	NO
	UNITS	4206	%	%	%	%	%	%
	UNIT SCALE	4207	1	1	1	1	1	1
	0% VALUE	4208	0.0%	0.0%	0.0%	0.0%	0.0%	0.0%
	100% VALUE	4209	100.0%	100.0%	100.0%	100.0%	100.0%	100.0%
	SET POINT SEL	4210	INTERNAL	INTERNAL	INTERNAL	INTERNAL	INTERNAL	INTERNAL
	INTERNAL SETPNT	4211	40.0%	40.0%	40.0%	40.0%	40.0%	40.0%
	SETPOINT MIN	4212	0.0%	0.0%	0.0%	0.0%	0.0%	0.0%
	SETPOINT MAX	4213	100.0%	100.0%	100.0%	100.0%	100.0%	100.0%
	FBK SEL	4214	ACT1	ACT1	ACT1	ACT1	ACT1	ACT1
	FBK MULTIPLIER	4215	NOT SEL	NOT SEL	NOT SEL	NOT SEL	NOT SEL	NOT SEL
	ACT1 INPUT	4216	AI2	AI2	AI2	AI2	AI2	AI2
	ACT2 INPUT	4217	AI2	AI2	AI2	AI2	AI2	AI2
	ACT1 MINIMUM	4218	0%	0%	0%	0%	0%	0%
	ACT1 MAXIMUM	4219	100%	100%	100%	100%	100%	100%
	ACT2 MINIMUM	4220	0%	0%	0%	0%	0%	0%
	ACT2 MAXIMUM	4221	100%	100%	100%	100%	100%	100%
	ACTIVATE	4228	NOT SEL	NOT SEL	NOT SEL	NOT SEL	NOT SEL	NOT SEL
	OFFSET	4229	0.0%	0.0%	0.0%	0.0%	0.0%	0.0%
	TRIM MODE	4230	NOT SEL	NOT SEL	NOT SEL	NOT SEL	NOT SEL	NOT SEL
	TRIM SCALE	4231	100.0%	100.0%	100.0%	100.0%	100.0%	100.0%
	CORRECTION SRC	4232	PID2 REF	PID2 REF	PID2 REF	PID2 REF	PID2 REF	PID2 REF

Pump alternation	Internal timer	Internal timer, c. speeds	Floating point	Dual setpoint PID	Dual setpoint PID, c. sp.	E-bypass	Hand control		
7	8	9	10	11	12	13	14	Par. index	User
1.0	1.0	1.0	1.0	1.0	1.0	1.0	1.0	4201	
60.0 s	60.0 s	60.0 s	60.0 s	60.0 s	60.0 s	60.0 s	60.0 s	4202	
0.0 s	0.0 s	0.0 s	0.0 s	0.0 s	0.0 s	0.0 s	0.0 s	4203	
1.0 s	1.0 s	1.0 s	1.0 s	1.0 s	1.0 s	1.0 s	1.0 s	4204	
NO	NO	NO	NO	NO	NO	NO	NO	4205	
%	%	%	%	%	%	%	%	4206	
1	1	1	1	1	1	1	1	4207	
0.0%	0.0%	0.0%	0.0%	0.0%	0.0%	0.0%	0.0%	4208	
100.0%	100.0%	100.0%	100.0%	100.0%	100.0%	100.0%	100.0%	4209	
INTERNAL	INTERNAL	INTERNAL	INTERNAL	INTERNAL	INTERNAL	INTERNAL	AI1	4210	
40.0%	40.0%	40.0%	40.0%	40.0%	40.0%	40.0%	40.0%	4211	
0.0%	0.0%	0.0%	0.0%	0.0%	0.0%	0.0%	0.0%	4212	
100.0%	100.0%	100.0%	100.0%	100.0%	100.0%	100.0%	100.0%	4213	
ACT1	ACT1	ACT1	ACT1	ACT1	ACT1	ACT1	ACT1	4214	
NOT SEL	NOT SEL	NOT SEL	NOT SEL	NOT SEL	NOT SEL	NOT SEL	NOT SEL	4215	
AI2	AI2	AI2	AI2	AI2	AI2	AI2	AI2	4216	
AI2	AI2	AI2	AI2	AI2	AI2	AI2	AI2	4217	
0%	0%	0%	0%	0%	0%	0%	0%	4218	
100%	100%	100%	100%	100%	100%	100%	100%	4219	
0%	0%	0%	0%	0%	0%	0%	0%	4220	
100%	100%	100%	100%	100%	100%	100%	100%	4221	
NOT SEL	NOT SEL	NOT SEL	NOT SEL	NOT SEL	NOT SEL	NOT SEL	NOT SEL	4228	
0.0%	0.0%	0.0%	0.0%	0.0%	0.0%	0.0%	0.0%	4229	
NOT SEL	NOT SEL	NOT SEL	NOT SEL	NOT SEL	NOT SEL	NOT SEL	NOT SEL	4230	
100.0%	100.0%	100.0%	100.0%	100.0%	100.0%	100.0%	100.0%	4231	
PID2 REF	PID2 REF	PID2 REF	PID2 REF	PID2 REF	PID2 REF	PID2 REF	PID2 REF	4232	

	Parameter name	Par. index	HVAC default 1	Supply fan 2	Return fan 3	Cooling tower fan 4	Condenser 5	Booster pump 6
51 EXT COMM MODULE	FBA TYPE	5101	NOT DEFINED	NOT DEFINED	NOT DEFINED	NOT DEFINED	NOT DEFINED	NOT DEFINED
	FBA PAR 2…26	5102 …	0	0	0	0	0	0
	FBA PAR REFRESH	5127	0	0	0	0	0	0
	FILE CPI FW REV	5128	0	0	0	0	0	0
	FILE CONFIG ID	5129	0	0	0	0	0	0
	FILE CONFIG REV	2130	0	0	0	0	0	0
	FBA STATUS	5131	0	0	0	0	0	0
	FBA CPI FW REV	5132	0	0	0	0	0	0
	FBA APPL FW REV	5133	0	0	0	0	0	0
52 PANEL COMM	STATION ID	5201	1	1	1	1	1	1
	BAUD RATE	5202	9.6 kb/s	9.6 kb/s	9.6 kb/s	9.6 kb/s	9.6 kb/s	9.6 kb/s
	PARITY	5203	0	0	0	0	0	0
	OK MESSAGES	5204	-	-	-	-	-	-
	PARITY ERRORS	5205	-	-	-	-	-	-
	FRAME ERRORS	5206	-	-	-	-	-	-
	BUFFER OVERRUNS	5207	-	-	-	-	-	-
	CRC ERRORS	5208	-	-	-	-	-	-
53 EFB PROTOCOL	EFB PROTOCOL ID	5301	0	0	0	0	0	0
	EFB STATION ID	5302	1	1	1	1	1	1
	EFB BAUD RATE	5303	9.6 kb/s	9.6kibs/s	9.6kibs/s	9.6kibs/s	9.6kibs/s	9.6kibs/s
	EFB PARITY	5304	0	0	0	0	0	0
	EFB CTRL PROFILE	5305	0	0	0	0	0	0
	EFB OK MESSAGES	5306	0	0	0	0	0	0
	EFB CRC ERRORS	5307	0	0	0	0	0	0
	EFB UART ERRORS	5308	0	0	0	0	0	0
	EFB STATUS	5309	0	0	0	0	0	0
	EFB PAR 10…20	5310 …	0	0	0	0	0	0

Pump alternation	Internal timer	Internal timer, c. speeds	Floating point	Dual setpoint PID	Dual setpoint PID, c. sp.	E-bypass	Hand control		
7	**8**	**9**	**10**	**11**	**12**	**13**	**14**	**Par. index**	**User**
NOT DEFINED	NOT DEFINED	NOT DEFINED	NOT DEFINED	NOT DEFINED	NOT DEFINED	NOT DEFINED	NOT DEFINED	5101	
0	0	0	0	0	0	0	0	5102… 5126	
0	0	0	0	0	0	0	0	5127	
0	0	0	0	0	0	0	0	5128	
0	0	0	0	0	0	0	0	5129	
0	0	0	0	0	0	0	0	2130	
0	0	0	0	0	0	0	0	5131	
0	0	0	0	0	0	0	0	5132	
0	0	0	0	0	0	0	0	5133	
1	1	1	1	1	1	1	1	5201	
9.6 kb/s	9.6 kb/s	9.6 kb/s	9.6 kb/s	9.6 kb/s	9.6 kb/s	9.6 kb/s	9.6 kb/s	5202	
0	0	0	0	0	0	0	0	5203	
-	-	-	-	-	-	-	-	5204	
-	-	-	-	-	-	-	-	5205	
-	-	-	-	-	-	-	-	5206	
-	-	-	-	-	-	-	-	5207	
-	-	-	-	-	-	-	-	5208	
0	0	0	0	0	0	0	0	5301	
1	1	1	1	1	1	1	1	5302	
9.6 kb/s	9.6 kb/s	9.6 kb/s	9.6 kb/s	9.6 kb/s	9.6 kb/s	9.6 kb/s	9.6 kb/s	5303	
0	0	0	0	0	0	0	0	5304	
0	0	0	0	0	0	0	0	5305	
0	0	0	0	0	0	0	0	5306	
0	0	0	0	0	0	0	0	5307	
0	0	0	0	0	0	0	0	5308	
0	0	0	0	0	0	0	0	5309	
0	0	0	0	0	0	0	0	5310… 5320	

	Parameter name	Par. index	HVAC default 1	Supply fan 2	Return fan 3	Cooling tower fan 4	Condenser 5	Booster pump 6
81 PFA CONTROL	REFERENCE STEP 1	8103	0.0%	0.0%	0.0%	0.0%	0.0%	0.0%
	REFERENCE STEP 2	8104	0.0%	0.0%	0.0%	0.0%	0.0%	0.0%
	REFERENCE STEP 3	8105	0.0%	0.0%	0.0%	0.0%	0.0%	0.0%
	START FREQ 1	8109	50.0 Hz	50.0 Hz	50.0 Hz	50.0 Hz	50.0 Hz	50.0 Hz
	START FREQ 2	8110	50.0 Hz	50.0 Hz	50.0 Hz	50.0 Hz	50.0 Hz	50.0 Hz
	START FREQ 3	8111	50.0 Hz	50.0 Hz	50.0 Hz	50.0 Hz	50.0 Hz	50.0 Hz
	LOW FREQ 1	8112	25.0 Hz	25.0 Hz	25.0 Hz	25.0 Hz	25.0 Hz	25.0 Hz
	LOW FREQ 2	8113	25.0 Hz	25.0 Hz	25.0 Hz	25.0 Hz	25.0 Hz	25.0 Hz
	LOW FREQ 3	8114	25.0 Hz	25.0 Hz	25.0 Hz	25.0 Hz	25.0 Hz	25.0 Hz
	AUX MOT START D	8115	5.0 s	5.0 s	5.0 s	5.0 s	5.0 s	5.0 s
	AUX MOT STOP D	8116	3.0 s	3.0 s	3.0 s	3.0 s	3.0 s	3.0 s
	NR OF AUX MOT	8117	1	1	1	1	1	1
	AUTOCHNG INTERV	8118	NOT SEL	NOT SEL	NOT SEL	NOT SEL	NOT SEL	NOT SEL
	AUTOCHNG LEVEL	8119	50.0%	50.0%	50.0%	50.0%	50.0%	50.0%
	INTERLOCKS	8120	DI4	DI4	DI4	DI4	DI4	DI4
	REG BYPASS CTRL	8121	NO	NO	NO	NO	NO	NO
	PFA START DELAY	8122	0.50 s	0.50 s	0.50 s	0.50 s	0.50 s	0.50 s
	PFA ENABLE	8123	NOT SEL	NOT SEL	NOT SEL	NOT SEL	NOT SEL	NOT SEL
	ACC IN AUX STOP	8124	NOT SEL	NOT SEL	NOT SEL	NOT SEL	NOT SEL	NOT SEL
	DEC IN AUX START	8125	NOT SEL	NOT SEL	NOT SEL	NOT SEL	NOT SEL	NOT SEL
	TIMED AUTOCHNG	8126	NOT SEL	NOT SEL	NOT SEL	NOT SEL	NOT SEL	NOT SEL
	MOTORS	8127	2	2	2	2	2	2
	AUX START ORDER	8128	EVEN RUNTIME	EVEN RUNTIME	EVEN RUNTIME	EVEN RUNTIME	EVEN RUNTIME	EVEN RUNTIME
98 OPTIONS	COMM PROT SEL	9802	NOT SEL	NOT SEL	NOT SEL	NOT SEL	NOT SEL	NOT SEL

Pump alternation	Internal timer	Internal timer, c. speeds	Floating point	Dual setpoint PID	Dual setpoint PID, c. sp.	E-bypass	Hand control		
7	8	9	10	11	12	13	14	Par. index	User
0.0%	0.0%	0.0%	0.0%	0.0%	0.0%	0.0%	0.0%	8103	
0.0%	0.0%	0.0%	0.0%	0.0%	0.0%	0.0%	0.0%	8104	
0.0%	0.0%	0.0%	0.0%	0.0%	0.0%	0.0%	0.0%	8105	
50.0 Hz	50.0 Hz	50.0 Hz	50.0 Hz	50.0 Hz	50.0 Hz	50.0 Hz	50.0 Hz	8109	
50.0 Hz	50.0 Hz	50.0 Hz	50.0 Hz	50.0 Hz	50.0 Hz	50.0 Hz	50.0 Hz	8110	
50.0 Hz	50.0 Hz	50.0 Hz	50.0 Hz	50.0 Hz	50.0 Hz	50.0 Hz	50.0 Hz	8111	
25.0 Hz	25.0 Hz	25.0 Hz	25.0 Hz	25.0 Hz	25.0 Hz	25.0 Hz	25.0 Hz	8112	
25.0 Hz	25.0 Hz	25.0 Hz	25.0 Hz	25.0 Hz	25.0 Hz	25.0 Hz	25.0 Hz	8113	
25.0 Hz	25.0 Hz	25.0 Hz	25.0 Hz	25.0 Hz	25.0 Hz	25.0 Hz	25.0 Hz	8114	
5.0 s	5.0 s	5.0 s	5.0 s	5.0 s	5.0 s	5.0 s	5.0 s	8115	
3.0 s	3.0 s	3.0 s	3.0 s	3.0 s	3.0 s	3.0 s	3.0 s	8116	
1	1	1	1	1	1	1	1	8117	
NOT SEL	NOT SEL	NOT SEL	NOT SEL	NOT SEL	NOT SEL	NOT SEL	NOT SEL	8118	
50.0%	50.0%	50.0%	50.0%	50.0%	50.0%	50.0%	50.0%	8119	
DI4	DI4	DI4	DI4	DI4	DI4	DI4	DI4	8120	
NO	NO	NO	NO	NO	NO	NO	NO	8121	
0.50 s	0.50 s	0.50 s	0.50 s	0.50	0.50	0.50 s	0.50 s	8122	
ACTIVE	NOT SEL	NOT SEL	NOT SEL	NOT SEL	NOT SEL	NOT SEL	NOT SEL	8123	
NOT SEL	NOT SEL	NOT SEL	NOT SEL	NOT SEL	NOT SEL	NOT SEL	NOT SEL	8124	
NOT SEL	NOT SEL	NOT SEL	NOT SEL	NOT SEL	NOT SEL	NOT SEL	NOT SEL	8125	
NOT SEL	NOT SEL	NOT SEL	NOT SEL	NOT SEL	NOT SEL	NOT SEL	NOT SEL	8126	
2	2	2	2	2	2	2	2	8127	
EVEN RUNTIME	EVEN RUNTIME	EVEN RUNTIME	EVEN RUNTIME	EVEN RUNTIME	EVEN RUNTIME	EVEN RUNTIME	EVEN RUNTIME	8128	
NOT SEL	NOT SEL	NOT SEL	NOT SEL	NOT SEL	NOT SEL	NOT SEL	NOT SEL	9802	

Diagnostics and maintenance

What this chapter contains

This chapter contains information on fault diagnostics, fault correction, resetting and maintaining the drive.

WARNING! Do not attempt any measurement, parts replacement or other service procedure not described in this manual. Such action will void the warranty, may endanger correct operation, and increase downtime and expense.

WARNING! All electrical installation and maintenance work described in this chapter should only be undertaken by qualified service personnel. The safety instructions on page *6* must be followed.

Diagnostics displays

The drive detects error situations and reports them using:

- green and red LED on the body of the drive
- status LED on the control panel (if a HVAC control panel is attached to the drive)
- control panel display (if a HVAC control panel is attached to the drive)
- Fault Word and Alarm Word parameter bits (parameters 0305 to 0309). See *Group 03: FB ACTUAL SIGNALS*.

The form of the display depends on the severity of the error. You can specify the severity for many errors by directing the drive to:

- ignore the error situation
- report the situation as an alarm
- report the situation as a fault.

Red – faults

The drive signals that it has detected a severe error, or fault, by:

- enabling the red LED on the drive (LED is either steady or flashing)
- showing the steady red status LED on the control panel (if attached to the drive)
- setting an appropriate bit in a Fault Word parameter (0305 to 0307)
- overriding the control panel display with the display of a fault code
- stopping the motor (if it was on).

The fault code on the control panel display is temporary. Pressing any of the following keys removes the fault message: MENU, ENTER, UP or DOWN key. The message reappears after a few seconds if the control panel is not touched and the fault is still active.

Flashing green – alarms

For less severe errors, called alarms, the diagnostic display is advisory. For these situations, the drive is simply reporting that it had detected something “unusual”. In these situations, the drive:

- flashes the green LED on the drive (does not apply to alarms that arise from control panel operation errors)
- flashes the green status LED on the control panel (if attached to the drive)
- sets an appropriate bit in an Alarm Word parameter (0308 or 0309). See *Group 03: FB ACTUAL SIGNALS* for bit definitions.
- overrides the control panel display with the display of an alarm code and/or name.

Alarm messages disappear from the control panel display after a few seconds. The message returns periodically as long as the alarm condition exists.

Correcting faults

The recommended corrective action for faults is:

1. Use the *Fault listing* table on page *353* to find and address the root cause of the problem.
2. Reset the drive. See section *Fault resetting* on page *362*.

Fault listing

The following table lists the faults by code number and describes each. The fault name is the long form shown on the control panel display when the fault occurs. The fault names shown in the Fault logger mode (see page *83*) and the fault names for parameter 0401 LAST FAULT may be shorter.

Fault code	Fault name in the panel	Description and recommended corrective action
1	OVERCURRENT	Output current is excessive. Check for and correct: • excessive motor load • insufficient acceleration time (parameters 2202 ACCELER TIME 1 and 2205 ACCELER TIME 2) • faulty motor, motor cables or connections.

Fault code	Fault name in the panel	Description and recommended corrective action
2	DC OVERVOLT	Intermediate circuit DC voltage is excessive. Check for and correct: • static or transient over voltages in the input power supply • insufficient deceleration time (parameters 2203 DECELER TIME 1 and 2206 DECELER TIME 2) • undersized brake chopper (if present).
3	DEV OVERTEMP	Drive heatsink is overheated. Temperature is at or above limit. R1…R4: 115 °C (239 °F) R5/R6: 125 °C (257 °F). Check for and correct: • fan failure • obstructions in the air flow • dirt or dust coating on the heat sink • excessive ambient temperature • excessive motor load.
4	SHORT CIRC	Fault current. Check for and correct: • a short-circuit in the motor cable(s) or motor • supply disturbances.
5	RESERVED	Not used.
6	DC UNDERVOLT	Intermediate circuit DC voltage is not sufficient. Check for and correct: • missing phase in the input power supply • blown fuse • undervoltage in mains.
7	AI1 LOSS	Analogue input 1 loss. Analogue input value is less than AI1 FAULT LIMIT (3021). Check for and correct: • source and connection for analogue input • parameter settings for AI1 FAULT LIMIT (3021) and 3001 AI<MIN FUNCTION.

Fault code	Fault name in the panel	Description and recommended corrective action
8	AI2 LOSS	Analogue input 2 loss. Analogue input value is less than AI2 FAULT LIMIT (3022). Check for and correct: • source and connection for analogue input • parameter settings for AI2 FAULT LIMIT (3022) and 3001 AI<MIN FUNCTION.
9	MOT OVERTEMP	Motor is too hot, as estimated by the drive. • Check for overloaded motor. • Adjust the parameters used for the estimate (3005…3009). • Check the temperature sensors and *Group 35: MOTOR TEMP MEAS* parameters.
10	PANEL LOSS	Panel communication is lost and either: • the drive is in local control mode (the control panel displays HAND), or • the drive is in remote control mode (AUTO) and is parameterized to accept start/stop, direction or reference from the control panel. To correct, check: • communication lines and connections • parameter 3002 PANEL COMM ERR • parameters in *Group 10: START/STOP/DIR* and *Group 11: REFERENCE SELECT* (if drive operation is AUTO).
11	ID RUN FAIL	The motor ID run was not completed successfully. Check for and correct: • motor connections.
12	MOTOR STALL	Motor or process stall. Motor is operating in the stall region. Check for and correct: • excessive load • insufficient motor power • parameters 3010…3012.
13	RESERVED	Not used.

Fault code	Fault name in the panel	Description and recommended corrective action
14	EXT FAULT 1	Digital input defined to report the first external fault is active. See parameter 3003 EXTERNAL FAULT 1.
15	EXT FAULT 2	Digital input defined to report the second external fault is active. See parameter 3004 EXTERNAL FAULT 2.
16	EARTH FAULT	The load on the input power system is out of balance. • Check for/correct faults in the motor or motor cable. • Verify that motor cable does not exceed max. specified length.
17	OBSOLETE	Not used.
18	THERM FAIL	Internal fault. The thermistor measuring the internal temperature of the drive is open or shorted. Contact your local ABB representative (see page *424*).
19	OPEX LINK	Internal fault. A communication-related problem has been detected between the control and main circuit boards. Contact your local ABB representative (see page *424*).
20	OPEX PWR	Internal fault. Low voltage condition detected on the main circuit board. Contact your local ABB representative (see page *424*).
21	CURR MEAS	Internal fault. Current measurement is out of range. Contact your local ABB representative (see page *424*).
22	SUPPLY PHASE	Ripple voltage in the DC link is too high. Check for and correct: • missing mains phase • blown fuse.
23	RESERVED	Not used.

Fault code	Fault name in the panel	Description and recommended corrective action
24	OVERSPEED	Motor speed is greater than 120% of the larger (in magnitude) of 2001 MINIMUM SPEED or 2002 MAXIMUM SPEED. Check for and correct: • parameter settings for 2001 and 2002 • adequacy of motor braking torque • applicability of torque control • brake chopper and resistor.
25	RESERVED	Not used.
26	DRIVE ID	Internal fault. Configuration block drive ID is not valid. Contact your local ABB representative (see page *424*).
27	CONFIG FILE	Internal configuration file has an error. Contact your local ABB representative (see page *424*).
28	SERIAL 1 ERR	Fieldbus communication has timed out. Check for and correct: • fault setup (3018 COMM FAULT FUNC and 3019 COMM FAULT TIME) • communication settings (*Group 51: EXT COMM MODULE* or *Group 53: EFB PROTOCOL* as appropriate) • poor connections and/or noise on line.
29	EFB CON FILE	Error in reading the configuration file for the fieldbus adapter.
30	FORCE TRIP	Fault trip forced by the fieldbus. See the fieldbus user's manual.
31	EFB 1	Fault code reserved for the EFB protocol application. The meaning is protocol dependent.
32	EFB 2	
33	EFB 3	

Fault code	Fault name in the panel	Description and recommended corrective action
34	MOTOR PHASE	Fault in the motor circuit. One of the motor phases is lost. Check for and correct: • motor fault • motor cable fault • thermal relay fault (if used) • internal fault.
35	OUTP WIRING	Error in power wiring suspected. Check for and correct: • input power wired to drive output • ground faults.
36	INCOMPATIBLE SW	Loaded software is not compatible with the current drive type. Contact your local ABB representative (see page *11*).
37	CB OVERTEMP	Drive control board is overheated. The fault trip limit is 88 °C. Check for and correct: • excessive ambient temperature • fan failure • obstructions in the air flow. Not for drives with an OMIO control board.
38	USER LOAD CURVE	Condition defined by parameter 3701 USER LOAD C MODE has been valid longer than the time defined by 3703 USER LOAD C TIME.
101 … 199	SYSTEM ERROR	Error internal to the drive. Contact your local ABB representative and report the error number (see page *11*).
201 … 299	SYSTEM ERROR	Error in the system. Contact your local ABB representative and report the error number (see page *11*).

Fault code	Fault name in the panel	Description and recommended corrective action
1000	PAR HZRPM	Parameter values are inconsistent. Check for any of the following: • 2001 MINIMUM SPEED > 2002 MAXIMUM SPEED • 2007 MINIMUM FREQ > 2008 MAXIMUM FREQ • 2001 MINIMUM SPEED / 9908 MOTOR NOM SPEED is outside the range -128…128 • 2002 MAXIMUM SPEED / 9908 MOTOR NOM SPEED is outside the range -128…128 • 2007 MINIMUM FREQ / 9907 MOTOR NOM FREQ is outside the range -128…128 • 2008 MAXIMUM FREQ / 9907 MOTOR NOM FREQ is outside the range -128…128.
1001	PAR PFA REF NEG	Parameter values are inconsistent. Check for the following: • 2007 MINIMUM FREQ is negative, when 8123 PFA ENABLE is active.
1002	RESERVED	Not used.
1003	PAR AI SCALE	Parameter values are inconsistent. Check for any of the following: • 1301 MINIMUM AI1 > 1302 MAXIMUM AI1 • 1304 MINIMUM AI2 > 1305 MAXIMUM AI2.
1004	PAR AO SCALE	Parameter values are inconsistent. Check for any of the following: • 1504 MINIMUM AO1 > 1505 MAXIMUM AO1 • 1510 MINIMUM AO2 > 1511 MAXIMUM AO2.
1005	PAR PCU 2	Parameter values for power control are inconsistent: Improper motor nominal kVA or motor nominal power. Check for the following: • 1.1 ≤ (9906 MOTOR NOM CURR · 9905 MOTOR NOM VOLT · 1.73 / P_N) ≤ 2.6, where: P_N = 1000 · 9909 MOTOR NOM POWER (if units are kW) or P_N = 746 · 9909 MOTOR NOM POWER (if units are hp, e.g. in US).

Fault code	Fault name in the panel	Description and recommended corrective action
1006	PAR EXT RO	Parameter values are inconsistent. Check for the following: • extension relay module not connected and • 1410…1412 RELAY OUTPUTS 4…6 have non-zero values.
1007	PAR FIELDBUS MISSING	Parameter values are inconsistent. Check for and correct the following: • A parameter is set for fieldbus control (e.g. 1001 EXT1 COMMANDS = 10 (COMM)), but 9802 COMM PROT SEL = 0.
1008	PAR PFA MODE	Parameter values are inconsistent – 9904 MOTOR CTRL MODE must be = 3 (SCALAR:FREQ) when 8123 PFA ENABLE is activated.
1009	PAR PCU 1	Parameter values for power control are inconsistent: Improper motor nominal frequency or speed. Check for both of the following: • 1 ≤ (60 · 9907 MOTOR NOM FREQ / 9908 MOTOR NOM SPEED) ≤ 16 • 0.8 ≤ 9908 MOTOR NOM SPEED / (120 · 9907 MOTOR NOM FREQ / Motor poles) ≤ 0.992.
1010	PAR PFA & OVERRIDE	Override mode is enabled and PFA is activated at the same time. This cannot be done because PFA interlocks cannot be observed in the override mode.
1011	PAR OVERRIDE	Parameter values are inconsistent. All override mode parameters do not have correct values when override mode is enabled (parameter 1705 OVERRIDE ENABLE). Check for any of the following: • parameter 1701 OVERRIDE SEL, override activation signal • parameter 1702 OVERRIDE FREQ and 1703 OVERRIDE SPEED both zero.

Fault code	Fault name in the panel	Description and recommended corrective action
1012	PAR PFA IO 1	IO configuration is not complete – not enough relays are parameterized for PFA. Or, a conflict exists between group 14, parameter 8117 NR OF AUX MOT and parameter 8118 AUTOCHNG INTERV.
1013	PAR PFA IO 2	IO configuration is not complete – the actual number of PFA motors (parameter 8127 MOTORS) does not match the PFA motors in group 14 and parameter 8118 AUTOCHNG INTERV.
1014	PAR PFA IO 3	IO configuration is not complete – the drive is unable to allocate a digital input (interlock) for each PFA motor (parameters 8120 INTERLOCKS and 8127 MOTORS).
1015	RESERVED	Not used.
1016	PAR USER LOAD C	Parameter values for the user load curve are inconsistent. Check that the following conditions are met: • 3704 LOAD FREQ 1 ≤ 3707 LOAD FREQ 2 ≤ 3710 LOAD FREQ 3 ≤ 3713 LOAD FREQ 4 ≤ 3716 LOAD FREQ 5. • 3705 LOAD TORQ LOW 1 ≤ 3706 LOAD TORQ HIGH 1. • 3708 LOAD TORQ LOW 2 ≤ 3709 LOAD TORQ HIGH 2. • 3711 LOAD TORQ LOW 3 ≤ 3712 LOAD TORQ HIGH 3. • 3714 LOAD TORQ LOW 4 ≤ 3715 LOAD TORQ HIGH 4. • 3717 LOAD TORQ LOW 5 ≤ 3718 LOAD TORQ HIGH 5.
-	UNKNOWN DRIVE TYPE: ACH550 SUPPORTED DRIVES: X	Wrong type of panel, i.e. panel that supports drive X but not the ACH550, has been connected to the ACH550.

Fault resetting

The ACH550 can be configured to automatically reset certain faults. Refer to parameter *Group 31: AUTOMATIC RESET*.

WARNING! If an external source, e.g. AUTO key, is selected for start command and it is active, the ACH550 may start immediately after fault reset.

Flashing red LED

To reset the drive for faults indicated by a flashing red LED:

- Turn off the power for 5 minutes.

Red LED

To reset the drive for faults indicated by a red LED (on, not flashing), correct the problem and do one of the following:

- From the control panel: press RESET.
- Turn the power off for 5 minutes.

Depending on the value of 1604 FAULT RESET SEL the following could also be used to reset the drive:

- digital input
- serial communication.

When the fault has been corrected, the motor can be started.

History

For reference, the last three fault codes are stored into parameters 0401, 0412 and 0413. For the most recent fault (identified by parameter 0401), the drive stores additional data (in parameters 0402…0411) to aid in troubleshooting a problem. For example, parameter 0404 stores the motor speed at the time of the fault.

To clear the fault history (all of *Group 04: FAULT HISTORY* parameters), follow these steps:

1. In the control panel, Parameters mode, select parameter 0401.
2. Press EDIT.
3. Press the UP and DOWN keys simultaneously.
4. Press SAVE.

Correcting alarms

The recommended corrective action for alarms is:

- Determine if the alarm requires any corrective action (action is not always required).
- Use *Alarm listing* below to find and address the root cause of the problem.

Alarm listing

The following table lists the alarms by code number and describes each.

Alarm code	Display	Description
2001	OVERCURRENT	The current limiting controller is active. Check for and correct: • excessive motor load • insufficient acceleration time (parameters 2202 ACCELER TIME 1 and 2205 ACCELER TIME 2) • faulty motor, motor cables or connections.
2002	OVERVOLTAGE	The overvoltage controller is active. Check for and correct: • static or transient overvoltages in the input power supply • insufficient deceleration time (parameters 2203 DECELER TIME 1 and 2206 DECELER TIME 2).

Alarm code	Display	Description
2003	UNDERVOLTAGE	The undervoltage controller is active. Check for and correct: • undervoltage on mains.
2004	DIR LOCK	The change in direction being attempted is not allowed. Either: • do not attempt to change the direction of motor rotation, or • change parameter 1003 DIRECTION to allow direction change (if reverse operation is safe).
2005	IO COMM	Fieldbus communication has timed out. Check for and correct: • fault setup (3018 COMM FAULT FUNC and 3019 COMM FAULT TIME) • communication settings (*Group 51: EXT COMM MODULE* or *Group 53: EFB PROTOCOL* as appropriate) • poor connections and/or noise on line.
2006	AI1 LOSS	Analogue input 1 is lost, or value is less than the minimum setting. Check: • input source and connections • parameter that sets the minimum (3021) • parameter that sets the alarm/fault operation (3001).
2007	AI2 LOSS	Analogue input 2 is lost, or value is less than the minimum setting. Check: • input source and connections • parameter that sets the minimum (3022) • parameter that sets the alarm/fault operation (3001).

Alarm code	Display	Description
2008	PANEL LOSS	Panel communication is lost and either: • the drive is in local control mode (the control panel displays HAND), or • the drive is in remote control mode (AUTO) and parameterized to accept start/stop, direction or reference from the control panel. To correct check: • communication lines and connections • parameter 3002 PANEL COMM ERR • parameters in *Group 10: START/STOP/DIR* and *Group 11: REFERENCE SELECT* (if drive operation is AUTO).
2009	DEVICE OVERTEMP	Drive heatsink is hot. This alarm warns that a DEV OVERTEMP fault may be near. R1…R4: 100 °C (212 °F) R5/R6: 110 °C (230 °F) Check for and correct: • fan failure • obstructions in the air flow • dirt or dust coating on the heat sink • excessive ambient temperature • excessive motor load.
2010	MOTOR TEMP	Motor is hot, based on either the drive's estimate or on temperature feedback. This alarm warns that a MOT OVERTEMP fault trip may be near. • Check for overloaded motor. • Adjust the parameters used for the estimate (3005…3009). • Check the temperature sensors and *Group 35: MOTOR TEMP MEAS* parameters.
2011	RESERVED	Not used.
2012	MOTOR STALL	Motor is operating in the stall region. This alarm warns that a MOTOR STALL fault trip may be near.
2013 (note 1)	AUTORESET	This alarm warns that the drive is about to perform an automatic fault reset, which may start the motor. • To control automatic reset, use *Group 31: AUTOMATIC RESET*.

Alarm code	Display	Description
2014 See Note 1	AUTOCHANGE	This alarm warns that the PFA autochange function is active. • To control PFA, use *Group 81: PFA CONTROL* and see also the Pump alternation macro on page *100*.
2015	PFA I LOCK	This alarm warns that the PFA interlocks are active, which means that the drive cannot start: • any motor (when Autochange is used), • the speed regulated motor (when Autochange is not used).
2016	RESERVED	Not used.
2017 See Note 1	OFF BUTTON	This alarm warns that the OFF key has been pressed on the control panel when the local control lock is active. • Disable the local control mode with parameter 1606 LOCAL LOCK and retry.
2018 See Note 1	PID SLEEP	This alarm warns that the PID sleep function is active, which means that the motor could accelerate when the PID sleep function ends. • To control PID sleep, use parameters 4022…4026 or 4122…4126.
2019	ID RUN	Performing ID run.
2020	OVERRIDE	Override mode activated.
2021	START ENABLE 1 MISSING	This alarm warns that the Start enable 1 signal is missing. • To control Start enable 1 function, use parameter 1608. To correct, check: • digital input configuration • communication settings.
2022	START ENABLE 2 MISSING	This alarm warns that the Start enable 2 signal is missing. • To control Start enable 2 function, use parameter 1609. To correct, check: • digital input configuration • communication settings.
2023	EMERGENCY STOP	Emergency stop activated.

Alarm code	Display	Description
2024	RESERVED	Not used.
2025	FIRST START	Signals that the drive is performing a First Start evaluation of motor characteristics. This is normal the first time the motor is run after motor parameters are entered or changed. See parameter 9910 ID RUN for a description of motor models.
2026	INPUT PHASE LOSS	The intermediate DC circuit DC voltage is oscillating due to missing input power line phase or blown fuse. The alarm is generated when the DC voltage ripple exceeds 14% of the nominal DC voltage. • Check input power line fuses • Check for input power supply imbalance.
2027	USER LOAD CURVE	This alarm warns that the condition defined by parameter 3701 USER LOAD C MODE has been valid longer than half of the time defined by 3703 USER LOAD C TIME.
2028	START DELAY	Shown during the Start delay. See parameter 2113 START DELAY.

Note 1. Even when the relay output is configured to indicate alarm conditions (e.g. parameter 1401 RELAY OUTPUT 1 = 5 (ALARM) or 16 (FLT/ALARM), this alarm is not indicated by a relay output.

Maintenance intervals

WARNING! Read the safety instructions on page *6* before performing any maintenance on the equipment. Ignoring the safety instructions can cause injury or death.

If installed in an appropriate environment, the drive requires very little maintenance. The table lists the routine maintenance intervals recommended by ABB.

Maintenance	Interval	Instruction
Heatsink temperature check and cleaning	Depends on the dustiness of the environment (6…12 months)	See *Heatsink* on page *369*.
Main cooling fan replacement	Every six years	See *Main fan replacement* on page *369*.
Internal enclosure cooling fan replacement (IP54 units)	Every three years	See *Internal enclosure fan replacement* on page *372*.
Capacitor reforming	Every year when stored	See *Reforming* on page *373*.
Capacitor replacement (frame sizes R5 and R6)	Every nine to twelve years, depending on the ambient temperature and duty cycle	See *Replacement* on page *373*.
HVAC control panel battery change.	Every ten years	See *Control panel* on page *374*.

Heatsink

The heatsink fins accumulate dust from the cooling air. Since a dusty sink is less efficient at cooling the drive, overtemperature faults become more likely. In a “normal” environment (not dusty, not clean), check the heatsink annually. In a dusty environment, check more often.

Check the heatsink as follows (when necessary):

1. Remove power from the drive.
2. Remove the cooling fan (see *Main fan replacement* on page *369*.
3. Blow clean compressed air (not humid) from bottom to top and simultaneously use a vacuum cleaner at the air outlet to trap the dust.

Note: If there a risk of the dust entering adjoining equipment, perform the cleaning in another room.

---

4. Reinstall the cooling fan.
5. Restore power.

Main fan replacement

The drive’s main cooling fan has a life span of about 60,000 operating hours at maximum rated operating temperature and drive load. The expected life span doubles for each 10 °C (18 °F) drop in the fan temperature (fan temperature is a function of ambient temperatures and drive loads).

Fan failure can be predicted by the increasing noise from fan bearings and the gradual rise in the heatsink temperature in spite of heatsink cleaning. If the drive is operated in a critical part of a process, fan replacement is recommended once these symptoms start appearing. Replacement fans are available from ABB (see page *424*). Do not use other than ABB specified spare parts.

Main fan replacement (frame sizes R1…R4)

To replace the fan:

1. Remove power from the drive.
2. Remove the drive cover.
3. For frame sizes:
   - R1 and R2: Press together the retaining clips on the fan cover and lift.
   - R3 and R4: Press the lever located on the left side of the fan mount and rotate the fan up and out.
4. Disconnect the fan cable.
5. Install the fan in reverse order.
6. Restore power.

Arrows in the fan show the directions of the rotation and air flow.

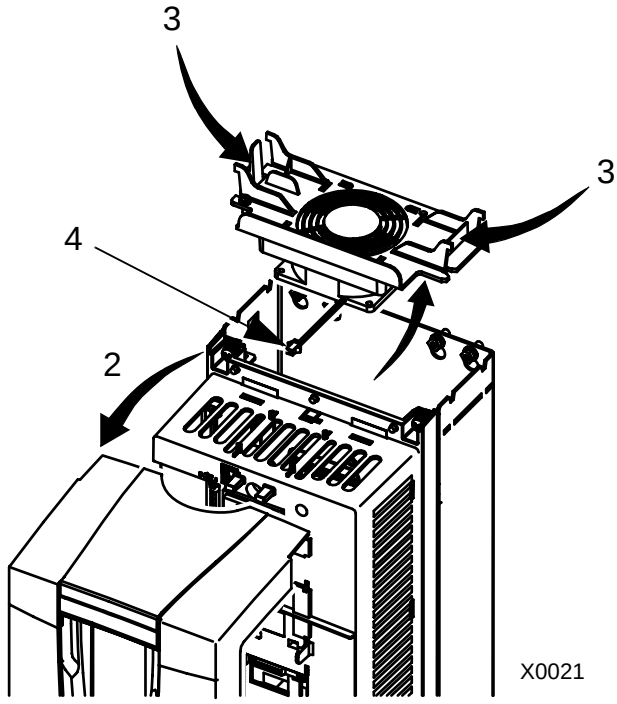

Main fan replacement (frame sizes R5 and R6)

To replace the fan:

1. Remove power from the drive.
2. Remove the screws attaching the fan.
3. Disconnect the fan cable.
4. Install the fan in reverse order.
5. Restore power.

Arrows in the fan show the directions of the rotation and air flow.

Bottom view (R5)

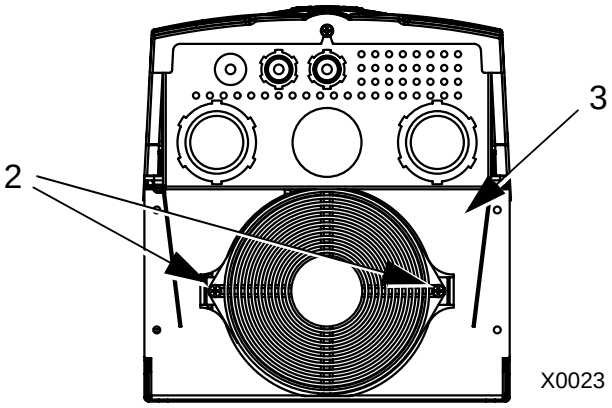

Bottom view (R6)

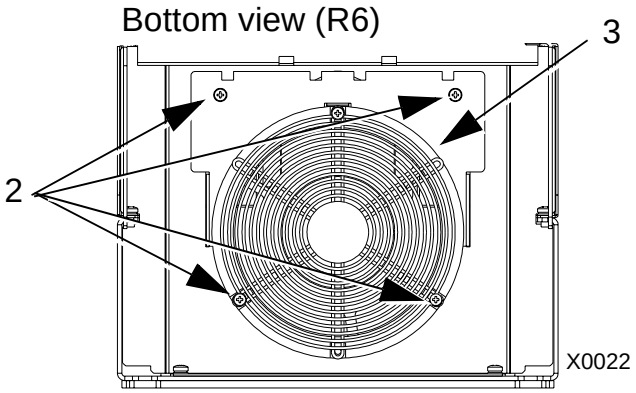

Internal enclosure fan replacement

IP54 / UL Type 12 enclosures have an additional internal fan to circulate air inside the enclosure.

Frame sizes R1…R4

To replace the internal enclosure fan in frame sizes R1 to R3 (located at the top of the drive) and R4 (located in front of the drive):

1. Remove power from the drive.
2. Remove the front cover.
3. The housing that holds the fan in place has barbed retaining clips at each corner. Press all four clips toward the centre to release the barbs.
4. When the clips/barbs are free, pull the housing up to remove from the drive.
5. Disconnect the fan cable.
6. Install the fan in reverse order, noting that:
   - the fan air flow is up (refer to the arrow on the fan)
   - the fan wire harness is toward the front
   - the notched housing barb is located in the right-rear corner
   - the fan cable connects just forward of the fan at the top of the drive.

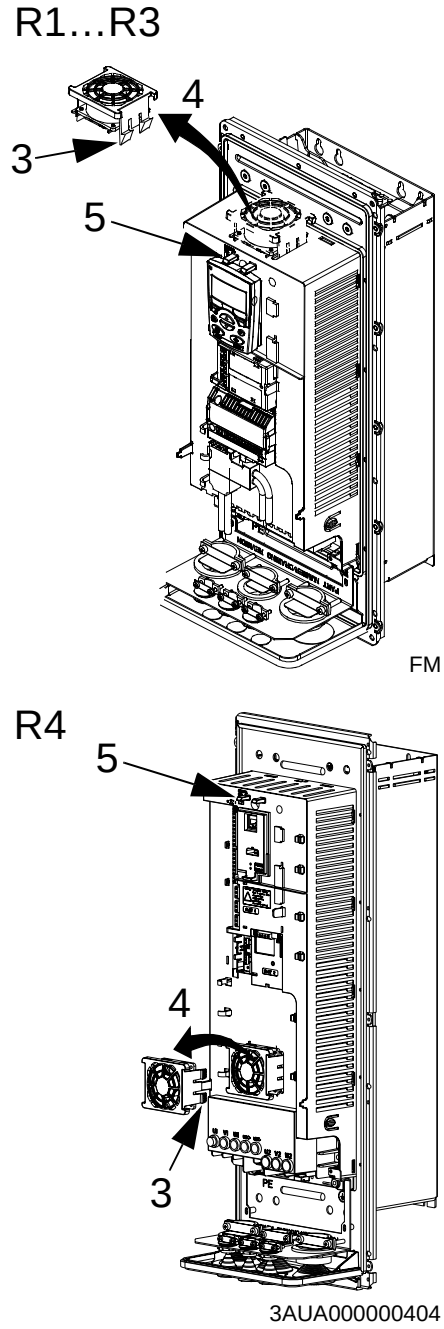

Frame sizes R5 and R6

To replace the internal enclosure fan in frame sizes R5 or R6:

1. Remove power from the drive.
2. Remove the front cover.
3. Lift the fan out and disconnect the cable.
4. Install the fan in reverse order.
5. Restore power.

Capacitors

Reforming

The drive DC link capacitors need to be reformed (re-aged) if the drive has been non-operational for more than one year. Without reforming capacitors may be damaged when the drive starts to operate. It is therefore recommended to reform the capacitors once a year. See page *16* for how to check the date of manufacture from the serial number shown on the drive labels.

For information on reforming the capacitors, refer to *Guide for Capacitor Reforming in ACS50, ACS55, ACS150, ACS350, ACS550 and ACH550* [3AFE68735190 (English)], available on the Internet (go to www.abb.com and enter the code in the Search field).

Replacement

The drive intermediate circuit employs several electrolytic capacitors. Capacitor life can be prolonged by lowering the ambient temperature.

It is not possible to predict a capacitor failure. Capacitor failure is usually followed by an input power fuse failure or a fault trip. Contact ABB if capacitor failure is suspected (see page *424*). Replacements for frame sizes R5 and R6 are available from ABB. Do not use other than ABB specified spare parts.

Control panel

Cleaning

Use a soft damp cloth to clean the control panel. Avoid harsh cleaners which could scratch the display window.

Battery

The battery keeps the clock operating in memory during power interruptions.

The expected life for the battery is greater than ten years. To remove the battery, use a coin to rotate the battery holder on the back of the control panel. Replace the battery with type CR2032.

Technical data

What this chapter contains

This chapter contains the following information:

- ratings (page 375)
- input power cable, fuses and circuit breakers (page 381)
- cable terminals (page 388)
- input power (mains) connection (page 388)
- motor connection (page 389)
- control connections (page 393)
- hardware description (page 394)
- efficiency (page 397)
- cooling (page 397)
- dimensions and weights (page 399)
- ambient conditions (page 416)
- materials (page 417)
- applicable standards (page 418)
- provisions for fulfilling the requirements for CE, C-Tick and UL marks (page 418)
- warranty (page 422)
- product protection in the USA (page 423)
- contact information (page 424).

Ratings

By type code, the tables below provide ratings for the ACH550 adjustable speed AC drive, including:

- IEC ratings in 40 °C for 400 V and 200 V drives. See the table on page 379 for available currents in other temperatures for 400 V drives.
- frame size

Abbreviated column headers are described in section *Symbols* on page 378.

IEC ratings, 380…480 V drives

Type code	Valid up to 40 °C			Frame size
ACH550-01-	I_{2N} A	P_N kW	Max. current I_{MAX}	
Three-phase supply voltage, 380…480 V				
02A4-4	2.4	0.75	3.1	R1
03A3-4	3.3	1.1	4.3	R1
04A1-4	4.1	1.5	5.9	R1
05A4-4	5.4	2.2	7.4	R1
06A9-4	6.9	3.0	9.7	R1
08A8-4	8.8	4.0	12.4	R1
012A-4	11.9	5.5	15.8	R1
015A-4	15.4	7.5	21.4	R2
023A-4	23	11	27.7	R2
031A-4	31	15	41	R3
038A-4	38	18.5	56	R3
045A-4	45	22	68	R3
044A-4	44	22	68	R4
059A-4	59	30	79	R4
072A-4	72	37	106	R4
087A-4	87	45	139	R4
096A-4	96	45	139	R5
125A-4	125	55	173	R5
124A-4	124	55	173	R6
157A-4	157	75	223	R6
180A-4	180	90	281	R6
195A-A	205	110	292	R6
246A-4	245	132	346	R6

00467918.xls B

I_{MAX}: Maximum output current allowed for 2 seconds every minute

IEC ratings, 208…240 V drives

Type code	Valid up to 40 °C			Frame size
ACH550-01-	I_{2N} A	P_N kW	Max. current I_{MAX} A	
Three-phase supply voltage, 208…240 V				
04A6-2	4.6	0.75	6.3	R1
06A6-2	6.6	1.1	8.3	R1
07A5-2	7.5	1.5	11.9	R1
012A-2	11.8	2.2	13.5	R1
017A-2	16.7	4.0	21.2	R1
024A-2	24.2	5.5	30.1	R2
031A-2	30.8	7.5	43.6	R2
046A-2	46	11	55	R3
059A-2	59	15	83	R3
075A-2	75	18.5	107	R4
088A-2	88	22	135	R4
114A-2	114	30	158	R4
143A-2	143	37	205	R6
178A-2	178	45	270	R6
221A-2	221	55	320	R6
248A-2	248	75	346	R6

00467918.xls B

I_{MAX}: Maximum output current allowed for 2 seconds every minute

Symbols

Typical ratings:

Nominal rating (10% overload capability)

I_{2N} continuous rms current. 10% overload is allowed for one minute every ten minutes through the whole speed range.

P_N typical motor power. The kilowatt power ratings apply to most IEC, 4-pole motors. The horsepower ratings apply to most 4-pole NEMA motors.

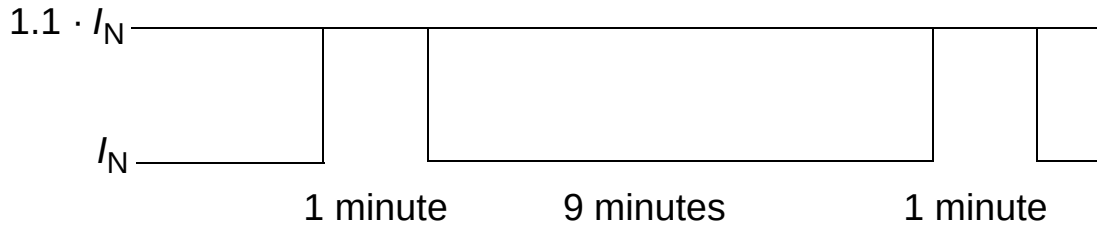

Sizing

The current ratings are the same regardless of the supply voltage within one voltage range. To achieve the rated motor power given in the table, the rated current of the drive must be higher than or equal to the rated motor current.

400 V drives

400 V drives (IP21 and IP54) can deliver following currents continuously (24 hours a day, 7 days a week and 365 days a year) in different ambient temperatures. These currents are available up to 1000 m (3300 ft).

Type code	Frame size	P_{40}	I_{35}	I_{40}	I_{45}	I_{50}	M2000
ACH550-01-		**kW**	**A**	**A**	**A**	**A**	**A**
02A4-4	R1	0.75	2.5	2.4	2.3	2.2	1.93
03A3-4	R1	1.1	3.4	3.3	3.1	3.0	2.65
04A1-4	R1	1.5	4.2	4.1	3.9	3.7	3.50
05A4-4	R1	2.2	5.5	5.4	5.1	4.9	4.85
06A9-4	R1	3	7.0	6.9	6.6	6.3	6.30
08A8-4	R1	4	9.0	8.8	8.6	8.3	8.29
012A-4	R1	5.5	12.1	11.9	11.4	10.9	10.90
015A-4	R2	7.5	15.7	15.4	14.9	14.4	14.40
023A-4	R2	11	23.5	23	22.0	20.9	20.87
031A-4	R3	15	32	31	29.5	28.0	27.97
038A-4	R3	18.5	39	38	36.1	34.2	34.12
045A-4	R3	22	46	45	43	41	39.44
059A-4	R4	30	60	59	56	53	53
072A-4	R4	37	73	72	69.5	67	67
087A-4	R4	45	89	87	83.5	80	80
125A-4	R5	55	128	125	119	113	98
157A-4	R6	75	160	157	149	141	138
180A-4	R6	90	184	180	171	162	162
195A-4	R6	110	208	205	195	185	203
246A-4	R6	132	250	246	234	221	239

00467918.xls B

P_{40}: Typical motor power at 40 °C
I_{xx}: Drive output current at xx °C
M2000: ABB M2 motor nominal current (Catalogue BU/General purpose motors EN 12-2005)

200 V drives

For 200 V drives, in the temperature range +40 °C…50 °C (+104 °F…122 °F), the rated output current is decreased by 1% for every 1 °C (1.8 °F) above 40 °C (+104 °F). The output current is calculated by multiplying the current given in the rating table by the derating factor.

Example: If the ambient temperature is 50 °C (+122 °F), the derating factor is 100% - 1%/°C = 90% or 0.90.

The output current is then 0.90 · I_{2N}.

Altitude derating

In altitudes from 1000…2000 m (3300…6600 ft) above sea level, the derating is 1% for every 100 m (330 ft). If the installation site is higher than 2000 m (6600 ft) above sea level, please contact your local ABB representative for further information (see page *424*).

Single phase supply derating

For 208…240 V series drives, a single phase supply can be used. In that case, the derating is 50%.

Switching frequency derating

The switching frequency control (see parameter 2607 on page *228*) can decrease the switching frequency instead of the current when the drive reaches the internal temperature limit. This function is on by default.

For worst case sizing, the maximum derating values are as follows:

If the 8 kHz switching frequency is used, limit P_N and I_{2N} to 80%.

If the 12 kHz switching frequency is used, limit P_N and I_{2N} to 65%.

Input power (mains) cable, fuses and circuit breakers

A four conductor cable (three phases and ground/protective earth) is recommended for the input power cabling. Shielding is not necessary. Dimension the cables and fuses in accordance with the input current. Always pay attention to local codes when sizing the cables and fuses.

The input power connectors are at the bottom of the drive. Input power cable routing must be done so that the distance from the sides of the drive is at least 20 cm (8 in) to avoid excessive radiation to the input power cable. In the case of shielded cable, twist the cable screen wires together into a bundle not longer than five times its width and connect to the PE terminal of the drive (or PE terminal of input filter, if present).

Line current harmonics

Standard ACH550 drive without any additional options meets IEC/EN 61000-3-12 limits for harmonic currents. The standard can be met with a transformer short circuit ratio of 120 or higher. The harmonic levels under rated load conditions are available on request.

Fuses

Branch circuit protection must be provided by the end-user, sized in accordance with the NEC and local codes. Recommendations for fuses for short-circuit protection on the mains cable are in the following tables.

Fuses, 380…480 V drives

ACH550-01-	Input current A	Mains fuses		
		IEC269 gG A	UL class T A	Bussmann type[1]
02A4-4	2.4	10	10	JJS-10
03A3-4	3.3			
04A1-4	4.1			
05A4-4	5.4			
06A9-4	6.9			
08A8-4	8.8		15	JJS-15
012A-4	11.9	16		
015A-4	15.4		20	JJS-20
023A-4	23	25	30	JJS-30
031A-4	31	35	40	JJS-40
038A-4	38	50	50	JJS-50
044A-4	44		60	JJS-60
045A-4	45			
059A-4	59	63	80	JJS-80
072A-4	72	80	90	JJS-90
087A-4	87	125	125	JJS-125
096A-4	96			
124A-4	124	160	175	JJS-175
125A-4	125			
157A-4	157	200	200	JJS-200
180A-4	180	250	250	JJS-250
195A-4	205			
246A-4	245	315	350	JJS-350

00467918.xls B

[1] Example

Fuses, 208…240 V drives

ACH550-01-	Input current A	Mains fuses		
		IEC269 gG A	UL class T A	Bussmann type[1]
04A6-2	4.6	10	10	JJS-10
06A6-2	6.6			
07A5-2	7.5			
012A-2	11.8	16	15	JJS-15
017A-2	16.7	25	25	JJS-25
024A-2	24.2		30	JJS-30
031A-2	30.8	40	40	JJS-40
046A-2	46.2	63	60	JJS-60
059A-2	59.4		80	JJS-80
075A-2	74.8	80	100	JJS-100
088A-2	88.0	100	110	JJS-110
114A-2	114	125	150	JJS-150
143A-2	143	200	200	JJS-200
178A-2	178	250	250	JJS-250
221A-2	221	315	300	JJS-300
248A-2	248		350	JJS-350

00467918.xls B

[1] Example

Note: The use of ultra rapid fuses is recommended, but normal HRC fuses, ABB Tmax moulded case circuit breakers (MCCB) or ABB S200 B/C miniature circuit breakers (MCB) are sufficient. See section *Circuit breakers* on page *384*.

Circuit breakers

The tables below list ABB circuit breakers that can be used instead of fuses (recommended). Depending on the type code, Tmax moulded case circuit breakers (MCCB) or S200 B/C miniature circuit breakers (MCB) / manual motor starters, or both are given.

ABB S200 B/C miniature circuit breakers (MCB) and manual motor starters

Type code	Frame size	Input current	Rated current	ABB miniature circuit breakers and manual motor starters				
				Prospective short circuit current				
				S200M B/C	S200P B/C	S200 B/C	MS325	MS495
ACH550-01-		**A**	**A**	**kA**	**kA**	**kA**	**kA**	**kA**
03A3-4	R1	3.3	10	10	15	6	15	
04A1-4	R1	4.1	10	10	15	6	15	
05A4-4	R1	5.4	10	10	15	6	15	
06A9-4	R1	6.9	16	10	15	6	15	
08A8-4	R1	8.8	16	10	15	6	15	
012A-4	R1	11.9	16	10	15	6	15	
015A-4	R2	15.4	20	10	15	6	15	
023A-4	R2	23.0	32	10	15	6		
031A-4	R3	31.0	40	10	15	6		10
038A-4	R3	38.0	50	10	15	6		10
045A-4	R3	45.0	63	10	15	6		10

00577998.xls A

ABB Tmax moulded case circuit breakers (MCCB)

Type code	Frame size	Input current	ABB Tmax moulded case circuit breaker			
			Tmax frame	Tmax rating	Electronic release	Prospective short circuit current
ACH550-01-		**A**		**A**	**A**	**kA**
038A-4	R3	38.0	T2	160	63	50
045A-4	R3	45.0	T2	160	63	50
059A-4	R4	59.0	T2	160	100	50
072A-4	R4	72.0	T2	160	100	50
087A-4	R4	87.0	T2	160	160	50
125A-4	R5	125.0	T2	160	160	65
157A-4	R6	157.0	T4	250	250	65
180A-4	R6	180.0	T4	250	250	65
195A-4	R6	195.0	T4	250	250	65

00577998.xls A

Input power (mains) cable

The following table gives copper and aluminium cable types for different load currents. These recommendations apply only for the conditions listed at the top of the table.

Dimension the cables according to local safety regulations, appropriate input voltage and the load current of the drive. In any case, the cable must be less than the maximum limit defined by the terminal size (see section *Cable terminals* on page *388*).

IEC				NEC	
Based on: • EN 60204-1 and IEC 60364-5-2/2001 • PVC insulation • 30 °C (86 °F) ambient temperature • 70 °C (158 °F) surface temperature • cables with concentric copper shield • not more than nine cables laid on cable ladder side by side.				Based on: • NEC Table 310-16 for copper wires • 90 °C (194 °F) wire insulation • 40 °C (104 °F) ambient temperature • not more than three current-carrying conductors in raceway or cable, or earth (directly buried) • copper cables with concentric copper shield.	
Max load current A	**Cu cable mm^2**	**Max load current A**	**Al cable mm^2**	**Max load current A**	**Cu wire size AWG/kcmil**
14	3x1.5	61	3x25	22.8	14
20	3x2.5	75	3x35	27.3	12
27	3x4	91	3x50	36.4	10
34	3x6	117	3x70	50.1	8
47	3x10	143	3x95	68.3	6
62	3x16	165	3x120	86.5	4
79	3x25	191	3x150	100	3
98	3x35	218	3x185	118	2
119	3x50	257	3x240	137	1
153	3x70	274	3x (3x50)	155	1/0

IEC				NEC	
Based on: • EN 60204-1 and IEC 60364-5-2/2001 • PVC insulation • 30 °C (86 °F) ambient temperature • 70 °C (158 °F) surface temperature • cables with concentric copper shield • not more than nine cables laid on cable ladder side by side.				Based on: • NEC Table 310-16 for copper wires • 90 °C (194 °F) wire insulation • 40 °C (104 °F) ambient temperature • not more than three current-carrying conductors in raceway or cable, or earth (directly buried) • copper cables with concentric copper shield.	
Max load current A	**Cu cable mm^2**	**Max load current A**	**Al cable mm^2**	**Max load current A**	**Cu wire size AWG/kcmil**
186	3x95	285	2x (3x95)	178	2/0
215	3x120			205	3/0
249	3x150			237	4/0
284	3x185			264	250 MCM or 2 x 1
				291	300 MCM or 2 x 1/0
				319	350 MCM or 2 x 2/0

Note 1: Mains cable sizing is based on a correction factor of 0.71 (maximum of 4 cables laid on a cable ladder side by side, ambient temperature 30 °C (86 °F), EN 60204-1 and IEC 364-5-523). For other conditions, dimension the cables according to local safety regulations, appropriate input voltage and the load current of the drive. In any case, the cable must be between the minimum limit defined in this table and the maximum limit defined by the terminal size (see section *Cable terminals* on page *388*.)

Cable terminals

Mains and motor cable maximum sizes (per phase) as well as control cable maximum sizes accepted at the cable terminals, and the tightening torques are listed in the following table.

Frame size	U1, V1, W1 U2, V2, W2				Earthing PE				Control			
	Maximum wire size		Torque		Maximum wire size		Torque		Maximum wire size[1]		Torque	
	mm²	AWG	N·m	lb-ft	mm²	AWG	N·m	lb-ft	mm²	AWG	N·m	lb-ft
R1	6	8	1.4	1.0	4	10	1.4	1.0	1.5	16	0.4	0.3
R2	10	6	1.4	1.0	10	8	1.4	1.0				
R3	25	3	1.8	1.3	16	6	1.8	1.3				
R4	50	1/0	2.0	1.5	35	2	2.0	1.5				
R5	70	2/0	15	11.1	70	2/0	15	11.1				
R6	185	350 MCM	40	29.5	95	4/0	8	5.9				

[1] Values given for solid wires.
For stranded wires, the maximum size is 1 mm².

00467918.xls B

Input power (mains) connection

Input power (mains) connection specifications	
Voltage (U_1)	208/220/230/240 V AC 3-phase (or 1-phase) +10%…15% for 230 V AC units 400/415/440/460/480 V AC 3-phase +10%…15% for 400 V AC units
Prospective short-circuit current (IEC 629)	Maximum allowed prospective short-circuit current in the supply is 65 kA in a second providing that the mains cable of the drive is protected with appropriate fuses. US: 65,000 AIC
Frequency	48…63 Hz
Imbalance	Max. ±3% of nominal phase-to-phase input voltage
Fundamental power factor (cos phi$_1$)	0.98 (at nominal load)

Input power (mains) connection specifications	
Cable temperature rating	90 °C (194 °F) rating minimum

Motor connection

Motor connection specifications	
Voltage (U_2)	0…U_1, 3-phase symmetrical, U_{max} at the field weakening point
Frequency	0…500 Hz
Frequency resolution	0.01 Hz
Current	See section *Ratings* on page *375*.
Field weakening point	10…500 Hz
Switching frequency	Selectable: 1, 4, 8 or 12 kHz. See the availability according to the drive power in the table below.

Power (kW)	1 kHz	4 kHz	8 kHz	12 kHz
0.75…37	x	x	x	x
45…110	x	x	x	-
132	x	x	-	-

Cable temperature rating	90 °C (194 °F) rating minimum
Maximum motor cable length	See section *Motor cable length* below.

Motor cable length

The tables below show the maximum motor cable lengths for 400 V drives with different switching frequencies. Examples for using the table are also given.

Maximum cable lengths (m) for 400 V									
	EMC limits						Operational limits		
	IEC/EN 61800-3 Second environment (category C3[1])			IEC/EN 61800-3 First environment (category C2[1])			Basic unit		With du/dt filters
Frame size	1 kHz	4 kHz	8 kHz	1 kHz	4 kHz	8 kHz	1/4 kHz	8/12 kHz	
R1	300	300	300	300	300	300	100	100	150
R2	300	300	300	300	100	30	200	100	250
R3	300	300	300	300	75	75	200	100	250
R4	300	300	300	300	75	75	200	100	300
R5	100	100	100	100	100	100	300	150[2]	300
R6	100	100	[3]	100	100	[3]	300	150[2]	300

00577999.xls A

[1] See the new terms in section *IEC/EN 61800-3 (2004) Definitions* on page *420*.
[2] 12 kHz switching frequency is not available.
[3] Not tested.
Sine filters further extend the cable lengths.

Maximum cable lengths (ft) for 400 V									
	EMC limits						Operational limits		
	IEC/EN 61800-3 Second environment (category C3[1])			IEC/EN 61800-3 First environment (category C2[1])			Basic unit		With du/dt filters
Frame size	1 kHz	4 kHz	8 kHz	1 kHz	4 kHz	8 kHz	1/4 kHz	8/12 kHz	
R1	980	980	980	980	980	980	330	330	490
R2	980	980	980	980	330	98	660	330	820
R3	980	980	980	980	245	245	660	330	820
R4	980	980	980	980	245	245	660	330	980
R5	330	330	330	330	330	330	980	490[2]	980
R6	330	330	[3]	330	330	[3]	980	490[2]	980

00577999.xls A

[1] See the new terms in section *IEC/EN 61800-3 (2004) Definitions* on page *420*.
[2] 12 kHz switching frequency is not available.
[3] Not tested.
Sine filters further extend the cable lengths.

Under heading “Operational limits”, the “Basic unit” columns define the cable lengths with which the basic drive unit works without problems within the drive specification, without installing

any further options. Column “With du/dt filters” defines the cable lengths when an external du/dt filter is used.

The columns under heading “EMC limits” show the maximum cable lengths with which the units have been tested for EMC emissions. The factory guarantees that these cable lengths meet the EMC standard requirements.

If external sine filters are installed, longer cable lengths can be used. With sine filters the limiting factors are the voltage drop of the cable, which has to be taken into account in engineering, as well as the EMC limits (where applicable).

The default switching frequency is 4 kHz.

WARNING! Using a motor cable longer than specified in the table above may cause permanent damage to the drive.

Examples for using the table

Requirements	Checking and conclusions
R1 frame size, 8 kHz fsw, Category C2, 150 m cable	Check operational limits for R1 and 8 kHz -> for a 150 m cable a du/dt filter is needed. Check EMC limits -> EMC requirements for Category C2 are met with a 150 m cable.
R3 frame size, 4 kHz fsw, Category C3, 300 m cable	Check operational limits for R3 and 4 kHz -> a 300 m cable cannot be used even with a du/dt filter. A sine filter must be used and the voltage drop of the cable must be taken into account in the installation. Check EMC limits -> EMC requirements for Category C3 are met with a 300 m cable.
R5 frame size, 8 kHz fsw, Category C3, 150 m cable	Check operational limits for R5 and 8 kHz -> for a 150 m cable the basic unit is sufficient. Check EMC limits -> EMC requirements for Category C3 cannot be met with a 300 m cable. The installation configuration is not possible. An EMC plan is recommended to overcome the situation.
R6 frame size, 4 kHz fsw, EMC limits not applicable, 150 m cable	Check operational limits for R6 and 4 kHz -> for a 150 m cable the basic unit is sufficient. EMC limits do not need to be checked as there are no EMC requirements.

00577999.xls A

Motor thermal protection

According to regulations, the motor must be protected against thermal overload and the current must be switched off when overload is detected. The drive includes a motor thermal protection function that protects the motor and switches off the current when necessary. Depending on a drive parameter (see *Group 35: MOTOR TEMP MEAS*), the function either monitors a calculated temperature value (based on a motor thermal model) or an actual temperature indication given by motor temperature sensors. The user can tune the thermal model further by feeding in additional motor and load data.

The most common temperature sensors are:

- motor sizes IEC180…225: thermal switch (e.g. Klixon)
- motor sizes IEC200…250 and larger: PTC or PT100.

Control connections

Control connection specifications	
Analogue inputs and outputs	See section *Hardware description* on page *394*.
Digital inputs	See the footnote under the table in section *Hardware description* on page *394*.
Relays (digital outputs)	• Max. contact voltage: 30 V DC, 250 V AC • Max. contact current/power: 6 A, 30 V DC; 1500 VA, 250 V AC • Max. continuous current: 2 A rms (cos phi = 1), 1 A rms (cos phi = 0.4) • Minimum current: 10 mA, 12 V DC • Contact material: Silver-nickel (AgN) • Isolation between relay digital outputs, test voltage: 2.5 kV ms, 1 minute.
Terminal sizes	See section *Cable terminals* on page *388*.
Cable specifications	See section *Control cables* on page *32*.

Hardware description

	X1		Hardware description
Analogue I/O	1	SCR	Terminal for signal cable screen (connected internally to chassis ground).
	2	AI1	Analogue input channel 1, programmable. Default[2] = frequency reference. Resolution 0.1%, accuracy ±1%.
			Two different DIP switch types can be used.
			J1: AI1 OFF: 0…10 V (R_i = 312 kohm) 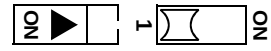
			J1: AI1 ON: 0…20 mA (R_i = 100 ohm) 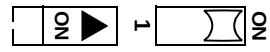
	3	AGND	Analogue input circuit common (connected internally to the chassis ground through 1 Mohm).
	4	+10 V	10 V/10 mA reference voltage output for analogue input potentiometer (1…10 kohm), accuracy ±2%.
	5	AI2	Analogue input channel 2, programmable. Default[2] = Actual signal 1 (PID1 feedback). Resolution 0.1%, accuracy ±1%.
			Two different DIP switch types can be used.
			J1: AI2 OFF: 0…10 V (R_i = 312 kohm) 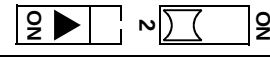
			J1: AI2 ON: 0…20 mA (R_i = 100 ohm) 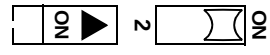
	6	AGND	Analogue input circuit common (connected internally to the chassis ground through 1 Mohm).
	7	AO1	Analogue output, programmable. Default[2] = frequency. 0…20 mA (load < 500 ohm). Accuracy ±3%.
	8	AO2	Analogue output, programmable. Default[2] = current. 0…20 mA (load < 500 ohm). Accuracy ±3%.
	9	AGND	Analogue output circuit common (connected internally to the chassis ground through 1 Mohm).

	X1		Hardware description
Digital inputs[1]	10	+24V	Auxiliary voltage output 24 V DC / 250 mA (reference to GND). Short circuit protected.
	11	GND	Auxiliary voltage output common (connected internally as floating).
	12	DCOM	Digital input common. To activate a digital input, there must be ≥+10 V (or ≤-10 V) between the input and DCOM. The 24 V may be provided by the ACH550 (X1:10) or by an external 12…24 V source of either polarity.
	13	DI1	Digital input 1, programmable. Default[2] = start/stop.
	14	DI2	Digital input 2, programmable. Default[2] = not used.
	15	DI3	Digital input 3, programmable. Default[2] = constant speed 1 (parameter 1202).
	16	DI4	Digital input 4, programmable. Default[2] = Start enable 1 (parameter 1608).
	17	DI5	Digital input 5, programmable. Default[2] = not used.
	18	DI6	Digital input 6, programmable. Default[2] = not used.
Relay outputs	19	RO1C	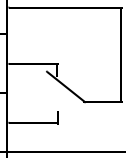 Relay output 1, programmable Default[2] = Ready Maximum: 250 V AC / 30 V DC, 2 A Minimum: 500 mW (12 V, 10 mA)
	20	RO1A	
	21	RO1B	
	22	RO2C	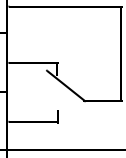 Relay output 2, programmable Default[2] = Running Maximum: 250 V AC / 30 V DC, 2 A Minimum: 500 mW (12 V, 10 mA)
	23	RO2A	
	24	RO2B	
	25	RO3C	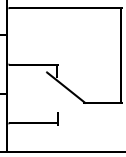 Relay output 3, programmable Default[2] = Fault (-1) Maximum: 250 V AC / 30 V DC, 2 A Minimum: 500 mW (12 V, 10 mA)
	26	RO3A	
	27	RO3B	

[1] Digital input impedance 1.5 kohm. Maximum voltage for digital inputs is 30 V.

[2] Default values depend on the macro used. Values specified are for the default macro. See chapter *Application macros and wiring*.

Note: Terminals 3, 6, and 9 are at the same potential.

Note: For safety reasons the fault relay signals a “fault” when the ACH550 is powered down.

The terminals on the control board as well as on the optional modules attachable to the board fulfil the Protective Extra Low Voltage (PELV) requirements stated in EN 50178, provided that the external circuits connected to the terminals also fulfil the requirements and the installation site is below 2000 m (6562 ft).

You can wire the digital input terminals in either a PNP or NPN configuration.

PNP connection (source)

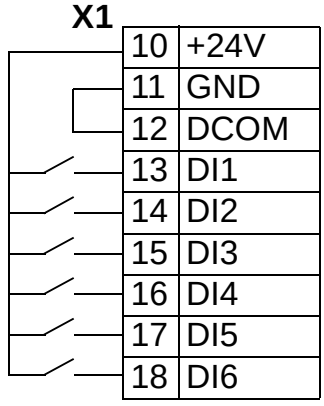

NPN connection (sink)

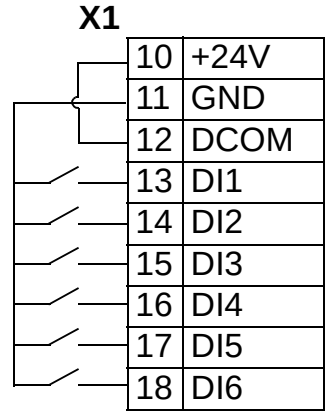

For using an external power supply, see the diagrams below.

PNP connection (source)

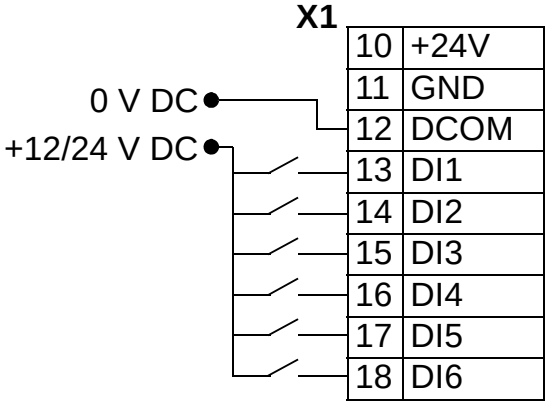

NPN connection (sink)

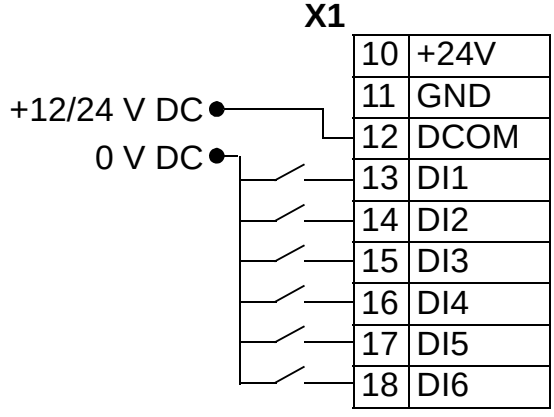

Communications

Terminals 28...32 are for RS485 communications. Use shielded cables.

X1	Identification	Hardware description
28	SCR Screen	For the connection diagram and additional information, see section *Embedded fieldbus (EFB)* on page *132*.
29	B + Positive	
30	A - Negative	
31	AGND	
32	SCR Screen	

Efficiency

Approximately 98% at nominal power level.

Cooling

Cooling specifications	
Method	Internal fan, flow direction from bottom to top
Free space around the unit	• 200 mm (8 in) above and below the unit • 0 mm (0 in) along each side of the unit

Air flow, 380…480 V drives

The following table lists heat loss and air flow data for 380…480 V drives at full load.

Drive		Heat loss		Air flow	
ACH550-01-	**Frame size**	**W**	**BTU/hr**	**m^3/h**	**ft^3/min**
02A4-4	R1	30	101	44	26
03A3-4	R1	40	137	44	26
04A1-4	R1	52	178	44	26
05A4-4	R1	73	249	44	26
06A9-4	R1	97	331	44	26
08A8-4	R1	127	434	44	26
012A-4	R1	172	587	44	26
015A-4	R2	232	792	88	52
023A-4	R2	337	1151	88	52
031A-4	R3	457	1561	134	79
038A-4	R3	562	1919	134	79
044A-4	R4	667	2278	280	165
045A-4	R3	667	2278	134	79
059A-4	R4	907	3098	280	165
072A-4	R4	1120	3825	280	165
087A-4	R4	1440	4918	280	165
096A-4	R5	1440	4918	250	147
124A-4	R6	1940	6625	405	238
125A-4	R5	1940	6625	350	205
157A-4	R6	2310	7889	405	238
180A-4	R6	2810	9597	405	238
195A-4	R6	3050	10416	405	238
246A-4	R6	3260	11133	405	238

00467918.xls B

Air flow, 208…240 V drives

The following table lists heat loss and air flow data for 208…240 V drives.

Drive		Heat loss		Air flow	
ACH550-01-	**Frame size**	**W**	**BTU/hr**	**m^3/h**	**ft^3/min**
04A6-2	R1	55	189	44	26
06A6-2	R1	73	249	44	26
07A5-2	R1	81	276	44	26
012A-2	R1	118	404	44	26
017A-2	R1	161	551	44	26
024A-2	R2	227	776	88	52
031A-2	R2	285	973	88	52
046A-2	R3	420	1434	134	79
059A-2	R3	536	1829	134	79
075A-2	R4	671	2290	280	165
088A-2	R4	786	2685	280	165
114A-2	R4	1014	3463	280	165
143A-2	R6	1268	4431	405	238
178A-2	R6	1575	5379	405	238
221A-2	R6	1952	6666	405	238
248A-2	R6	2189	7474	405	238

00467918.xls B

Dimensions and weights

The dimensions and mass for the ACH550 depend on the frame size and enclosure type. If unsure of frame size, find first the “Type” code on the drive labels. Then look up this type code in section *Ratings* on page *375* to determine the frame size.

Pages *404*…*415* show the dimensional drawings of the different frame sizes for each degree of protection. A complete set of dimensional drawings for ACH550 drives can be found on the *HVAC Info Guide* CD [3AFE68338743 (English)].

Mounting dimensions

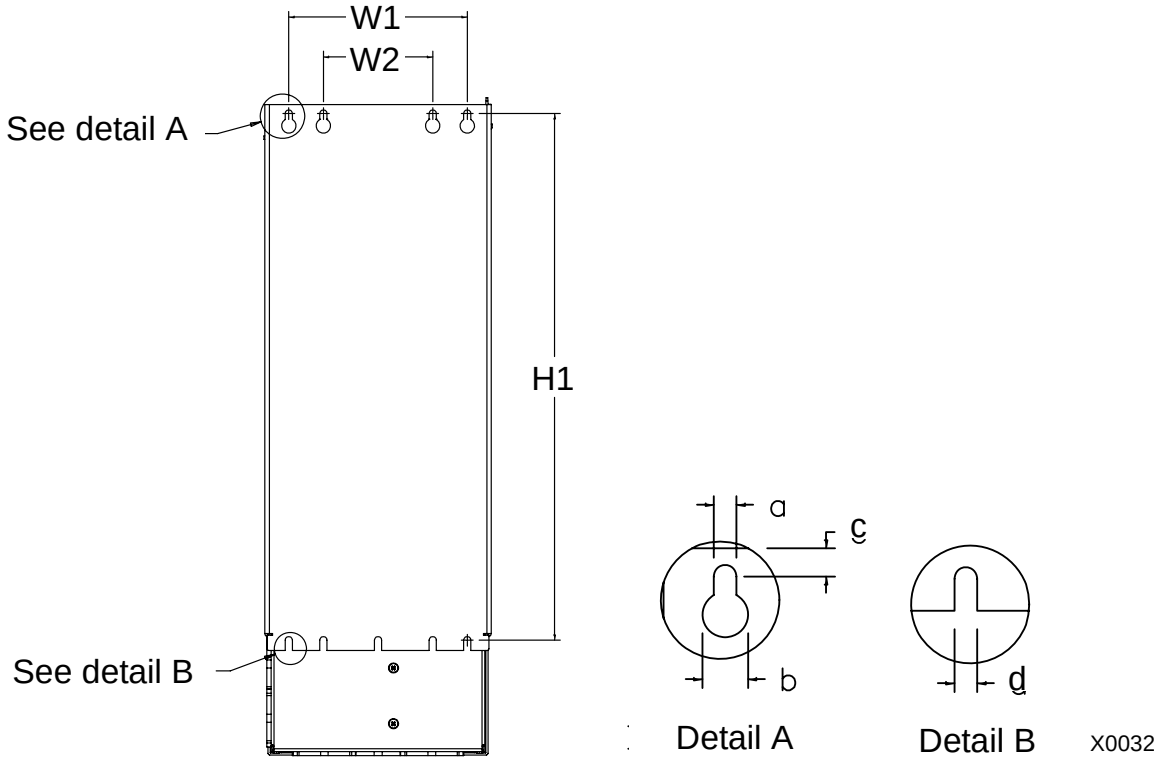

IP54 / UL Type 12 and IP21 / UL Type 1 – Dimensions for each frame size												
Ref.	**R1**		**R2**		**R3**		**R4**		**R5**		**R6**	
	mm	**in**	**mm**	**in**	**mm**	**in**	**mm**	**in**	**mm**	**in**	**mm**	**in**
W1*	98.0	3.9	98.0	3.9	160	6.3	160	6.3	238	9.4	263	10.4
W2*	--	--	--	--	98.0	3.9	98.0	3.9	--	--	--	--
H1*	318	12.5	418	16.4	473	18.6	578	22.8	588	23.2	675	26.6
a	5.5	0.2	5.5	0.2	6.5	0.25	6.5	0.25	6.5	0.25	9.0	0.35
b	10.0	0.4	10.0	0.4	13.0	0.5	13.0	0.5	14.0	0.55	14.0	0.55
c	5.5	0.2	5.5	0.2	8.0	0.3	8.0	0.3	8.5	0.3	8.5	0.3
d	5.5	0.2	5.5	0.2	6.5	0.25	6.5	0.25	6.5	0.25	9.0	0.35

* Centre-to-centre dimension

Weights and mounting screws

Frame size	Frame weight kg IP21/IP54	Frame weight lb IP21/IP54	Mounting screws Metric units	Mounting screws Imperial units
R1	6.5 / 8	14 / 18	M5	#10
R2	9.0 / 11	20 / 24	M5	#10
R3	16 / 17	35 / 38	M5	#10
R4	24 / 26	53 / 57	M5	#10
R5	34 / 42	75 / 93	M6	1/4 in
R6	69[1] / 86[2]	152[1] / 190[2]	M8	5/16 in

[1] ACH550-01-246A-4, IP21: 71 kg / 156 lb
[2] ACH550-01-246A-4, IP54: 88 kg / 194 lb

Control panel (operator keypad) dimensions and mounting

The control panel overall dimensions are shown in the table below.

	mm	in
Height	100	3.9
Width	70	2.8
Depth	20	0.8

IP54 panel mounting kit

Use the panel mounting kit (option) to mount the panel on a cabinet door to maintain the IP54 degree of protection. The kit includes a 3-meter extension cable, gasket, mounting template and mounting screws. The figure below shows how to mount the control panel with the gasket.

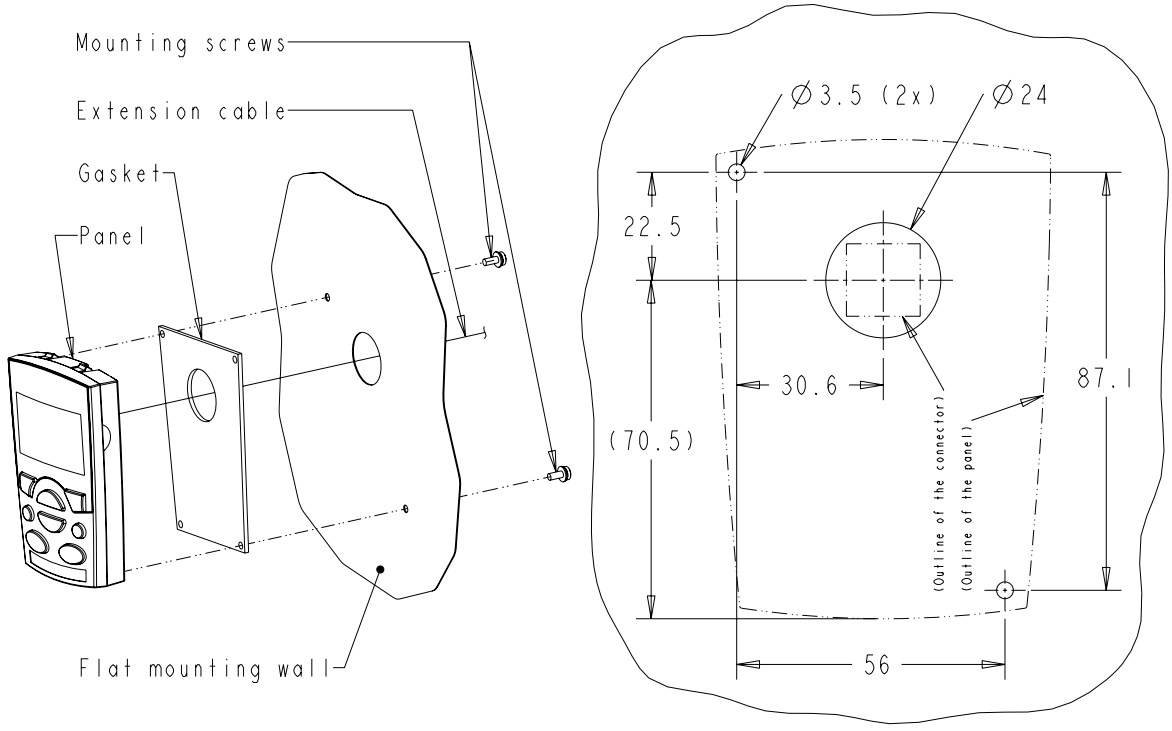

IP66 panel extension cable kit

Use the panel extension cable kit (option) to mount the panel on a cabinet door to maintain the IP66 degree of protection. The kit includes a 3-meter extension cable, cap, mounting template, thread inserts and mounting screws. The figure below shows how to mount the control panel with the cap.

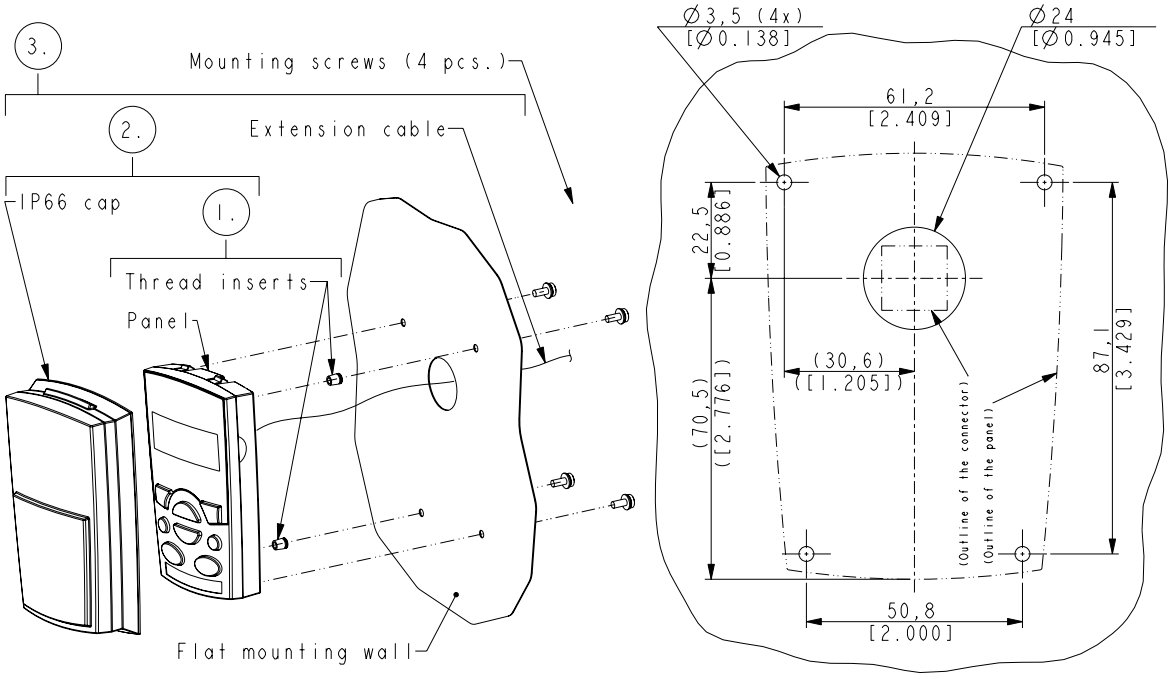

Frame size R1 (IP54 / UL Type 12)

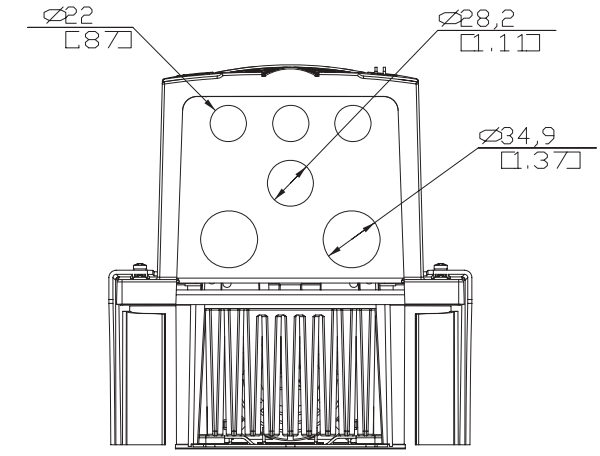

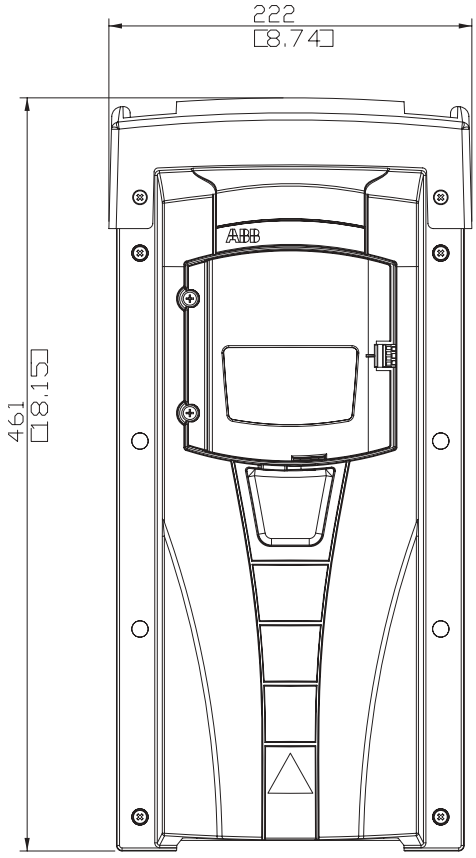

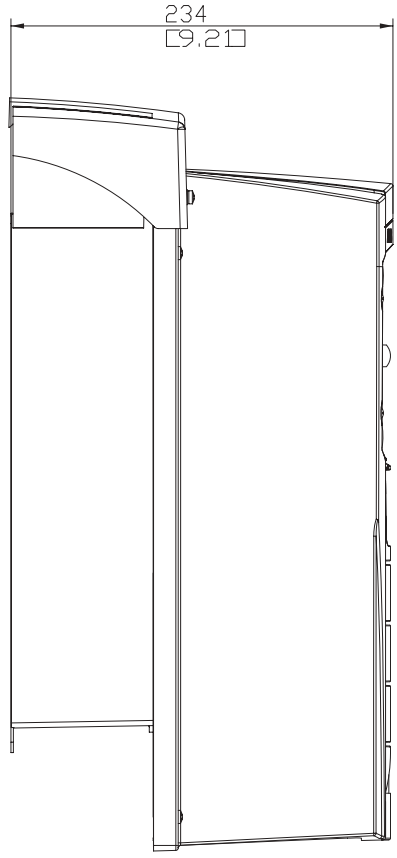

Frame size R2 (IP54 / UL Type 12)

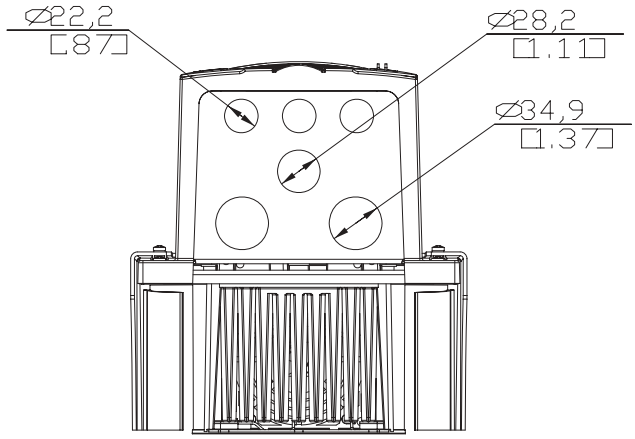

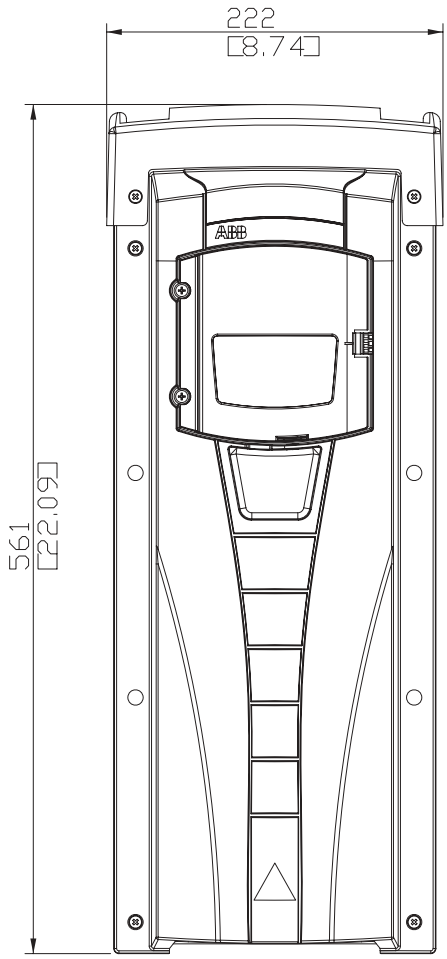

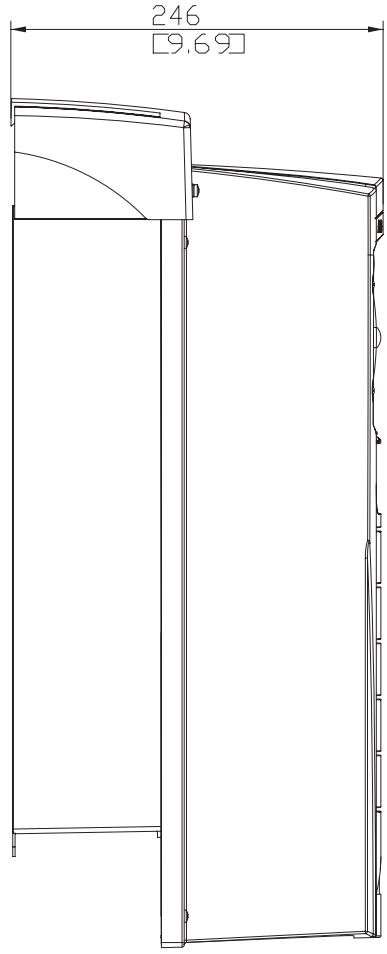

Frame size R3 (IP54 / UL Type 12)

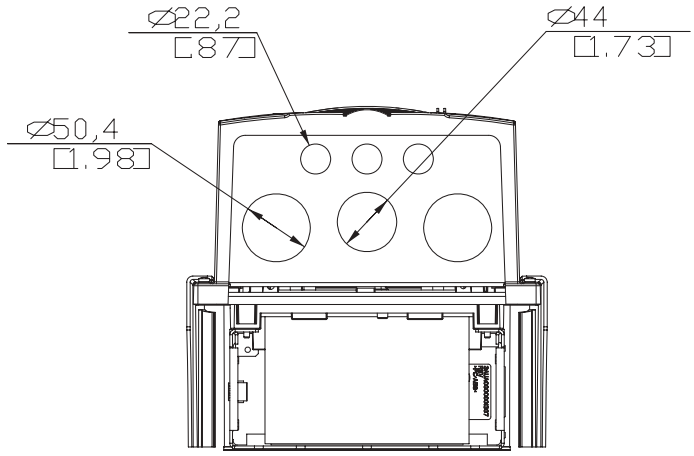

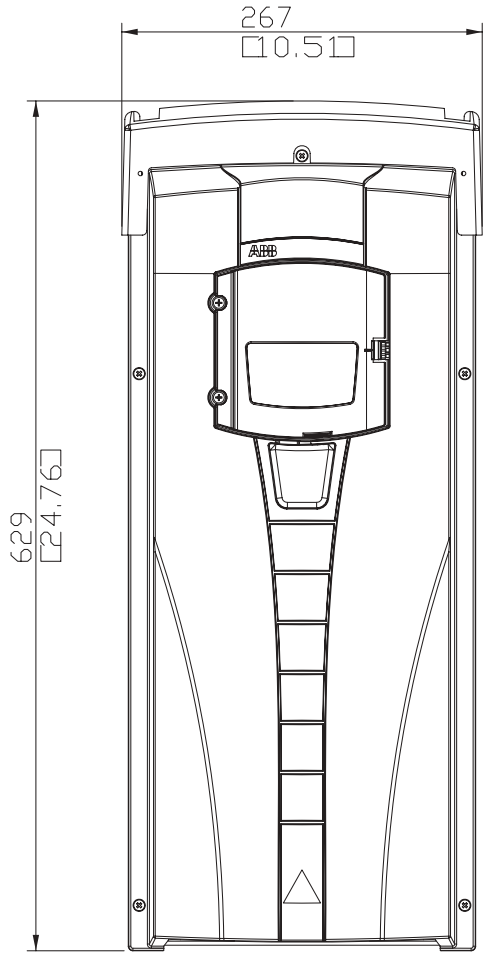

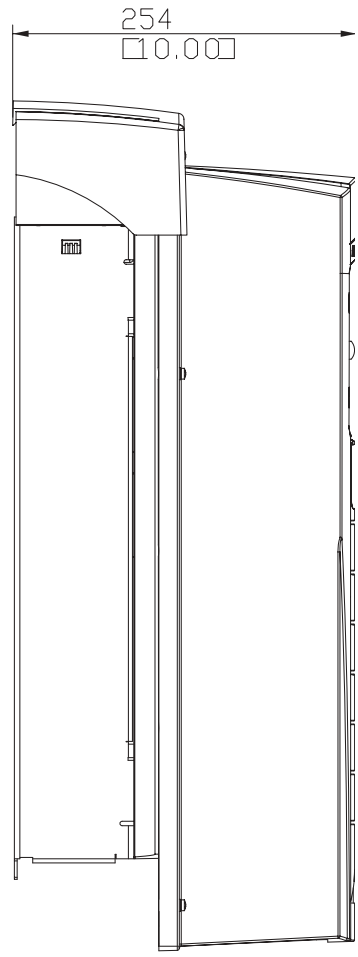

Frame size R4 (IP54 / UL Type 12)

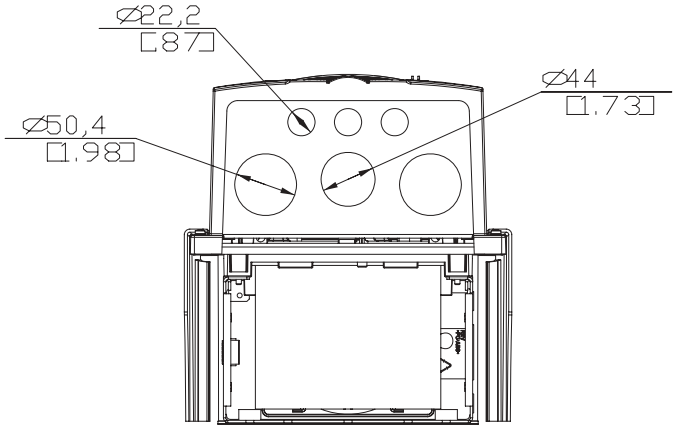

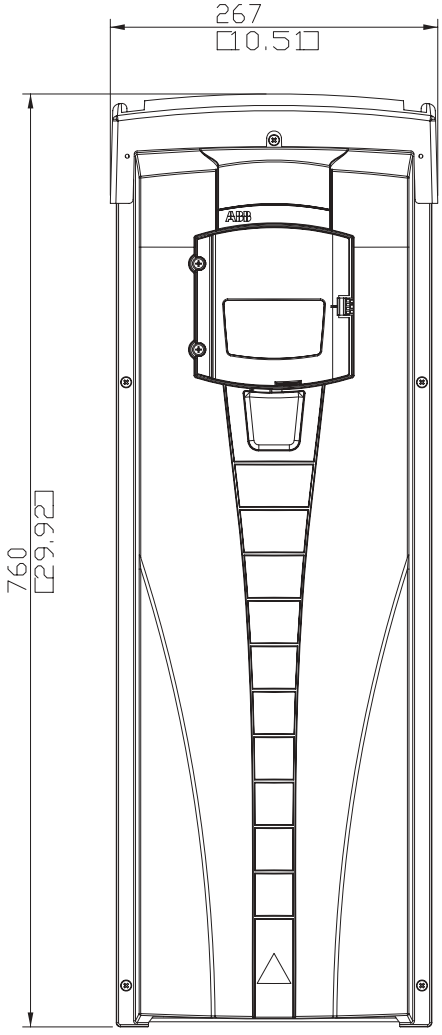

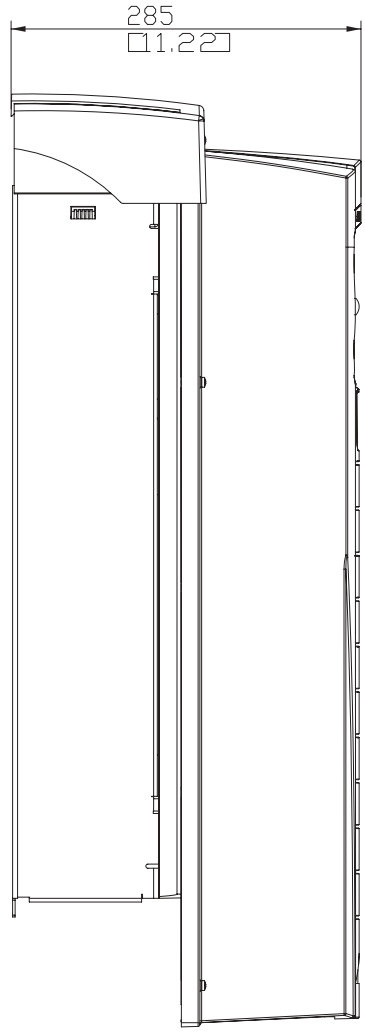

Frame size R5 (IP54 / UL Type 12)

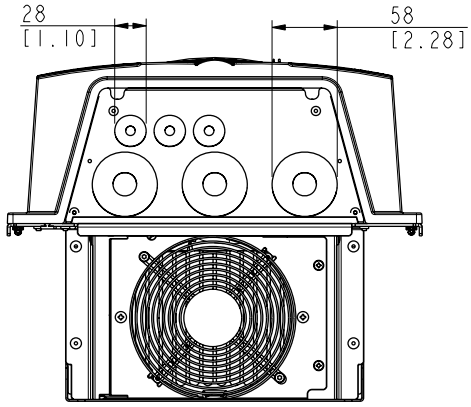

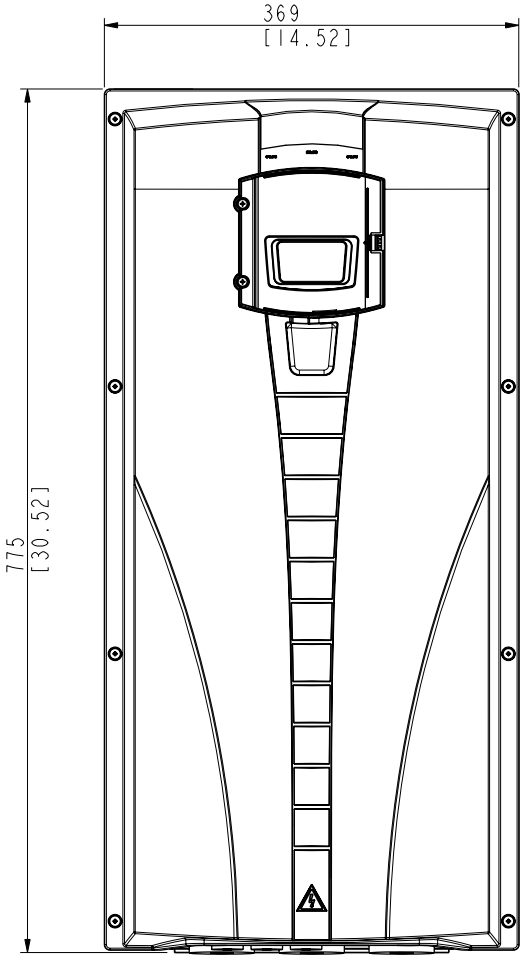

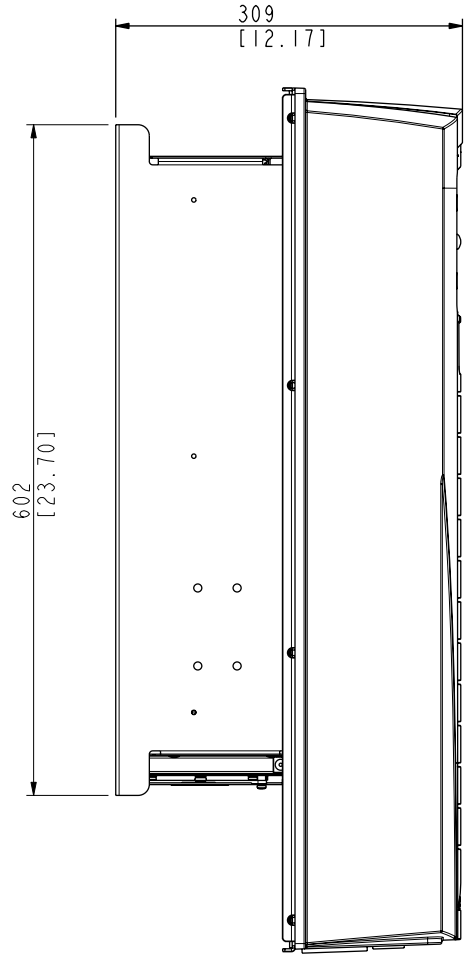

Frame size R6 (IP54 / UL Type 12)

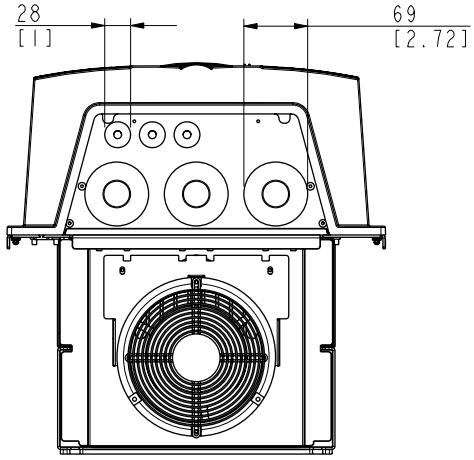

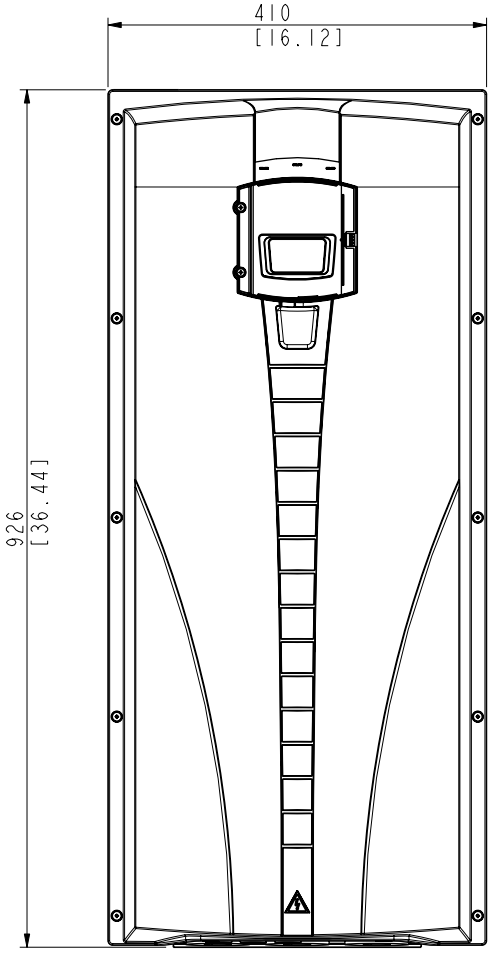

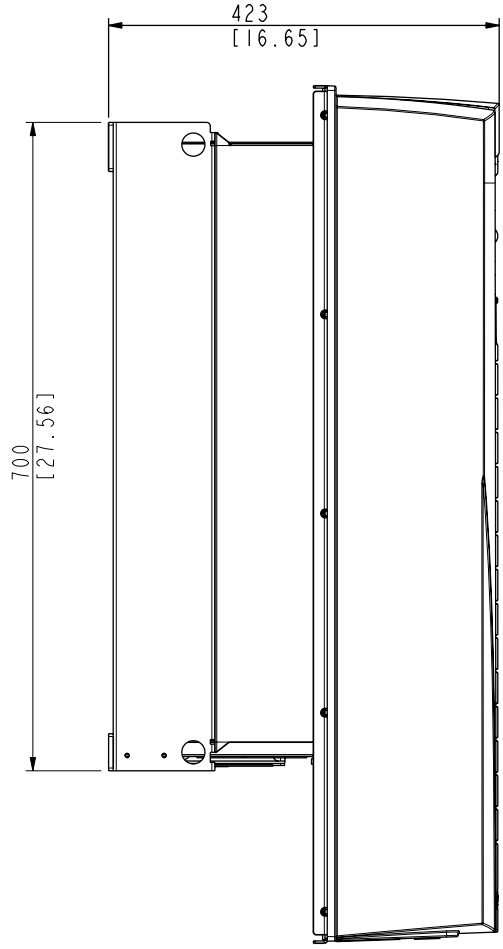

Frame size R1 (IP21 / UL Type 1)

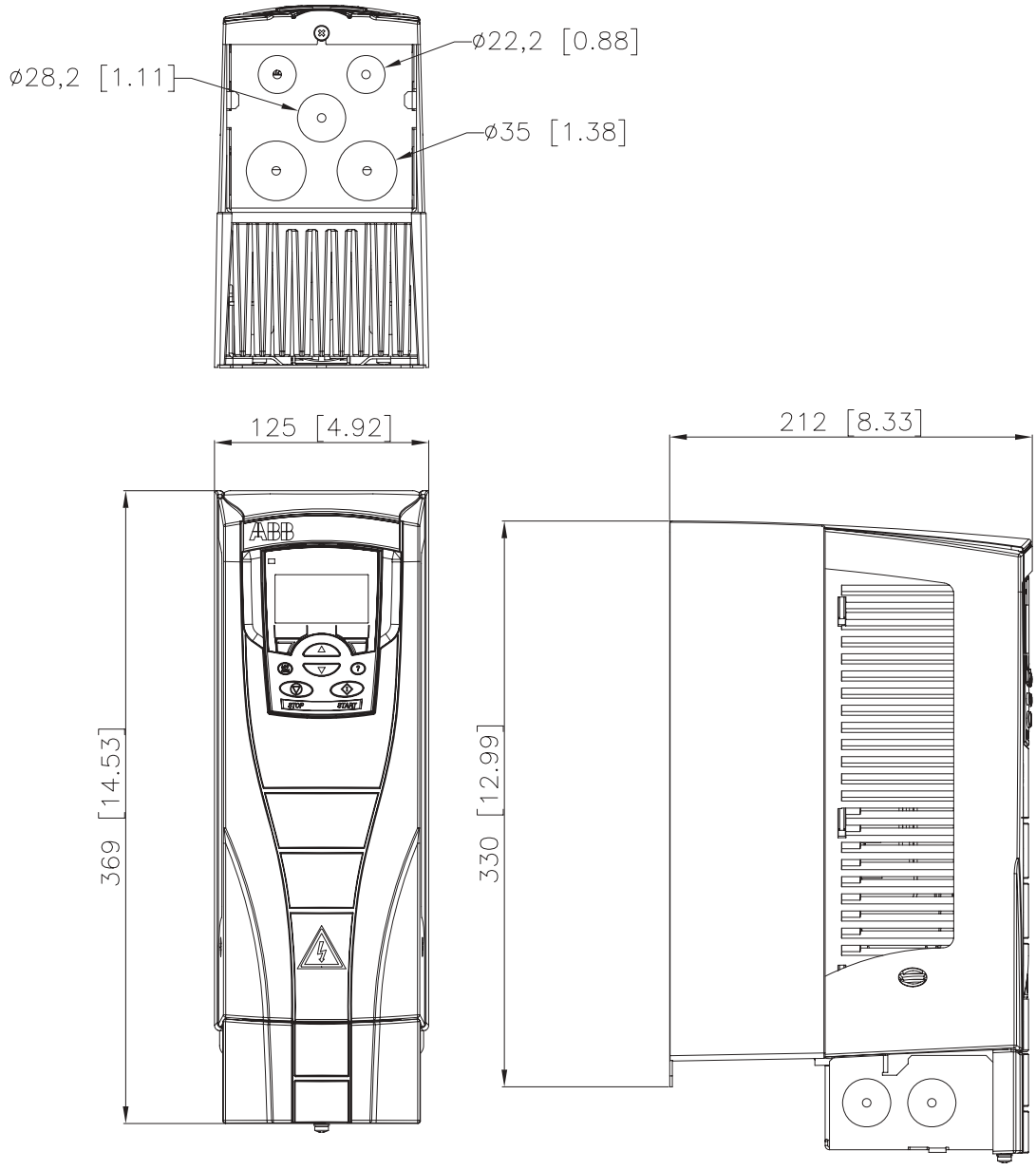

Frame size R2 (IP21 / UL Type 1)

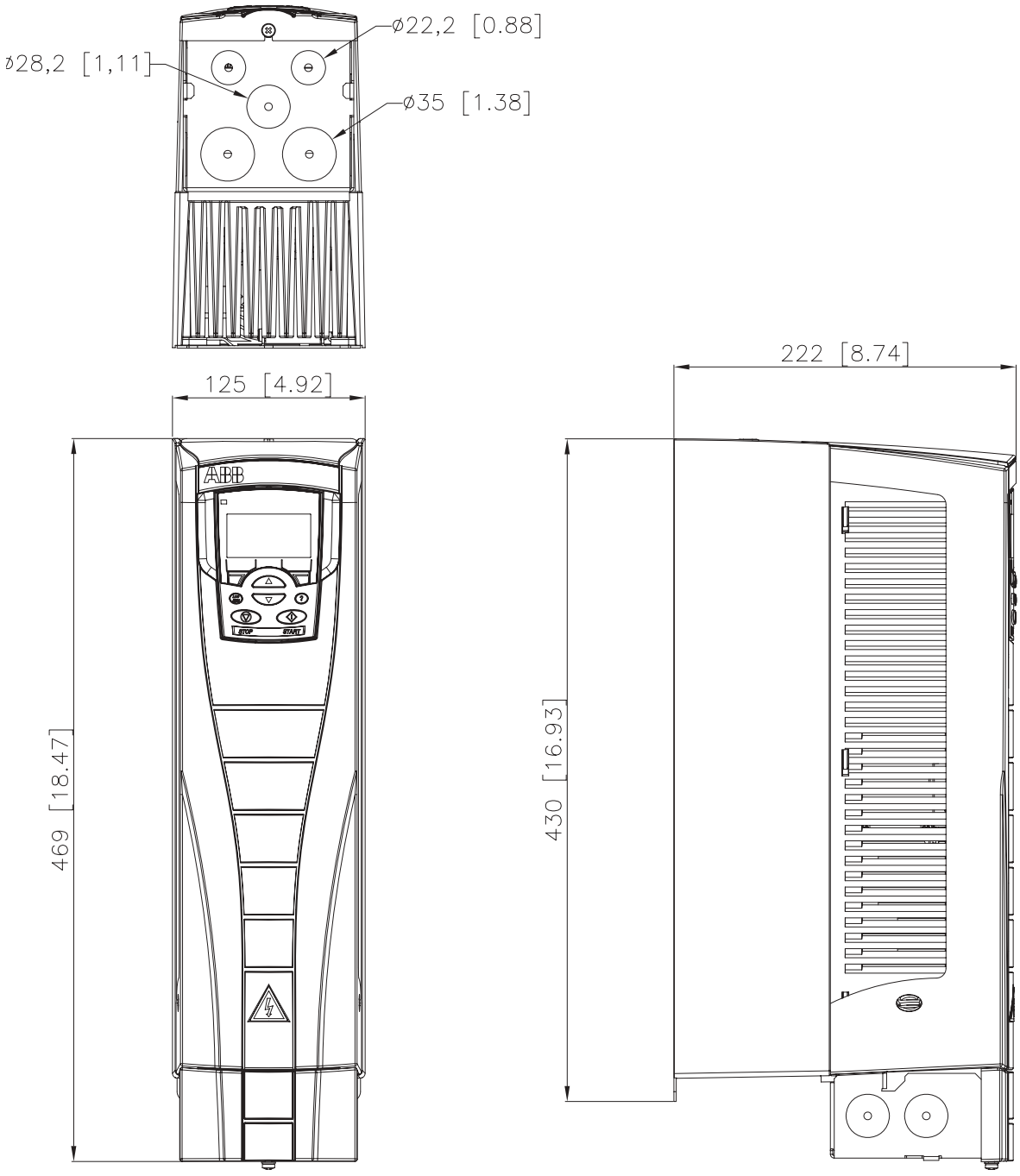

Frame size R3 (IP21 / UL Type 1)

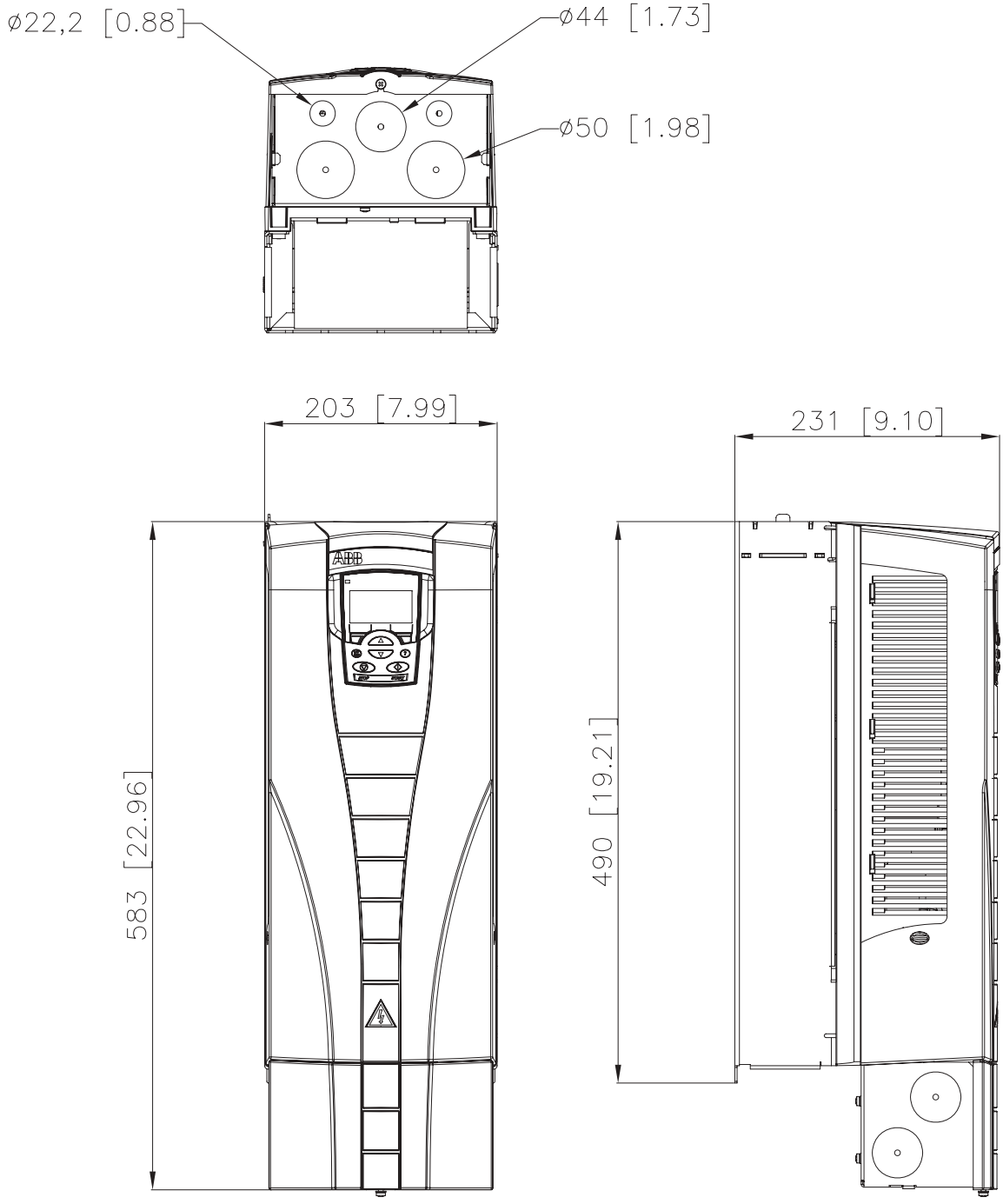

Frame size R4 (IP21 / UL Type 1)

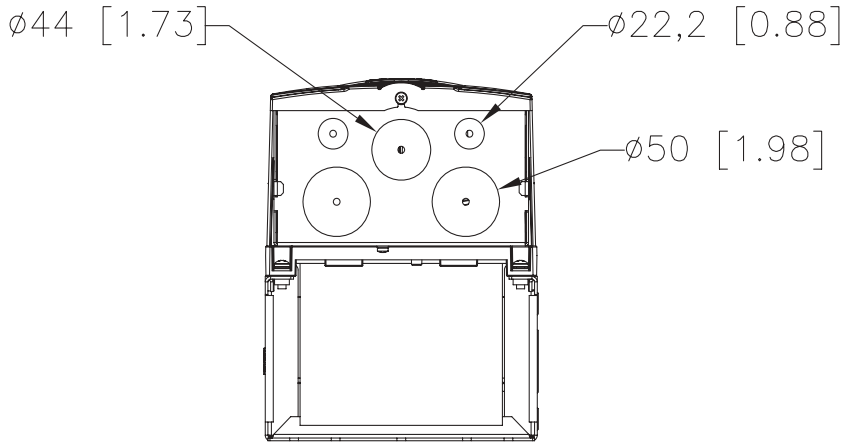

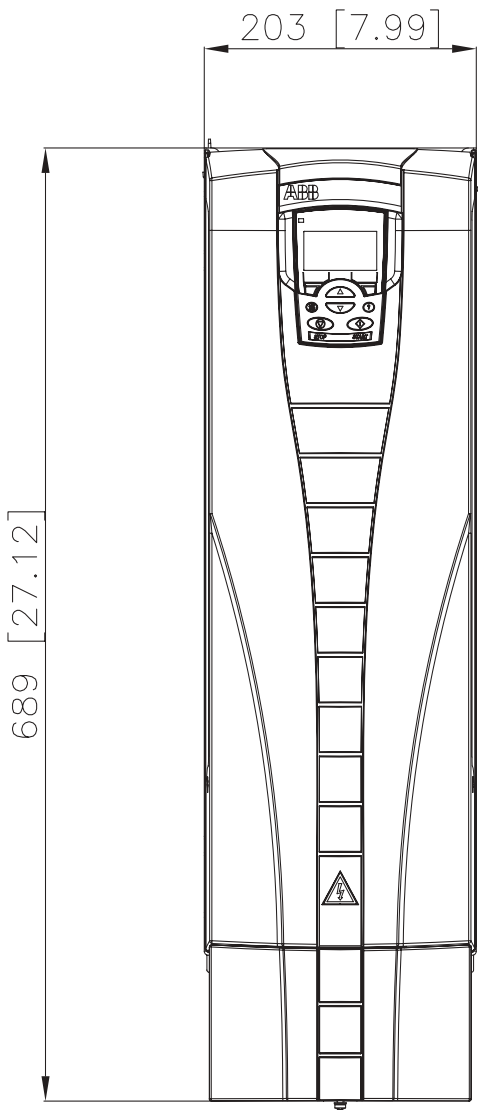

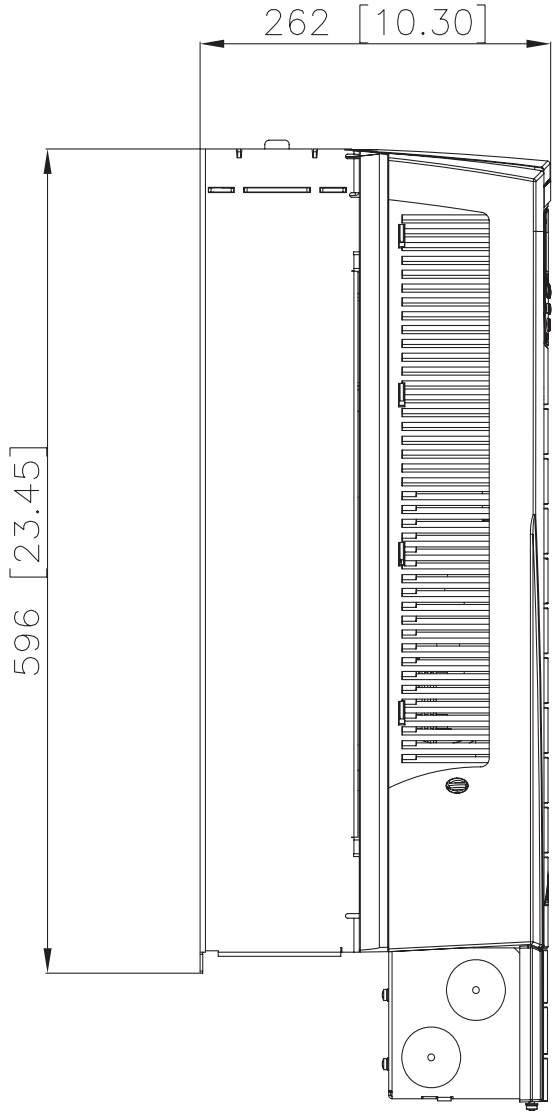

Frame size R5 (IP21 / UL Type 1)

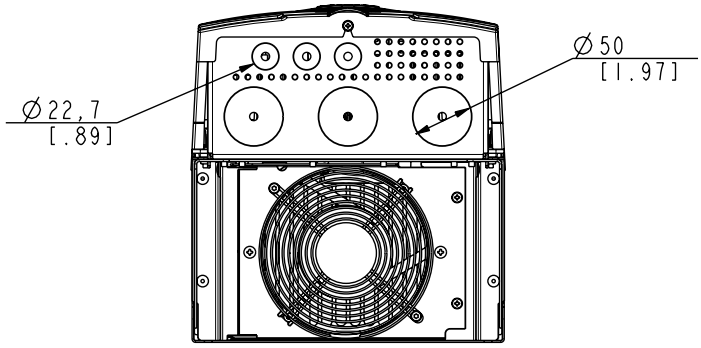

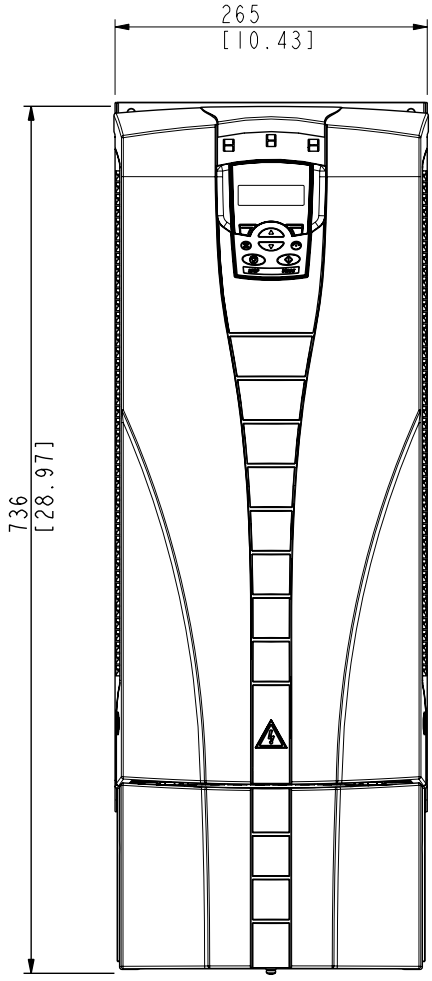

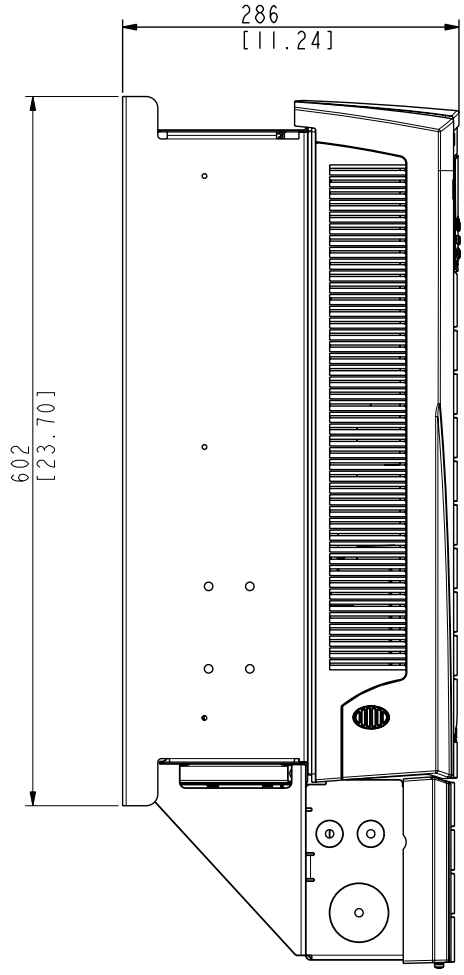

Frame size R6 (IP21 / UL Type 1)

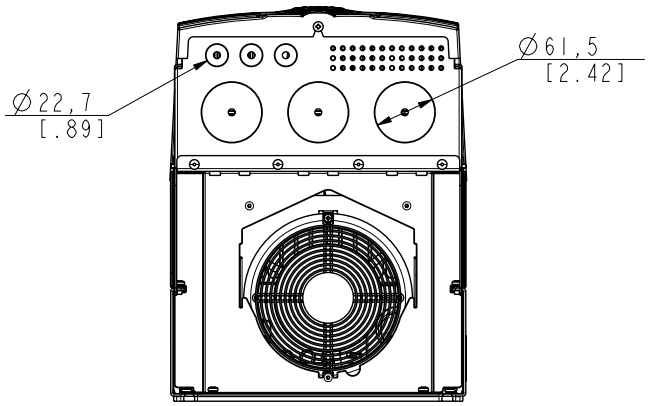

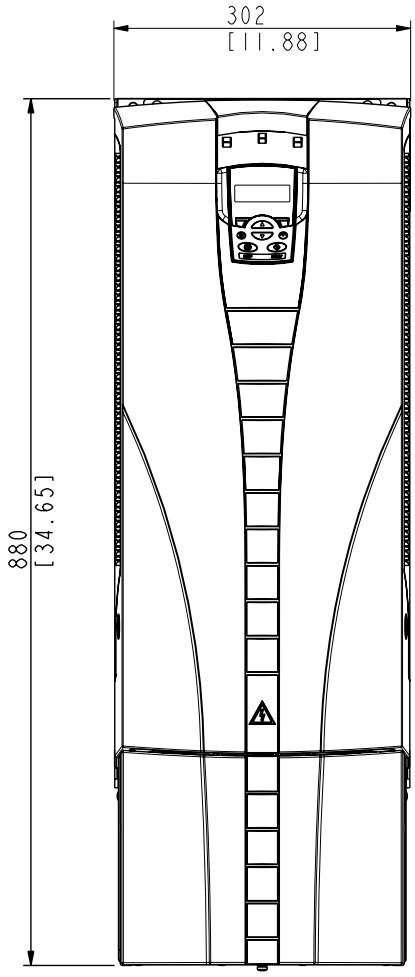

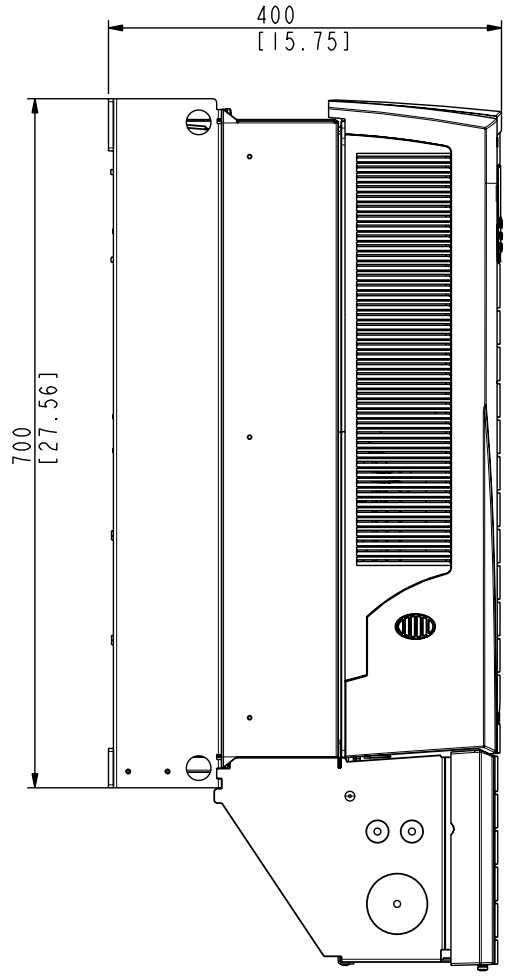

Ambient conditions

The following table lists the ACH550 environmental requirements.

Ambient environment requirements		
	Installation site	Storage and transportation in the protective package
Altitude	• 0…1000 m (0…3,300 ft) • 1000…2000 m (3,300…6,600 ft) if P_N and I_{2N} derated 1% for every 100 m above 1000 m (300 ft above 3,300 ft) • 2000…4000 m (6,600…13,200 ft): Contact your local ABB representative.	
Ambient temperature	• No frost allowed • 400 V drives: See the available currents in -15…50 °C (5…122 °F) in the table on page *379*. • 200 V drives: -15…40 °C (5…104 °F), max. 50 °C (122 °F) if P_N and I_{2N} derated to 90%	-40…70 °C (-40…158 °F)
Relative humidity	<95% (non-condensing)	
Contamination levels (IEC 721-3-3)	• No conductive dust allowed • The ACH550 should be installed in clean air according to enclosure classification. • Cooling air must be clean, free from corrosive materials and free from electrically conductive dust. • Chemical gases: Class 3C2 • Solid particles: Class 3S2	Storage • No conductive dust allowed • Chemical gases: Class 1C2 • Solid particles: Class 1S2 Transportation • No conductive dust allowed • Chemical gases: 2C2 • Solid particles: Class 2S2
Sinusoidal vibration (IEC 60068-2-6)	• Mechanical conditions: Class 3M4 (IEC60721-3-3) • 2…9 Hz 3.0 mm (0.12 in) • 9…200 Hz 10 m/s^2 (33 ft/s^2)	• In accordance with ISTA 1A and 1B specifications.
Shock (IEC 68-2-29)	Not allowed	Max.100 m/s^2 (330 ft/s^2), 11 ms
Free fall	Not allowed	• 76 cm (30 in), frame size R1 • 61 cm (24 in), frame size R2 • 46 cm (18 in), frame size R3 • 31 cm (12 in), frame size R4 • 25 cm (10 in), frame size R5 • 15 cm (6 in), frame size R6

Materials

Material specifications	
Drive enclosure	• PC/ABS 2.5 mm, colour NCS 1502-Y or NCS 7000-N • Hot-dip zinc coated steel sheet 1.5…2 mm, thickness of coating 20 micrometers. If the surface is painted, the total thickness of the coating (zinc and paint) is 80…100 micrometers. • Cast aluminium AlSi • Extruded aluminium AlSi
Package	Corrugated board (drives and option modules), expanded polystyrene. Plastic covering of the package: PE-LD, bands PP or steel.
Disposal	The drive contains raw materials that should be recycled to preserve energy and natural resources. The package materials are environmentally compatible and recyclable. All metal parts can be recycled. The plastic parts can either be recycled or burned under controlled circumstances, according to local regulations. Most recyclable parts are marked with recycling marks. If recycling is not feasible, all parts excluding electrolytic capacitors and printed circuit boards can be landfilled. The DC capacitors contain electrolyte and, if the drive is not provided with the RoHS marking, the printed circuit boards contain lead, both of which are classified as hazardous waste within the EU. They must be removed and handled according to local regulations. For further information on environmental aspects and more detailed recycling instructions, please contact your local ABB representative (see page *424*).

Applicable standards

The drive complies with the following standards:

Applicable standards	
EN 50178 (1997)	Electronic equipment for use in power installations.
IEC/EN 60204-1 (2005)	Safety of machinery. Electrical equipment of machines. Part 1: General requirements. *Provisions for compliance:* The final assembler of the machine is responsible for installing: • an emergency-stop device • a supply disconnecting device.
IEC/EN 60529 (2004)	Degrees of protection provided by enclosures (IP code)
IEC 60664-1 (2002)	Insulation coordination for equipment within low-voltage systems. Part 1: Principles, requirements and tests
IEC/EN 61000-3-12	EMC standard limiting harmonic currents produced by equipment connected to public low-voltage systems
IEC/EN 61800-3 (2004)	Adjustable speed electrical power drive systems. Part 3: EMC requirements and specific test methods
IEC/EN 61800-5-1 (2003)	Adjustable speed electrical power drive systems. Part 5-1: Safety requirements. Electrical, thermal and energy
UL 508C	UL Standard for Safety, Power Conversion Equipment, third edition

CE marking

A CE mark is attached to the drive to verify that the drive follows the provisions of the European Low Voltage and EMC Directives (Directive 73/23/EEC, as amended by 93/68/EEC, and Directive 89/336/EEC, as amended by 93/68/EEC).

Compliance with the EMC Directive

The EMC Directive defines the requirements for immunity and emissions of electrical equipment used within the European

Union. The EMC product standard [IEC/EN 61800-3 (2004)] covers requirements stated for drives.

Compliance with IEC/EN 61800-3 (2004)

See page 420.

C-Tick marking

The ACH550 carries C-Tick marking.

C-Tick marking is required in Australia and New Zealand. A C-Tick mark is attached to the drive to verify compliance with the relevant standard (IEC 61800-3 (2004) – Adjustable speed electrical power drive systems – Part 3: EMC product standard including specific test methods), mandated by the Trans-Tasman Electromagnetic Compatibility Scheme.

The Trans-Tasman Electromagnetic Compatibility Scheme (EMCS) was introduced by the Australian Communication Authority (ACA) and the Radio Spectrum Management Group (RSM) of the New Zealand Ministry of Economic Development (NZMED) in November 2001. The aim of the scheme is to protect the radio frequency spectrum by introducing technical limits for emission from electrical/electronic products.

Compliance with IEC/EN 61800-3 (2004)

See page 420.

UL marking

The ACH550 is suitable for use on a circuit capable of delivering not more than 65,000 rms symmetrical amperes, 480 V maximum. The ACH550 has an electronic motor protection feature that complies with the requirements of UL 508C. When this feature is selected and properly adjusted, additional overload protection is not required unless more than one motor is connected to the drive or unless additional protection is required by applicable safety regulations. See parameters 3005 (MOT THERM PROT) and 3006 (MOT THERM TIME).

The drives are to be used in a controlled environment. See section *Ambient conditions* on page 416 for specific limits.

Note: For open type enclosures, i.e. drives without the conduit box and/or cover for IP21 / UL Type 1 drives, or without the conduit plate and/or top cover for IP54 / UL Type 12 drives, the

drive must be mounted inside an enclosure in accordance with National Electric Code and local electrical codes.

IEC/EN 61800-3 (2004) Definitions

EMC stands for **E**lectro**m**agnetic **C**ompatibility. It is the ability of electrical/electronic equipment to operate without problems within an electromagnetic environment. Likewise, the equipment must not disturb or interfere with any other product or system within its locality.

First environment includes establishments connected to a low-voltage network which supplies buildings used for domestic purposes.

Second environment includes establishments connected to a network not directly supplying domestic premises.

Drive of category C1: drive of rated voltage less than 1000 V, intended for use in the first environment.

Drive of category C2: drive of rated voltage less than 1000 V and intended to be installed and commissioned only by a professional when used in the first environment.

Note: A professional is a person or organisation having necessary skills in installing and/or commissioning power drive systems, including their EMC aspects.

Category C2 has the same EMC emission limits as the earlier class first environment restricted distribution. EMC standard IEC/EN 61800-3 does not any more restrict the distribution of the drive, but the using, installation and commissioning are defined.

Drive of category C3: drive of rated voltage less than 1000 V, intended for use in the second environment and not intended for use in the first environment.

Category C3 has the same EMC emission limits as the earlier class second environment unrestricted distribution.

Compliance with the IEC/EN 61800-3 (2004)

The immunity performance of the drive complies with the demands of IEC/EN 61800-3, category C2 (see page *420* for IEC/EN 61800-3 definitions). The emission limits of IEC/EN 61800-3 are complied with the provisions described below.

First environment (drives of category C2)

1. The internal EMC filter is connected.
2. The motor and control cables are selected as specified in this manual.
3. The drive is installed according to the instructions given in this manual.
4. The motor cable length does not exceed the allowed maximum length specified in section *Motor cable length* on page *390* for the frame size and switching frequency in use.

WARNING! In a domestic environment, this product may cause radio inference, in which case supplementary mitigation measures may be required.

Second environment (drives of category C3)

1. The internal EMC filter is connected.
2. The motor and control cables are selected as specified in this manual.
3. The drive is installed according to the instructions given in this manual.
4. The motor cable length does not exceed the allowed maximum length specified in section *Motor cable length* on page *390* for the frame size and switching frequency in use.

WARNING! A drive of category C3 is not intended to be used on a low-voltage public network which supplies domestic premises. Radio frequency interference is expected if the drive is used on such a network.

Note: It is not allowed to install a drive with the internal EMC filter connected on IT (ungrounded) systems. The supply network becomes connected to ground potential through the EMC filter capacitors which may cause danger or damage the drive.

Note: It is not allowed to install a drive with the internal EMC filter connected to a corner grounded TN system as this would damage the drive.

Equipment warranty and liability

The manufacturer warrants the equipment supplied against defects in design, materials and workmanship for a maximum period of thirty (30) months from the date of manufacturing. The local ABB office or distributor may grant a warranty period different to the above and refer to local terms of liability as defined in the supply contract.

The manufacturer is not responsible for

- any costs resulting from a failure if the installation, commissioning, repair, alternation, or ambient conditions of the drive do not fulfil the requirements specified in the documentation delivered with the unit and other relevant documentation.
- units subjected to misuse, negligence or accident
- units comprised of materials provided or designs stipulated by the purchaser.

In no event shall the manufacturer, its suppliers or subcontractors be liable for special, indirect, incidental or consequential damages, losses or penalties.

This is the sole and exclusive warranty given by the manufacturer with respect to the equipment and is in lieu of and excludes all other warranties, express or implied, arising by operation of law or otherwise, including, but not limited to, any implied warranties of merchantability or fitness for a particular purpose.

If you have any questions concerning your ABB drive, please contact the local distributor or ABB office (see page *424*). The technical data, information and specifications are valid at the time of printing. The manufacturer reserves the right to make modifications without prior notice.

Product protection in the USA

This product is protected by one or more of the following US patents:

4,920,306	5,301,085	5,463,302	5,521,483	5,532,568
5,589,754	5,612,604	5,654,624	5,799,805	5,940,286
5,942,874	5,952,613	6,094,364	6,147,887	6,175,256
6,184,740	6,195,274	6,229,356	6,252,436	6,265,724
6,305,464	6,313,599	6,316,896	6,335,607	6,370,049
6,396,236	6,448,735	6,498,452	6,552,510	6,597,148
6,600,290	6,741,059	6,774,758	6,844,794	6,856,502
6,859,374	6,922,883	6,940,253	6,934,169	6,956,352
6,958,923	6,967,453	6,972,976	6,977,449	6,984,958
6,985,371	6,992,908	6,999,329	7,023,160	7,034,510
7,036,223	7,045,987	7,057,908	7,059,390	7,067,997
7,082,374	7,084,604	7,098,623	7,102,325	7,109,780
7,164,562	7,176,779	7,190,599	7,215,099	7,221,152
7,227,325	7,245,197	7,262,577	D503,931	D510,319
D510,320	D511,137	D511,150	D512,026	D512,696
D521,466	D541,743S	D541,744S	D541,745S	D548,182
D548,183				

Other patents pending.

Contact information

See also section *Product and service inquiries* on page *11*.

Albania(Tirana)
Tel: +355 4 234 368, 363 854
Fax: +355 4 363 854

Algeria
Tel: +212 2224 6168
Fax: +212 2224 6171

Argentina (Valentin Alsina)
Tel: +54 (0)114 229 5707
Fax: +54 (0)114 229 5593

Australia (Victoria - Notting Hill)
Tel: +1800 222 435
Tel: +61 3 8544 0000
email: drives@au.abb.com

Austria (Vienna)
Tel: +43 1 60109 0
Fax: +43 1 60109 8312

Azerbaijan (Baku)
Tel: +994 12 598 54 75
Fax: +994 12 493 73 56

Bahrain (Manama)
Tel: +973 725 377
Fax: +973 725 332

Bangladesh (Dhaka)
Tel: +88 02 8856468
Fax: +88 02 8850906

Belarus (Minsk)
Tel: +375 228 12 40
Tel: +375 228 12 42
Fax: +375 228 12 43

Belgium (Zaventem)
Tel: +32 2 718 6320
Fax: +32 2 718 6664

Bolivia (La Paz)
Tel: +591 2 278 8181
Fax: +591 2 278 8184

Bosnia Herzegovina (Tuzla)
Tel: +387 35 246 020
Fax: +387 35 255 098

Brazil (Osasco)
Tel: 0800 014 9111
Tel: +55 11 3688 9282
Fax: +55 11 3688 9421

Bulgaria (Sofia)
Tel: +359 2 981 4533
Fax: +359 2 980 0846

Canada (Montreal)
Tel: +1 514 420 3100
Fax: +1 514 420 3137

Chile (Santiago)
Tel: +56 2 471 4391
Fax: +56 2 471 4399

China (Beijing)
Tel: +86 10 5821 7788
Fax: +86 10 5821 7618

Colombia (Bogotá)
Tel: +57 1 417 8000
Fax: +57 1 413 4086

Costa Rica (San Jose)
Tel: +506 288 5484
Fax: +506 288 5482

Croatia (Zagreb)
Tel: +385 1 600 8550
Fax: +385 1 619 5111

Czech Republic (Prague)
Tel: +420 234 322 327
e-mail: motors&drives@cz.abb.com

Denmark (Skovlunde)
Tel: +45 44 504 345
Fax: +45 44 504 365

Dominican Republic (Santo Domingo)
Tel: +809 561 9010
Fax: +809 562 9011

Ecuador (Quito)
Tel: +593 2 2500 645
Fax: +593 2 2500 650

Egypt (Cairo)
Tel: +202 6251630
e-mail: drives@eg.abb.com

El Salvador (San Salvador)
Tel: +503 2264 5471
Fax: +503 2264 2497

Estonia (Tallinn)
Tel: +372 6801 800
email: info@ee.abb.com

Ethiopia (Addis Abeba)
Tel: +251 1 669506, 669507
Fax: +251 1 669511

Finland (Helsinki)
Tel: +358 10 22 11
Tel: +358 10 222 1999
Fax: +358 10 222 2913

France (Montluel)
Tel: +33 (0)4 37 40 40 00
Fax: +33 (0)4 37 40 40 72

Germany (Ladenburg)
Tel: +49 (0)1805 222 580 (Service)
Tel: +49 (0)6203 717 717
Fax: +49 (0)6203 717 600

Greece (Athens)
Tel: +30 210 289 1 651
Fax: +30 210 289 1 792

Guatemala (Guatemala City)
Tel: +502 363 3814
Fax: +502 363 3624

Hungary (Budapest)
Tel: +36 1 443 2224
Fax: +36 1 443 2144

India (Bangalore)
Tel: +91 80 2294 9585
Fax: +91 80 2294 9389

Indonesia (Jakarta)
Tel: +62 21 2551 5555
email: automation@id.abb.com

Iran (Tehran)
Tel: +98 21 2222 5120
Fax: +98 21 2222 5157

Ireland (Dublin)
Tel: +353 1 405 7300
Fax: +353 1 405 7312

Israel (Haifa)
Tel: +972 4 850 2111
Fax: +972 4 850 2112

Italy (Milan)
Tel: +39 02 2414 3085
Fax: +39 02 2414 3979

Ivory Coast (Abidjan)
Tel: +225 21 35 42 65
Fax: +225 21 35 04 14

Japan (Tokyo)
Tel: +81(0)3 5784 6010
Fax: +81(0)3 5784 6275

Jordan (Amman)
Tel: +962 6 562 0181
Fax: +962 6 5621369

Kazakhstan (Almaty)
Tel: +7 3272 583838
Fax: +7 3272 583839

Kenya (Nairobi)
Tel: +254 20 828811/13 to 20
Fax: +254 20 828812/21

Kuwait (Kuwait city)
Tel: +965 2428626 ext. 124
Fax: +965 2403139

Latvia (Riga)
Tel: +371 7 063 600
Fax: +371 7 063 601

Lithuania (Vilnius)
Tel: +370 5 273 8300
Fax: +370 5 273 8333

Luxembourg (Leudelange)
Tel: +352 493 116
Fax: +352 492 859

Macedonia (Skopje)
Tel: +389 23 118 010
Fax: +389 23 118 774

Malaysia (Kuala Lumpur)
Tel: +603 5628 4888
Fax: +603 5635 8200

Mauritius (Port-Louis)
Tel: +230 208 7644
Tel: +230 211 8624
Fax: +230 211 4077

Mexico (Mexico City)
Tel: +52 (55) 5328 1400 ext. 3008
Fax: +52 (55) 5328 7467

Morocco (Casablanca)
Tel: +212 2224 6168
Fax: +212 2224 6171

The Netherlands (Rotterdam)
Tel: +31 (0)10 407 8886
e-mail:freqconv@nl.abb.com

New Zealand (Auckland)
Tel: +64 9 356 2170
Fax: +64 9 357 0019

Nigeria (Ikeja, Lagos)
Tel: +234 1 4937 347
Fax: +234 1 4937 329

Norway (Oslo)
Tel: +47 03500
e-mail:drives@no.abb.com

Oman (Muscat)
Tel: +968 2456 7410
Fax: +968 2456 7406

Pakistan (Lahore)
Tel: +92 42 6315 882-85
Fax: +92 42 6368 565

Panama (Panama City)
Tel: +507 209 5400
Tel: +507 209 5408
Fax: +507 209 5401

Peru (Lima)
Tel: +51 1 561 0404
Fax: +51 1 561 3040

The Philippines (Metro Manila)
Tel: +63 2 821 7777/824 4581
Fax: +63 2 824 4637/824 6616

Poland (Lodz)
Tel: +48 42 299 3000
Fax: +48 42 299 3340

Portugal (Oeiras)
Tel: +351 21 425 6000
Fax: +351 21 425 6390
Fax: +351 21 425 6354

Qatar (Doha)
Tel: +974 4253888
Fax: +974 4312630

Romania (Bucharest)
Tel: +40 21 310 4377
Fax: +40 21 310 4383

Russia (Moscow)
Tel: +7 495 960 2200
Fax: +7 495 960 2201

Saudi-Arabia (Al Khobar)
Tel: +966 (0)3 882 9394, ext. 240, 254, 247
Fax: +966 (0)3 882 4603

Senegal (Dakar)
Tel: +221 832 1242
Tel: +221 832 3466
Fax: +221 832 2057, 832 1239

Serbia (Belgrade)
Tel: +381 11 3094 320
Tel: +381 11 3094 300
Fax: +381 11 3094 343

Singapore (Singapore)
Tel: +65 6776 5711
Fax: +65 6778 0222

Slovakia (Banska Bystrica)
Tel: +421 48 410 2324
Fax: +421 48 410 2325

Slovenia (Ljubljana)
Tel: +386 1 2445 440
Fax: +386 1 2445 490

South Africa (Johannesburg)
Tel: +27 11 617 2000
Fax: +27 11 908 2061

South Korea (Seoul)
Tel: +82 2 528 2794
Fax: +82 2 528 2338

Spain (Barcelona)
Tel: +34 (9)3 728 8700
Fax: +34 (9)3 728 8743

Sri Lanka (Colombo)
Tel: +94 11 2399304/6
Fax: +94 11 2399303

Sweden (Västerås)
Tel: +46 (0)21 32 90 00
Fax: +46 (0)21 14 86 71

Switzerland (Zürich)
Tel: +41 (0)58 586 0000
Fax: +41 (0)58 586 0603

Syrian Arab Republic
Tel: +9626 5620181 ext. 502
Fax: +9626 5621369

Taiwan (Taipei)
Tel: +886 2 2577 6090
Fax: +886 2 2577 9467
Fax: +886 2 2577 9434

Tanzania (Dar es Salaam)
Tel: +255 51 2136750
Tel: +255 51 2136751, 2136752
Fax: +255 51 2136749

Thailand (Bangkok)
Tel: +66 (0)2665 1000
Fax: +66 (0)2665 1042

Tunis (Tunis)
Tel: +216 71 860 366
Fax: +216 71 860 255

Turkey (Istanbul)
Tel: +90 216 528 2200
Fax: +90 216 365 2944

Uganda (Nakasero, Kampala)
Tel: +256 41 348 800
Fax: +256 41 348 799

Ukraine (Kiev)
Tel: +380 44 495 22 11
Fax: +380 44 495 22 10

The United Arab Emirates (Dubai)
Tel: +971 4 3147500
Tel: +971 4 3401777
Fax: +971 4 3401771, 3401539

United Kingdom (Daresbury, Warrington)
Tel: +44 1925 741 111
Fax: +44 1925 741 693

Uruguay (Montevideo)
Tel: +598 2 707 7300
Tel: +598 2 707 7466

USA (New Berlin)
Tel: +1 262 785 3200
Fax: +1 262 785 0397

Venezuela (Caracas)
Tel: +58 212 2031924
Fax: +58 212 237 6270

Vietnam (Hochiminh)
Tel: +84 8 8237 972
Fax: +84 8 8237 970

Zimbabwe (Harare)
Tel: +263 4 369 070
Fax: +263 4 369 084

Index

A

ABB
feedback on drive manuals 11
product and service inquiries 11
product training 11
acceleration
/deceleration, parameter group 216
at aux. stop (PFA), parameter 311
compensation, parameter 222
ramp select, parameter 149, 216
ramp shape, parameter 217
ramp time (PFA), parameter 311
ramp zero select, parameter 149, 218
time, parameter 216
activate (external PID), parameter 281
actual input (PID), parameters 151, 274
actual max. (PID), parameters 275
actual min. (PID), parameters 275
actual signals, parameter group 167
ai loss
alarm codes 364
fault codes 354
air flow
208...240 V drives 399
380...480 V drives 398
alarm
codes 363
correcting 363
enable display, parameter 203
indication 353
words, data parameters 170
ambient conditions 416
analogue I/O
connections 394
spec 394
analogue input
connections 394
data parameter 163
fault limit, parameters 237
filter, parameters 187
less than min. auto. reset, parameter 239
less than min., fault parameter 232
loss, alarm codes 364
loss, fault codes 354
maximum, parameters 187
minimum, parameters 187

parameter group 187
ref. correction formula. 180
analogue output
connections 394
content max., parameters. 146, 195
content min., parameters 146, 195
current max., parameters 147, 195
current min., parameters 146, 195
data content, parameters 146, 194
data parameter 164
filter, parameters. 147, 195
parameter group 194
application block output, data parameter 163
application macro, parameter 158
applications (macros) 85
booster pump 98
condenser. 96
cooling tower fan 94
dual setpoint PID 108
dual setpoint PID with constant speeds 110
e-bypass 112
floating point 106
hand control 114
HVAC default 88
internal timer. 102
internal timer with constant speeds 104
powered roof ventilator 104
pump alternation. 100
return fan 92
supply fan 90
arrow 64
assistants 68
auto control
see AUTO mode
AUTO mode 64, 65
autochange
alarm code 366
interval, parameter 298
level, parameter 299
overview 299
starting order counter 301
timed, parameter 312
automatic reset
see reset, automatic
autoreset, alarm code 365
auxiliary motor
see motor, auxiliary

B

backup 73
BACnet 130
    parameters 136
    see also EFB (embedded fieldbus)
battery
    replacement 374
    replacement interval 368
baud rate (RS-232), parameter 285
BMS, Building Management System 85
boost 126
    select, parameter 256
    time, parameter 257
booster pump application macro 98
break point frequency, fault parameter 235
breakers, circuit 384
buffer overruns (count), parameter 286
bus termination 397

C

cable terminals 388
cable, control panel (operator keypad) 34
cables
    control 32, 47, 51
    input power (mains) 44, 48, 381, 386
    motor 28, 44, 48, 390
cabling instructions 28
capacitors
    maintenance intervals 368
    reforming 373
    replacement 373
category
    C1 420
    C2 420
    C3 420
CB
    see control board
CE marking 418
changed parameters mode 72
circuit breakers 384
    ABB S200 B/C miniature (MCB) 383, 384
    ABB Tmax moulded case (MCCB) 383, 385
clock 79, 117
comm
    fault function, parameter 149, 237
    fault time, parameter 149, 237
    protocol select, parameter 134, 140, 313

relay output word, data parameter 165
values, data parameter 165
compatibility
manual
with control panel (operator keypad) 59
with drive firmware 5
motor 21
condenser application macro 96
config file
CPI firmware revision, parameter 141, 283
fault code 357
id revision, parameter 141, 283
revision, parameter 141, 284
connections
communications 397
control 393
analogue I/O 394
digital inputs 394
relay outputs 394
input power (mains) 388
motor 389
constant speed
see speed, constant
contact information 424
control
connections 393
location 64, 65
location, data parameter 163
control board
overtemperature, fault code 358
overtemperature, fault parameter 237
temperature, data parameter 166
control panel (operator keypad) 59
comm error, fault parameter 232
dimensions 402
display decimal point (format), parameters 246
display max., parameters 247
display min., parameters 246
display process variables, parameter group 244
display selection, parameters 244
display units, parameters 246
modes 63
mounting 402
parameter lock, parameter 197
pass code, parameter 198
reference control, parameter 176
signal max., parameters 245
signal min., parameters 245
cooling 397
fan maintenance trigger, parameter 230

fan run time (counter), parameter 230
fan run time trigger, parameter 230
cooling tower fan application macro 94
corner grounded TN system
warning about EMC filters 7
correction source (PID), parameter 282
counter
cooling fan run time, parameter 230
drive power consumption, parameter 231
drive run time, parameter 230
motor revolutions, parameter 230
CRC errors (count), parameter 286
critical speeds (avoiding)
high, parameters 224
low, parameters 224
parameter group 224
select, parameter 224
C-Tick marking 419
current
at fault, history parameter 171
data parameter 162
max. limit, parameter 209
measurement, fault code 356

D

DC
brake time, parameter 214
bus voltage, data parameter 162
current braking selection, parameter 214
current ref., parameter 214
magnetizing time, parameter 214
overvoltage, fault code 354
stabilizer, parameter 229
undervoltage, fault code 354
deceleration
at aux. start (PFA), parameter 311
emergency time, parameter 217
parameter group 216
ramp select, parameter 149, 216
ramp shape, parameter 217
ramp time (PFA), parameter 311
ramp zero select, parameter 149, 218
time, parameter 216
default factory settings 63
degree of protection (IP code) 22
derating 379, 380
derivation time (PID), parameter 269
derivation time, parameter 221
device overtemperature

alarm code 365
fault code 354
diagnostics 351
displays. 352
digital input
at fault, history parameters 171
connections 394
specifications 395
status, data parameter 163
dimensional drawings 399
frame size R1 (IP21 / UL Type 1) 410
frame size R1 (IP54 / UL Type 12) 404
frame size R2 (IP21 / UL Type 1) 411
frame size R2 (IP54 / UL Type 12) 405
frame size R3 (IP21 / UL Type 1) 412
frame size R3 (IP54 / UL Type 12) 406
frame size R4 (IP21 / UL Type 1) 413
frame size R4 (IP54 / UL Type 12) 407
frame size R5 (IP21 / UL Type 1) 414
frame size R5 (IP54 / UL Type 12) 408
frame size R6 (IP21 / UL Type 1) 415
frame size R6 (IP54 / UL Type 12) 409
dimensions 399
control panel (operator keypad) 402
mounting. 400
direction
control, parameter 143, 175
lock, alarm code 364
display
alarms, parameter 203
see also panel display
downloading parameters. 73
drive
id, fault code 357
maintenance trigger, parameter 230, 231
on time, data parameters 166
operating. 65
parameter backup mode. 73
power consumption (counter), parameter. 231
power consumption trigger, parameter. 231
rating, parameter 243
run time (counter), parameter. 230
run time trigger, parameter 230
status information 64
temperature, data parameter 162
dual setpoint PID application macro 108
dual setpoint PID with constant speeds appl. macro 110

E

earth fault
fault code 356
parameter 236
e-bypass application macro 112
EFB (embedded fieldbus) 130, 132
additional delay (Modbus only), parameter 136
BACnet specific communication parameters 136
baud rate, parameter 134, 287
communication parameters 134
config file, fault code 357
connection 132
control 131
control profile, parameter 135, 287
CRC errors (count), parameter 135, 288
drive control parameters 143
fault codes 152, 357
OK messages (count), parameter 135, 287
parameters 136, 288, 289
parity, parameter 135, 287
protocol id, parameter 134, 287
protocol select, parameter 134, 313
protocol selection 134
protocol, parameter group 287
protocols 130
RS485 network termination 132
serial communication assistant 133
setting up communication 132
station id, parameter 134, 287
status, parameter 135, 288
UART errors (count), parameter 135, 288
efficiency 397
ELV (Extra Low Voltage) 47, 52
embedded fieldbus
see EFB
EMC
considerations 26
filter
screws, frame sizes R1...R4 42
screws, frame sizes R5...R6 43
warning for corner grounded TN systems 7
warning for IT systems 7
limits for motor cable length 391
product standard (IEC/EN 61800-3) compliance 420
emergency
deceleration time, parameter 217
stop select, parameter 215
stop, alarm code 366
enclosure (IP code) 22

environment 22
error value inversion (PID), parameter 269
external
    commands selection, parameters. 143, 173
    control selection, parameter 144, 177
    fault
        automatic reset, parameter 239
        fault codes 356
        parameters 233
    power supply 396
    reference, data parameter 162

F

fan
    internal enclosure, replacement 372
    main, replacement 369
    replacement intervals 368
fault
    codes 353
    correcting 353
    current at, history parameter 171
    digital input status at, history parameter. 171
    frequency at, history parameter 171
    functions, parameter group. 232
    history 363
    history, parameter group 171
    indication 352
    last, history parameter 171
    logger mode 83
    previous, history parameter 172
    reset select, parameter. 147, 198
    resetting 362
    speed at, history parameter 171
    status at, history parameter 171
    time of, history parameters 171
    torque at, history parameter 171
    voltage at, history parameter 171
    words, data parameters 169
fault display
    fault names 353
FBA (fieldbus adapter) 130, 137
    communication parameters 140
    config file CPI firmware revision, parameter. 141, 283
    config file id revision, parameter. 141, 283
    config file revision, parameter. 141, 284
    control. 131
    drive control parameters. 143
    fault codes 152
    fieldbus CPI firmware revision, parameter 141, 284
    fieldbus module’s appl. program rev., parameter . . 142, 284

fieldbus parameter refresh, parameter 141, 283
fieldbus parameters 141, 283
fieldbus status, parameter 141, 284
fieldbus type, parameter 140, 283
protocol select, parameter 140, 313
protocol selection 140
serial communication assistant. 139
setting up communication 139
feedback
multiplier (PID), parameter 273
on drive manuals 11
select (PID), parameter 150, 273
fieldbus
command words, data parameters 167
control 131
embedded fieldbus (EFB) comm protocol, par. group . . 287
external comm module (FBA), parameter group 283
fault codes 152
protocol select, parameter 313
status words, data parameters 168
see also EFB (embedded fieldbus)
see also FBA (fieldbus adapter)
firmware
test date parameter 243
version of the drive’s firmware, parameter 243
first environment 420
first start, alarm code. 367
FlashDrop
application macro, parameter 158
connection 42
parameter view, parameter. 204
floating network
see IT system
floating point application macro. 106
flux braking, parameter 226
flux optimization enable, parameter 226
force trip, fault code. 357
frame errors (count), parameter 286
frame size 17
frequency
at fault, history parameter 171
max. limit, parameter 211
min. limit, parameter 210
switching, parameter 228
fuses, input power (mains) 381
208...240 V drives. 383
380...480 V drives. 382

G

gain (PID), parameter 267

H

hand control
    see HAND mode
hand control application macro 114
HAND mode 64, 65
hardware description. 394
harmonics 381
heatsink
    maintenance. 369
    maintenance interval 368
hood
    see top cover
HVAC default application macro 88

I

I/O settings mode 82
id run
    alarm code 366
    fail, fault code 355
    parameter 160
identification
    drive 14
    motor 19
incompatible sw, fault code. 358
information, parameter group 243
input
    kWh, data parameter 166
    MWh, data parameter. 166
input phase loss, alarm code 367
installation 37
    checklist 53
    preparing for 13
        checklist 36
    see also mounting
integration time (PID), parameter 268
integration time, parameter 220
interlock function 290
interlocks, parameter. 302
internal setpoint (PID), parameter. 272
internal timer application macro 102
internal timer with constant speeds application macro 104
IO communication, alarm code 364
IP code 22
IR compensation

frequency, parameter 227
parameters 227
voltage, parameter 227
IT system
warning about EMC filters 7

K

keypad
reference select, parameter 176
see also control panel
kWh
calculated intake energy, data parameter 166
counter, data parameter 163

L

labels. 14
language, parameter. 158
LED 59, 352
green 353
red 352, 362
lifting the drive. 10
limits, parameter group 209
load curve
see user load curve
load frequency
see user load curve
load torque
see user load curve
loading package version, data parameter. 243
local control
see HAND mode
local control (HAND mode) lock, parameter 148, 200
low frequency (PFA), parameters 293

M

macros 85
booster pump 98
condenser. 96
cooling tower fan 94
dual setpoint PID 108
dual setpoint PID with constant speeds 110
e-bypass. 112
floating point 106
hand control 114
HVAC default 88
internal timer. 102
internal timer with constant speeds 104
powered roof ventilator. 104

pump alternation 100
return fan 92
supply fan 90
maintenance 351
battery. 374
capacitors 373
heatsink 369
internal enclosure fan 372
intervals 368
main fan 369
triggers, parameter group 230
manual compatibility
with control panel (operator keypad) 59
with drive firmware 5
manual motor starter 384
manuals
list 2
providing feedback 11
materials 417
maximum
frequency, parameter 211
torque limit, parameters 212
torque select, parameter. 212
MCB (miniature circuit breaker) 383, 384
MCCB (moulded case circuit breaker) 383, 384, 385
minimum
frequency, parameter 210
torque limit, parameters 212
torque select, parameter. 211
mode (control panel operation) 63
assistants 68
changed parameters. 72
drive parameter backup 73
fault logger 83
I/O settings 82
output (standard display) 64
parameters 66
time and date 79
mode (drive control location)
AUTO 64, 65
HAND 64, 65
motor
aux. start delay (PFA), parameter 294
aux. stop delay (PFA), parameter. 294
compatibility 21
control mode, parameter 159
id run, parameter 160
identification 19
load curve break point frequency 235

load curve max., fault parameter 234
load curve zero speed load 234
maintenance trigger, parameter 230
nominal current, parameter 159
nominal frequency, parameter 159
nominal power, parameter 160
nominal speed, parameter 160
nominal voltage, parameter 159
number of aux., parameter 295
overtemperature, alarm code 365
overtemperature, fault code 355
phase, fault code 358
revolution (counter), parameter 230
revolution counter, data parameter. 165
revolution trigger, parameter 230
stall, alarm code 365
stall, fault code 355
starter, manual 384
temperature alarm limit, parameter 252
temperature fault limit, parameter. 252
temperature measurement, parameter group. 249
temperature sensor selection, parameter. 252
temperature sensor type, parameter 251
temperature, data parameter 166
thermal protection. 392
thermal protection, fault parameter. 233
thermal time, fault parameter 234
motor control
IR compensation, parameters 227
parameter group 226
motors
(PFA) parameter. 312
mounting control panel (operator keypad) 402
IP54 panel mounting kit 402
IP66 panel extension cable kit 403
mounting drive. 37
dimensions 400
IP21 41
IP54 40
location, preparing 37
screws 401
suitable location 23
template 9, 37
MWh
calculated intake energy, data parameter 166
counter, data parameter 165
drive power consumption (counter), parameter 231
drive power consumption trigger, parameter 231

N

noise smoothing, parameter 229
NPN. 396

O

off button, alarm code 366
offset (PID), parameter 281
OK messages (count), parameter 285
operating data, parameter group. 162
operating drive 65
operator keypad 59
    see control panel
OPEX
    link, fault code. 356
    power, fault code 356
options, parameter group 313
output frequency, data parameter 162
output mode 64
output voltage, data parameter 162
output wiring, fault code 358
overcurrent
    alarm code 363
    automatic reset, parameter. 238
    fault code 353
overload curve
    see user load curve
override
    alarm code 366
    direction, parameter 208
    enable, parameter 208
    frequency, parameter 207
    mode. 206
    parameter group 205
    parameter set 74, 158
    pass code, parameter. 207
    reference, parameter 208
    selection, parameter 207
    speed, parameter 207
overspeed, fault code 357
overvoltage
    alarm code 363
    automatic reset, parameter. 239

P

package 9
panel
    display variables, parameter group 244

see also control panel
panel loss
alarm code 365
fault code 355
parameter
analogue input scale, fault code 359
analogue output scale, fault code 359
change lock 197
external relay output, fault code 360
fieldbus miss, fault code 360
groups 155
hz rpm, fault code 359
override, fault code 360
PCU 1 (power control unit), fault code 360
PCU 2 (power control unit), fault code 359
PFA and override, fault code 360
PFA IO, fault code 361
PFA mode, fault code 360
PFA ref. neg., fault code 359
save changes, parameter 148, 200
sets 73
table version, parameter 243
user load curve, fault code 361
view, parameter 204
parameters
complete list 314
list and descriptions 155
mode 66
parity (RS-232), parameter 285
parity errors (count), parameter 285
patents 423
PE
earth fault, parameter 236
see cables, input power
see cable terminals
PELV (Protective Extra Low Voltage) 396
PFA
acceleration time, parameter 311
aux. motor start delay, parameter 294
aux. motor stop delay, parameter 294
aux. start order, parameter 312
control, parameter group 290
deceleration time, parameter 311
enable, parameter 310
interlock, alarm code 366
low frequency, parameters 293
motors, parameter 312
number of aux. motors, parameter 295
reference step, parameters 291
start delay, parameter 309

start frequency, parameters 292
PID
0% (actual signal), parameter. 270
100% (actual signal), parameter. 270
actual input select, parameters. 151, 274
actual value max., parameters 275
actual value min., parameters 275
adjustment procedure. 267
comm value 1, data parameter. 166
controllers, overview. 264
correction source, parameter 282
decimal point (actual signal), parameter. 270
derivation filter, parameter 269
derivation time, parameter 269
deviation, data parameter. 165
error feedback inversion, parameter. 269
external source activate, parameter 281
external/trimming, parameter group 281
feedback multiplier, parameter 273
feedback select, parameter 150, 273
feedback, data parameters. 164
gain, parameter 267
integration time, parameter. 268
internal setpoint, parameter 272
offset, parameter 281
output, data parameters 164
parameter set select, parameter. 279
process sets, parameter groups 267, 280
scaling (0%...100%), parameters 270
setpoint maximum, parameter 272
setpoint minimum, parameter. 272
setpoint select, parameter 150, 271
setpoint, data parameters. 164
sleep delay, parameter. 278
sleep level, parameter 277
sleep selection, parameter 276
sleep, alarm code 366
trim mode, parameter 282
trim scale, parameter 282
units (actual signal), parameter 270
wake-up delay, parameter 278
wake-up deviation, parameter 278
PNP. 396
power
data parameter 162
drive consumption (counter), parameter. 231
drive MWh consumption trigger, parameter 231
supply, external 396
powered roof ventilator application macro 104
previous faults, history parameters 172

process PID sets, parameter groups. 267, 280
process variables, data parameters 165
product
    inquiries 11
    training 11
proportional gain, parameter. 219
protection, degree of (IP code) 22
PT100 temperature sensor 251
PTC temperature sensor. 251
pump alternation application macro 100

R

ramp pair (accel/decel), parameter 149, 216
ratings 375
ratings, IEC
    208...240 V drives. 377
    380...480 V drives. 376
real-time clock. 79, 117
reference
    analogue input corrections 180
    corrections for parameter values 180
    keypad control, parameter 176
    maximum, parameters 181
    minimum, parameters. 180
    select source, parameters 144, 178
    select, parameter group 176
reference step (PFA), parameters. 291
reforming capacitors 373
regulator by-pass control, parameter 308
relay output
    activation condition parameters 145, 189
    connections 394
    off-delay, parameters 192
    on-delay, parameters 192
    parameter group. 189
    status, data parameters 164
remote control
    see AUTO mode
replacement
    battery. 374
    capacitors 373
    internal enclosure fan 372
    intervals 368
    main fan 369
reset, automatic
    analogue input less than min., parameter 239
    delay time, parameter. 238
    external fault, parameter. 239

number of trials, parameter 238
overcurrent, parameter 238
overvoltage, parameter 239
parameter group 238
trial time, parameter 238
undervoltage, parameter 239
resonance (avoiding)
select, parameter 224
restore the default factory setting 63
return fan application macro 92
revolution, motor
(counter), parameter 230
counter, data parameter 165
trigger, parameter 230
RS-232
baud rate, parameter 285
panel, parameter group 285
parity, parameter 285
station id, parameter 285
RS-232 counts
buffer overruns, parameter 286
CRC errors, parameter 286
frame errors, parameter 286
OK messages, parameter 285
parity errors, parameter 285
RS485 397
termination for EFB 132
run enable
source select, parameter 147, 197
run time
cooling fan (counter), parameter 230
cooling fan trigger, parameter 230
drive (counter), parameter 230
drive trigger, parameter 230
run time, data parameter 163, 165

S

S200 B/C circuit breaker 383, 384
safety instructions 5, 6
scalar control mode 159
screws, mounting 401
s-curve ramp, parameter 217
second environment 420
sensor type, parameter 251
sensorless vector control mode 159
serial 1 error, fault code 357
serial communication 129
assistant 130, 133, 139

serial number 16
service. 11
setpoint maximum (PID), parameter 272
setpoint minimum (PID), parameter 272
setpoint select (PID), parameter 150, 271
sets 73
short circuit, fault code 354
sleep selection (PID), parameter. 276
slip compensation ratio, parameter 228
speed
    at fault, history parameter 171
    data parameter 162
    max. limit, parameter 209
    min. limit, parameter 209
    signed, data parameter. 162
speed control
    acceleration compensation, parameter 222
    automatic tuning, parameter 223
    derivation time, parameter 221
    integration time, parameter. 220
    parameter group 219
    proportional gain, parameter 219
speed, constant
    digital input selection parameter 183
    parameter 186
    parameter group 183
    timer-activated mode selection, parameter 186
stall
    frequency, fault parameter 236
    function, fault parameter 236
    region 236
    time, fault parameter. 236
standard display mode
    see output mode
standards 418
start
    aux order (PFA), parameter 312
    aux. motor (PFA), parameters 292
    aux. motor delay (PFA), parameter 294
    day, parameters 255
    DC magnetizing time, parameter 214
    delay (PFA), parameter 309
    delay, alarm code 367
    delay, parameter. 215
    frequency (PFA), parameters 292
    function, parameter. 213
    inhibit, parameter 214
    parameter group 213
    time, parameters. 255

torque boost current, parameter 215
start enable
missing, alarm codes 366
source select, parameters 148, 201
start mode
automatic 213
automatic torque boost 213
DC magnetizing 213
flying start 213
start/stop, parameter group 213
start/stop/dir, parameter group 173
starting order counter 301
start-up 60
assistant 68
by changing the parameters individually 62
by using the start-up assistant 60
start-up data, parameter group 158
station id (RS-232), parameter 285
status at fault, history parameter 171
status information of drive 64
stop
aux. motor (PFA), parameters 293
aux. motor delay (PFA), parameter 294
day, parameters 255
DC brake time, parameter 214
DC current braking selection, parameter 214
DC current ref., parameter 214
emergency select, parameter 215
emergency, alarm code 366
flux braking, parameter 226
function, parameter 214
parameter group 213
time, parameters 255
supervision
parameter group 240
parameter high limit, parameters 241
parameter low limit, parameters 241
parameter selection, parameters 240
supply fan application macro 90
supply phase, fault code 356
switching frequency control, parameter 228
switching frequency, parameter 228
system controls, parameter group 197

T

tasks
see assistants
technical data 375

template
control panel (operator keypad) mounting, IP54 402
control panel (operator keypad) mounting, IP66 403
drive mounting 9, 37
terminal layout
R1...R4 42
R5...R6 43
terminals
cable 388
I/O 394
test date, parameter 243
thermal fail, fault code 356
time and date mode 79
time period
start day, parameters 255
start time, parameters 255
stop day, parameters 255
stop time, parameters 255
timed
autochange, parameter 312
timed functions 117
boost select, parameter 256
boost time, parameter 257
parameter group 253
start day, parameters 255
start time, parameters 255
stop day, parameters 255
stop time, parameters 255
timer source, parameters 257
timers enable, parameter 254
timer 118
enable, parameter 254
example 125
source, parameters 257
Tmax circuit breaker 383, 384, 385
TN system
warning about EMC filters 7
top cover 9, 419
torque
at fault, history parameter 171
boost current, parameter 215
data parameter 162
max. limit select, parameter 212
max. limit, parameters 212
min. limit select, parameter 211
min. limit, parameters 212
training 11
trim mode (PID), parameter 282
trim scale (PID), parameter 282

two-wire sensor, connection example 116
type code 16

U

U/f ratio, parameter 227
UL marking 419
underload curve
    see user load curve
undervoltage
    alarm code 364
    automatic reset, parameter 239
    control enable, parameter 210
units (PID), parameter 270
unknown drive type, fault 361
unsymmetrically grounded network
    see corner grounded TN system
uploading parameters 73
user load curve
    parameter group 259
    alarm code 367
    fault code 358
    frequency, parameters 260
    function, parameter 259
    mode, parameter 259
    time, parameter 260
    torque, parameters 260, 261
user parameter set
    change control, parameter 199

V

voltage
    at fault, history parameter 171
voltage/frequency ratio, parameter 227

W

wake-up delay (PID), parameter 278
wake-up deviation (PID), parameter 278
warranty 422
weights 399, 401
wiring 26
    control 47, 51
    fault, parameter 237
    power 44, 48
    terminals 42, 43

XYZ

zero speed load, fault parameter 234

APOGEE is a registered trademark of Siemens Building Technologies Inc.
BACnet is a registered trademark of ASHRAE.
CANopen is a registered trademark of CAN in Automation e.V.
ControlNet is a registered trademark of ControlNet International.
DeviceNet is a registered trademark of Open DeviceNet Vendor Association.
DRIVECOM is a registered trademark of DRIVECOM User Organization.
Ethernet/IP is a registered trademark of Open DeviceNet Vendor Association.
Interbus is a registered trademark of Interbus Club.
LonWorks is a registered trademark of Echelon Corp.
Metasys is a registered trademark of Johnson Controls Inc.
Modbus, Modbus Plus and Modbus/TCP are registered trademarks of Schneider Automation Inc.
PROFIBUS is a registered trademark of Profibus Trade Org.
PROFIBUS DP is a registered trademark of Siemens AG

3AFE68258537 REV E / EN
EFFECTIVE: 20.08.2007
© 2007 ABB Oy. All rights reserved.

ABB Oy
AC Drives
P.O. Box 184
FI-00381 HELSINKI
FINLAND
Tel +358 10 22 11
Fax +358 10 22 22681
Internet www.abb.com

ABB Limited
Daresbury Park
Daresbury
Warrington
Cheshire
WA4 4BT
UNITED KINGDOM
Tel +44 1925 741 111
Fax +44 1925 741 693

ABB Ltd.
Plot No 5 & 6
II Phase
Peenya Industrial Area
Bangalore 560 058
INDIA
Tel +91 80 2294 9585
Fax +91 80 2294 9389

ABB Inc.
Automation Technologies
Drives & Motors
16250 West Glendale Drive
New Berlin, WI 53151
USA
Tel +1 262 785-3200
+1 800-HELP-365
Fax +1 262 785-0397

ABB Beijing Drive Systems Co. Ltd.
No. 1, Block D, A-10 Jiuxianqiao Beilu
Chaoyang District
Beijing, P.R. China, 100015
Tel +86 10 5821 7788
Fax +86 10 5821 7618
Internet www.abb.com