YASKAWA

G7 Drive
Technical Manual

Models: CIMR-G7U Document Number: TM.G7.01

Warnings and Cautions

This Section provides warnings and cautions pertinent to this product, that if not heeded, may result in personal injury, fatality, or equipment damage. Yaskawa is not responsible for consequences of ignoring these instructions.

⚠ WARNING

YASKAWA manufactures component parts that can be used in a wide variety of industrial applications. The selection and application of YASKAWA products remain the responsibility of the equipment designer or end user. YASKAWA accepts no responsibility for the way its products are incorporated into the final system design. Under no circumstances should any YASKAWA product be incorporated into any product or design as the exclusive or sole safety control. Without exception, all controls should be designed to detect faults dynamically and fail safely under all circumstances. All products designed to incorporate a component part manufactured by YASKAWA must be supplied to the end user with appropriate warnings and instructions as to that part's safe use and operation. Any warnings provided by YASKAWA must be promptly provided to the end user. YASKAWA offers an express warranty only as to the quality of its products in conforming to standards and specifications published in the YASKAWA manual. NO OTHER WARRANTY, EXPRESS OR IMPLIED, IS OFFERED. YASKAWA assumes no liability for any personal injury, property damage, losses, or claims arising from misapplication of its products.

⚠ WARNING

- Read and understand this manual before installing, operating, or servicing this Drive. All warnings, cautions, and instructions must be followed. All activity must be performed by qualified personnel. The Drive must be installed according to this manual and local codes.
- Do not connect or disconnect wiring while the power is on. Do not remove covers or touch circuit boards while the power is on. Do not remove or insert the digital operator while power is on.
- Before servicing, disconnect all power to the equipment. The internal capacitor remains charged even after the power supply is turned off. The charge indicator LED will extinguish when the DC bus voltage is below 50Vdc. To prevent electric shock, wait at least five minutes after all indicators are OFF and measure DC bus voltage level to confirm safe level.
- Do not perform a withstand voltage test on any part of the unit. This equipment uses sensitive devices and may be damaged by high voltage.

⚠ WARNING

- The Drive is suitable for circuits capable of delivering not more than 100,000 RMS symmetrical Amperes, 240Vac maximum (200-240V Class) and 480Vac maximum (380-480V Class). Install adequate branch circuit short circuit protection per applicable codes. Failure to do so may result in equipment damage and/or personal injury. Refer to Appendix E for further details.
- Do not connect unapproved LC or RC interference suppression filters, capacitors, or overvoltage protection devices to the output of the Drive. These devices may generate peak currents that exceed Drive specifications.

- To avoid unnecessary fault displays caused by contactors or output switches placed between Drive and motor, auxiliary contacts must be properly integrated into the control logic circuit.
- YASKAWA is not responsible for any modification of the product made by the user; doing so will void the warranty. This product must not be modified.
- Verify that the rated voltage of the Drive matches the voltage of the incoming power supply before applying power.
- To meet CE directives, proper line filters and proper installation are required.
- Some drawings in this manual may be shown with protective covers or shields removed, to describe details. These must be replaced before operation.
- Observe electrostatic discharge procedures when handling circuit boards to prevent ESD damage.
- The equipment may start unexpectedly upon application of power. Clear all personnel from the Drive, motor, and machine area before applying power. Secure covers, couplings, shaft keys, and machine loads before energizing the Drive.
- Please do not connect or operate any equipment with visible damage or missing parts. The operating company is responsible for any injuries or equipment damage resulting from failure to heed the warnings in this manual.

■ Intended Use

Drives are intended for installation in electrical systems or machinery.

The Drives are designed and manufactured in accordance with applicable UL and cUL standards, and CE directives.

For use in the European Union, the installation in machinery and systems must conform to the following product standards of the Low Voltage Directive:

EN 50178: 1997-10, Electronic Equipment for Use in Power Installations

EN 60201-1: 1997-12 Machine Safety and Equipping with Electrical Devices
Part 1: General Requirements (IEC 60204-1:1997)

EN 61010: 1997-11 Safety Requirements for Information Technology Equipment
(IEC 950:1991 + A1:1992 + A2:1993 + A3:1995 + A4:1996, modified)

The F7 series Drives comply with the provisions of the Low Voltage Directive 73/23/EEC as amended by 93/68/EEC. These Drives conform to the following standard: EN 50178: 1997-10.

Your supplier or Yaskawa representative must be contacted when using leakage current circuit breaker in conjunction with frequency drives.

In certain systems it may be necessary to use additional monitoring and safety devices in compliance with the relevant safety and accident prevention regulations. The frequency drive hardware must not be modified.

Safety Precautions

■ Installation

⚠ CAUTION

- Always hold the case when carrying the Drive.
  If the Drive is held by the front cover, the main body of the Drive may fall, possibly resulting in injury.
- Attach the Drive to a metal or other noncombustible material.
  Fire can result if the Drive is attached to a combustible material.
- Install a cooling fan or other cooling device when installing more than one Drive in the same enclosure so that the temperature of the air entering the Drives is below 45°C.
  Overheating can result in fires or other accidents.

Warning Information and Position

There is warning information on the Drive in the position shown in the following illustration. Always heed the warnings.

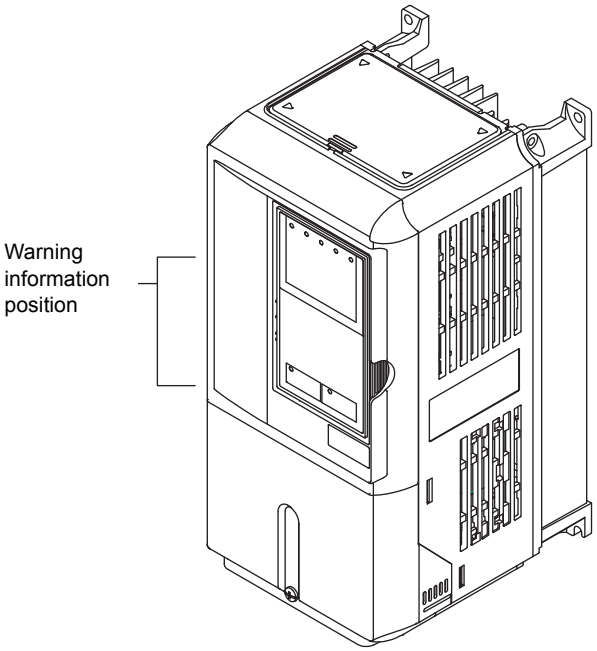

Illustration shows the CIMR-G7U20P4

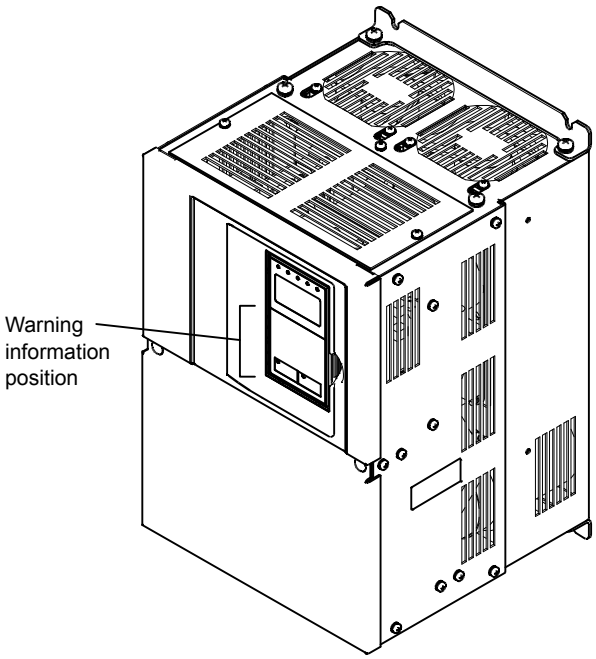

Illustration shows the CIMR-G7U2018

Warning Information

⚠ WARNING

⚠ Risk of electric shock.

- Read manual before installing.
- Wait 5 minutes for capacitor discharge after disconnecting power supply.

⚠ AVERTISSEMENT

⚠ Risque de décharge électrique.

- Lire le manuel avant l' installation.
- Attendre 5 minutes aprés la coupure de l' allmentation. Pour permettre la décharge des condensateurs.

⚠ 危険

⚠ けが・感電のおそれがあります。

- 据え付け・運転の前には必ず取扱説明書をお読み下さい。
- 通電中及び電源遮断後5分以内はフロントカバーを外さないで下さい。

Registered Trademarks

The following registered trademarks are used in this manual.

- DeviceNet is a registered trademark of the ODVA (Open DeviceNet Vendors Association, Inc.).
- ControlNet is a registered trademark of ControlNet International, Ltd.
- LONworks is a registered trademark of the Echelon.
- MODBUS is a registered trademark of the MODBUS.org.

Contents

1 Handling Drives 1-1

Varispeed G7 Introduction 1-2

- ◆ Varispeed G7 Models 1-2

Confirmations upon Delivery 1-3

- ◆ Checks 1-3
- ◆ Nameplate Information 1-3
- ◆ Component Names 1-5

Exterior and Mounting Dimensions 1-7

- ◆ Open Chassis Drives (IP00) 1-7
- ◆ NEMA Type 1 Drives (IP 20) 1-8

Checking and Controlling the Installation Site 1-10

- ◆ Installation Site 1-10
- ◆ Controlling the Ambient Temperature 1-10
- ◆ Protecting the Drive from Foreign Matter 1-10

Installation Orientation and Space 1-11

Removing and Attaching the Terminal Cover 1-12

- ◆ Removing the Terminal Cover 1-12
- ◆ Attaching the Terminal Cover 1-13

Removing/Attaching the Digital Operator and Front Cover 1-14

- ◆ Models CIMR-G7U20P4 thru 2015 and 40P4 thru 4015 1-14
- ◆ Models CIMR-G7U2018 thru 2110 and 4018 thru 4300 1-17

2 Wiring 2-1

Connection Diagram 2-2

Terminal Block Configuration 2-4

Wiring Main Circuit Terminals 2-5

- ◆ Applicable Wire Sizes and Closed-loop Connectors 2-5
- ◆ Main Circuit Terminal Functions 2-13
- ◆ Main Circuit Configurations 2-14
- ◆ Standard Connection Diagrams 2-15
- ◆ Wiring the Main Circuits 2-16

Wiring Control Circuit Terminals 2-22

- ◆ Wire Sizes and Closed-loop Connectors 2-22
- ◆ Control Circuit Terminal Functions 2-23
- ◆ Control Circuit Terminal Connections 2-29

◆ Control Circuit Wiring Precautions 2-30
◆ Control Circuit Wire Sizes 2-30
◆ Wire Checks 2-30

Installing and Wiring Option Cards 2-31

◆ Option Card Models and Specifications 2-31
◆ Installation 2-32
◆ PG Speed Control Card Terminals and Specifications 2-33
◆ Wiring 2-36
◆ Wiring Terminal Blocks 2-40
◆ Selecting the Number of PG (Encoder) Pulses 2-41

3 Digital Operator and Modes 3-1

Digital Operator 3-2

◆ Digital Operator Display 3-2
◆ Digital Operator Keys 3-3

Modes 3-5

◆ Drive Modes 3-5
◆ Switching Modes 3-6
◆ Drive Mode 3-7
◆ Quick Programming Mode 3-9
◆ Advanced Programming Mode 3-10
◆ Verify Mode 3-13
◆ Autotuning Mode 3-14

4 Trial Operation 4-1

Trial Operation Procedure 4-2

Trial Operation Procedures 4-3

◆ Setting the Power Supply Voltage Jumper (380-480V Class Drives of 4055 or Higher) 4-3
◆ Power ON 4-3
◆ Checking the Display Status 4-4
◆ Basic Settings 4-5
◆ Settings for the Control Methods 4-7
◆ Autotuning 4-9
◆ Application Settings 4-14
◆ No-load Operation 4-14
◆ Loaded Operation 4-15
◆ Check and Recording User Parameters 4-16

Adjustment Suggestions 4-17

5 User Parameters 5-1

User Parameter Descriptions 5-2

- Description of User Parameter Tables 5-2

Digital Operation Display Functions and Levels 5-3

- User Parameters Settable in Quick Programming Mode 5-4

User Parameter Tables 5-10

- A: Setup Settings 5-10
- Application Parameters: b 5-12
- Autotuning Parameters: C 5-22
- Reference Parameters: d 5-28
- Motor Setup Parameters: E 5-34
- Option Parameters: F 5-41
- Terminal Function Parameters: H 5-50
- Protection Function Parameters: L 5-61
- N: Special Adjustments 5-74
- Digital Operator Parameters: o 5-80
- T: Motor Autotuning 5-84
- U: Monitor Parameters 5-86
- Factory Settings that Change with the Control Method (A1-02) 5-96
- Factory Settings that Change with the Drive Capacity (o2-04) 5-102

6 Parameter Settings by Function 6-1

Frequency Reference 6-2

- Selecting the Frequency Reference Source 6-2
- Using Multi-Step Speed Operation 6-5

Run Command 6-7

- Selecting the Run Command Source 6-7

Stopping Methods 6-9

- Selecting the Stopping Method when a Stop Command is Sent 6-9
- Using the DC Injection Brake 6-13
- Using an Emergency Stop 6-14

Acceleration and Deceleration Characteristics 6-15

- Setting Acceleration and Deceleration Times 6-15
- Accelerating and Decelerating Heavy Loads (Dwell Function) 6-19
- Preventing the Motor from Stalling During Acceleration (Stall Prevention During Acceleration Function) 6-20
- Preventing Overvoltage During Deceleration (Stall Prevention During Deceleration Function) 6-22

Adjusting Frequency References 6-24

- Adjusting Analog Frequency References 6-24
- Operation Avoiding Resonance (Jump Frequency Function) 6-27
- Adjusting Frequency Reference Using Pulse Train Inputs 6-29

Speed Limit (Frequency Reference Limit Function) 6-30
◆ Limiting Maximum Output Frequency 6-30
◆ Limiting Minimum Frequency 6-31
Improved Operating Efficiency 6-32
◆ Reducing Motor Speed Fluctuation (Slip Compensation Function) 6-32
◆ Compensating for Insufficient Torque at Startup and Low-speed Operation (Torque Compensation) 6-35
◆ Hunting-prevention Function 6-37
◆ Stabilizing Speed (Speed Feedback Detection Function) 6-38
Machine Protection 6-39
◆ Reducing Noise and Leakage Current 6-39
◆ Limiting Motor Torque (Torque Limit Function) 6-42
◆ Preventing Motor Stalling During Operation 6-44
◆ Changing Stall Prevention Level during Operation Using an Analog Input 6-45
◆ Detecting Motor Torque 6-45
◆ Changing Overtorque and Undertorque Detection Levels Using an Analog Input 6-50
◆ Motor Overload Protection 6-51
◆ Setting Motor Protection Operation Time 6-53
◆ Motor Overheating Protection Using PTC Thermistor Inputs 6-54
◆ Limiting Motor Rotation Direction 6-56
Continuing Operation 6-57
◆ Restarting Automatically After Power Is Restored 6-57
◆ Speed Search 6-59
◆ Continuing Operation at Constant Speed When Frequency Reference Is Lost 6-65
◆ Restarting Operation After Transient Error (Auto Restart Function) 6-66
Drive Protection 6-67
◆ Performing Overheating Protection on Mounted Braking Resistors 6-67
◆ Reducing Drive Overheating Pre-Alarm Warning Levels 6-68
Input Terminal Functions 6-69
◆ Temporarily Switching Operation between Digital Operator and Control Circuit Terminals 6-69
◆ Blocking Drive Outputs (Baseblock Commands) 6-70
◆ Stopping Acceleration and Deceleration (Acceleration/Deceleration Ramp Hold) 6-71
◆ Raising and Lowering Frequency References Using Contact Signals (UP/DOWN) 6-72
◆ Accelerating and Decelerating Constant Frequencies in the Analog References (+/- Speed) 6-75
◆ Hold Analog Frequency Using User-set Timing 6-76
◆ Switching Operations between a Communications Option Card and Control Circuit Terminals 6-76
◆ Jog Frequency Operation without Forward and Reverse Commands (FJOG/RJOG) . 6-77
◆ Stopping the Drive by Notifying Programming Device Errors to the Drive (External Fault Function) 6-78

Monitor Parameterss 6-79

- Using the Analog Monitor Parameters 6-79
- Using Pulse Train Monitor Contents 6-82

Individual Functions 6-84

- Using MODBUS Communications 6-84
- Using the Timer Function 6-97
- Using PID Control 6-98
- Energy-saving 6-107
- Setting Motor Parameters 6-108
- Setting the V/f Pattern 6-111
- Torque Control 6-120
- Speed Control (ASR) Structure 6-128
- Droop Control Function 6-134
- Zero-servo Function 6-135

Digital Operator Functions 6-139

- Setting Digital Operator Functions 6-139
- Copying Parameters 6-143
- Prohibiting Writing Parameters from the Digital Operator 6-148
- Setting a Password 6-149
- Displaying User-set Parameters Only 6-149

Options 6-151

- Performing Speed Control with PG 6-151
- Using Digital Output Cards 6-156
- Using an Analog Reference Card 6-159
- Using a Digital Reference Card 6-159

7 Troubleshooting 7-1

Protective and Diagnostic Functions 7-2

- Fault Detection 7-2
- Alarm Detection 7-9
- Operation Errors 7-13
- Errors During Autotuning 7-15
- Errors when Using the Digital Operator Copy Function 7-17

Troubleshooting 7-18

- If Parameters Cannot Be Set 7-18
- If the Motor Does Not Operate 7-19
- If the Direction of the Motor Rotation is Reversed 7-21
- If the Motor Does Not Put Out Torque or If Acceleration is Slow 7-21
- If the Motor Operates Higher Than the Reference 7-22
- If the Slip Compensation Function Has Low Speed Precision 7-22
- If There is Low Speed Control Accuracy at High-speed Rotation in Open-loop Vector Control Mode 7-22

◆ If Motor Deceleration is Slow 7-23
◆ If the Motor Overheats 7-24
◆ If There is Noise When the Drive is Started or From an AM Radio 7-24
◆ If the Ground Fault Interrupter Operates When the Drive is Run 7-25
◆ If There is Mechanical Oscillation 7-25
◆ If the Motor Rotates Even When Drive Output is Stopped 7-26
◆ If 0 V is Detected When the Fan is Started, or Fan Stalls 7-26
◆ If Output Frequency Does Not Rise to Frequency Reference 7-27

8 Maintenance and Inspection 8-1

Maintenance and Inspection 8-2

◆ Outline of Maintenance 8-2
◆ Daily Inspection 8-2
◆ Periodic Inspection 8-2
◆ Periodic Maintenance of Parts 8-3
◆ Cooling Fan Replacement Outline 8-4
◆ Removing and Mounting the Control Circuit Terminal Card 8-6

9 Specifications 9-1

Standard Drive Specifications 9-2

◆ Specifications by Model 9-2
◆ Common Specifications 9-4

Specifications of Options and Peripheral Devices 9-5

10 Appendix 10-1

Varispeed G7 Control Modes 10-2

◆ Control Modes and Features 10-2
◆ Control Modes and Applications 10-6

Drive Application Precautions 10-7

◆ Selection 10-7
◆ Installation 10-8
◆ Settings 10-8
◆ Handling 10-9

Motor Application Precautions 10-10

◆ Using the Drive for an Existing Standard Motor 10-10
◆ Using the Drive for Special Motors 10-11
◆ Power Transmission Mechanism (Speed Reducers, Belts, and Chains) 10-11

Conformance to CE Markings 10-12

◆ CE Markings 10-12
◆ Requirements for Conformance to CE Markings 10-12

User Parameters 10-19

1

Handling Drives

This chapter describes the checks required upon receiving or installing an Drive.

Varispeed G7 Introduction 1-2
Confirmations upon Delivery..... 1-3
Exterior and Mounting Dimensions..... 1-7
Checking and Controlling the Installation Site 1-10
Installation Orientation and Space 1-11
Removing and Attaching the Terminal Cover 1-12
Removing/Attaching the Digital Operator and Front Cover 1-14

Varispeed G7 Introduction

◆ Varispeed G7 Models

The Varispeed-G7 Series of Drives included two Drives in two voltage classes: 200-240V and 380-480V. Maximum motor capacities vary from 20P4 to 2110 and 40P4 to 4300 (42 models).

Table 1.1 Varispeed G7 Models

Voltage Class	Maximum Motor Capacity kW	Varispeed G7		Specifications (Always specify through the protective structure when ordering.)	
		Output Capacity kVA	Basic Model Number	Open Chassis (IEC IP00) CIMR-G7□□□□□□	Enclosed Wall-mounted (IEC IP20, NEMA 1) CIMR-G7□□□□□□
200-240V class	0.4	1.2	CIMR-G7U20P4	Remove the top and bottom covers from the Enclosed Wall-mounted model.	20P41□
	0.75	2.3	CIMR-G7U20P7		20P71□
	1.5	3.0	CIMR-G7U21P5		21P51□
	2.2	4.6	CIMR-G7U22P2		22P21□
	3.7	6.9	CIMR-G7U23P7		23P71□
	5.5	10	CIMR-G7U25P5		25P51□
	7.5	13	CIMR-G7U27P5		27P51□
	11	19	CIMR-G7U2011		2011□
	15	25	CIMR-G7U2015		20151□
	18.5	30	CIMR-G7U2018		20181□
	22	37	CIMR-G7U2022	-	20220□
	30	50	CIMR-G7U2030	20300□	-
	37	61	CIMR-G7U2037	20370□	-
	45	70	CIMR-G7U2045	20450□	-
	55	85	CIMR-G7U2055	20550□	-
	75	110	CIMR-G7U2075	20750□	-
	90	140	CIMR-G7U2090	20900□	-
	110	160	CIMR-G7U2110	21100□	-
380-480V class	0.4	1.4	CIMR-G7U40P4	Remove the top and bottom covers from the Enclosed Wall-mount model.	40P41□
	0.75	2.6	CIMR-G7U40P7		40P71□
	1.5	3.7	CIMR-G7U41P5		41P51□
	2.2	4.7	CIMR-G7U42P2		42P21□
	3.7	6.9	CIMR-G7U43P7		43P71□
	4.0	8.4	CIMR-G7U44P0		44P01□
	5.5	11	CIMR-G7U45P5		45P51□
	7.5	16	CIMR-G7U47P5		47P51□
	11	21	CIMR-G7U4011		40111□
	15	26	CIMR-G7U4015		40151□
	18.5	32	CIMR-G7U4018		40181□
	22	40	CIMR-G7U4022	-	40221□
	30	50	CIMR-G7U4030	-	40301□
	37	61	CIMR-G7U4037	-	40371□
	45	74	CIMR-G7U4045	-	40451□
	55	98	CIMR-G7U4055	40550□	-
	75	130	CIMR-G7U4075	40750□	-
	90	150	CIMR-G7U4090	40900□	-
	110	180	CIMR-G7U4110	41100□	-
	132	210	CIMR-G7U4132	41320□	-
	160	230	CIMR-G7U4160	41600□	-
	185	280	CIMR-G7U4185	41850□	-
	220	340	CIMR-G7U4220	42200□	-
	300	460	CIMR-G7U4300	43000□	-

Confirmations upon Delivery

◆ Checks

Check the following items as soon as the Drive is delivered.

Table 1.2 Checks

Item	Method
Has the correct model of Drive been delivered?	Check the model number on the nameplate on the side of the Drive.
Is the Drive damaged in any way?	Inspect the entire exterior of the Drive to see if there are any scratches or other damage resulting from shipping.
Are any screws or other components loose?	Use a screwdriver or other tools to check for tightness.

If you find any irregularities in the above items, contact the agency from which you purchased the Drive or your Yaskawa representative immediately.

◆ Nameplate Information

There is a nameplate attached to the side of each Drive. The nameplate shows the model number, specifications, lot number, serial number, and other information on the Drive.

■ Example Nameplate

The following nameplate is an example for a standard Drive: 3-phase, 200-240Vac, 0.4kW, IEC IP20 and NEMA 1 standards.

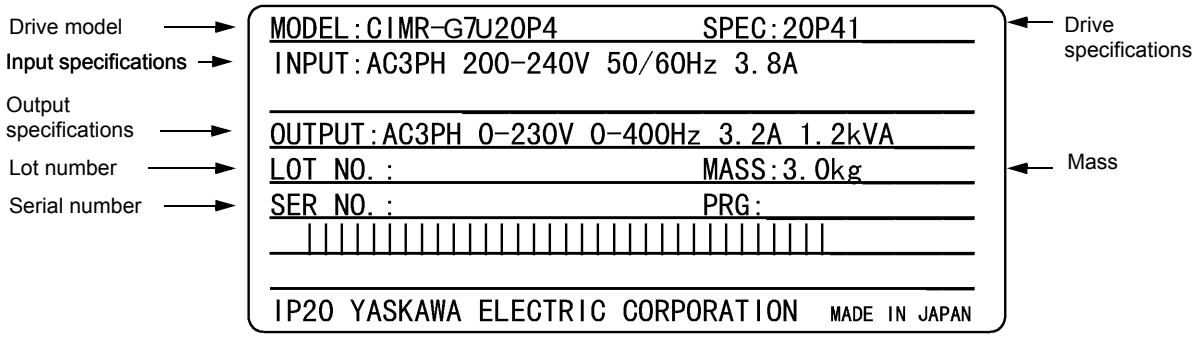

Fig 1.1 Nameplate

■Drive Model Numbers

The model number of the Drive on the nameplate indicates the specification, voltage class, and maximum motor capacity of the Drive in alphanumeric codes.

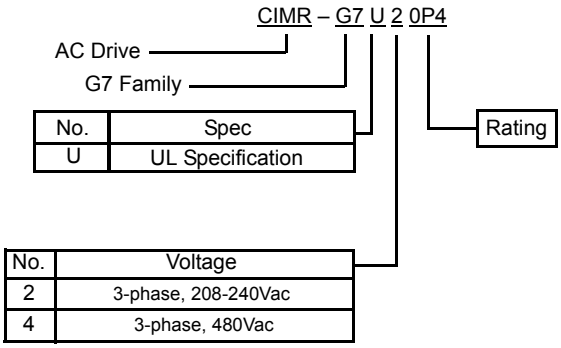

Fig 1.2 Drive Model Numbers

■Drive Specifications

The SPEC number on the nameplate indicates the voltage, Drive rating, enclosure type, and the revision code of the Drive in alphanumeric codes. The SPEC number for Drives that have custom features, i.e. CASE software, will have a SPEC number that indicates the custom features installed.

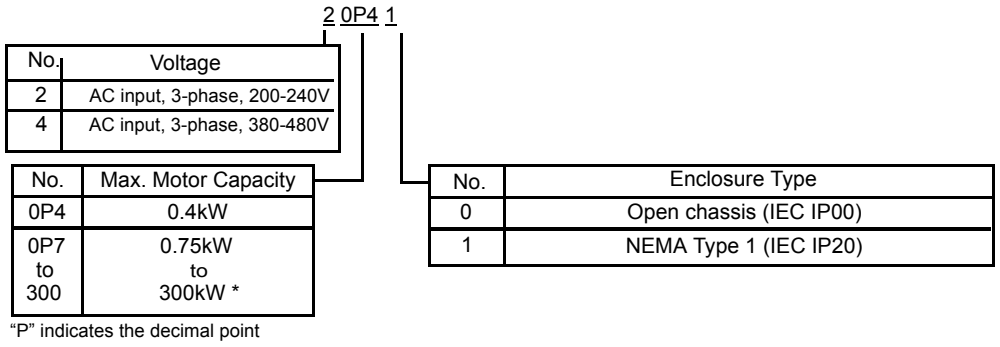

Fig 1.3 Drive Specifications

TERMS

Open Chassis Type (IEC IP00)

Protected so that parts of the human body cannot reach electrically charged parts from the front when the Drive is mounted in a control panel.

NEMA Type 1 (IEC IP20)

The Drive is shielded from the exterior, and can thus be mounted to the interior wall of a standard building (not necessarily enclosed in a control panel). The protective structure conforms to the standards of NEMA 1 in the USA.

Top protective cover must be installed to conform with IEC IP20 and NEMA 1 Type 1 requirements. Refer to Fig. 1.4 for details.

◆ Component Names

■ Models CIMR-G7U20P4 thru 2015 and 40P4 thru 4015

The external appearance and component names of the Drive are shown in *Fig 1.4*. The Drive with the terminal cover removed is shown in *Fig 1.5*.

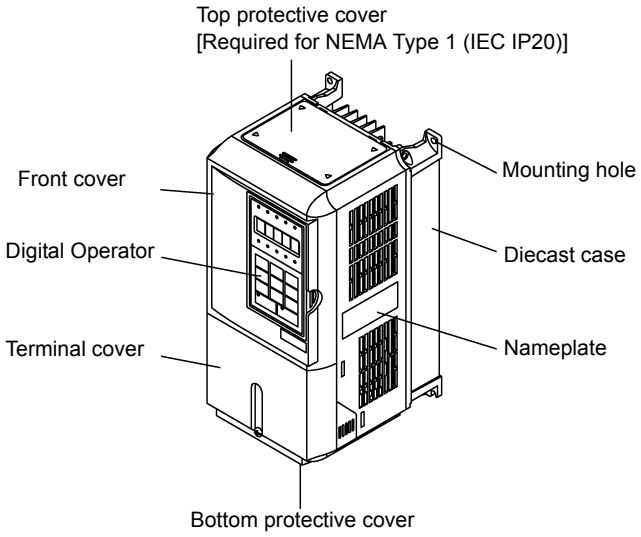

Fig 1.4 Drive Appearance

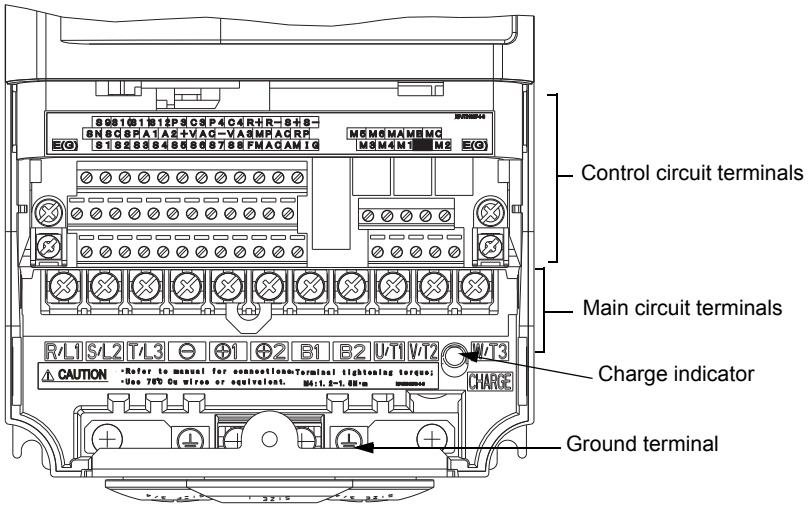

Fig 1.5 Terminal Arrangement

■ Models CIMR-G7U2018 thru 2110 and 4018 thru 4300

The external appearance and component names of the Drive are shown in *Fig 1.6*. The Drive with the terminal cover removed is shown in *Fig 1.7*.

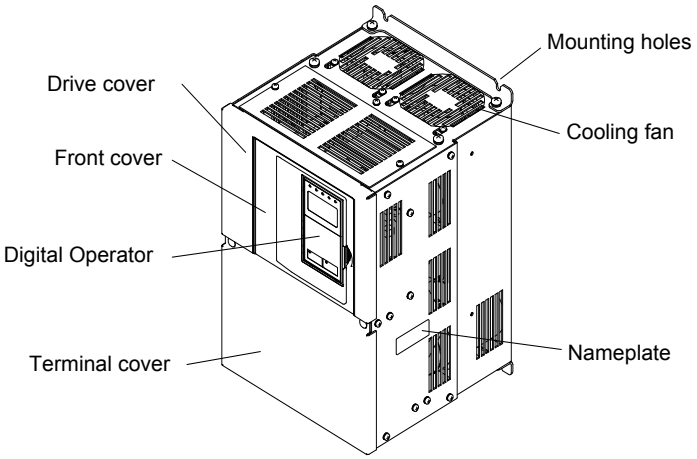

Fig 1.6 Drive Appearance

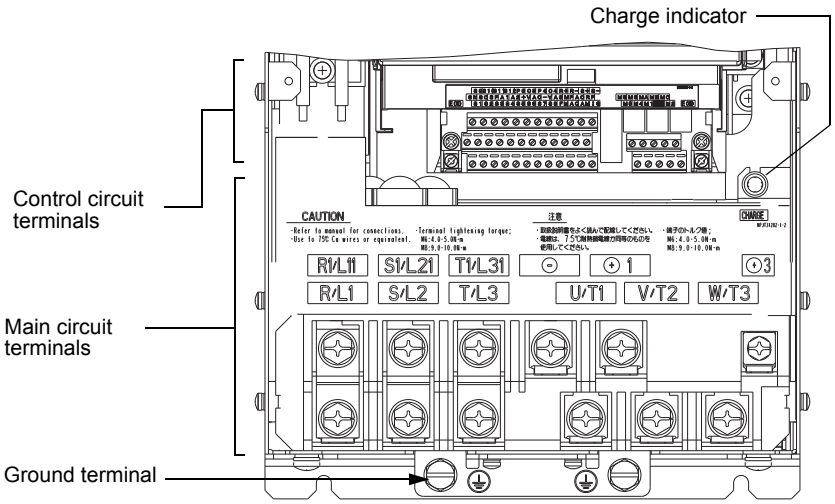

Fig 1.7 Terminal Arrangement

Exterior and Mounting Dimensions

◆ Open Chassis Drives (IP00)

Exterior diagrams of the Open Chassis Drives are shown below.

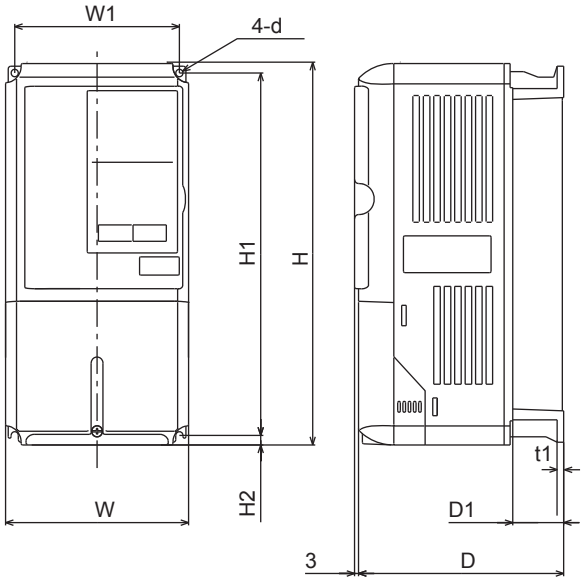

Models CIMR-G7U20P4 thru 2015 and 40P4 thru 4015

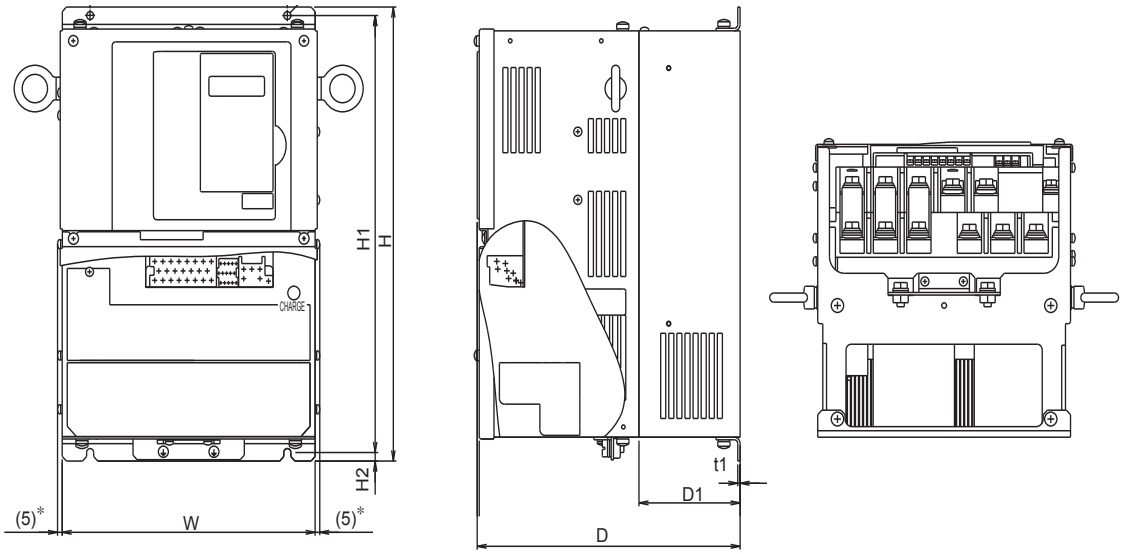

Front View Side View Bottom View

Models CIMR-G7U2018 thru 2110 and 4018 thru 4160

◆ NEMA Type 1 Drives (IP 20)

Exterior diagrams of the Enclosed Wall-mounted Drives (NEMA1 Type 1) are shown below.

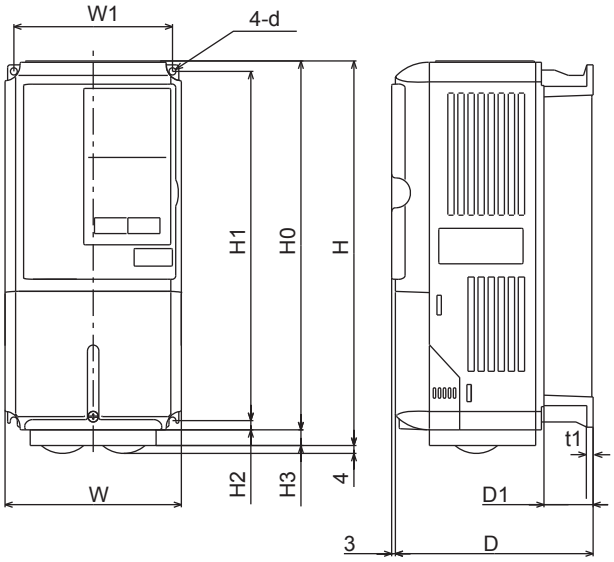

Models CIMR-G7U20P4 thru 2015 and 40P4 thru 4015

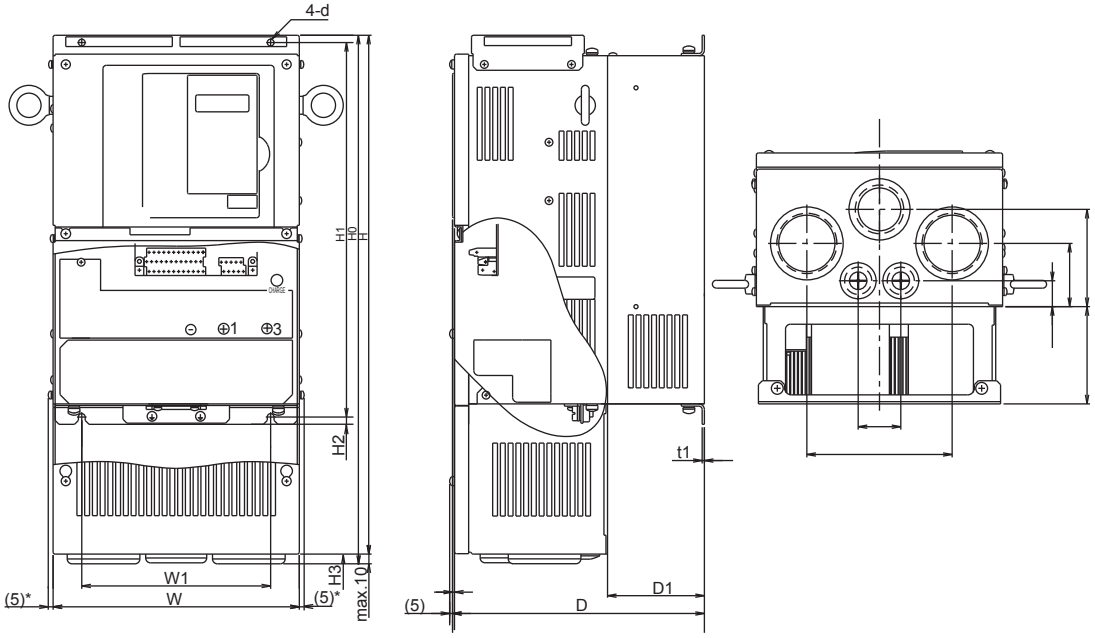

Front View Side View Bottom View

Models CIMR-G7U2018 thru 2075 and 4018 thru 4160

Table 1.3 Drive Dimensions (mm) and Masses (kg)

Voltage Class	Model CIMR-G7U	Dimensions (mm)																					Heat Generation (W)			Cooling Method
		Open Chassis (IP00)									Enclosed Wall-mounted (NEMA Type 1)															
		W	H	D	W1	H1	H2	D1	t1	Approx Mass	W	H	D	W1	H0	H1	H2	H3	D1	t1	Approx Mass	Mounting Holes*	External	Internal	Total Heat	
200-240V (3-phase)	20P4	140	280	157	126	266	7	39	5	3	140	280	157	126	280	266	7	0	39	5	3	M5	21	36	57	Natural
	20P7																						43	42	85	
	21P5																						58	47	105	
	22P2			177				59		4			177						59		4		83	53	136	Fan
	23P7																						122	64	186	
	25P5	200	300	197	186	285	8	65.5	2.3	6	200	300	197	186	300	285	8		65.5	2.3	6	M6	187	87	274	
	27P5									7								0			7		263	112	375	
	2011	240	350	207	216	335	7.5	78		11	240	350	207	216	350	335	7.5	0	78		11		357	136	493	
	2015											380						30					473	174	647	
	2018	250	400	260	195	385		100		21	254	535	260	195	400	385		135	100		24		599	241	840	
	2022	275	450		220	435				24	279	613		220	450	435		165			27		679	257	936	
	2030	375	600	300	250	575	12.5	100	3.2	57	380	809	298	250	600	575	12.5	209	100	3.2	62	M10	878	362	1240	
	2037			330				130		63			328						130		68		1080	434	1514	
	2045	450	725	350	325	700				86	453	1027	348	325	725	700		302			94		1291	510	1801	
	2055									87											95		1474	607	2081	
	2075	500	850	360	370	820	15		4.5	108	504	1243	361	370	850	820	15	393		4.5	114	M12	2009	823	2832	
	2090	575	885	380	445	855		140		150	---												1660	871	2531	
	2110																						2389	1194	3583	
380-480V (3-phase)	40P4	140	280	157	126	266	7	39	5	3.5	140	280	157	126	280	266	7	0	39	5	3.5	M5	10	39	49	Natural
	40P7																						21	44	65	
	41P5			177				59		4.5			177						59		4.5		33	46	79	Fan
	42P2																						41	49	90	
	43P7																						77	63	140	
	44P0																						100	66	166	
	45P5	200	300	197	186	285	8	65.5	2.3	7	200	300	197	186	300	285	8		65.5	2.3	6	M6	132	80	212	
	47P5																						197	107	304	
	4011	240	350	207	216	335	7.5	78		10	240	350	207	216	350	335	7.5		78		10		246	116	362	
	4015																						311	135	446	
	4018	275	450	258	220	435		100		26	279	535	258	220	450	435		85	100		29		354	174	528	
	4022																						516	210	726	
	4030	325	550	283	260	535		105		37	329	635	285	260	550	535			105		39		633	246	879	
	4037																						737	285	1022	
	4045											715						165			40		929	340	1269	
	4055	450	725	348	325	700	12.5	130	3.2	90	453	1027	348	325	725	700	12.5	302	130	3.2	98	M10	1239	488	1727	
	4075									91											99		1554	597	2151	
	4090	500	850	358	370	820	15		4.5	109	504	1243	358	370	850	820	15	393		4.5	127	M12	1928	762	2690	
	4110									127											137		2299	928	3227	
	4132	575	916	378	445	855	45.8	140		165	579	1324	378	445	916	855	45.8	408	140		175		2612	1105	3717	
	4160									175											185		3614	1501	5115	
	4185	See Table 1.4																								
	4220																									
	4300																									

* Same for Open Chassis and Enclosed Wall-mounted Drives

Table 1.4 480Vac (185 to 300 kW) Drive Dimensions (mm) and Masses (kg)

Voltage Class	Model CIMR-G7U	Dimensions (mm)																							Heat Generation (W)			Cooling Method
		Open Chassis (IP00)											Enclosed Wall-mounted (NEMA Type1)															
		W	H	D	W1	W2	W3	H1	H2	D1	t1	Approx Mass	W	H	D	W1	W2	W3	H1	H2	D1	t1	Approx Mass	Mounting Holes*	External	Internal	Total Heat	
380-480V (3-phase)	4185	710	1305	413	540	240	270	1270	15	125.5	4.5	260	---											M12	4436	1995	6431	Fan
	4220											280													5329	2205	7534	
	4300	916	1475	413	730	365	365	1440	15	125.5	4.5	415													6749	2941	9690	

Checking and Controlling the Installation Site

Install the Drive in the installation site described below and maintain optimum conditions.

◆ Installation Site

Install the Drive to a non-combustible surface under the following conditions in UL Pollution Degree 2 environments. This excludes wet locations where pollution may become conductive due to moisture, and locations containing conductive foreign matter

Table 1.5 Installation Site

Type	Ambient Operating Temperature	Humidity
NEMA Type 1	14° F to 104°F (-10 to + 40 °C)	95% RH or less (no condensation)
Open chassis	14° F to 113°F (-10 to + 45 °C)	95% RH or less (no condensation)

Protective covers are attached to the top and bottom of the Drive. It is recommended to remove the protective covers before operating a NEMA Type 1 Drive (Models CIMR-G7U2015/4015 and smaller) in a panel to obtain the 113° (45°C) ambient operating temperature.

Observe the following precautions when installing the Drive. Make sure to install:

- In a clean location which is free from oil mist and dust.
- In an environment where metal shavings, oil, water, or other foreign materials do not get into the Drive.
- In a location free from radioactive materials and combustible materials (e.g. wood).
- In a location free from harmful gases and liquids.
- In a location free from excessive vibration.
- In a location free from chlorides
- In a location away from direct sunlight.

◆ Controlling the Ambient Temperature

To enhance the reliability of operation, the Drive should be installed in an environment free from extreme temperature variation. If the Drive is installed in an enclosure, use a cooling fan or air conditioner to maintain the internal air temperature below 113°F (45°C).

◆ Protecting the Drive from Foreign Matter

During Drive installation and project construction, it is possible to have foreign matter such as metal shavings or wire clippings fall inside the Drive. To prevent foreign matter from falling into the Drive, place a temporary cover over the Drive.

Always remove the temporary cover from the Drive before start-up. Otherwise, ventilation will be reduced, causing the Drive to overheat.

Installation Orientation and Space

Install the Drive vertically so as not to reduce the cooling effect. When installing the Drive, always provide the following installation space to allow normal heat dissipation.

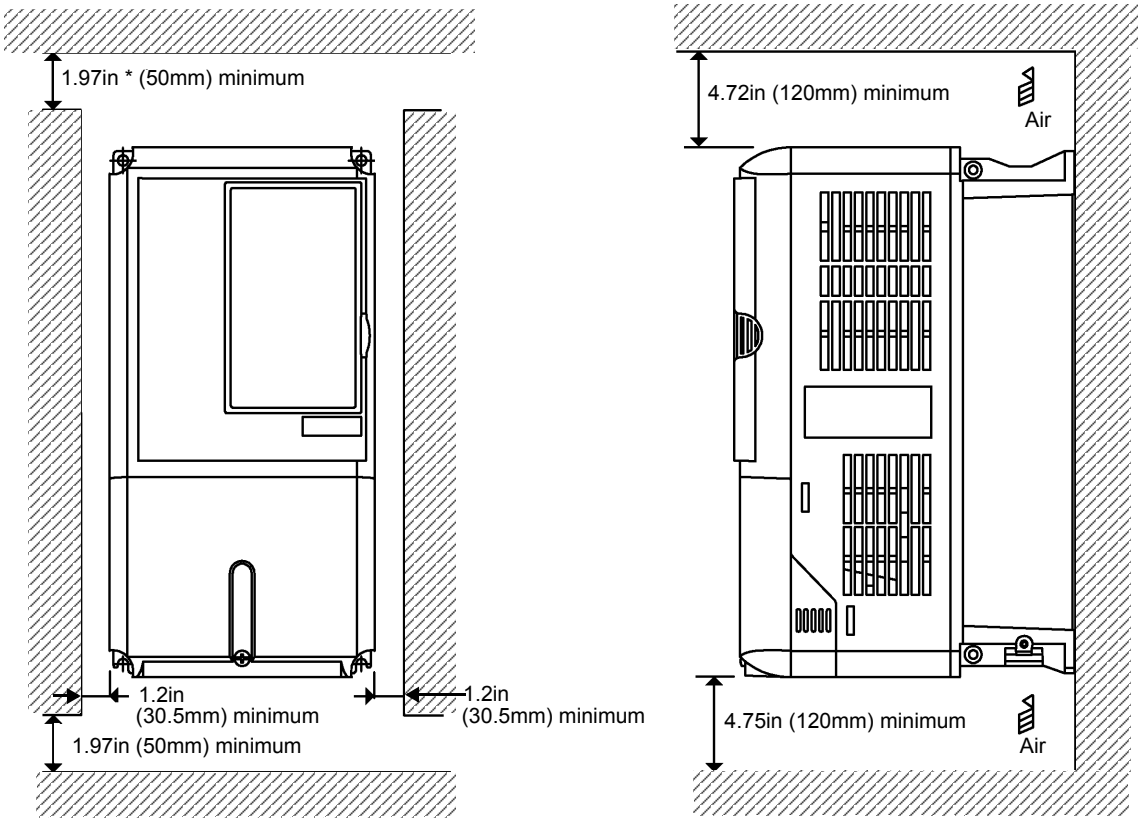

* For Drive model G7U4300, this clearance dimension is 11.81in (300mm) minimum. All other models require 1.97in (50mm) minimum.

Fig 1.8 Drive Installation Orientation and Space

IMPORTANT

1. The same space is required horizontally and vertically for both Open Chassis (IP00) and Enclosed Wall-mounted (IP20, NEMA 1 Type 1) Drives.
2. Always remove the protection covers before installing a 200-240 or 380-480 V Class Drive with an output of 15 kW or less in a panel.
   Always provide enough space for suspension eye bolts and the main circuit lines when installing a 200-240 or 380-480 V Class Drive with an output of 18.5 kW or more in a panel.

Removing and Attaching the Terminal Cover

Remove the terminal cover to wire cables to the control circuit and main circuit terminals.

◆ Removing the Terminal Cover

■ Models CIMR-G7U20P4 thru 2015 and 40P4 thru 4015

Loosen the screws at the bottom of the terminal cover, press in on the sides of the terminal cover in the directions of arrows 1, and then lift up on the terminal in the direction of arrow 2.

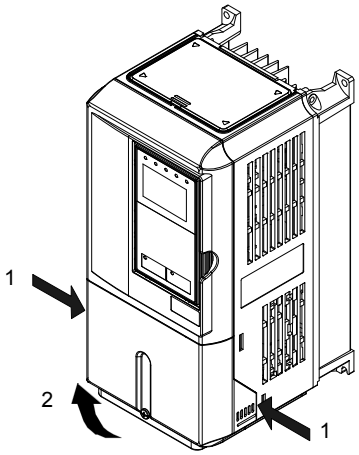

Fig 1.9 Removing the Terminal Cover (Model CIMR-G7U23P7 Shown Above)

■ Models CIMR-G7U2018 thru 2110 and 4018 thru 4300

Loosen the screws on the left and right at the top of the terminal cover, pull out the terminal cover in the direction of arrow 1 and then lift up on the terminal in the direction of arrow 2.

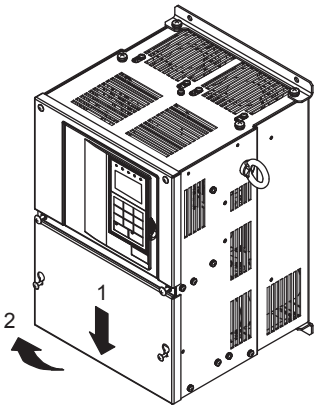

Fig 1.10 Removing the Terminal Cover (Model CIMR-G7U2018 Shown Above)

◆ Attaching the Terminal Cover

After wiring the terminal block, attach the terminal cover by reversing the removal procedure.

For Models CIMR-G7U2015/4015 and smaller, insert the tab on the top of the terminal cover into the groove on the Drive, and press in on the bottom of the terminal cover until it clicks into place.
For Drives CIMR-G7U2018/4018 and larger, insert the tab on the top of the terminal cover into the groove on the Drive, and secure the terminal cover by lifting it up toward the top of the Drive.

Removing/Attaching the Digital Operator and Front Cover

The methods of removing and attaching the Digital Operator and Front Cover are described in this section.

◆ Models CIMR-G7U20P4 thru 2015 and 40P4 thru 4015

To attach optional cards or change the terminal card connector, remove the Digital Operator and front cover in addition to the terminal cover. Always remove the Digital Operator from the front cover before removing the terminal cover.

The removal and attachment procedures are given below.

■Removing the Digital Operator

Press the lever on the side of the Digital Operator in the direction of arrow 1 to unlock the Digital Operator and lift the Digital Operator in the direction of arrow 2 to remove the Digital Operator as shown in the following illustration.

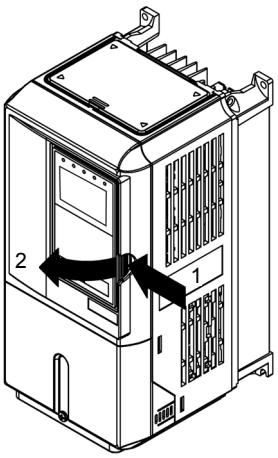

Fig 1.11 Removing the Digital Operator (Model CIMR-G7U43P7 Shown Above)

■Removing the Front Cover

Press the left and right sides of the front cover in the directions of arrows 1 and lift the bottom of the cover in the direction of arrow 2 to remove the front cover as shown in Fig. 1.12.

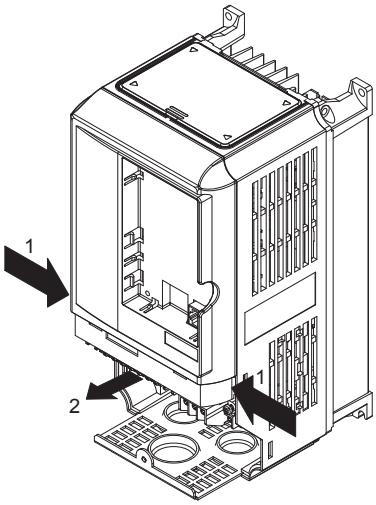

Fig 1.12 Removing the Front Cover (Model CIMR-G7U43P7 Shown Above)

■Mounting the Front Cover

After wiring the terminals, mount the front cover to the Drive by performing in reverse order to the steps to remove the front cover.

1. Do not mount the front cover with the Digital Operator attached to the front cover; otherwise, Digital Operator may malfunction due to improper mating with control board connector.
2. Insert the tab of the upper part of the front cover into the groove of the Drive and press the lower part of the front cover onto the Drive until the front cover snaps into place.

■Mounting the Digital Operator

After attaching the front cover, mount the Digital Operator onto theDrive using the following procedure.

1. Hook the Digital Operator at A (two locations) on the left side of the opening on the front cover in the direction of arrow 1 as shown in the following illustration.
2. Press the Digital Operator in the direction of arrow 2 until it snaps in place at B (two locations).

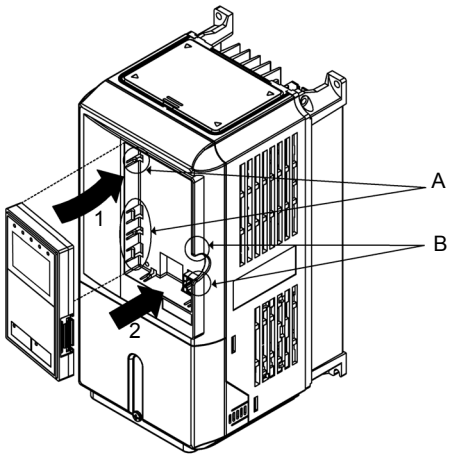

Fig 1.13 Mounting the Digital Operator

IMPORTANT

1. Do not remove or attach the Digital Operator or mount or remove the front cover using methods other than those described above, otherwise the Drive may break or malfunction due to imperfect contact.
2. Never attach the front cover to the Drive with the Digital Operator attached to the front cover. Imperfect contact can result.
   Always attach the front cover to the Drive by itself first, and then attach the Digital Operator to the front cover.

◆ Models CIMR-G7U2018 thru 2110 and 4018 thru 4300

For Drive models CIMR-G7U2018 thru 2110 and 4018 thru 4300, remove the terminal cover and then use the following procedures to remove the Digital Operator and main cover.

■Removing the Digital Operator

Use the same procedure as for Drives with an output of 18.5 kW or less.

■Removing the Front Cover

Loosen all screws on the front cover. Lift up at the location labelled 1 at the top of the control circuit terminal card and move in the direction of arrow 2.

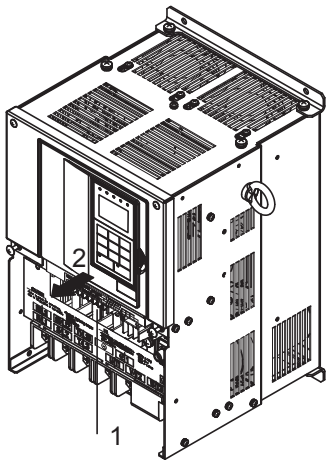

Fig 1.14 Removing the Front Cover (Model CIMR-G7U2018 Shown Above)

■ Attaching the Front Cover

Attach the front cover by reversing the procedure to remove it.

1. Confirm that the Digital Operator is not mounted on the front cover. If the cover is attached while the Digital Operator is mounted to it, the Digital Operator may malfunction due to improper mating with its connector.
2. Insert the tab on the top of the front cover into the slot on the Drive and press in on the cover until it clicks into place on the Drive.

■Attaching the Digital Operator

Use the same procedure as for Drives with an output of 18.5 kW or less.

2

Wiring

This chapter describes wiring terminals, main circuit terminal connections, main circuit terminal wiring specifications, control circuit terminals, and control circuit wiring specifications.

Connection Diagram 2-2
Terminal Block Configuration 2-4
Wiring Main Circuit Terminals 2-5
Wiring Control Circuit Terminals 2-22
Installing and Wiring Option Cards 2-31

Connection Diagram

The connection diagram of the Drive is shown in *Fig 2.1*.

When using the Digital Operator, the motor can be operated by wiring only the main circuits.

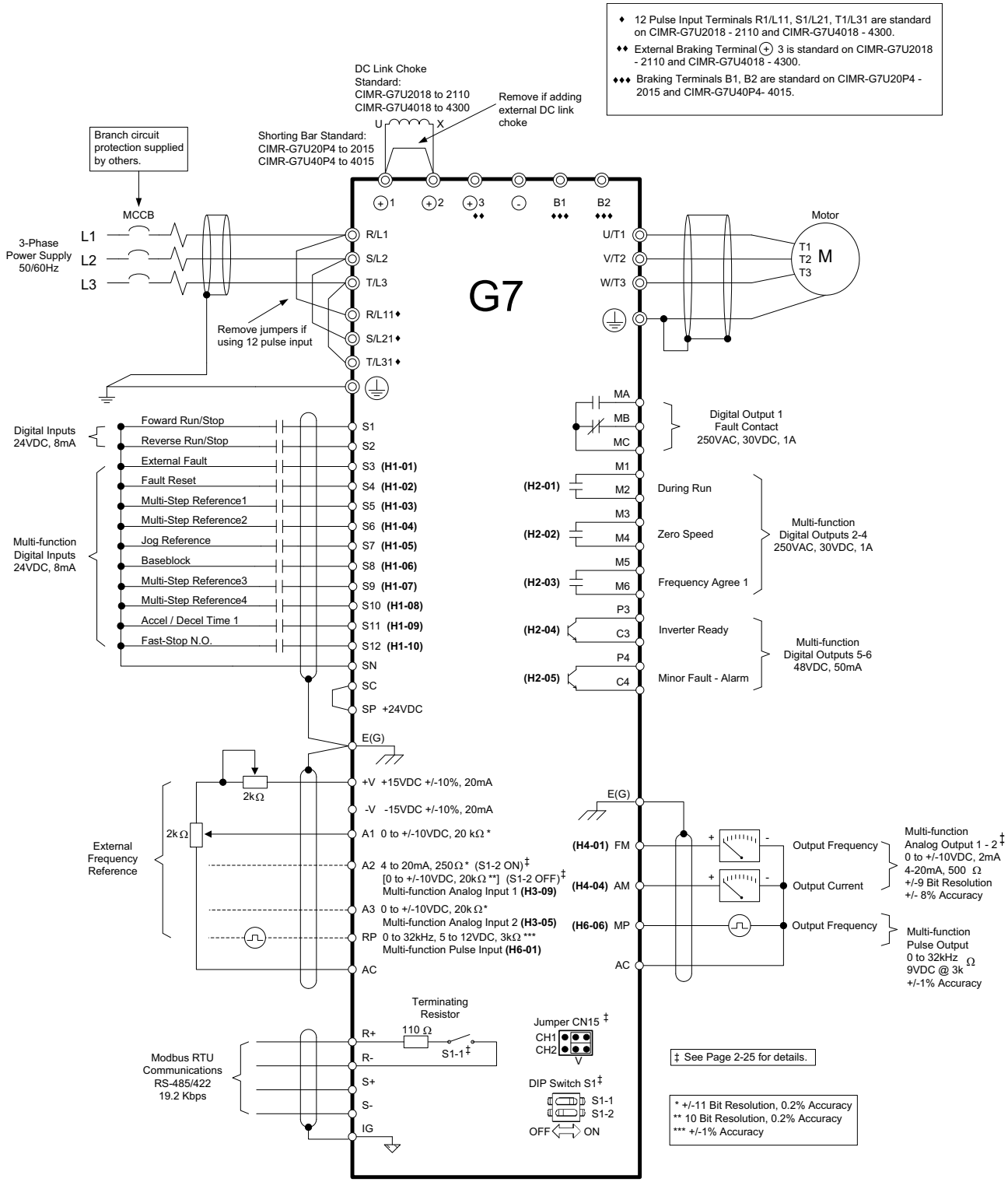

Fig 2.1 Connection Diagram (Model CIMR-G7U2018 Shown Above)

IMPORTANT

1. Control circuit terminals are arranged as shown below.

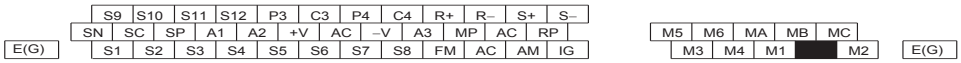

2. The output current capacity of the +V terminal is 20 mA.
3. Disable the stall prevention during deceleration (set parameter L3-04 to 0) when using a Braking Resistor Unit. If this user parameter is not changed to disable stall prevention, the system may not stop during deceleration.
4. Main circuit terminals are indicated with double circles and control circuit terminals are indicated with single circles.
5. The wiring for a motor with a cooling fan is not required for self-cooling motors.
6. PG circuit wiring (i.e., wiring to the PG-X2 Card) is not required for open-loop vector control.
7. Sequence input signals S1 to S12 are labeled for sequence connections (0 V common and sinking mode) for no-voltage contacts or NPN transistors. These are the default settings.
   For PNP transistor sequence connections (+24V common and sourcing mode) or to provide a 24-V external power supply, refer to *Table 2.13*.
8. The master speed frequency reference can set to input either a voltage (terminal A1) or current (terminal A2) by changing the setting of parameter H3-13. The default setting is for a voltage reference input.
9. The multi-function analog output is a dedicated meter output for an analog frequency meter, ammeter, voltmeter, wattmeter, etc. Do not use this output for feedback control or for any other control purpose.
10. DC reactors to improve the input power factor built into 200-240 V Class Drives for 18.5 to 110 kW and 380-480 V Class Drives for 18.5 to 300 kW. A DC reactor is thus an option only for Drives for 15 kW or less.
11. Set parameter L8-01 to 1 when using a breaking resistor (ERF). When using a Braking Resistor Unit, a shutoff sequence for the power supply must be made using a thermal relay trip.

Terminal Block Configuration

The terminal arrangement for 200-240 V Class Drives are shown in *Fig 2.2* and *Fig 2.3*.

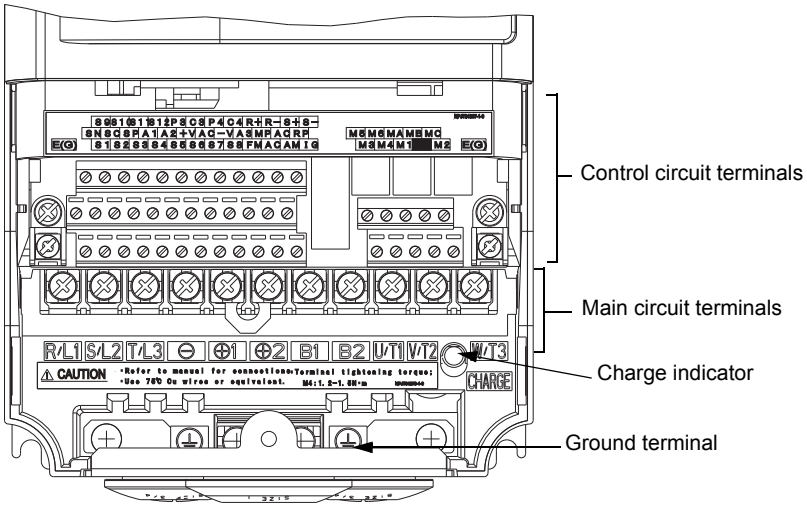

Fig 2.2 Terminal Arrangement (200-240 V Class Drive for 0.4 kW Shown Above)

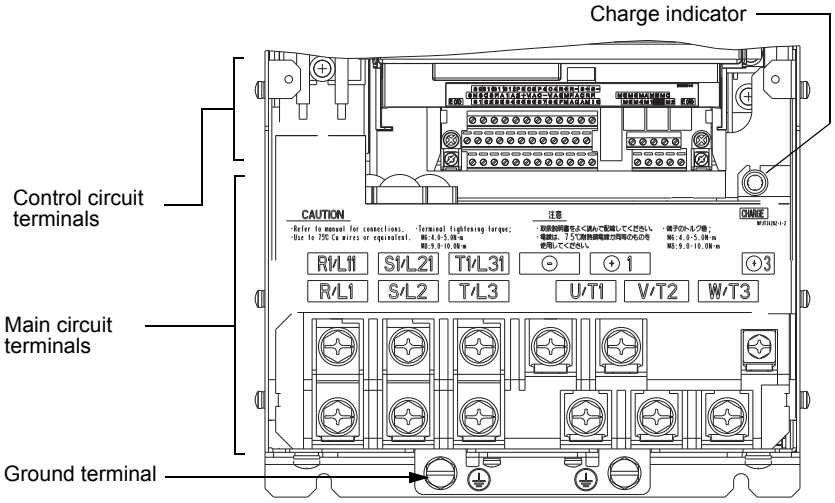

Fig 2.3 Terminal Arrangement (200-240 V Class Drive for 18.5 kW Shown Above)

Wiring Main Circuit Terminals

◆ Applicable Wire Sizes and Closed-loop Connectors

Select the appropriate wires and crimp terminals from *Table 2.1* to *Table 2.3*. Refer to instruction manual TOE-C726-2 for wire sizes for Braking Resistor Units and Braking Units.

Table 2.1 200-240 V Class Wire Sizes

Drive Model CIMR-□	Terminal Symbol	Terminal Screws	Clamping Torque lb•in(N•m)	Terminal Block Acceptable Wire Range AWG(mm^2)	Recommended Wire Size AWG (mm^2)	Wire Type
G7U20P4	R/L1, S/L2, T/L3, ⊖, ⊕1, ⊕2, B1, B2, U/T1, V/T2, W/T3	M4	10.6 to 13.2 (1.2 to 1.5)	18 to 10 (0.82 to 5.5)	14 (2)	Power cables, e.g., 600 V vinyl power cables
	⏚					
G7U20P7	R/L1, S/L2, T/L3, ⊖, ⊕1, ⊕2, B1, B2, U/T1, V/T2, W/T3	M4	10.6 to 13.2 (1.2 to 1.5)	18 to 10 (0.82 to 5.5)	14 (2)	
	⏚					
G7U21P5	R/L1, S/L2, T/L3, ⊖, ⊕1, ⊕2, B1, B2, U/T1, V/T2, W/T3	M4	10.6 to 13.2 (1.2 to 1.5)	18 to 10 (0.82 to 5.5)	14 (2)	
	⏚					
G7U22P2	R/L1, S/L2, T/L3, ⊖, ⊕1, ⊕2, B1, B2, U/T1, V/T2, W/T3	M4	10.6 to 13.2 (1.2 to 1.5)	18 to 10 (0.82 to 5.5)	12 (3.5)	
	⏚					
G7U23P7	R/L1, S/L2, T/L3, ⊖, ⊕1, ⊕2, B1, B2, U/T1, V/T2, W/T3	M4	10.6 to 13.2 (1.2 to 1.5)	18 to 10 (0.82 to 5.5)	10 (5.5)	
	⏚					
G7U25P5	R/L1, S/L2, T/L3, ⊖, ⊕1, ⊕2, B1, B2, U/T1, V/T2, W/T3	M5	20.4 to 22.1 (2.3 to 2.5)	10 to 6 (5.5 to 14)	8 (8)	
	⏚					
G7U27P5	R/L1, S/L2, T/L3, ⊖, ⊕1, ⊕2, B1, B2, U/T1, V/T2, W/T3	M5	20.4 to 22.1 (2.3 to 2.5)	10 to 6 (5.5 to 14)	6 (14)	
	⏚					
G7U2011	R/L1, S/L2, T/L3, ⊖, ⊕1, ⊕2, U/T1, V/T2, W/T3	M6	35.2 to 44 (4.0 to 5.0)	8 to 1 (8 to 50)	4 (22)	
	B1, B2	M5	20.4 to 22.1 (2.3 to 2.5)	12 to 6 (3.5 to 14)	Application Dependent	
	⏚	M6	35.2 to 44 (4.0 to 5.0)	*3	*3	
G7U2015	R/L1, S/L2, T/L3, ⊖, ⊕1, ⊕2, U/T1, V/T2, W/T3	M8	79.2 to 88 (9.0 to 10.0)	8 to 1 (8 to 50)	3 (30)	
	B1, B2	M5	20.4 to 22.1 (2.3 to 2.5)	12 to 6 (3.5 to 14)	Application Dependent	
	⏚	M6	35.2 to 44 (4.0 to 5.0)	*3	*3	
G7U2018	R/L1, S/L2, T/L3, ⊖, ⊕1, U/T1, V/T2, W/T3, R1/L11, S1/L21, T1/L31	M8	79.2 to 88 (9.0 to 10.0)	8 to 1/0 (8 to 60)	3 (30)	
	⊕3	M6	35.2 to 44 (4.0 to 5.0)	8 to 22 (8 to 4)	Application Dependent	
	⏚	M8	79.2 to 88 (9.0 to 10.0)	*3	*3	
G7U2022	R/L1, S/L2, T/L3, ⊖, ⊕1 U/T1, V/T2, W/T3, R1/L11, S1/L21, T1/L31	M8	79.2 to 88 (9.0 to 10.0)	8 to 1/0 (50 to 60)	1 (50)	
	⊕3	M6	35.2 to 44 (4.0 to 5.0)	8 to 22 (8 to 4)	Application Dependent	
	⏚	M8	79.2 to 88 (9.0 to 10.0)	*3	*3	
G7U2030	R/L1, S/L2, T/L3, ⊖, ⊕1 U/T1, V/T2, W/T3, R1/L11, S1/L21, T1/L31	M10	155 to 198 (17.6 to 22.5)	N/A	2/0 (60)	
	⊕3	M8	78 to 95 (8.8 to 10.8)		Application Dependent	
	⏚	M10	155 to 198 (17.6 to 22.5)		2 (30)	
	r/ℓ1, /ℓ2	M4	11.4 to 12.3 (1.3 to 1.4)		16 (1.25)	

Drive Model CIMR-□	Terminal Symbol	Terminal Screws	Clamping Torque lb•in(N•m)	Terminal Block Acceptable Wire Range AWG(mm^2)	Recommended Wire Size AWG (mm^2)	Wire Type
G7U2037	R/L1, S/L2, T/L3, ⊖, ⊕1 U/T1, V/T2, W/T3, R1/L11, S1/L21, T1/L31	M10	155 to 198 (17.6 to 22.5)		3/0 (80)	
	⊕3	M8	78 to 95 (8.8 to 10.8)		Application Dependent	
	⏚	M10	155 to 198 (17.6 to 22.5)		1 (38)	
	r/ℓ1, /ℓ2	M4	11.4 to 12.3 (1.3 to 1.4)		16 (1.25)	
G7U2045	R/L1, S/L2, T/L3, ⊖, ⊕1, U/T1, V/T2, W/T3, R1/L11, S1/L21, T1/L31	M10	155 to 198 (17.6 to 22.5)		1/0 × 2P (50 × 2P)	
	⊕3	M8	78 to 95 (8.8 to 10.8)		Application Dependent	
	⏚	M10	155 to 198 (17.6 to 22.5)		1/0 (50)	
	r/ℓ1, /ℓ2	M4	11.4 to 12.3 (1.3 to 1.4)		16 (1.25)	
G7U2055	⊖, ⊕1	M12	276 to 345 (31.4 to 39.2)		3/0 × 2P (80 × 2P)	
	R/L1, S/L2, T/L3, U/T1, V/T2, W/T3, R1/L11, S1/L21, T1/L31	M10	155 to 198 (17.6 to 22.5)		3/0 × 2P (80 × 2P)	
	⊕3	M8	78 to 95 (8.8 to 10.8)		Application Dependent	
	⏚	M12	155 to 198 (17.6 to 22.5)		2/0 (80)	
	r/ℓ1, /ℓ2	M4	11.4 to 12.3 (1.3 to 1.4)		16 (1.25)	
G7U2075	R/L1, S/L2, T/L3, ⊖, ⊕1	M12	276 to 345 (31.4 to 39.2)	N/A	250 × 2P (150 × 2P)	Power cables, e.g., 600 V vinyl power cables
	U/T1, V/T2, W/T3, R1/L11, S1/L21, T1/L31	M12	276 to 345 (31.4 to 39.2)		4/0 × 2P (100 × 2P)	
	⊕3	M8	78 to 95 (8.8 to 10.8)		Application Dependent	
	⏚	M12	276 to 345 (31.4 to 39.2)		2/0 × 2P (60 × 2P)	
	r/ℓ1, /ℓ2	M4	11.4 to 12.3 (1.3 to 1.4)		16 (1.25)	
G7U2090	R/L1, S/L2, T/L3, ⊖, ⊕1	M12	276 to 345 (31.4 to 39.2)		350 × 2P, or 1/0 × 4P (200 × 2P, or 50 × 4P)	
	U/T1, V/T2, W/T3, R1/L11, S1/L21, T1/L31	M12	276 to 345 (31.4 to 39.2)		300 × 2P, or 1/0 × 4P (150 × 2P, or 50 × 4P)	
	⊕3	M8	78 to 95 (8.8 to 10.8)		Application Dependent	
	⏚	M12	276 to 345 (31.4 to 39.2)		300 × 2P (150 × 2P)	
	r/ℓ1, /ℓ2	M4	11.4 to 12.3 (1.3 to 1.4)		16 (1.25)	
G7U2110	R/L1, S/L2, T/L3, ⊖, ⊕1	M12	276 to 345 (31.4 to 39.2)		350 × 2P, or 1/0 × 4P (200 × 2P, or 50 × 4P)	
	U/T1, V/T2, W/T3, R1/L11, S1/L21, T1/L31	M12	276 to 345 (31.4 to 39.2)		300 × 2P, or 1/0 × 4P (150 × 2P, or 50 × 4P)	
	⊕3	M8	78 to 95 (8.8 to 10.8)	N/A	Application Dependent	
	⏚	M12	276 to 345 (31.4 to 39.2)	N/A	300 × 2P (150 × 2P)	
	r/ℓ1, /ℓ2	M4	11.4 to 12.3 (1.3 to 1.4)	N/A	16 (1.25)	

* The wire thickness is set for copper wires at 75°C

Table 2.2 380-480 V Class Wire Sizes

Drive Model CIMR-□	Terminal Symbol	Terminal Screws	Tightening Torque (N•m)	Possible Wire Sizes mm^2 (AWG)	Recommended Wire Size mm^2 (AWG)	Wire Type
G7U40P4	R/L1, S/L2, T/L3, ⊖, ⊕1, ⊕2, B1, B2, U/T1, V/T2, W/T3	M4	10.6 to 13.2 (1.2 to 1.5)	18 to 10 (0.82 to 5.5)	14 (2)	Power cables, e.g., 600 V vinyl power cables
	⏚					
G7U40P7	R/L1, S/L2, T/L3, ⊖, ⊕1, ⊕2, B1, B2, U/T1, V/T2, W/T3	M4	10.6 to 13.2 (1.2 to 1.5)	18 to 10 (0.82 to 5.5)	14 (2)	
	⏚					
G7U41P5	R/L1, S/L2, T/L3, ⊖, ⊕1, ⊕2, B1, B2, U/T1, V/T2, W/T3	M4	10.6 to 13.2 (1.2 to 1.5)	18 to 10 (0.82 to 5.5)	14 (2)	
	⏚					
G7U42P2	R/L1, S/L2, T/L3, ⊖, ⊕1, ⊕2, B1, B2, U/T1, V/T2, W/T3	M4	10.6 to 13.2 (1.2 to 1.5)	18 to 10 (0.82 to 5.5)	12 (3.5)	
	⏚				14 (2)	
G7U43P7	R/L1, S/L2, T/L3, ⊖, ⊕1, ⊕2, B1, B2, U/T1, V/T2, W/T3	M4	10.6 to 13.2 (1.2 to 1.5)	18 to 10 (0.82 to 5.5)	12 (3.5)	
	⏚					
G7U44P0	R/L1, S/L2, T/L3, ⊖, ⊕1, ⊕2, B1, B2, U/T1, V/T2, W/T3	M4	10.6 to 13.2 (1.2 to 1.5)	18 to 10 (0.82 to 5.5)	12 (3.5)	
	⏚					
G7U45P5	R/L1, S/L2, T/L3, ⊖, ⊕1, ⊕2, B1, B2, U/T1, V/T2, W/T3	M4	10.6 to 13.2 (1.2 to 1.5)	10 to 6 (5.5 to 14)	10 (5.5)	
	⏚					
G7U47P5	R/L1, S/L2, T/L3, ⊖, ⊕1, ⊕2, B1, B2, U/T1, V/T2, W/T3	M5	20.4 to 22.1 (2.3 to 2.5)	10 to 6 (5.5 to 14)	8 (8)	
	⏚					
G7U4011	R/L1, S/L2, T/L3, ⊖, ⊕1, ⊕2, B1, B2, U/T1, V/T2, W/T3	M5	20.4 to 22.1 (2.3 to 2.5)	10 to 6 (5.5 to 14)	8 (8)	
	⏚	M5 (M6)	20.4 to 22.1 (2.3 to 2.5) 35.2 to 44 (4.0 to 5.0)	10 to 6 (5.5 to 14)	10 (5.5)	
G7U4015	R/L1, S/L2, T/L3, ⊖, ⊕1, ⊕2, U/T1, V/T2, W/T3	M5	35.2 to 44 (4.0 to 5.0)	10 to 6 (5.5 to 14)	8 (8)	
	B1, B2	M5	20.4 to 22.1 (2.3 to 2.5)	10 to 6 (5.5 to 14)	8 (8)	
	⏚	M5 (M6)	35.2 to 44 (4.0 to 5.0)	10 to 6 (5.5 to 14)	8 (8)	
G7U4018	R/L1, S/L2, T/L3, ⊖, ⊕1, ⊕3, U/T1, V/T2, W/T3, R1/L11, S1/L21, T1/L31	M6	35.2 to 44 (4.0 to 5.0)	12 to 3 (3.5 to 30)	6 (14)	
	⏚	M8	79.2 to 88 (9.0 to 10.0)	*3	*3	
G7U4022	R/L1, S/L2, T/L3, ⊖, ⊕1, ⊕3, U/T1, V/T2, W/T3, R1/L11, S1/L21, T1/L31	M6	35.2 to 44 (4.0 to 5.0)	12 to 3 (3.5 to 30)	4 (22)	
	⏚	M8	79.2 to 88 (9.0 to 10.0)	*3	*3	

Drive Model CIMR-□	Terminal Symbol	Terminal Screws	Tightening Torque (N•m)	Possible Wire Sizes mm^2 (AWG)	Recommended Wire Size mm^2 (AWG)	Wire Type
G7U4030	R/L1, S/L2, T/L3, ⊖, ⊕1, U/T1, V/T2, W/T3, R1/L11, S1/L21, T1/L31	M8	79.2 to 88 (9.0 to 10.0)	8 to 1/0 (8 to 60)	2 (38)	Power cables, e.g., 600 V vinyl power cables
	⊕3	M6	35.2 to 44 (4.0 to 5.0)	(8 to 4) 8 to 22	Application Dependent	
	⏚	M8	79.2 to 88 (9.0 to 10.0)	*3	*3	
G7U4037	R/L1, S/L2, T/L3, ⊖, ⊕1, U/T1, V/T2, W/T3, R1/L11, S1/L21, T1/L31	M8	79.2 to 88 (9.0 to 10.0)	2 to 1/0 (30 to 60)	2 (38)	
G7U4045	R/L1, S/L2, T/L3, ⊖, ⊕1, U/T1, V/T2, W/T3, R1/L11, S1/L21, T1/L31	M8	79.2 to 88 (9.0 to 10.0)	8 to 1/0 (8 to 60)	1 (50)	
	⊕3	M6	35.2 to 44 (4.0 to 5.0)	8 to 4 (8 to 22)	Application Dependent	
	⏚	M8	79.2 to 88 (9.0 to 10.0)	*3	*3	
G7U4055	R/L1, S/L2, T/L3, ⊖, ⊕1, U/T1, V/T2, W/T3, R1/L11, S1/L21, T1/L31	M10	154.8 to 197.5 (17.6 to 22.5)	N/A	1/0 (50)	
	⊕3	M8	78 to 95 (8.8 to 10.8)		Application Dependent	
	⏚	M10	154.8 to 197.5 (17.6 to 22.5)		2 (38)	
	r/ℓ1, 200/ℓ2200, 400/ℓ2400	M4	11.4 to 12.3 (1.3 to 1.4)		16 (1.25)	
G7U4075	R/L1, S/L2, T/L3, ⊖, ⊕1, U/T1, V/T2, W/T3, R1/L11, S1/L21, T1/L31	M10	154.8 to 197.5 (17.6 to 22.5)		4/0 (100)	
	⊕3	M8	78 to 95 (8.8 to 10.8)		Application Dependent	
	⏚	M10	154.8 to 197.5 (17.6 to 22.5)		1 (50)	
	r/ℓ1, 200/ℓ2200, 400/ℓ2400	M4	11.4 to 12.3 (1.3 to 1.4)		16 (1.25)	
G7U4090	R/L1, S/L2, T/L3, ⊖, ⊕1, U/T1, V/T2, W/T3, R1/L11, S1/L21, T1/L33	M10	154.8 to 197.5 (17.6 to 22.5)		1/0 × 2P (50 × 2P)	
	⊕3	M8	78 to 95 (8.8 to 10.8)		Application Dependent	
	⏚	M12	154.8 to 197.5 (17.6 to 22.5)		2/0 (60)	
	r/ℓ1, 200/ℓ2200, 400/ℓ2400	M4	11.4 to 12.3 (1.3 to 1.4)		16 (1.25)	
G7U4110	R/L1, S/L2, T/L3, ⊖, ⊕1, U/T1, V/T2, W/T3, R1/L11, S1/L21, T1/L33	M10	154.8 to 197.5 (17.6 to 22.5)		3/0 × 2P (80 × 2P)	
	⊕3	M8	78 to 95 (8.8 to 10.8)		Application Dependent	
	⏚	M12	154.8 to 197.5 (17.6 to 22.5)		4/0 (100)	
	r/ℓ1, 200/ℓ2200, 400/ℓ2400	M4	11.4 to 12.3 (1.3 to 1.4)		16 (1.25)	
G7U4132	R/L1, S/L2, T/L3, ⊖, ⊕1, U/T1, V/T2, W/T3, R1/L11, S1/L21, T1/L31	M12	276 to 345 (31.4 to 39.2)		3/0 × 2P (80 × 2P)	
	⊕3	M8	78 to 95 (8.8 to 10.8)		Application Dependent	
	⏚	M12	276 to 345 (31.4 to 39.2)		1/0 × 2P (50 × 2P)	
	r/ℓ1, 200/ℓ2200, 400/ℓ2400	M4	11.4 to 12.3 (1.3 to 1.4)		16 (1.25)	

Drive Model CIMR-□	Terminal Symbol	Terminal Screws	Tightening Torque (N•m)	Possible Wire Sizes mm^2 (AWG)	Recommended Wire Size mm^2 (AWG)	Wire Type
G7U4160	R/L1, S/L2, T/L3, ⊖, ⊕1, U/T1, V/T2, W/T3, R1/L11, S1/L21, T1/L31	M12	276 to 345 (31.4 to 39.2)	N/A	4/0 × 2P (100 × 2P)	Power cables, e.g., 600 V vinyl power cables
	⊕3	M8	78 to 95 (8.8 to 10.8)		Application Dependent	
	⏚	M12	276 to 345 (31.4 to 39.2)		1/0 × 2P (50 × 2P)	
	r/ℓ1, 200/ℓ2200, 400/ℓ2400	M4	11.4 to 12.3 (1.3 to 1.4)		16 (1.25)	
G7U4185	R/L1, S/L2, T/L3, R1/L11, S1/L21, T1/L31	M16	694 to 867 (78.4 to 98.0)		250 x 2P (125 x 2P)	
	U/T1, V/T2, W/T3				250 x 2P (125 x 2P)	
	⊖, ⊕1				600 x 2P (325 x 2P)	
	⊕3				Application Dependent	
	⏚				3/0 x 2P (80 x 2P)	
	r/ℓ1, 200/ℓ2200, 400/ℓ2400	M4	11.4 to 12.3 (1.3 to 1.4)		16 (1.25)	
G7U4220	R/L1, S/L2, T/L3, R1/L11, S1/L21, T1/L31	M16	694 to 867 (78.4 to 98.0)		350 x 2P (185 x 2P)	
	U/T1, V/T2, W/T3				300 x 2P (150 x 2P)	
	⊖, ⊕1				250 x 4P (125 x 4P)	
	⊕3				Application Dependent	
	⏚				4/0 x 2P (100 x 2P)	
	r/ℓ1, 200/ℓ2200, 400/ℓ2400	M4	11.4 to 12.3 (1.3 to 1.4)		16 (1.25)	
G7U4300	R/L1, S/L2, T/L3, R1/L11, S1/L21, T1/L31	M16	694 to 867 (78.4 to 98.0)		600 x 2P (325 x 2P)	
	U/T1, V/T2, W/T3				500 x 2P (300 x 2P)	
	⊖, ⊕1				400 x 4P (200 x 4P)	
	⊕3				Application Dependent	
	⏚				250 x 2P (125 x 2P)	
	r/ℓ1, 200/ℓ2200, 400/ℓ2400	M4	11.4 to 12.3 (1.3 to 1.4)		16 (1.25)	

* The wire thickness is set for copper wires at 75°C.

*1 Wire size range provided for Drives using insulated screw-type terminal blocks with a single conductor. Refer to applicable codes for proper wire type and size.

*2 Recommended wire sizes are based on the Drive current ratings and NEC Article 310 Table 310.16, 75 Degree Celsius copper or equivalent.

*3 Uses non-insulated screw-type terminals. Refer to applicable codes for proper wire type and size.

IMPORTANT

Determine the wire size for the main circuit so that line voltage drop is within 2% of the rated voltage. Line voltage drop is calculated as follows:

Line voltage drop (V) = $\sqrt{3}$ x wire resistance (Ω/km) x wire length (m) x current (A) x 10^{-3}

Table 2.3 Closed-loop Connector Sizes (JIS C2805) (200-240 V Class and 380-480 V Class)

Wire Size *		Terminal Screw	Ring Tongue (R-Type) Closed-Loop Connectors (Lugs) JST Corporation Part Numbers **
AWG	mm^2		
20	0.5	M3.5	1.25 - 3.7
		M4	1.25 - 4
18	0.75	M3.5	1.25 - 3.7
		M4	1.25 - 4
16	1.25	M3.5	1.25 - 3.7
		M4	1.25 - 4
14	2	M3.5	2 - 3.7
		M4	2 - 4
		M5	2 - 5
		M6	2 - 6
		M8	2 - 8
12 / 10	3.5 / 5.5	M4	5.5 - 4
		M5	5.5 - 5
		M6	5.5 - 6
		M8	5.5 - 8
8	8	M5	8 - 5
		M6	8 - 6
		M8	8 - 8
6	14	M5	14 - 5
		M6	14 - 6
		M8	14 - 8
4	22	M5	22 - 5
		M6	22 - 6
		M8	22 - 8
3 / 2	30 / 38	M6	38 - 6
		M8	38 - 8
1 / 1/0	50 / 60	M8	60 - 8
		M10	60 - 10
2/0	70	M8	70 - 8
		M10	70 - 10
3/0	80	M10	80 - 10
		M16	80 - 16

Wire Size *		Terminal Screw	Ring Tongue (R-Type) Closed-Loop Connectors (Lugs) JST Corporation Part Numbers **
4/0	100	M10	100 - 10
		M12	100 - 12
		M16	100 - 16
250 / 300MCM	125 / 150	M10	150 - 10
		M12	150 - 12
		M16	150 - 16
400MCM	200	M12	200 - 12
650MCM	325	M12 x 2	325 - 12
		M16	325 - 16

* Wire sizes are based on 75 degrees Celsius copper wire.
** Equivalent connector can be used.

IMPORTANT

Determine the wire size for the main circuit so that line voltage drop is within 2% of the rated voltage. Line voltage drop is calculated as follows:

Line voltage drop (V) = $\sqrt{3}$ x wire resistance (W/km) x wire length (m) x current (A) x 10^{-3}

◆ Main Circuit Terminal Functions

Main circuit terminal functions are summarized according to terminal symbols in *Table 2.4*. Wire the terminals correctly for the desired purposes.

Table 2.4 Main Circuit Terminal Functions (200-240 V Class and 380-480 V Class)

Purpose	Terminal Symbol	Model: CIMR-G7U□	
		208-240 Vac	480 Vac
Main circuit power input	R/L1, S/L2, T/L3	20P4 to 2110	40P4 to 4300
	R1/L11, S1/L21, T1/L31	2018 to 2110	4018 to 4300
Drive outputs	U/T1, V/T2, W/T3	20P4 to 2110	40P4 to 4300
DC power input	⊕1, ⊖	20P4 to 2110	40P4 to 4300
Braking Resistor Unit connection	B1, B2	20P4 to 27P5	40P4 to 4015
DC link choke connection	⊕1, ⊕2	20P4 to 2015	40P4 to 4015
Braking Transistor Unit connection	⊕3, ⊖	2018 to 2110	4018 to 4300
Ground	⏚	20P4 to 2110	40P4 to 4300

◆ Main Circuit Configurations

The main circuit configurations of the Drive are shown in *Table 2.5*.

Table 2.5 Drive Main Circuit Configurations

208-240 Vac	480 Vac
CIMR-G7U20P4 to 2015 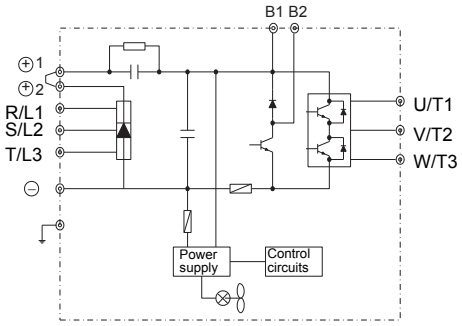	CIMR-G7U40P4 to 4015 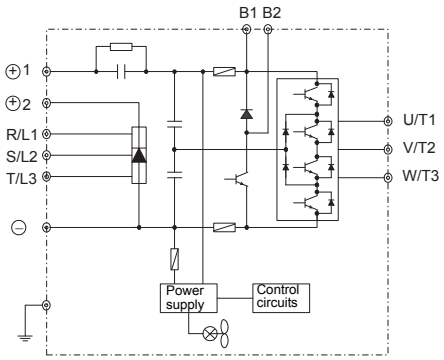
CIMR-G7U2018, 2022 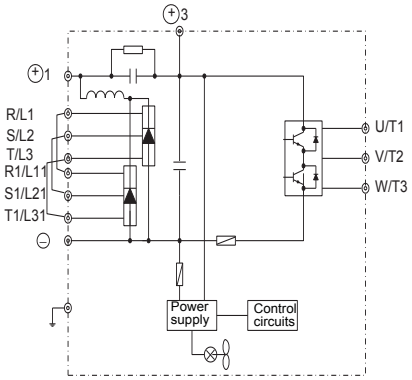	CIMR-G7U4018 to 4045 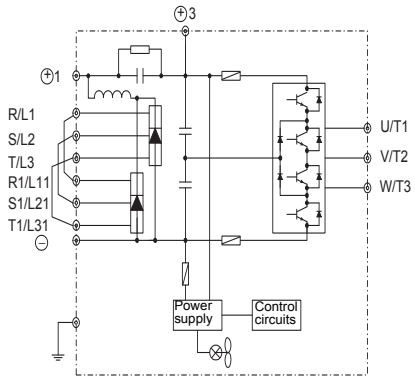
CIMR-G7U2030 to 2110 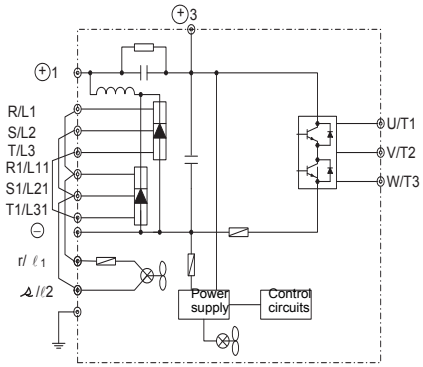	CIMR-G7U4055 to 4300 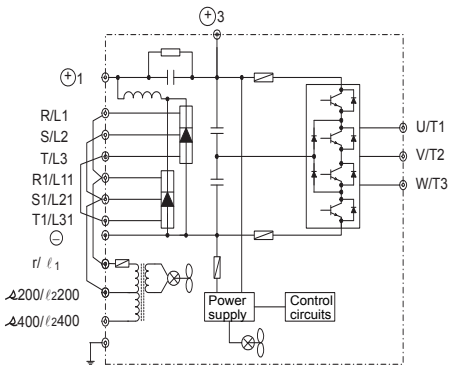

Note Consult your Yaskawa representative before using 12-phase rectification.

◆ Standard Connection Diagrams

Standard Drive connection diagrams are shown in *Fig 2.4.* These are the same for both 208-240 Vac and 480 Vac Drives. The connections depend on the Drive capacity.

■CIMR-G7U20P4 to 2015 and 40P4 to 4015

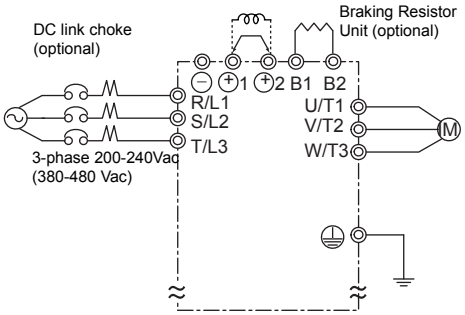

Be sure to remove the short-circuit bar before connecting the DC link choke.

■CIMR-G7U2018, 2022, and 4018 to 4045

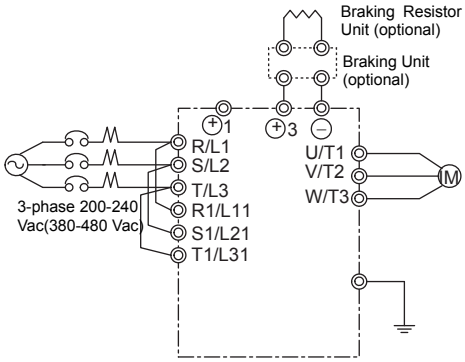

The DC link choke is built in.

■CIMR-G7U2030 to 2110

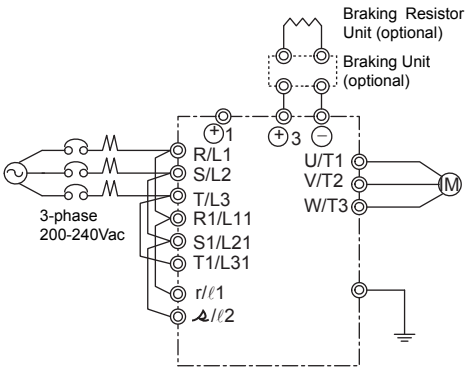

■CIMR-G7U4055 to 4300

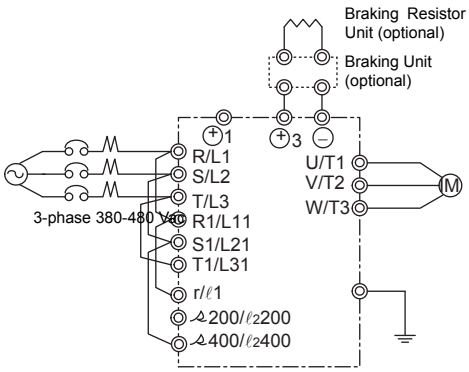

Control power is supplied internally from the main circuit DC power supply for all Drive models.

Fig 2.4 Main Circuit Terminal Connections

◆ Wiring the Main Circuits

This section describes wiring connections for the main circuit inputs and outputs.

■Wiring Main Circuit Inputs

Observe the following precautions for the main circuit power supply input.

Installing a Molded-case Circuit Breaker

Always connect the power input terminals (R/L1, S/L2, and T/L3) and power supply via a molded-case circuit breaker (MCCB) suitable for the Drive.

- Choose an MCCB with a capacity of 1.5 to 2 times the Drive's rated current.
- For the MCCB's time characteristics, be sure to consider the Drive's overload protection (one minute at 150% of the rated output current).
- If the same MCCB is to be used for more than one Drive, or other devices, set up a sequence so that the power supply will be turned OFF by a fault output, as shown in *Fig 2.5*.

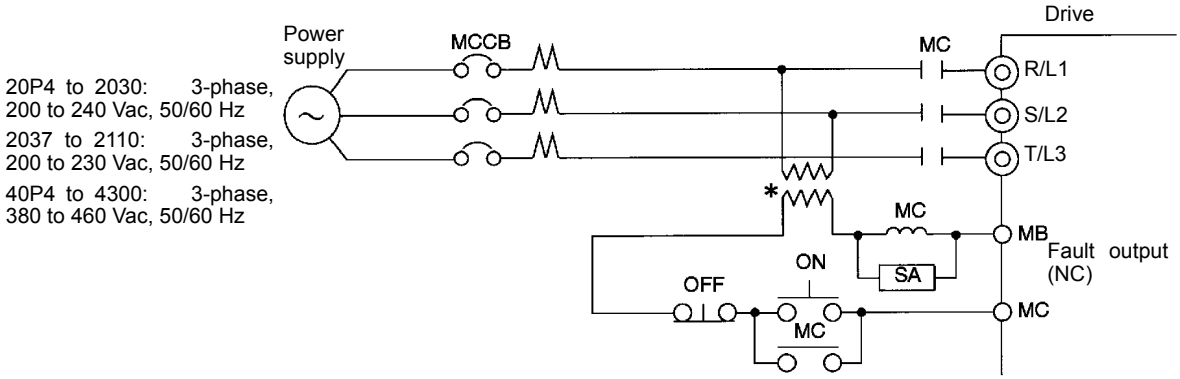

* For 380-480 V class Drives, connect a 460/230 V transformer.

Fig 2.5 MCCB Installation

Installing a Ground Fault Interrupter

Drive outputs use high-speed switching, so high-frequency leakage current is generated. Therefore, at the Drive primary side, use a ground fault interrupter to detect only the leakage current in the frequency range that is hazardous to humans and exclude high-frequency leakage current.

- For the special-purpose ground fault interrupter for Drives, choose a ground fault interrupter with a sensitivity amperage of at least 30 mA per Drive.
- When using a general ground fault interrupter, choose a ground fault interrupter with a sensitivity amperage of 200 mA or more per Drive and with an operating time of 0.1 s or more.

Installing a Magnetic Contactor

If the power supply for the main circuit is to be shut off during a sequence, a magnetic contactor can be used.

When a magnetic contactor is installed on the primary side of the main circuit to forcibly stop the Drive, however, the regenerative braking does not work and the Drive will coast to a stop.

- The Drive can be started and stopped by opening and closing the magnetic contactor on the primary side. Frequently opening and closing the magnetic contactor, however, may cause the Drive to break down. Start and stop the Drive at most once every 30 minutes.
- When the Drive is operated with the Digital Operator, automatic operation cannot be performed after recovery from a power interruption.
- If the Braking Resistor Unit is used, program the sequence so that the magnetic contactor is turned OFF by the contact of the Unit's thermal overload relay.

Connecting Input Power Supply to the Terminal Block

Input power supply can be connected to any terminal R/L1, S/L2, or T/L3 on the terminal block; the phase sequence of input power supply is irrelevant to the phase sequence.

Installing an AC Reactor

If the Drive is connected to a large-capacity power transformer (600 kVa or more) or the phase advancing capacitor is switched, an excessive peak current may flow through the input power circuit, causing the converter unit to break down.

To prevent this, install an optional AC Reactor on the input side of the Drive or a DC link choke to the DC link choke connection terminals.

This also improves the power factor on the power supply side.

Installing a Surge Absorber

Always use a surge absorber or diode for inductive loads near the Drive. These inductive loads include magnetic contactors, electromagnetic relays, solenoid valves, solenoids, and magnetic brakes.

Installing a Noise Filter on Power Supply Side

Install a noise filter to eliminate noise transmitted between the power line and the Drive.

- Correct Noise Filter Installation

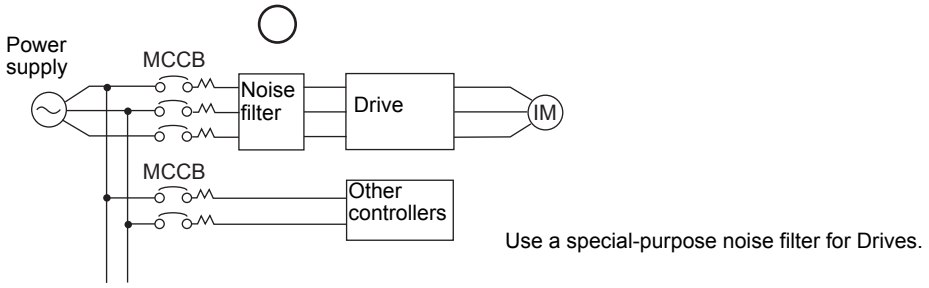

Fig 2.6 Correct Power supply Noise Filter Installation

- Incorrect Noise Filter Installation

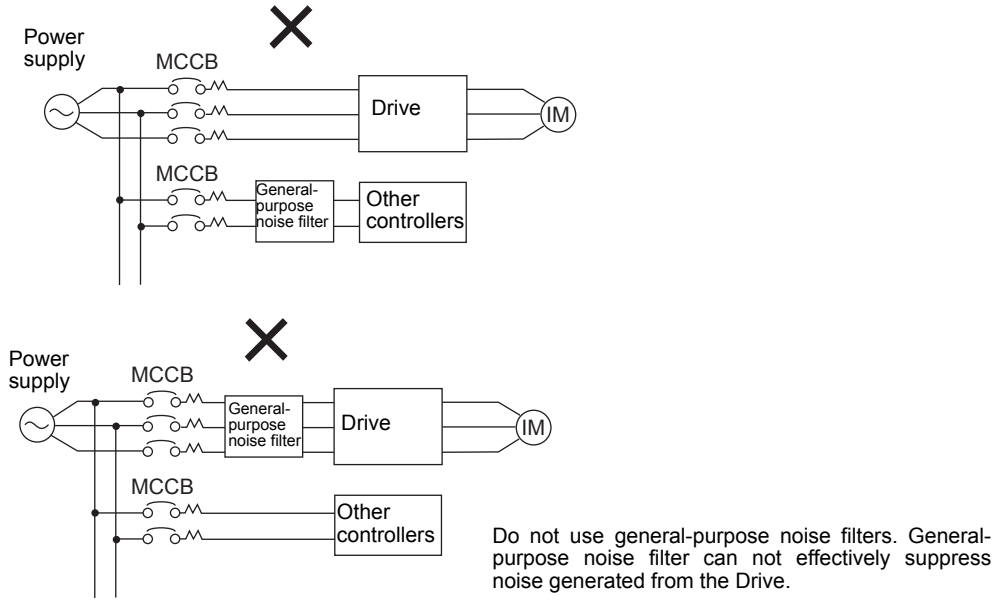

Fig 2.7 Incorrect Power supply Noise Filter Installation

■Wiring the Output Side of Main Circuit

Observe the following precautions when wiring the main output circuits.

Connecting the Drive and Motor

Connect output terminals U/T1, V/T2, and W/T3 to motor lead wires U/T1, V/T2, and W/T3, respectively. Check that the motor rotates forward with the forward run command. Switch over any two of the output terminals to each other and reconnect if the motor rotates in reverse with the forward run command.

Never Connect a Power Supply to Output Terminals

Never connect a power supply to output terminals U/T1, V/T2, and W/T3. If voltage is applied to the output terminals, the internal circuits of the Drive will be damaged.

Never Short or Ground Output Terminals

If the output terminals are touched with bare hands or the output wires come into contact with the Drive casing, an electric shock or grounding will occur. This is extremely hazardous. Do not short the output wires.

Do Not Use a Phase Advancing Capacitor or Noise Filter

Never connect a phase advancing capacitor or LC/RC noise filter to an output circuit. The high-frequency components of the Drive output may result in overheating or damage to these part or may result in damage to the Drive or cause other parts to burn.

Do Not Use an Electromagnetic Switch

Never connect an electromagnetic switch (MC) between the Drive and motor and turn it ON or OFF during operation. If the MC is turned ON while the Drive is operating, a large inrush current will be created and the overcurrent protection in the Drive will operate.

When using an MC to switch to a commercial power supply, stop the Drive and motor before operating the MC. Use the speed search function if the MC is operated during operation. If measures for momentary power interrupts are required, use a delayed release MC.

Installing a Thermal Overload Relay

This Drive has an electronic thermal protection function to protect the motor from overheating. If, however, more than one motor is operated with one Drive or a multi-pole motor is used, always install a thermal relay (THR) between the Drive and the motor and set L1-01 to 0 (no motor protection). The sequence should be designed so that the contacts of the thermal overload relay turn OFF the magnetic contactor on the main circuit inputs.

Installing a Noise Filter on Output Side

Connect a noise filter to the output side of the Drive to reduce radio noise and inductive noise.

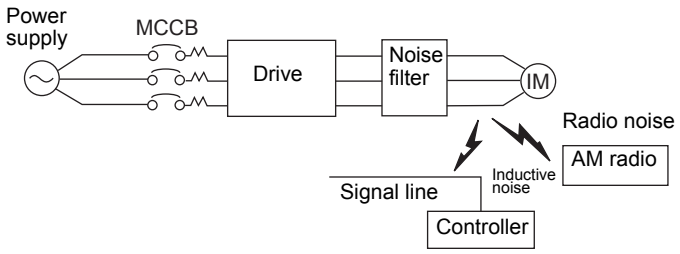

Inductive Noise: Electromagnetic induction generates noise on the signal line, causing the controller to malfunction.

Radio Noise: Electromagnetic waves from the Drive and cables cause the broadcasting radio receiver to make noise.

Fig 2.8 Installing a Noise Filter on the Output Side

Countermeasures Against Inductive Noise

As described previously, a noise filter can be used to prevent inductive noise from being generated on the output side. Alternatively, cables can be routed through a grounded metal pipe to prevent inductive noise. Keeping the metal pipe at least 30 cm (approximately 1 foot) away from the signal line considerably reduces inductive noise.

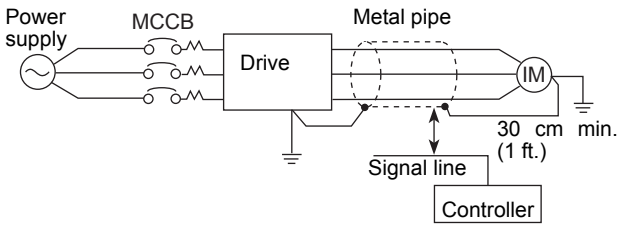

Fig 2.9 Countermeasures Against Inductive Noise

Countermeasures Against Radio Interference

Radio noise is generated from the Drive as well as from the input and output lines. To reduce radio noise, install noise filters on both input and output sides, and also install the Drive in a totally enclosed steel box.

The cable between the Drive and the motor should be as short as possible.

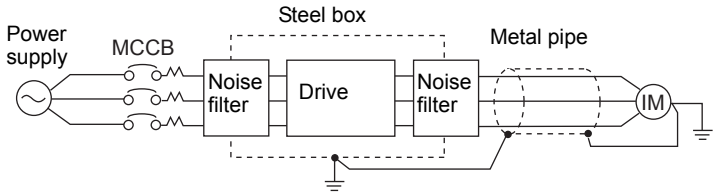

Fig 2.10 Countermeasures Against Radio Interference

Cable Length between Drive and Motor

If the cable between the Drive and the motor is long, the high-frequency leakage current will increase, causing the Drive output current to increase as well. This may affect peripheral devices. To prevent this, adjust the carrier frequency (set in C6-01, C6-02) as shown in *Table 2.6*. (For details, refer to *Chapter 3 User Parameters*.)

Table 2.6 Cable Length between Drive and Motor

Cable length	50 m max. (164 ft)	100 m max. (328 ft)	More than 100 m (> 328 ft)
Carrier frequency	15 kHz max.	10 kHz max.	5 kHz max.

■Ground Wiring

Observe the following precautions when wiring the ground line.

- Always use the ground terminal of the 200-240 V Drive with a ground resistance of less than 100 Ω and that of the 380-480 V Drive with a ground resistance of less than 10 Ω.
- Do not share the ground wire with other devices, such as welding machines or power tools.
- Always use a ground wire that complies with technical standards on electrical equipment and minimize the length of the ground wire.
  Leakage current flows through the Drive. Therefore, if the distance between the ground electrode and the ground terminal is too long, potential on the ground terminal of the Drive will become unstable.
- When using more than one Drive, be careful not to loop the ground wire.

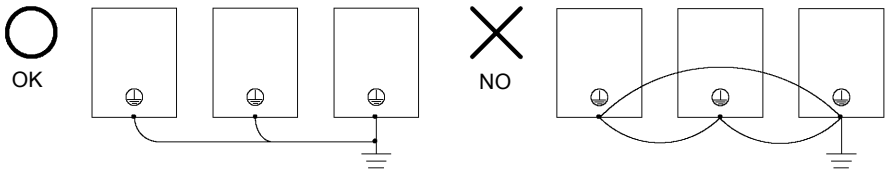

Fig 2.11 Ground Wiring

■Connecting the Braking Resistor (ERF)

A Braking Resistor that mounts to the Drive can be used with 200-240 V and 380-480 V Class Drives with outputs from 0.4 to 3.7 kW.

Connect the braking resistor as shown in *Fig 2.12*.

Table 2.7

L8-01 (Protect selection for internal DB resistor)	1 (Enables overheat protection)
L3-04 (Stall prevention selection during deceleration) (Select either one of them.)	0 (Disables stall prevention function)
	3 (Enables stall prevention function with braking resistor)

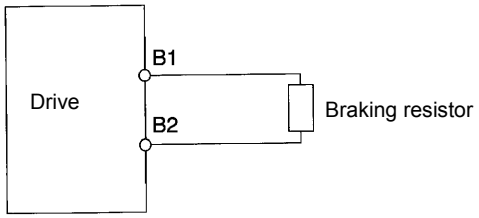

Fig 2.12 Connecting the Braking Resistor

IMPORTANT

The braking resistor connection terminals are B1 and B2. Do not connect to any other terminals. Connecting to any terminals other than B1 or B2 can cause the resistor to overheat, resulting in damage to the equipment.

■Connecting the Braking Resistor Unit (LKEB) and Braking Unit (CDBR)

Use the following settings when using a Braking Resistor Unit. Refer to *User Parameters* on page 10-18 for connection methods for a Braking Resistor Unit.

A Braking Resistor that mounts to the Drive can also be used with Drives with outputs from 0.4 to 3.7 kW.

Table 2.8

L8-01 (Protect selection for internal DB resistor)	0 (Disables overheat protection)
L3-04 (Stall prevention selection during deceleration) (Select either one of them.)	0 (Disables stall prevention function)
	3 (Enables stall prevention function with braking resistor)

L8-01 is used when a braking resistor without thermal overload relay trip contacts (ERF type mounted to Drive) is connected.

The Braking Resistor Unit cannot be used and the deceleration time cannot be shortened by the Drive if L3-04 is set to 1 (i.e., if stall prevention is enabled for deceleration).

Wiring Control Circuit Terminals

◆ Wire Sizes and Closed-loop Connectors

For remote operation using analog signals, keep the control line length between the Digital Operator or operation signals and the Drive to 50 m (164 ft) or less, and separate the lines from high-power lines (main circuits or relay sequence circuits) to reduce induction from peripheral devices.

When setting frequencies from an external frequency reference (and not from a Digital Operator), used shielded twisted-pair wires and ground the shield to terminal E (G), as shown in the following diagram.

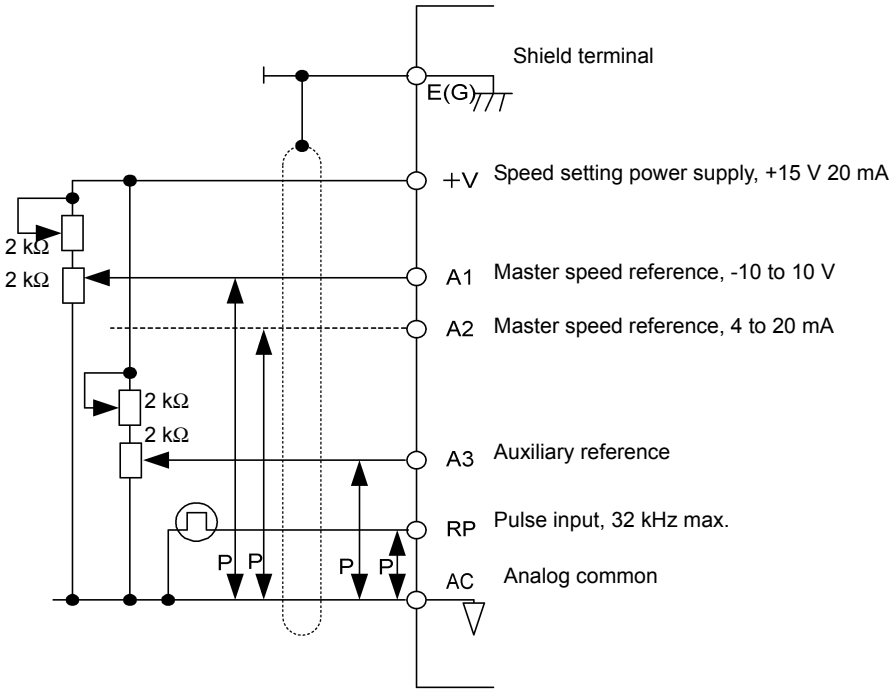

Fig 2.13

Terminal numbers and wire sizes are shown in *Table 2.9*.

Table 2.9 Terminal Numbers and Wire Sizes (Same for all Models)

Terminals	Terminal Screws	Tightening Torque lb-in (N•m)	Possible Wire Sizes AWG (mm^2)	Recommended Wire Size AWG (mm^2)	Wire Type
FM, AC, AM, M3, M4, SC, A1, A2, A3, +V, -V, S1, S2, S3, S4, S5, S6, S7, S8, MA, MB, MC, M1, M2, P3, C3, P4, C4, MP, RP, R+, R-, S9, S10, S11, S12, S+, S-, IG, SN, SP	Phoenix type*3	4.2 to 5.3 (0.5 to 0.6)	Stranded wire: 26 to 16 (0.14 to 1.5)	18 (0.75)	•Shielded, twisted-pair wire*1 •Shielded, polyethylene-covered, vinyl sheath cable*2
E (G)	M3.5	7.0 to 8.8 (0.8 to 1.0)	20 to 14 (0.5 to 2)	12 (1.25)	

* 1. Use shielded twisted-pair cables to input an external frequency reference.
* 2. Yaskawa recommends using straight solderless terminals on digital inputs to simplify wiring and improve reliability.
* 3. Yaskawa recommends using a thin-slot screwdriver with a 3.5 mm blade width.

◆ Control Circuit Terminal Functions

The functions of the control circuit terminals are shown in *Table 2.10*. Use the appropriate terminals for the correct purposes.

Table 2.10 Control Circuit Terminals

Type	No.	Signal Name	Function		Signal Level
Digital input signals	S1	Forward run/stop command	Forward run when CLOSED; stopped when OPEN.		24 Vdc, 8 mA Photocoupler isolation
	S2	Reverse run/stop command	Reverse run when CLOSED; stopped when OPEN.		
	S3	Multi-function input 1*1	Factory setting: External fault when CLOSED.	Multi-function digital inputs. Functions set by H1-01 to H1-10	
	S4	Multi-function input 2*1	Factory setting: Fault reset when CLOSED.		
	S5	Multi-function input 3*1	Factory setting: Multi-speed speed reference 1 effective when CLOSED.		
	S6	Multi-function input 4*1	Factory setting: Multi-speed speed reference 2 effective when CLOSED.		
	S7	Multi-function input 5*1	Factory setting: Jog frequency selected when CLOSED.		
	S8	Multi-function input 6*1	Factory setting: External baseblock when CLOSED.		
	S9	Multi-function input 7*1	Factory setting: Multi-speed speed reference 3 effective when CLOSED.		
	S10	Multi-function input 8*1	Factory setting: Multi-speed speed reference 4 effective when CLOSED.		
	S11	Multi-function input 9*1	Factory setting: Accel/decel time selected when CLOSED.		
	S12	Multi-function input 10*1	Factory setting: Emergency stop (NO contact) when CLOSED.		
	SC	Sequence input common	-		

Table 2.10 Control Circuit Terminals (Continued)

Type	No.	Signal Name	Function		Signal Level
Analog input signals	+V	+15 V power output	+15 V power supply for analog input or transmitters		+15 V (Max. current: 20 mA)
	-V	-15 V power output	-15 V power supply for analog input or transmitters		-15 V (Max. current: 20 mA)
	A1	Master speed frequency reference	-10 to +10 V/-100 to 100% 0 to +10 V/100%		-10 to +10 V, 0 to +10 V (Input impedance: 20 kΩ)
	A2	Multi-function analog input	4 to 20 mA/100%, -10 to +10 V/-100 to +100%, 0 to +10 V/100%	Multi-function analog input 2. Function set by H3-09	4 to 20 mA (Input impedance: 250 Ω)
	A3	Multi-function analog input	4 to 20 mA/100%, -10 to +10 V/-100 to +100%, 0 to +10 V/100%	Multi-function analog input 3. Function set by H3-05	4 to 20 mA (Input impedance: 250 Ω)
	AC	Analog reference common	0 V		-
	E(G)	Shield wire, optional ground line connection point	-		-
Photo-coupler outputs	P3	Multi-function PHC output 3	Factory setting: Ready for operation when CLOSED.		50 mA max. at 48 Vdc*2
	C3				
	P4	Multi-function PHC output 4	Factory setting: FOUT frequency detected when CLOSED.		
	C4				

Table 2.10 Control Circuit Terminals (Continued)

Type	No.	Signal Name	Function		Signal Level
Relay outputs	MA	Fault output signal (NO contact)	MA / MC: Closed during fault condition MB / MC: Open during fault condition		Form C Dry contacts capacity: 1 A max. at 250 Vac 1 A max. at 30 Vdc
	MB	Fault output signal (NC contact)			
	MC	Relay contact output common	-		
	M1	Multi-function contact output (NO contact)	Factory setting: Operating Operating when CLOSED across M1 and M2.	Multi-function digital output. Function set by H2-01	Form A Dry contacts capacity: 1 A max. at 250 Vac 1 A max. at 30 Vdc
	M2				
	M3	Multi-function contact output 2	Factory setting: Zero speed Zero speed level (b2-01) or below when CLOSED.	Multi-function digital output. Function set by H2-02	
	M4				
	M5	Multi-function contact output 3	Factory setting: Frequency agreement detection Frequency within 2 Hz of set frequency when CLOSED.	Multi-function digital output. Function set by H2-03	
	M6				
Analog monitor outputs	FM	Multi-function analog monitor 1	0 to +10Vdc / 100% frequency -10 to +10Vdc / 100% frequency 4 to 20mA / 100% frequency	Multi-function analog output 1. Function set by H4-01	0 to +10 Vdc ±5% 2 mA max.
	AM	Multi-function analog monitor 2	0 to +10Vdc / 100% Drive's rated output current -10 to +10Vdc / 100% Drive's rated output current 4 to 20mA / 100% Drive's rated output current	Multi-function analog output 2. Function set by H4-04	
	AC	Analog common	-		
Pulse I/O	RP	Multi-function pulse input*3	Factory setting: Frequency reference	Function set by H6-01	0 to 32 kHz (3 kΩ)
	MP	Multi-function pulse monitor	Factory setting: Output frequency	Function set by H6-06	0 to 32 kHz (2.2 kΩ)

Table 2.10 Control Circuit Terminals (Continued)

Type	No.	Signal Name	Function		Signal Level
RS-485/422	R+	MODBUS communications input	For 2-wire RS-485, short R+ and S+ as well as R- and S-.		Differential input, PHC isolation
	R-				
	S+	MODBUS communications output			Differential output, PHC isolation
	S-				
	IG	Communications shield wire	-		-

* 1. For a 3-wire sequence, the default settings are a 3-wire sequence for S5, multi-step speed setting 1 for S6 and multi-step speed setting 2 for S7.
* 2. When driving a reactive load, such as a relay coil, always insert a flywheel diode as shown in *Fig 2.14*.
* 3. Pulse input specifications are given in the following table.

Low level voltage	0.0 to 0.8 V
High level voltage	3.5 to 13.2 V
H duty	30% to 70%
Pulse frequency	0 to 32 kHz

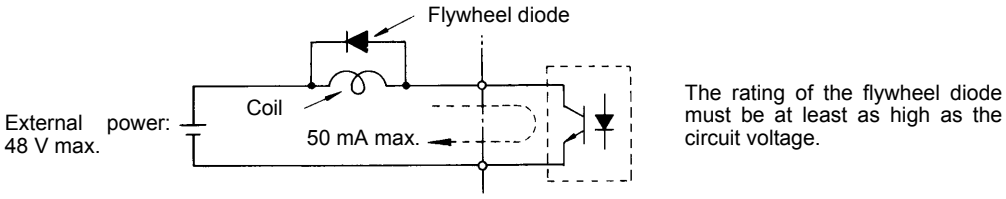

Fig 2.14 Flywheel Diode Connection

■Shunt Connector CN15 and DIP Switch S1

The shunt connector CN15 and DIP switch S1 are described in this section.

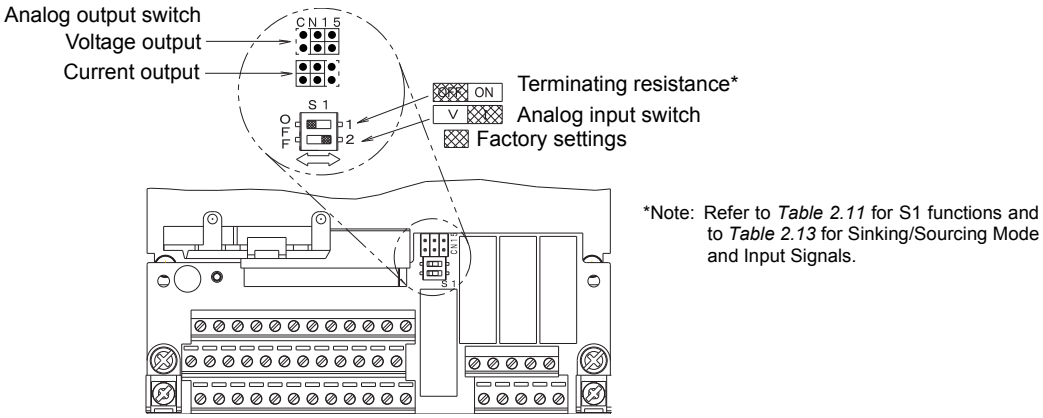

Fig 2.15 Shunt Connector CN15 and DIP Switch S1

The functions of DIP switch S1 are shown in the following table.

Table 2.11 DIP Switch S1

Name	Function	Setting
S1-1	RS-485 and RS-422 terminating resistance	OFF: No terminating resistance ON: Terminating resistance of 110 Ω
S1-2	Input method for analog input A2	OFF: 0 to 10 V (internal resistance: 20 kΩ) ON: 4 to 20 mA (internal resistance: 250 Ω)

The functions and positions of CN15 are shown in the following table.

Table 2.12 Jumper CN15 Configuration Options

Jumper CN15 Configuration	Analog Output Monitor Configuration
	Voltage Output (0-10Vdc) for terminals FM-AC (CH1) and AM-AC (CH2)
	Current Output (4-20mA) for terminals FM-AC (CH1) and AM-AC (CH2)
	Voltage Output (0-10Vdc) for terminals FM-AC (CH1) Current Output (4-20mA) for terminals AM-AC (CH2)
	Current Output (4-20mA) for terminals FM-AC (CH1) Voltage Output (0-10Vdc) for terminals AM-AC (CH2)

■ Sinking/Sourcing Mode

The multi-function input terminal logic can be switched between sinking mode (0 Vdc common) and sourcing mode (+24 Vdc common) by using the terminals SN, SC, and SP. An external 24 Vdc power supply is also supported, providing more freedom in signal input methods.

Table 2.13 Sinking/Sourcing Mode and Input Signals

	Internal Power Supply	External Power Supply
Sinking Mode	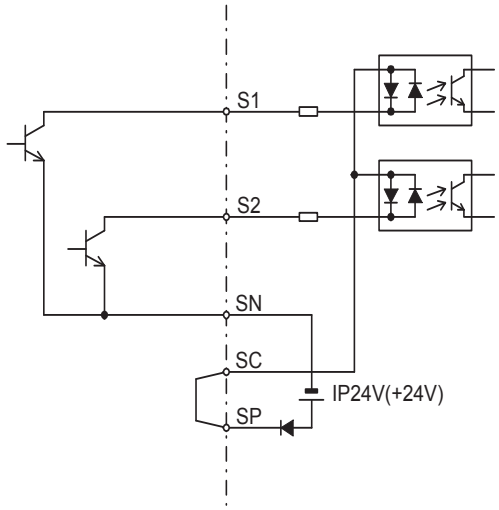	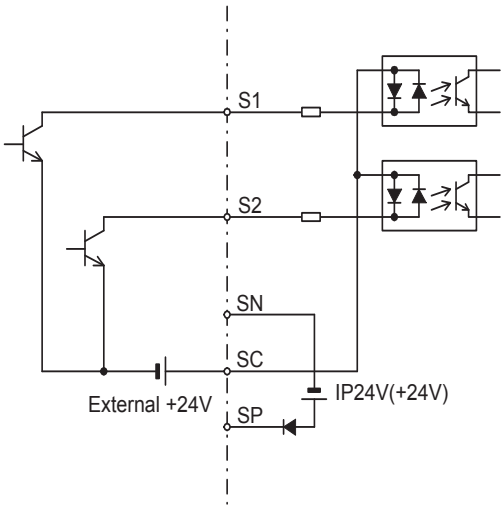
Sourcing Mode	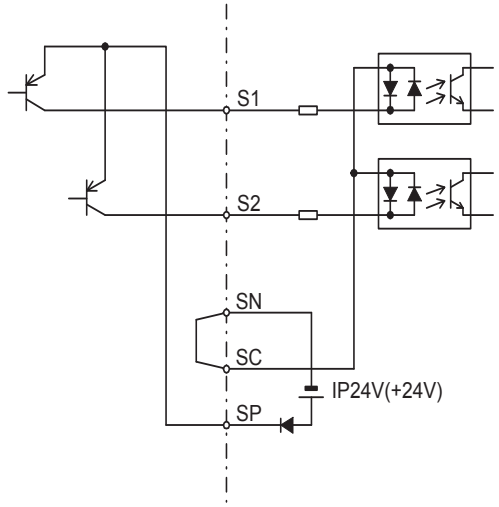	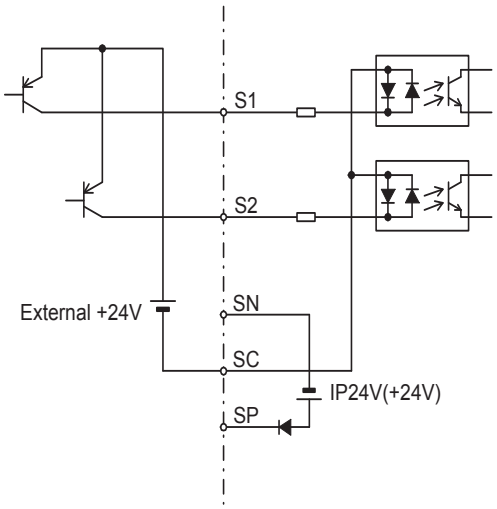

◆ Control Circuit Terminal Connections

Connections to Drive control circuit terminals are shown in *Fig 2.16*.

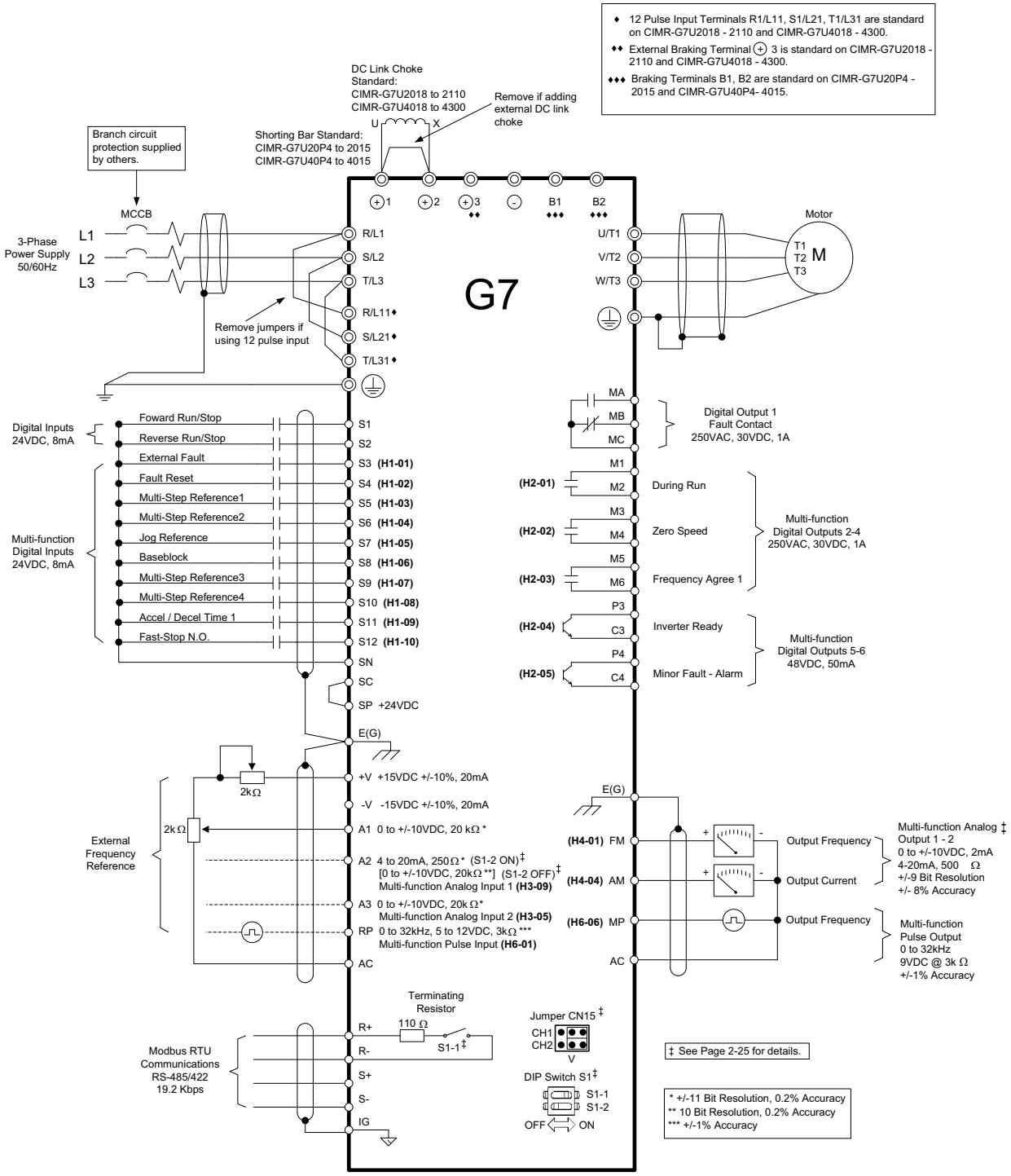

Fig 2.16 Control Circuit Terminal Connections

◆ Control Circuit Wiring Precautions

Observe the following precautions when wiring control circuits.

- Separate control circuit wiring from main circuit wiring (terminals R/L1, S/L2, T/L3, B1, B2, U/T1, V/T2, W/T3, ⊖, ⊕1, ⊕2, and ⊕3) and other high-power lines.
- Separate wiring for control circuit terminals MA, MB, MC, M1, M2, M3, M4, M5, and M6 (contact outputs) from wiring to other control circuit terminals.
- Use twisted-pair or shielded twisted-pair cables for control circuits to prevent operating faults. Process cable ends as shown in *Fig 2.17*.
- Connect the shield wire to terminal E (G).
- Insulate the shield with tape to prevent contact with other signal lines and equipment.

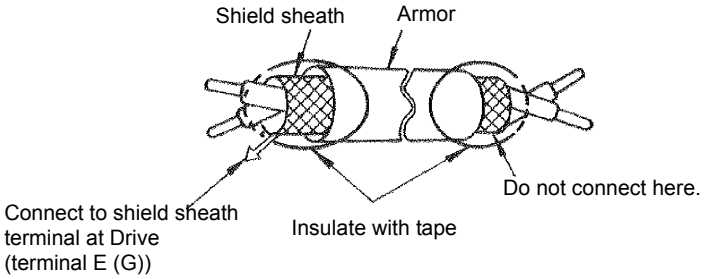

Fig 2.17 Processing the Ends of Twisted-pair Cables

◆ Control Circuit Wire Sizes

For remote operation, keep the length of the control wiring to 50m or less. Separate the control wiring from high-power lines (input power, motor leads or relay sequence circuits) to reduce noise induction from peripheral devices.

When setting speed commands from an external speed potentiometer, use shielded twisted-pair wires and ground the shield to terminal E(G), as shown above. Terminal numbers and wire sizes are shown in Table 2.9.

◆ Wiring Checks

Check all wiring after wiring has been completed. Do not perform a buzzer check on control circuits. Perform the following checks on the wiring.

- Is all wiring correct?
- Have any wire clippings, screws, or other foreign material been left?
- Are all screws tight?
- Are any wire ends contacting other terminals?

Installing and Wiring Option Cards

◆ Option Card Models and Specifications

Up to three Option Cards can be mounted in the Drive. You can mount up one card into each of the three places on the controller card (A, C, and D) shown in *Fig 2.18*.

Table 2.14 lists the type of Option Cards and their specifications.

Table 2.14 Option Card Specifications

Card	Model	Specifications	Mounting Location
PG Speed Control Cards	PG-A2	Serial open-collector/complimentary inputs	A
	PG-B2	Phase A/B complimentary inputs	A
	PG-D2	Single line-driver inputs	A
	PG-X2	Phase A/B line-driver inputs	A
Speed Reference Cards	AI-14U	Input signal levels 0 to 10 V DC (20 kΩ), 1 channel 4 to 20 mA (250 Ω), 1 channel Input resolution: 14-bit	C
	AI-14B	Input signal levels 0 to 10 V DC (20 kΩ) 4 to 20 mA (250 Ω), 3 channels Input resolution: 13-bit with sign bit	C
	DI-08	8-bit digital speed reference setting	C
	DI-16H2	16-bit digital speed reference setting	C
DeviceNet Communications Card	SI-N	DeviceNet communications support	C
Profibus-DP Communications Card	SI-P	Profibus-DP communications support	C
Analog Monitor Card	AO-08	8-bit analog outputs, 2 channels	D
	AO-12	12-bit analog outputs, 2 channels	D
Digital Output Card	DO-08	Six photocoupler outputs and 2 relay outputs	D
	DO-02C	2 relay outputs	D

◆ Installation

Before mounting an Option Board, remove power from the Drive and wait for the CHARGE LED to go out. Remove the Digital Operator, front cover, and option clip. Option Clip can be easily removed by squeezing the protruding portions of the clip and then pulling it out. Then, mount the Option Board(s).

The A Option Board uses a mounting spacer to secure the board to the control board. Insert the mounting spacer as shown in Fig 2.18.

After installing an Option Board into slot C or D, insert the Option Clip to prevent the side with the connector from rising.

Refer to documentation provided with the Option Board for detailed mounting instructions for option slots A, C, and D.

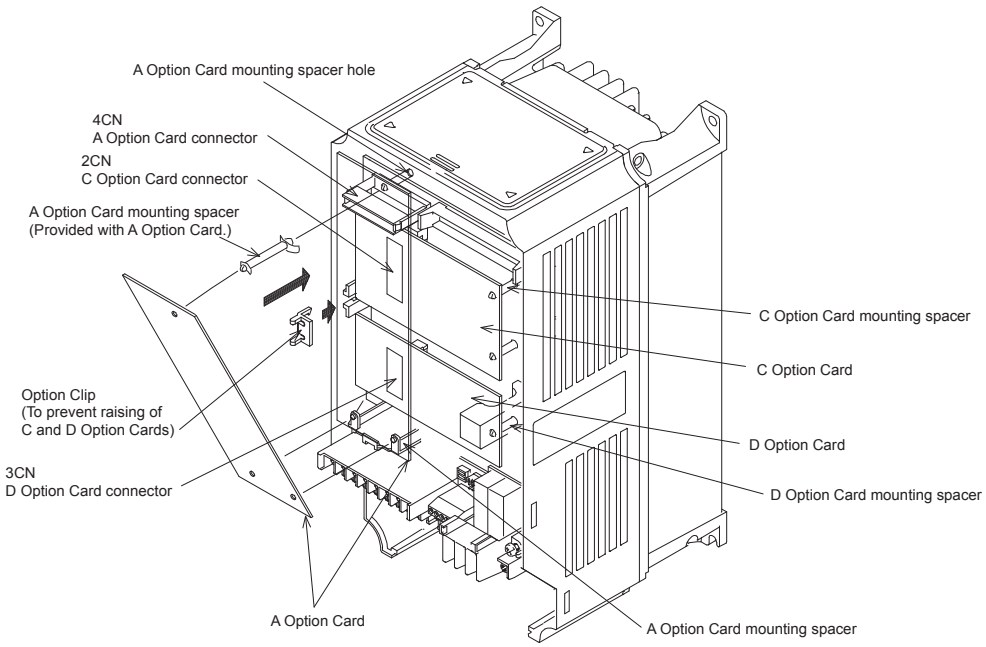

Fig 2.18 Mounting Option Cards

◆ PG Speed Control Card Terminals and Specifications

The terminal specifications for the PG Speed Control Cards are given in the following tables.

■PG-A2

The terminal specifications for the PG-A2 are given in the following table.

Table 2.15 PG-A2 Terminal Specifications

Terminal	No.	Contents	Specifications
TA1	1	Power supply for pulse generator	12 Vdc (±5%), 200 mA max.
	2		0 Vdc (GND for power supply)
	3	+12 V/open collector switching terminal	Terminal for switching between12 Vdc voltage input and open collector input. For open collector input, short across 3 and 4.
	4		
	5	Pulse input terminal	H: +4 to 12 Vdc; L: +1 Vdc max. (Maximum response frequency: 30 kHz)
	6		Pulse input common
	7	Pulse motor output terminal	12 Vdc (±10%), 20 mA max.
	8		Pulse monitor output common
TA2	(E)	Shield connection terminal	-

■PG-B2

The terminal specifications for the PG-B2 are given in the following table.

Table 2.16 PG-B2 Terminal Specifications

Terminal	No.	Contents	Specifications
TA1	1	Power supply for pulse generator	12 Vdc (±5%), 200 mA max.
	2		0 Vdc (GND for power supply)
	3	A-phase pulse input terminal	H: +8 to 12 Vdc L: +1 Vdc max. (Maximum response frequency: 30 kHz)
	4		Pulse input common
	5	B-phase pulse input terminal	H: +8 to 12 Vdc L: +1 Vdc max. (Maximum response frequency: 30 kHz)
	6		Pulse input common
TA2	1	A-phase monitor output terminal	Open collector output, 24 Vdc, 30 mA max.
	2		A-phase monitor output common
	3	B-phase monitor output terminal	Open collector output, 24 Vdc, 30 mA max.
	4		B-phase monitor output common
TA3	(E)	Shield connection terminal	-

■PG-D2

The terminal specifications for the PG-D2 are given in the following table.

Table 2.17 PG-D2 Terminal Specifications

Terminal	No.	Contents	Specifications
TA1	1	Power supply for pulse generator	12 Vdc (±5%), 200 mA max.*
	2		0 Vdc (GND for power supply)
	3		5 Vdc (±5%), 200 mA max.*
	4	Pulse input + terminal	Line driver input (RS-422 level input) Maximum response frequency: 300 kHz
	5	Pulse input - terminal	
	6	Common terminal	-
	7	Pulse monitor output + terminal	Line driver output (RS-422 level output)
	8	Pulse monitor output - terminal	
TA2	(E)	Shield connection terminal	-

* 5 Vdc and 12 Vdc cannot be used at the same time.

■PG-X2

The terminal specifications for the PG-X2 are given in the following table.

Table 2.18 PG-X2 Terminal Specifications

Terminal	No.	Contents	Specifications
TA1	1	Power supply for pulse generator	12 Vdc (±5%), 200 mA max.*
	2		0 Vdc (GND for power supply)
	3		5 Vdc (±5%), 200 mA max.*
	4	A-phase + input terminal	Line driver input (RS-422 level input) Maximum response frequency: 300 kHz
	5	A-phase - input terminal	
	6	B-phase + input terminal	
	7	B-phase - input terminal	
	8	Z-phase + input terminal	
	9	Z-phase - input terminal	
	10	Common terminal	0 Vdc (GND for power supply)
TA2	1	A-phase + output terminal	Line driver output (RS-422 level output)
	2	A-phase - output terminal	
	3	B-phase + output terminal	
	4	B-phase - output terminal	
	5	Z-phase + output terminal	
	6	Z-phase - output terminal	
	7	Control circuit common	Control circuit GND
TA3	(E)	Shield connection terminal	-

* 5 Vdc and 12 Vdc cannot be used at the same time.

◆ Wiring

Wiring examples are provided in the following illustrations for the Control Cards.

■ Wiring the PG-A2

Wiring examples are provided in the following illustrations for the PG-A2.

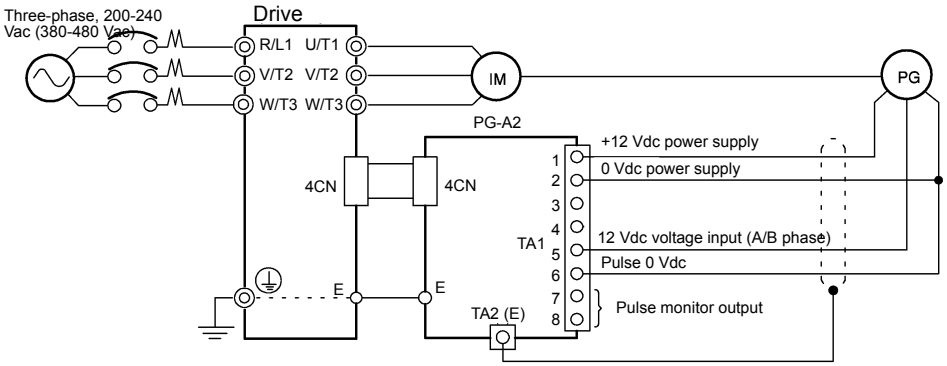

Fig 2.19 Wiring a 12 V Voltage Input

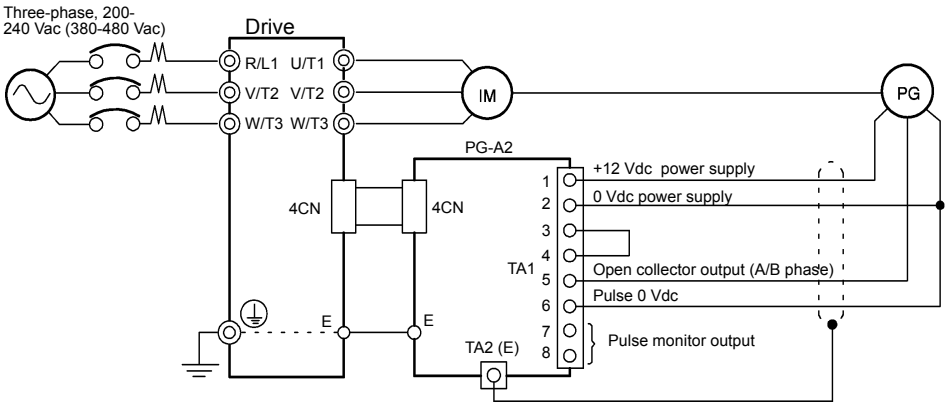

- Shielded twisted-pair wires must be used for signal lines.
- Do not use the pulse generator's power supply for anything other than the pulse generator (encoder). Using it for another purpose can cause malfunctions due to noise.
- The length of the pulse generator's wiring must not be more than 100 meters (328 ft).

Fig 2.20 Wiring an Open-collector Input

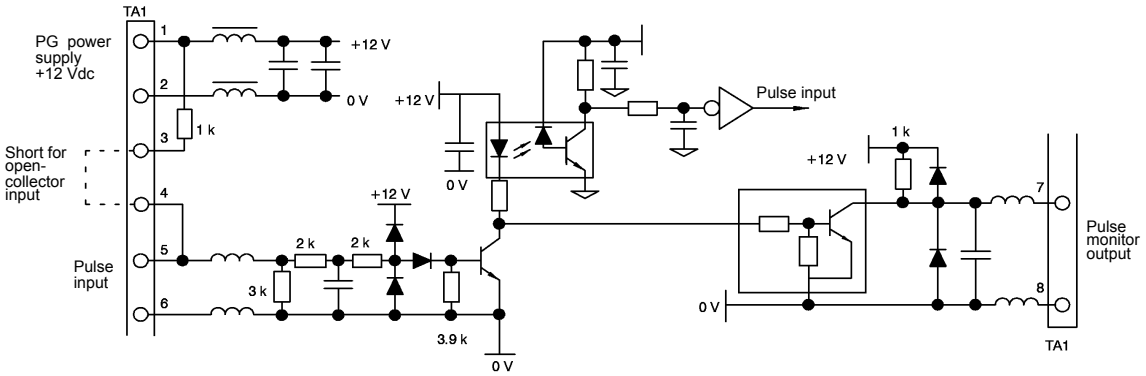

Fig 2.21 I/O Circuit Configuration of the PG-A2

■ Wiring the PG-B2

Wiring examples are provided in the following illustrations for the PG-B2.

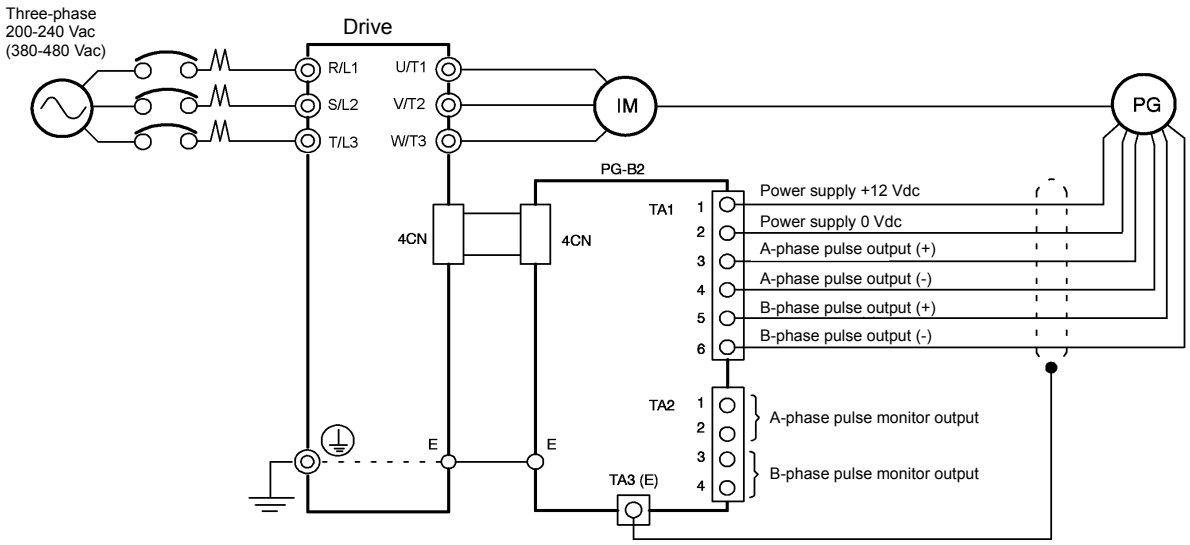

- Shielded twisted-pair wires must be used for signal lines.
- Do not use the pulse generator's power supply for anything other than the pulse generator (encoder). Using it for another purpose can cause malfunctions due to noise.
- The length of the pulse generator's wiring must not be more than 100 meters (328 ft).
- The direction of rotation of the PG can be set in user parameter F1-05. The factory preset if for forward rotation, A-phase advancement.

Fig 2.22 PG-B2 Wiring

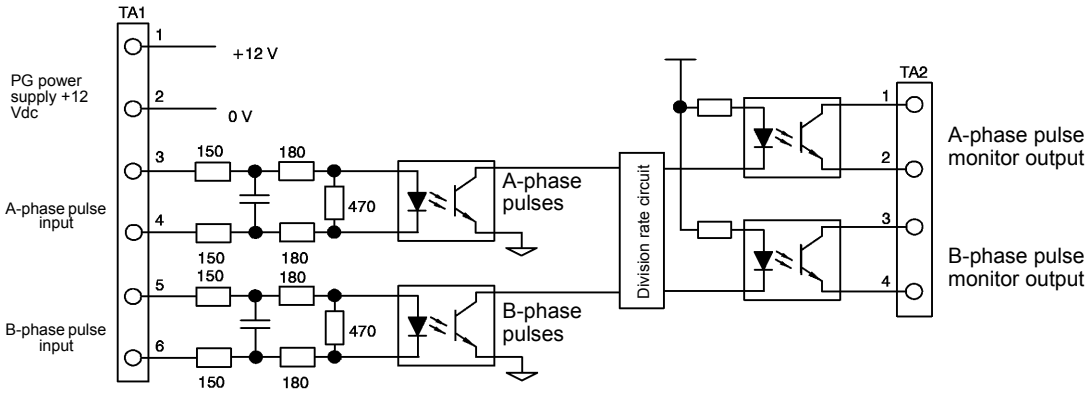

- When connecting to a voltage-output-type PG (encoder), select a PG that has an output impedance with a current of at least 12 mA to the input circuit photocoupler (diode).
- The pulse monitor dividing ratio can be changed using parameter F1-06.

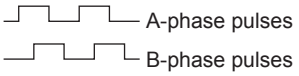

Fig 2.23 I/O Circuit Configuration of the PG-B2

■Wiring the PG-D2

Wiring examples are provided in the following illustrations for the PG-D2.

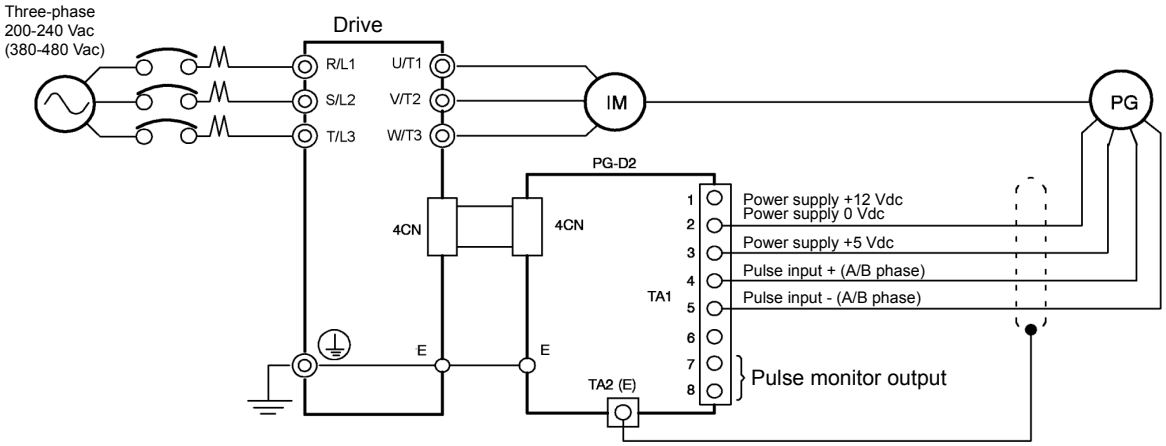

- Shielded twisted-pair wires must be used for signal lines.
- Do not use the pulse generator's power supply for anything other than the pulse generator (encoder). Using it for another purpose can cause malfunctions due to noise.
- The length of the pulse generator's wiring must not be more than 100 meters.

Fig 2.24 PG-D2 Wiring

2

■Wiring the PG-X2

Wiring examples are provided in the following illustrations for the PG-X2.

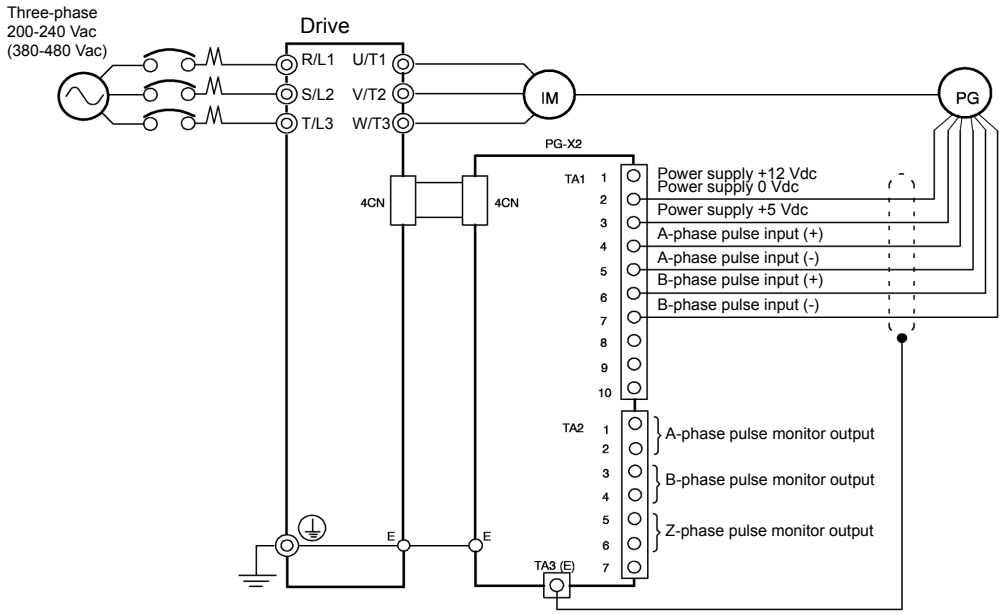

- Shielded twisted-pair wires must be used for signal lines.
- Do not use the pulse generator's power supply for anything other than the pulse generator (encoder). Using it for another purpose can cause malfunctions due to noise.
- The length of the pulse generator's wiring must not be more than 100 meters (328 ft).
- The direction of rotation of the PG can be set in user parameter F1-05 (PG Rotation). The factory preset if for motor forward rotation, A-phase advancement.

Fig 2.25 PG-X2 Wiring

◆ Wiring Terminal Blocks

Use no more than 100 meters (328 ft) of wiring for PG (encoder) signal lines, and keep them separate from power lines.

Use shielded, twisted-pair wires for pulse inputs and pulse output monitor wires, and connect the shield to the shield connection terminal.

■Wire Sizes (Same for All Models)

Terminal wire sizes are shown in *Table 2.19*.

Table 2.19 Wire Sizes

Terminal	Terminal Screws	Wire Thickness (mm^2)	Wire Type
Pulse generator power supply Pulse input terminal Pulse monitor output terminal	-	Stranded wire: 0.5 to 1.25 Single wire: 0.5 to 1.25	• Shielded, twisted-pair wire • Shielded, polyethylene-covered, vinyl sheath cable
Shield connection terminal	M3.5	0.5 to 2	

■Straight Solderless Terminals for Control Circuit Terminals

We recommend using straight solderless terminals on signal lines to simplify wiring and improve reliability.

■Closed-loop Connector Sizes and Tightening Torque

The closed-loop connectors and tightening torques for various wire sizes are shown in *Table 2.20*.

Table 2.20 Closed-loop Connectors and Tightening Torques

Wire Thickness [mm^2]	Terminal Screws	Crimp Terminal Size	Tightening Torque (N • m)
0.5	M3.5	1.25 - 3.5	0.8
0.75		1.25 - 3.5	
1.25		1.25 - 3.5	
2		2 - 3.5	

■Wiring Method and Precautions

Observe the following precautions when wiring.

- Separate the control signal lines for the PG Speed Control Card from main circuit lines and power lines.
- Connect the shield when connecting to a PG. The shield must be connected to prevent operational errors caused by noise. Also, do not use any lines that are more than 100 m (328 ft) long. Refer to *Fig 2.17* for details on connecting the shield.
- Connect the shield to the shield terminal (E).
- Do not solder the ends of wires. Doing so may cause contact faults.
- When not using straight solderless terminals, strip the wires to a length of approximately 5.5 mm (0.2 in).

◆ Selecting the Number of PG (Encoder) Pulses

The setting for the number of PG pulses depends on the model of PG Speed Control Card being used. Set the correct number for your model.

■PG-A2/PG-B2

The maximum response frequency is 32,767 Hz.

Use a PG that outputs a maximum frequency of approximately 20 kHz for the rotational speed of the motor.

$$f_{PG}\,(\text{Hz}) = \frac{\text{Motor speed at maximum frequency output (RPM)}}{60} \times \text{PG rating (ppr)}$$

Some examples of PG output frequency (number of pulses) for the maximum frequency output are shown in *Table 2.21*.

Table 2.21 PG Pulse Selection Examples

Motor's Maximum Speed (RPM)	PG Rating (ppr)	PG Output Frequency for Maximum Frequency Output (Hz)
1800	600	18,000
1500	800	20,000
1200	1000	20,000
900	1200	18,000

Note 1. The motor speed at maximum frequency output is expressed as the sync rotation speed.
2. The PG power supply is 12 Vdc.
3. A separate power supply is required if the PG power supply capacity is greater than 200 mA. (If momentary power loss must be handled, use a backup capacitor or other method.)

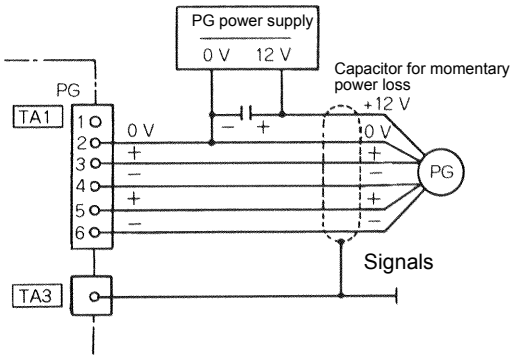

Fig 2.26 PG-B2 Connection Example

■PG-D2/PG-X2

There are 5 Vdc and 12 Vdc PG power supplies.
Check the PG power supply specifications before connecting.

The maximum response frequency is 300 kHz.

Use the following equation to computer the output frequency of the PG (f_{PG}).

$$f_{PG}\,(\text{Hz}) = \frac{\text{Motor speed at maximum frequency output (RPM)}}{60} \times \text{PG rating (ppr)}$$

A separate power supply is required if the PG power supply capacity is greater than 200 mA. (If momentary power loss must be handled, use a backup capacitor or other method.)

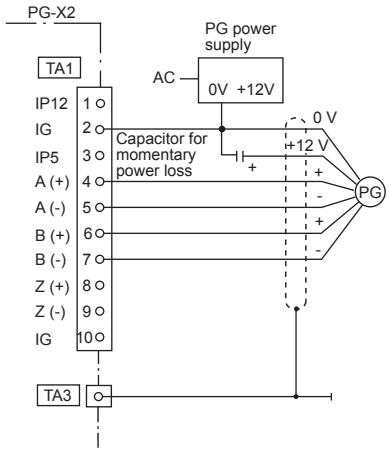

Fig 2.27 PG-X2 Connection Example (for 12 Vdc PG power supply)

3

Digital Operator and Modes

This chapter describes Digital Operator displays and functions, and provides an overview of operating modes and switching between modes.

Digital Operator 3-2
Modes 3-5

Digital Operator

The Digital Operator is used for programming, operating, monitoring, and copying the Drive's parameters. To copy parameters, G7 Drives must have the same software version, model, and control method. The various items included on the Digital Operator are described below.

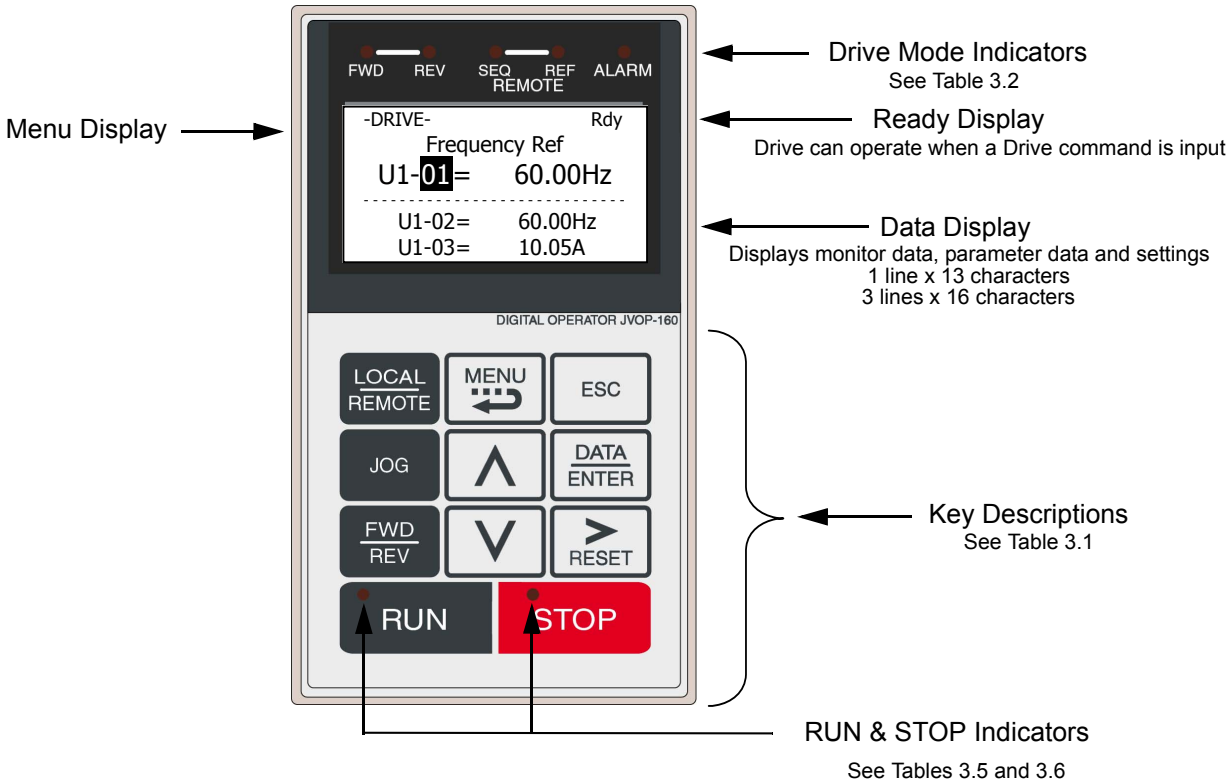

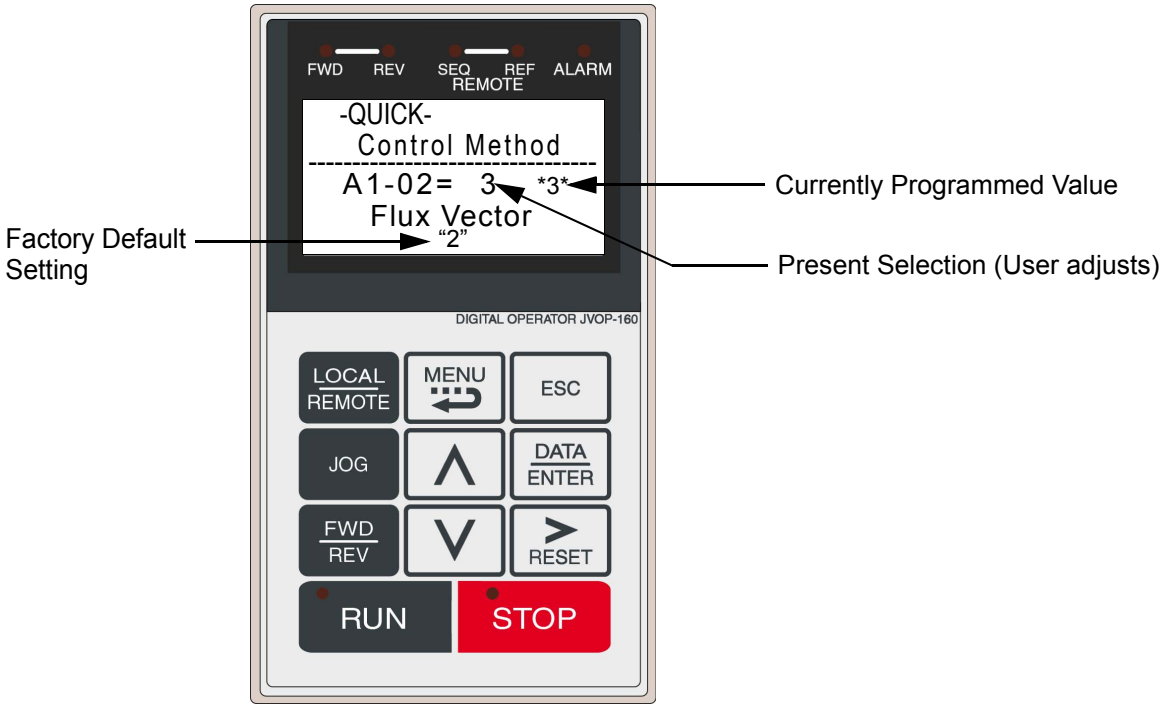

◆ Digital Operator Keys

The names and functions of the Digital Operator Keys are described in *Table 3.1*.

Table 3.1 Key Functions

Key	Name	Function
LOCAL/REMOTE	LOCAL/REMOTE Key	Switches between operation via the Digital Operator (LOCAL) and control circuit terminal operation (REMOTE). This Key can be enabled or disabled by setting user parameter o2-01.
MENU	MENU Key	Selects menu items (modes).
ESC	ESC Key	Returns to the status before the DATA/ENTER Key was pressed.
JOG	JOG Key	Enables jog operation when the Drive is being operated from the Digital Operator.
FWD/REV	FWD/REV Key	Selects the rotation direction of the motor when the Drive is being operated from the Digital Operator.
RESET	Shift/RESET Key	Sets the number of digits for user parameter settings. Also acts as the Reset Key when a fault has occurred.
∧	Increment Key	Selects menu items, sets user parameter numbers, and increments set values. Used to move to the next item or data.
∨	Decrement Key	Selects menu items, sets user parameter numbers, and decrements set values. Used to move to the previous item or data.
DATA/ENTER	DATA/ENTER Key	Pressed to enter menu items, user parameters, and set values. Also used to switch from one display to another.
RUN	RUN Key	Starts the Drive operation when the Drive is being controlled by the Digital Operator.
STOP	STOP Key	Stops Drive operation. This Key can be enabled or disabled when operating from the control circuit terminal by setting user parameter o2-02.

Note Except in diagrams, Keys are referred to using the Key names listed in the above table.

Drive Mode Indicators

The definition of the Drive mode indicators are shown in Table 3.2.

Table 3.2 Drive Mode Indicators

Indicator	Definition
FWD	Lit when a forward run command is input.
REV	Lit when a reverse run command is input.
REMOTE SEQ	See Table 3.3.
REMOTE REF	See Table 3.4.
ALARM	Lit when a fault has occurred. Flashes when an Alarm has occurred.

◆ REMOTE Sequence (SEQ) Indicator

The status of the "REMOTE" Sequence (SEQ) indicator is shown in Table 3.3. This indicator is always "Off" when the Drive is in the "LOCAL" mode. When the Drive is in the "REMOTE" mode, the SEQ indicator status is dependent on the setting of parameter b1-02 (Run Command Selection). See Table 3.3.

Table 3.3 REMOTE Sequence (SEQ) Indicator

Indicator Status	Condition
On	Parameter b1-02 (Run Command Selection) is set to terminal strip, communications, or an option board as indicated below: b1-02 =1 (Terminals) =2 (Communications) =3 (Option PCB)
Off	Parameter b1-02 (Run Command Selection) is set to Digital Operator as indicated below: b1-02=0 (Operator)

◆ REMOTE Reference (REF) Indicator

The status of the "REMOTE" Reference (REF) indicator is shown in Table 3.4. This indicator is always "Off" when the Drive is in the "LOCAL" mode. When the Drive is in the "REMOTE" mode, the REF indicator status is dependent on the setting of parameter b1-01 (Frequency Reference Selection). See Table 3.4.

Table 3.4 REMOTE Reference (REF) Indicator

Indicator Status	Condition
On	Parameter b1-01 (Frequency Reference Selection) is set to terminal strip, communications, option board, or pulse train as indicated below: b1-01 =1 (Terminals) =2 (Communications) =3 (Option PCB) =4 (Pulse Train)
Off	Parameter b1-01 (Frequency Reference Selection) is set to digital operator as indicated below: b1-01=0 (Operator)

◆ Run Indicator

The status of the “RUN” indicator is shown in Table 3.5 when the Drive is in either the “LOCAL” or “REMOTE” mode.

Table 3.5 RUN Indicator

Indicator Status	Condition
On	Drive is running.
Blinking	Drive is decelerating to a stop.
Off	Drive is stopped.

◆ Stop Indicator

The status of the “STOP” indicator is shown in Table 3.6 when the Drive is in either the “LOCAL” or “REMOTE” mode.

Table 3.6 STOP Indicator

Indicator Status	Condition
On	Drive is decelerating to a stop or stopped.
Blinking	Drive is in a run condition but the frequency reference is less than the minimum output frequency E1-09, or the Drive is running in “REMOTE” mode and the “STOP” key on has been pressed.
Off	Drive is running.

Modes

This section describes the Drive's modes and switching between modes.

◆ Drive Modes

The Drive's user parameters and monitoring functions are organized in groups called modes that make it easier to read and set user parameters.The Drive is equipped with 5 modes.
The 5 modes and their primary functions are shown.

Table 3.7 Modes

Mode	Primary function(s)
Drive mode	The Drive can be run in this mode. Use this mode when monitoring values such as frequency references or output current, displaying fault information, or displaying the fault history.
Quick programming mode	Use this mode to reference and set the minimum user parameters to operate the Drive (e.g., the operating environment of the Drive and Digital Operator).
Advanced programming mode	Use this mode to reference and set all user parameters.
Verify mode	Use this mode to read/set user parameters that have been changed from their factory-set values.
Autotuning mode*	Use this mode when running a motor with unknown motor parameters in the vector control mode. The motor parameters are calculated and set automatically. This mode can also be used to measure only the motor line-to-line resistance.

* Always perform autotuning with the motor before operating using vector control. Autotuning mode will not be displayed during operation or when an error has occurred. The default setting of the Drive is for open-loop vector control 1 (A1-02 = 2).

◆ Switching Modes

The mode selection display will appear when the MENU Key is pressed from a monitor or setting display. Press the MENU Key from the mode selection display to switch between the modes.

Press the DATA/ENTER Key from the mode selection key to monitor data and from a monitor display to access the setting display.

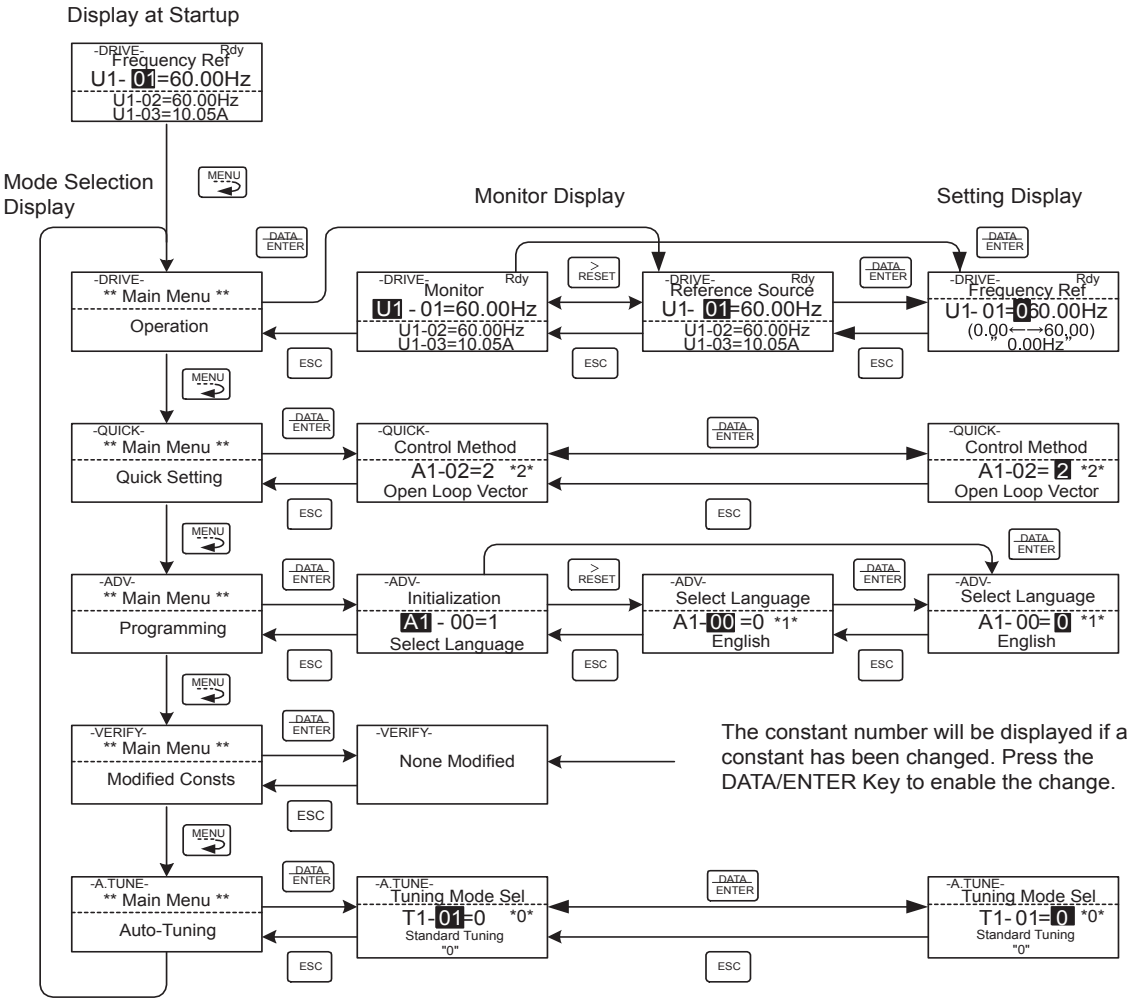

Fig 3.1 Mode Transitions

IMPORTANT

When running the Drive after using Digital Operator, press the MENU Key to select the drive mode (displayed on the LCD screen) and then press the DATA/ENTER Key from the drive mode display to bring up the monitor display. Run commands can't be received from any other display. (Monitor display in the drive mode will appear when the power is turned ON.)

◆ Drive Mode

Drive mode is the mode in which the Drive can be operated. The following monitor displays are possible in drive mode: The frequency reference, output frequency, output current, and output voltage, as well as fault information and the fault history.

When b1-01 (Reference selection) is set to 0, the frequency can be changed from the frequency setting display. Use the Increment, Decrement, and Shift/RESET Keys to change the frequency. The user parameter will be written and the monitor display will be returned to when the DATA/ENTER Key is pressed after changing the setting.

■Example Operations

Key operations in drive mode are shown in the following figure.

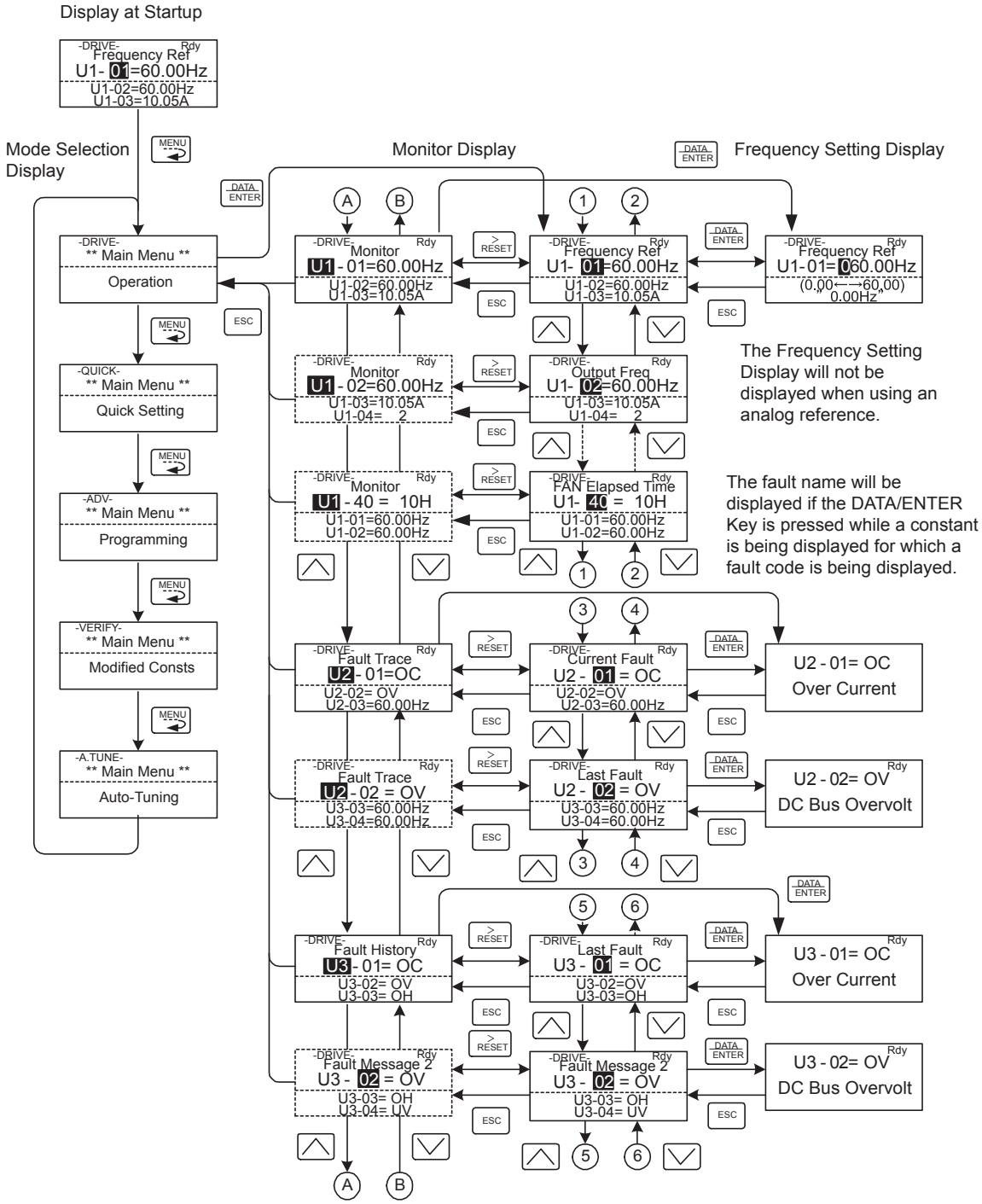

Fig 3.2 Operations in Drive Mode

Note When changing the display with the Increment and Decrement Keys, the next display after the one for the last parameter number will be the one for the first parameter number and vise versa. For example, the next display after the one for U1-01 will be U1-40. This is indicated in the figures by the letters A and B and the numbers 1 to 6.

IMPORTANT

The display for the first monitor parameter (frequency reference) will be displayed when power is turned ON. The monitor item displayed at startup can be set in o1-02 (Monitor Selection after Power Up). Operation cannot be started from the mode selection display.

◆ Quick Programming Mode

In quick programming mode, the parameters required for Drive trial operation can be monitored and set.

Parameters can be changed from the setting displays. Use the Increment, Decrement, and Shift/RESET Keys to change the frequency. The user parameter will be written and the monitor display will be returned to when the DATA/ENTER Key is pressed after changing the setting.

Refer to *Chapter 5 User Parameters* for details on the parameters displayed in quick programming mode.

■Example Operations

Key operations in quick programming mode are shown in the following figure.

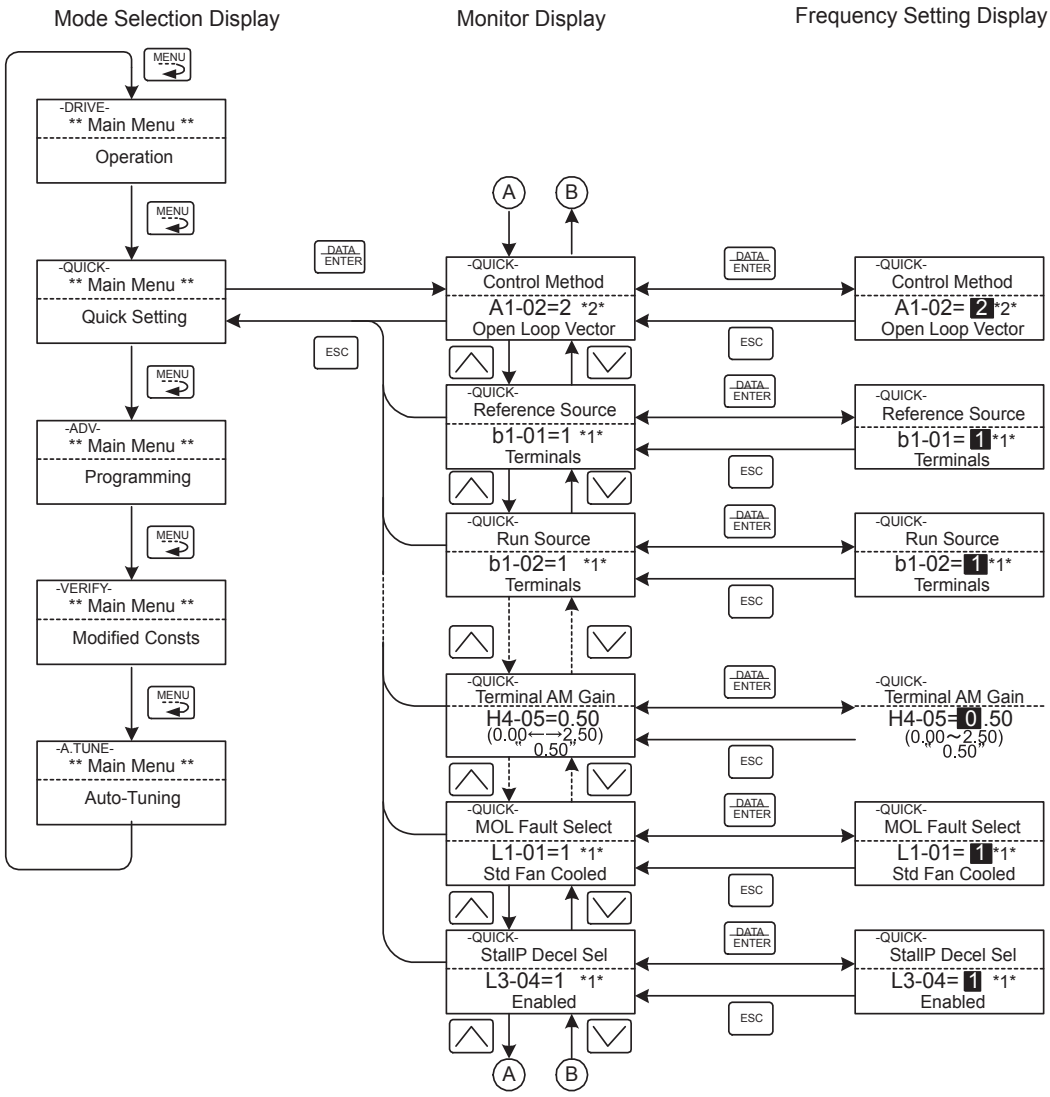

Fig 3.3 Operations in Quick Programming Mode

◆ Advanced Programming Mode

In advanced programming mode, all Drive parameters can be monitored and set.

Parameters can be changed from the setting displays. Use the Increment, Decrement, and Shift/RESET Keys to change the frequency. The user parameter will be written and the monitor display will be returned to when the DATA/ENTER Key is pressed after changing the setting.

Refer to *Chapter 5 User Parameters* for details on the parameters.

■Example Operations

Key operations in advanced programming mode are shown in the following figure.

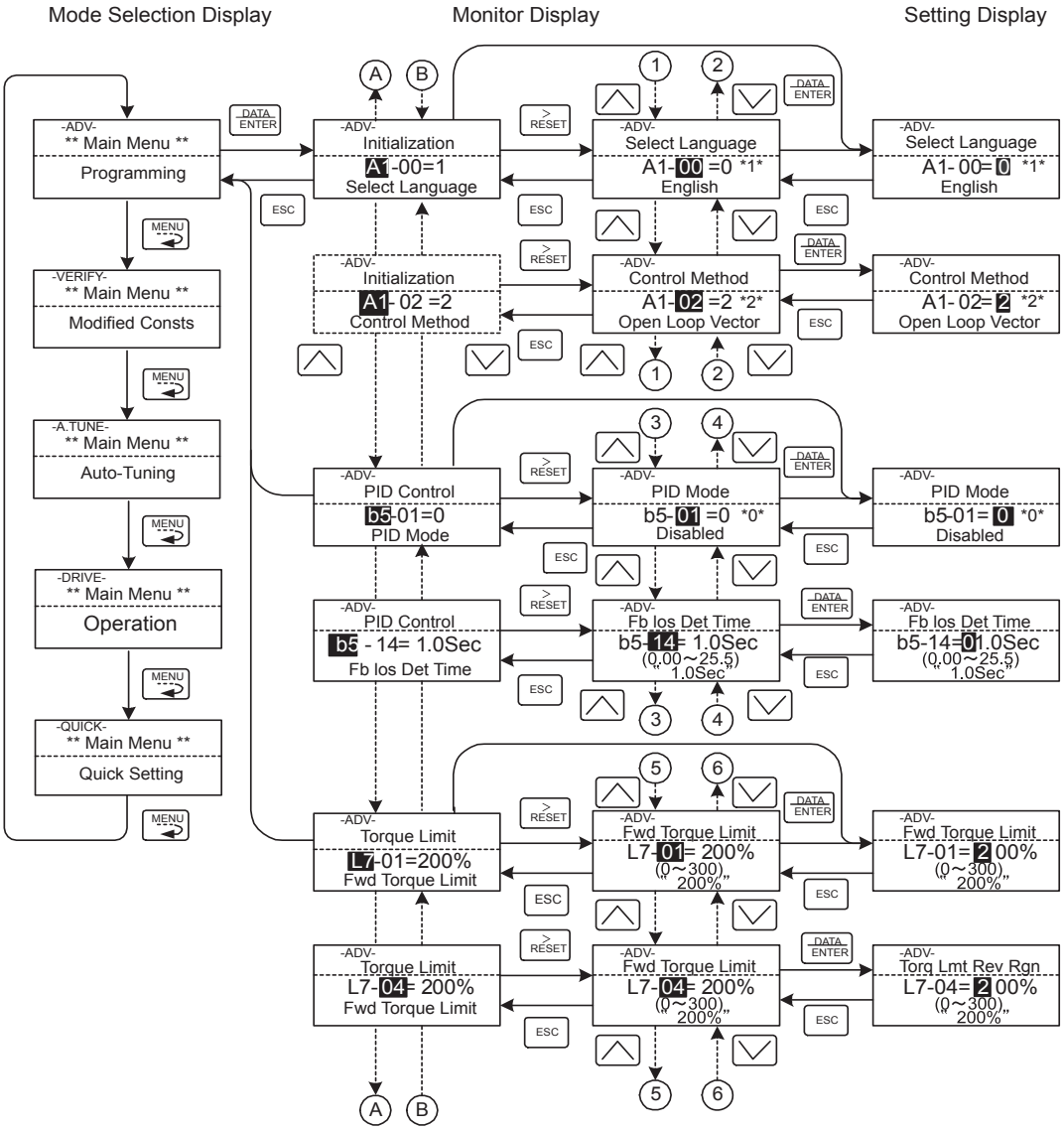

Fig 3.4 Operations in Advanced Programming Mode

■Setting User Parameters

Here, the procedure is shown to change C1-01 (Acceleration Time 1) from 10 s to 20 s.

Table 3.8 Setting User Parameters in Advanced Programming Mode

Step No.	Digital Operator Display	Description
1	-DRIVE- Rdy Frequency Ref U1- 01=60.00Hz U1-02=60.00Hz U1-03=10.05A	Power supply turned ON.
2	-DRIVE- ** Main Menu ** Operation	MENU Key pressed to enter drive mode.
3	-QUICK- ** Main Menu ** Quick Setting	MENU Key pressed to enter quick programming mode.
4	-ADV- ** Main Menu ** Programming	MENU Key pressed to enter advanced programming mode.
5	-ADV- Initialization A1-00=1 Select Language	DATA/ENTER pressed to access monitor display.
6	-ADV- Accel Time 1 C1-00= 10.0Sec (0.0←→6000.0) " 10.0Sec"	Increment or Decrement Key pressed to display C1-01 (Acceleration Time 1).
7	-ADV- Accel Time 1 C1-01= 0010.0Sec (0.0←→6000.0) " 10.0Sec"	DATA/ENTER Key pressed to access setting display. The setting of C1-01 (10.00) is displayed.
8	-ADV- Accel Time 1 C1-01= 0010.0Sec (0.0←→6000.0) " 10.0Sec"	Shift/RESET Key pressed to move the flashing digit to the right.
9	-ADV- Accel Time 1 C1-01= 0010.0Sec (0.0←→6000.0) " 10.0Sec"	Increment Key pressed to change set value to 20.00 s.
10	-ADV- Accel Time 1 C1-01= 0020.0Sec (0.0←→6000.0) " 10.0Sec"	DATA/ENTER Key pressed to enter the set data.
11	-ADV- Entry Accepted	"Entry Accepted" is displayed for 1.0 s after the data setting has been confirmed with the DATA/ENTER Key.
12	-ADV- Accel Time 1 C1- 01= 20.0Sec (0.0←→6000.0) " 10.0Sec"	The monitor display for C1-01 returns.

■External Fault Setting Procedure

Examples of the Digital Operator displays that appear when setting an eternal fault for a multi-function contact input in Advanced Programming Mode are shown in the following diagram.

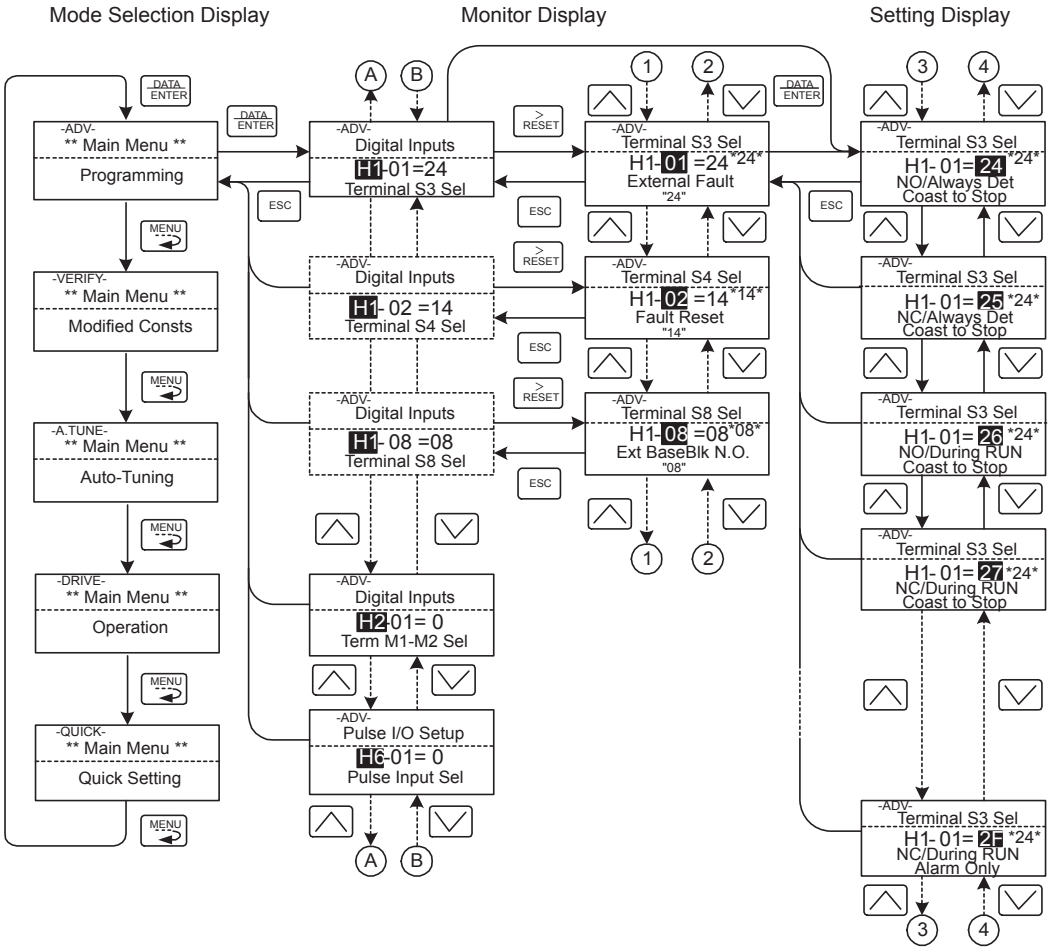

Fig 3.5 External Fault Function Setting Example

◆ Verify Mode

Verify mode is used to display any parameters that have been changed from their default settings in a programming mode or by autotuning. “None” will be displayed if no settings have been changed.

Of the environment mode settings, only A1-02 will be displayed if it has been changed. Other environment modes settings will not be displayed even if they have been changed from their default settings.

Even in verify mode, the same procedures can be used to change settings as are used in the programming modes. Use the Increment, Decrement, and Shift/RESET Keys to change the frequency. The user parameter will be written and the monitor display will be returned to when the DATA/ENTER Key is pressed after changing the setting.

■Example Operations

An example of key operations is given below for when the following settings have been changed from their default settings: b1-01 (Reference Selection), C1-01 (Acceleration Time 1), E1-01 (Input Voltage Setting), and E2-01 (Motor Rated Current).

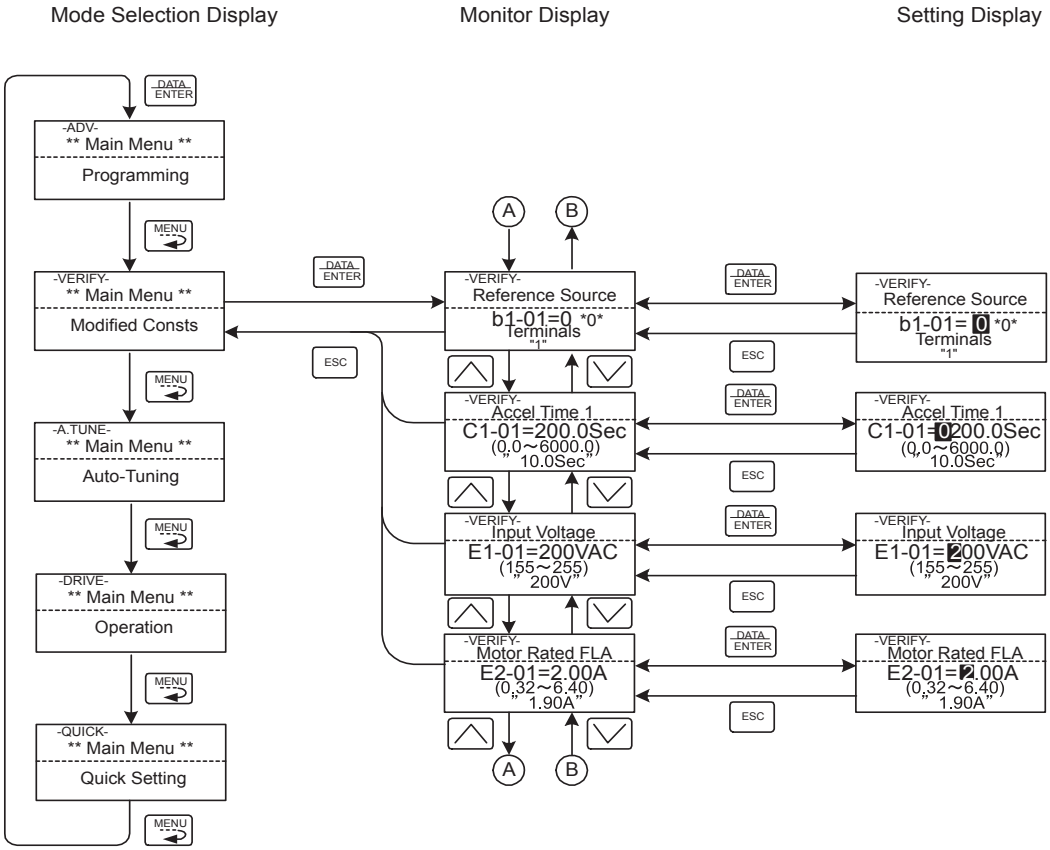

Fig 3.6 Operations in Verify Mode

◆ Autotuning Mode

Autotuning automatically tunes and sets the required motor parameters when operating in the vector control modes. Always perform autotuning before starting operation.

When V/f control has been selected, stationary autotuning for only line-to-line resistance can be selected.

When the motor cannot be disconnected from the load, perform stationary autotuning. Contact your Yaskawa representatives to set motor parameters by calculation.

The Drive's autotuning function automatically determines the motor parameters, while a servo system's autotuning function determines the size of a load, the drives autotuning functions are fundamentally different. The default setting of the Drive is for open-loop vector control 1.

■Example of Operation

Set the motor output power (in kW), rated voltage, rated current, rated frequency, rated speed, and number of poles specified on the nameplate on the motor and then press the RUN Key. The motor is automatically run and the motor parameters measured based on these settings and autotuning will be set.

Always set the above items. Autotuning cannot be started otherwise, e.g., it cannot be started from the motor rated voltage display.

Parameters can be changed from the setting displays. Use the Increment, Decrement, and Shift/RESET Keys to change the frequency. The user parameter will be written and the monitor display will be returned to when the DATA/ENTER Key is pressed after changing the setting.

The following example shows autotuning for open-loop vector control while operating the motor without switching to motor 2.

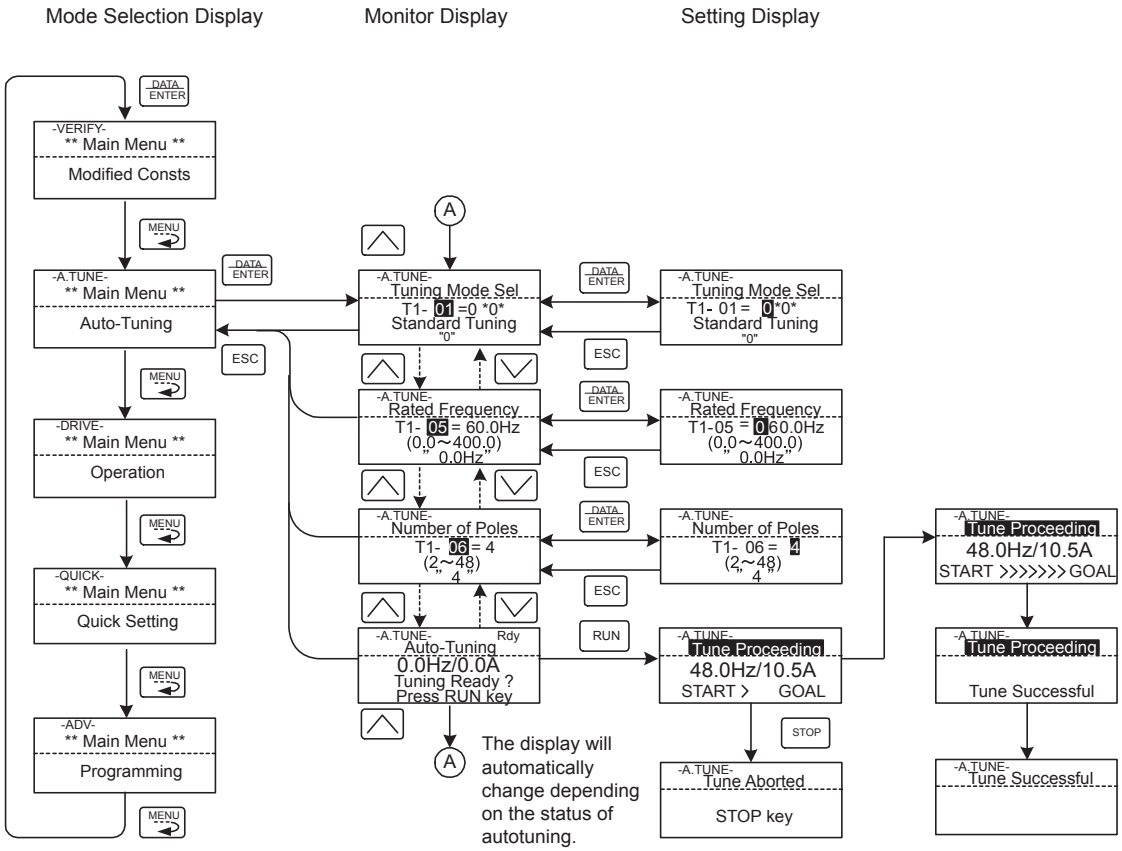

* TUn10 will be displayed during rotational autotuning and TUn11 will be displayed during stationary autotuning. The DRIVE indicator will light when autotuning starts.

Fig 3.7 Operation in Autotuning Mode

IMPORTANT

The setting displays in for autotuning depend on the control mode (V/f, V/f with PG, open-loop vector 1, open-loop vector 2, or flux vector). If a fault occurs during autotuning, refer to *Chapter 7 Troubleshooting.*

4

Trial Operation

This chapter describes the procedures for trial operation of the Drive and provides an example of trial operation.

Trial Operation Procedure.....4-2
Trial Operation Procedures.....4-3
Adjustment Suggestions.....4-17

Trial Operation Procedure

Perform trial operation according to the following flowchart.

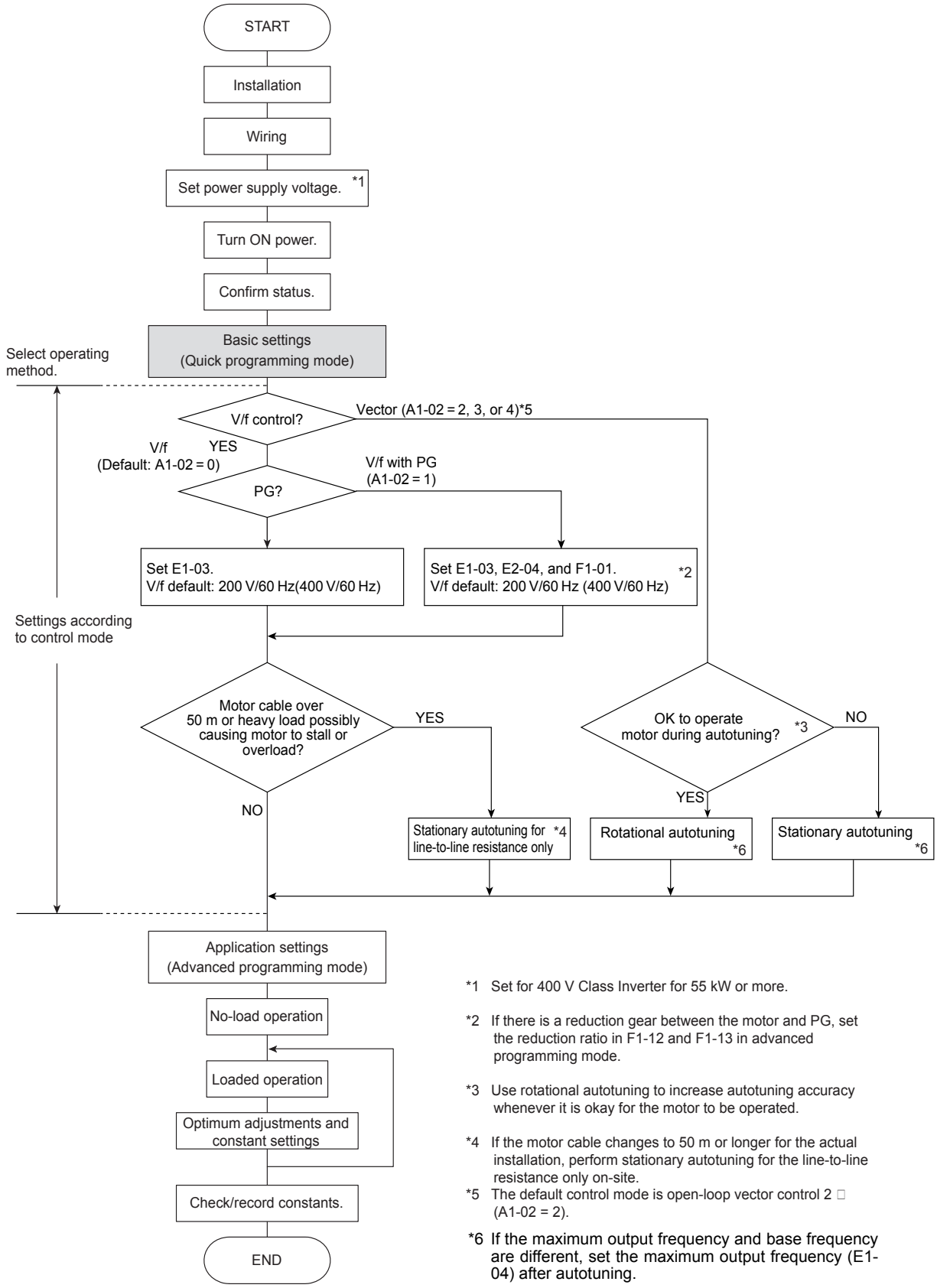

*1 Set for 400 V Class Inverter for 55 kW or more.

*2 If there is a reduction gear between the motor and PG, set the reduction ratio in F1-12 and F1-13 in advanced programming mode.

*3 Use rotational autotuning to increase autotuning accuracy whenever it is okay for the motor to be operated.

*4 If the motor cable changes to 50 m or longer for the actual installation, perform stationary autotuning for the line-to-line resistance only on-site.

*5 The default control mode is open-loop vector control 2 □ (A1-02 = 2).

*6 If the maximum output frequency and base frequency are different, set the maximum output frequency (E1-04) after autotuning.

Fig 4.1 Trial Operation Flowchart

Trial Operation Procedures

The procedure for the trial operate is described in order in this section.

◆ Setting the Power Supply Voltage Jumper (380-480 V Class Drives of 55 kW or Higher)

Set the power supply voltage jumper after setting E1-01 (Input Voltage Setting) for 380-480 V Class Drives of 55 kW or higher. Insert the jumper into the voltage connector nearest to the actual power supply voltage.

The jumper is factory-set to 440 V when shipped. If the power supply voltage is not 440 V, use the following procedure to change the setting.

1. Turn OFF the power supply and wait for at least 5 minutes.
2. Confirm that the CHARGE indicator has gone out.
3. Remove the terminal cover.
4. Insert the jumper at the position for the voltage supplied to the Drive (see *Fig 4.2*).
5. Return the terminal cover to its original position.

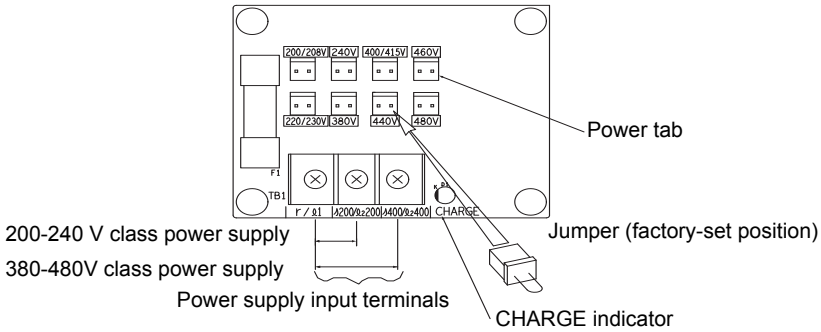

Fig 4.2 Power Supply Voltage Jumper

◆ Power ON

Confirm all of the following items and then turn ON the power supply.

- Check that the power supply is of the correct voltage.
  200-240 V class: 3-phase 200 to 240 Vdc, 50/60Hz
  380-480 V class: 3-phase 380 to 480 Vdc, 50/60Hz
- Make sure that the motor output terminals (U/T1, V/T2, W/T3) and the motor are connected correctly.
- Make sure that the Drive control circuit terminal and the control device are wired correctly.
- Set all Drive control circuit terminals to OFF.
- When using a PG Speed Control Card, make sure that it is wired correctly.
- Make sure that the motor is not connected to the mechanical system (no-load status)

◆ Checking the Display Status

If the Digital Operator's display at the time the power is connected is normal, it will read as follows:

Display for normal operation

```
-DRIVE-                    Rdy
     Frequency Ref
U1-01=  60.0 0Hz
U1-02=60.00Hz
U1-03=10.05A
```

The frequency reference monitor is displayed in the data display section.

When an fault has occurred, the details of the fault will be displayed instead of the above display. In that case, refer to *Chapter 7 Troubleshooting*. The following display is an example of a display for faulty operation.

Display for fault operation

```
-DRIVE-
        UV
DC  Bus  Undervolt
```

The display will differ depending on the type of fault.
A low voltage alarm is shown at left.

◆ Basic Settings

Switch to the quick programming mode ("QUICK" will be displayed on the LCD screen) and then set the following user parameters. Refer to *Chapter 3 Digital Operator and Modes* for Digital Operator operating procedures and to *Chapter 5 User Parameters* and *Chapter 6 Parameter Settings by Function* for details on the user parameters.

Parameters that must be set are listed in *Table 4.1* and those that are set according to the application are listed in *Table 4.2*.

Table 4.1 Parameters that Must Be Set

Parameter Number	Name	Description	Setting Range	Factory Setting
A1-02	Control method selection	Set the control method for the Drive. 0: V/f control 1: V/f control with PG 2: Open-loop vector control 1 3: Flux vector 4: Open-loop vector control 2	0 to 4	2
b1-01	Reference selection	Set the frequency reference input method. 0: Digital Operator 1: Control circuit terminal (analog input) 2: MODBUS communications 3: Option Card 4: Pulse train input	0 to 4	1
b1-02	Operation method selection	Set the run command input method. 0: Digital Operator 1: Control circuit terminal (sequence input) 2: MODBUS communications 3: Option Card	0 to 3	1
C1-01	Acceleration time 1	Set the acceleration time in seconds for the output frequency to climb from 0% to 100%.	0.0 to 6000.0	10.0 s
C1-02	Deceleration time 1	Set the deceleration time in seconds for the output frequency to fall from 100% to 0%.	0.0 to 6000.0	10.0 s
E1-01	Input voltage setting	Set the Drive's nominal input voltage in volts.	155 to 255 V (200-240 V class) 310 to 510 V (380-480 V class)	200 V (200-240 V class) 400 V (380-480 V class)
E2-01	Motor rated current	Set the motor rated current.	10% to 200% of Drive's rated current	Setting for general-purpose motor of same capacity as Drive
L1-01	Motor protection selection	Set to enable or disable the motor overload protection function using the electronic thermal relay. 0: Disabled 1: General motor protection 2: Drive motor protection 3: Vector motor protection	0 to 3	1

Table 4.2 Parameters that Are Set as Required

Parameter Number	Name	Description	Setting Range	Factory Setting
b1-03	Stopping method selection	Select stopping method when stop command is sent. 0: Deceleration to stop 1: Coast to stop 2: DC braking stop 3: Coast to stop with timer	0 to 3	0
C6-02	Carrier frequency selection	The carrier frequency is set low if the motor cable is 50 m or longer or to reduce radio noise or leakage current.	1 to F	Depends on capacity, voltage, and control mode.
C6-11	Carrier frequency selection for open-loop vector control 2		1 to 4	Depends on kVA setting.
d1-01 to d1-04 and d1-17	Frequency references 1 to 4 and jog frequency reference	Set the required speed references for multi-step speed operation or jogging.	0.00 to 400.00 Hz	d1-01 to d1-04: 0.00Hz d1-17: 6.00Hz
H4-02 and H4-05	FM and AM terminal output gain	Adjust when an instrument is connected to the FM or AM terminal.	0.0 to 1000.0	H4-02: 100% H4-05: 50%
L3-04	Stall prevention selection during deceleration	If using the dynamic brake option (braking resistor, Braking Resistor Units, and Braking Units), be sure to set parameter L3-04 to 0 (disabled) or 3 (enabled with braking resistor).	0 to 3	1

◆ Settings for the Control Methods

Autotuning methods depend on the control method set for the Drive. Make the settings required by the control method.

■Overview of Settings

Make the required settings in quick programming mode and autotuning mode according to the following flow-chart.

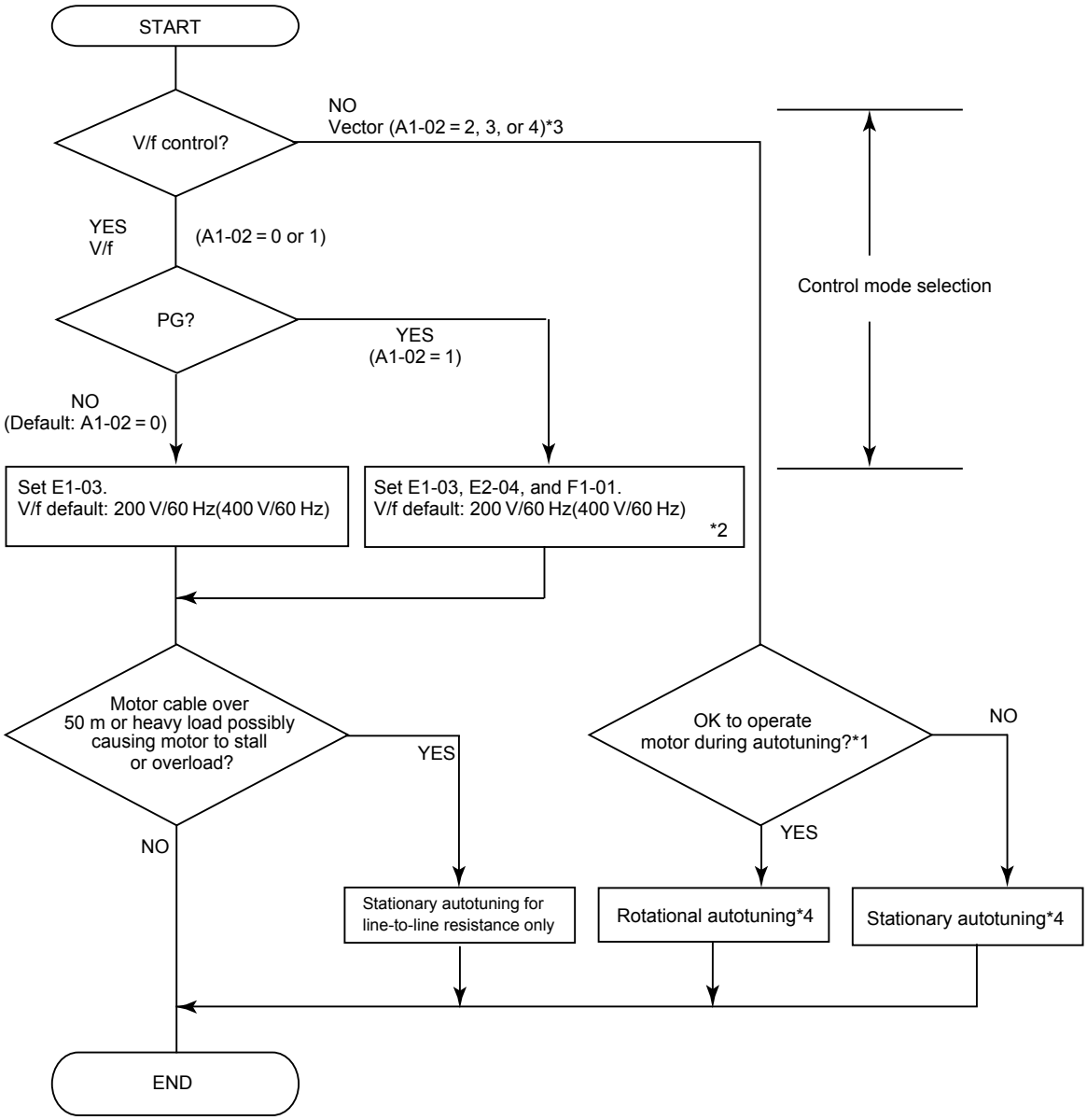

Note If the motor cable changes to 50 m or longer for the actual installation, perform stationary autotuning for the line-to-line resistance only on-site.

* 1. Use rotational autotuning to increase autotuning accuracy whenever it is okay for the motor to be operated. Always perform rotational autotuning when using open-loop vector control 2.

* 2. If there is a reduction gear between the motor and PG, set the reduction ratio in F1-12 and F1-13.

* 3. The default setting of the Drive is for open-loop vector control 1 (A1-02 = 2).

* 4. If the maximum output frequency and base frequency are different, set the maximum output frequency (E1-04) after autotuning.

Fig 4.3 Settings According to the Control Method

■Setting the Control Method

Any of the following five control methods can be set.

Control Mode	Parameter Setting	Basic Control	Main Applications
V/f control	A1-02 = 0	Voltage/frequency ratio fixed control	Variable speed control, particularly control of multiple motors with one Drive and replacing existing drives
V/f control with PG	A1-02 = 1	Voltage/frequency ratio fixed control with speed compensation using a PG	Applications requiring high-precision speed control using a PG on the machine side
Open-loop vector control 1	A1-02 = 2 (factory setting)	Current vector control without a PG	Variable speed control, applications requiring speed and torque accuracy using vector control without a PG
Flux vector control	A1-02 = 3	Flux vector control	Very high-performance control with a PG (simple servo drives, high-precision speed control, torque control, and torque limiting)
Open-loop vector control 2	A1-02 = 4	Current vector control without a PG with an ASR (speed controller) (Always perform rotational autotuning.)	Very high-performance control without a PG (torque control without a PG, torque limiting, applications requiring a 1:200 speed control range without a PG)

Note With vector control, the motor and Drive must be connected 1:1. The motor capacity for which stable control is possible is 50% to 100% of the capacity of the Drive.

PG Control without PG (A1-02 = 0)

- Set either one of the fixed patterns (0 to E) in E1-03 (V/f Pattern Selection) or set F in E1-03 to specify a user-set pattern as required for the motor and load characteristics in E1-04 to E1-13 in advanced programming mode.

  Simple operation of a general-purpose motor at 50Hz: E1-03 = 0

  Simple operation of a general-purpose motor at 60Hz: E1-03 = F (default) or 1
  If E1-03 = F, the default setting in the user setting from E1-04 to E1-13 are for 60Hz

- Perform stationary autotuning for the line-to-line resistance only if the motor cable is 50 m or longer for the actual installation or the load is heavy enough to produce stalling. Refer to the following section on *Autotuning* for details on stationary autotuning.

V/f Control with PG (A1-02 = 1)

- Set either one of the fixed patterns (0 to E) in E1-03 (V/f Pattern Selection) or set F in E1-03 to specify a user-set pattern as required for the motor and load characteristics in E1-04 to E1-13 in advanced programming mode.

  Simple operation of a general-purpose motor at 50Hz: E1-03 = 0

  Simple operation of a general-purpose motor at 60Hz: E1-03 = F (default) or 1
  If E1-03 = F, the default setting in the user setting from E1-04 to E1-13 are for 60Hz

- Set the number of motor poles in E2-04 (Number of Motor Poles)

- Set the number of rotations per pulse in F1-01 (PG Constant). If there is a reduction gear between the motor and PG, set the reduction ratio in F1-12 and F1-13 in advanced programming mode.
- Perform stationary autotuning for the line-to-line resistance only if the motor cable is 50 m or longer for the actual installation or the load is heavy enough to produce stalling. Refer to the following section on *Autotuning* for details on stationary autotuning.

Open-loop Vector Control 1 (A1-02 = 2)

Perform autotuning. If the motor can be operated, perform rotational autotuning. If the motor cannot be operated, perform stationary autotuning. Refer to the following section on *Autotuning* for details on autotuning.

Flux Vector Control (A1-02 = 3)

Perform autotuning. If the motor can be operated, perform rotational autotuning. If the motor cannot be operated, perform stationary autotuning. Refer to the following section on *Autotuning* for details on autotuning.

Open-loop Vector Control 2 (A1-02 = 4)

Perform autotuning. Be sure to perform rotational autotuning. Refer to the following section on *Autotuning* for details on autotuning.

◆ Autotuning

Use the following procedure to perform autotuning to automatically set motor parameters when using the vector control method, when the cable length is long, etc.

■ Setting the Autotuning Mode

One of the following three autotuning modes can be set.

- Rotational autotuning
- Stationary autotuning
- Stationary autotuning for line-to-line resistance only

Always confirm the precautions before autotuning before performing autotuning.

Rotational Autotuning (T1-01 = 0)

Rotational autotuning is used only for open-vector control. Set T1-01 to 0, input the data from the nameplate, and then press the RUN Key on the Digital Operator. The Drive will stop the motor for approximately 1 minute and then set the required motor parameters automatically while operating the motor for approximately 1 minute.

Stationary Autotuning (T1-01 = 1)

Stationary autotuning is used for open-vector control or flux vector control. Set T1-01 to 1, input the data from the nameplate, and then press the RUN Key on the Digital Operator. The Drive will supply power to the stationary motor for approximately 1 minute and some of the motor parameters will be set automatically. The remaining motor parameters will be set automatically the first time operation is started in drive mode.

Stationary Autotuning for Line-to-Line Resistance Only (T1-01 = 2)

Stationary autotuning for line-to-line resistance only can be used in any control method. This is the only autotuning possible for V/f control and V/f control with PG modes.

Autotuning can be used to prevent control errors when the motor cable is long (50 m or longer) or the cable length has changed since installation or when the motor and Drive have different capacities.

Set T1-01 to 2 for open-loop vector control, and then press the RUN Key on the Digital Operator. The Drive will supply power to the stationary motor for approximately 20 seconds and the Motor Line-to-Line Resistance (E2-05) and cable resistance will be automatically measured.

■ Precautions Before Using Autotuning

Read the following precautions before using autotuning.

- Autotuning the Drive is fundamentally different from autotuning the servo system. Drive autotuning automatically adjusts parameters according to detected motor parameters, whereas servo system autotuning adjusts parameters according to the detected size of the load.
- When speed precision or torque precision is required at high speeds (i.e., 90% of the rated speed or higher), use a motor with a rated voltage that is 20 V less than the input power supply voltage of the Drive for 200-240V-class Drives and 40 V less for 380-480V-class Drives. If the rated voltage of the motor is the same as the input power supply voltage, the voltage output from the Drive will be unstable at high speeds and sufficient performance will not be possible.
- Use stationary autotuning whenever performing autotuning for a motor that is connected to a load.
- Use rotational autotuning whenever performing autotuning for a motor that has fixed output characteristics, when high precision is required, or for a motor that is not connected to a load.
- If rotational autotuning is performed for a motor connected to a load, the motor parameters will not be found accurately and the motor may exhibit abnormal operation. Never perform rotational autotuning for a motor connected to a load.
- If the wiring between the Drive and motor changes by 50 m or more between autotuning and motor installation, perform stationary autotuning for line-to-line resistance only.
- If the motor cable is long (50 m or longer), perform stationary autotuning for line-to-line resistance only even when using V/f control.
- The status of the multi-function inputs and multi-function outputs will be as shown in the following table during autotuning. When performing autotuning with the motor connected to a load, be sure that the holding brake is not applied during autotuning, especially for conveyor systems or similar equipment.

Tuning Mode	Multi-function Inputs	Multi-function Outputs
Rotational autotuning	Do not function.	Same as during normal operation
Stationary autotuning	Do not function.	Maintain same status as when autotuning is started.
Stationary autotuning for line-to-line resistance only	Do not function.	Maintain same status as when autotuning is started.

- To cancel autotuning, always use the STOP Key on the Digital Operator.

IMPORTANT

1. Power will be supplied to the motor when stationary autotuning is performed even though the motor will not turn. Do not touch the motor until autotuning has been completed.
2. When performing stationary autotuning connected to a conveyor or other machine, ensure that the holding brake is not activated during autotuning.

■Precautions for Rotational and Stationary Autotuning

Lower the base voltage based on *Fig 4.4* to prevent saturation of the Drive's output voltage when the rated voltage of the motor is higher than the voltage of the power supply to the Drive. Use the following procedure to perform autotuning.

1. Input the voltage of the input power supply to T1-03 (Motor rated voltage).
2. Input the results of the following formula to T1-05 (Motor base frequency):
   (Base frequency from the motor's nameplate × setting of T1-03)/(Rated voltage from motor's nameplate)
3. Perform autotuning.

After completing autotuning, set E1-04 (Max. output frequency) to the base frequency from the motor's nameplate.

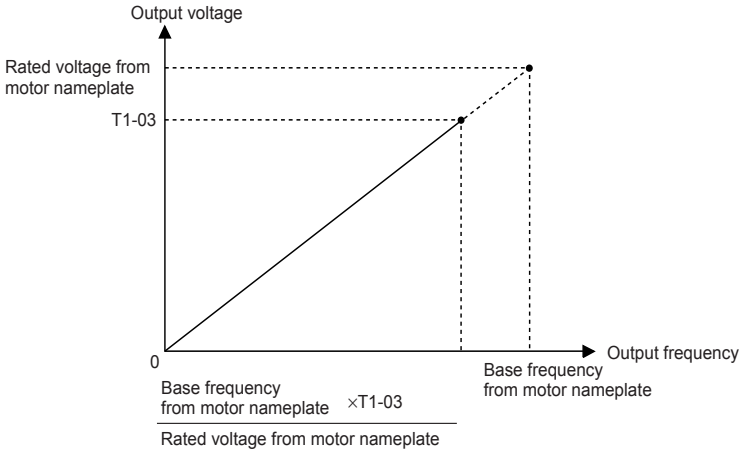

Fig 4.4 Motor Base Frequency and Drive Input Voltage Setting

IMPORTANT

1. When speed precision is required at high speeds (i.e., 90% of the rated speed or higher), set T1-03 (Motor rated voltage) to the input power supply voltage × 0.9.
2. When operating at high speeds (i.e., 90% of the rated speed or higher), the output current will increase as the input power supply voltage is reduced. Be sure to provide sufficient margin in the Drive current.

■Precautions after Rotational and Stationary Autotuning

If the maximum output frequency and base frequency are different, set the maximum output frequency (E1-04) after autotuning.

■ Parameter Settings for Autotuning

The following parameters must be set before autotuning.

Table 4.3 Parameter Settings before Autotuning

Parameter Number	Name: Display	Display	Setting Range	Factory Setting	Data Displays during Autotuning: V/f	V/f with PG	Open-loop Vector 1	Flux Vector	Open-loop Vector 2
T1-00	Motor 1/2 selection*1 Select Motor	When switching to motor 2 is selected, set the motor for which autotuning is to be performed. (This parameter is ignored if motor 2 is not selected.) 1: Motor 1 2: Motor 2	1 or 2	1	Yes	Yes	Yes	Yes	Yes
T1-01	Autotuning mode selection Tuning Mode Sel	Set the autotuning mode. 0: Rotational autotuning 1: Stationary autotuning 2: Stationary autotuning for line-to-line resistance only	0 to 2	2 (V/f) 0 (Vector)*4	Yes	Yes	Yes	Yes	Yes
T1-02	Motor output power Mtr Rated Power	Set the output power of the motor in kilowatts.*5 *7	0.00 to 650.00 kW	0.40 kW *2	Yes	Yes	Yes	Yes	Yes
T1-03	Motor rated voltage Rated Voltage	Set the rated voltage of the motor in volts.*5 *6	0 to 255.0 V (200-240 V class) 0 to 510.0 V (380-480 V class)	200.0 V (200-240 V class) 400.0 V (380-480 V class)	-	-	Yes	Yes	Yes
T1-04	Motor rated current Rated Current	Set the rated current of the motor in amps.*5 *7	0.32 to 6.40 A*3	1.90 A*2	Yes	Yes	Yes	Yes	Yes
T1-05	Motor base frequency Rated Frequency	Set the base frequency of the motor in hertz.*3 *4 *5 *6	0 to 400.0 Hz	60.0Hz	-	-	Yes	Yes	Yes

Table 4.3 Parameter Settings before Autotuning(Continued)

Parameter Number	Name: Display	Display	Setting Range	Factory Setting	Data Displays during Autotuning: V/f	V/f with PG	Open-loop Vector 1	Flux Vector	Open-loop Vector 2
T1-06	Number of motor poles Number of Poles	Set the number of motor poles.	2 to 48 poles	4 poles	-	-	Yes	Yes	Yes
T1-07	Motor base speed Rated Speed	Set the base speed of the motor in min^{-1}. *3 *5	0 to 24000	1750 min^{-1}	-	-	Yes	Yes	Yes
T1-08	Number of PG pulses when turning PG Pulses/ Rev	Set the number of pulses for the PG (pulse generator or encoder). Set the number of pulses per motor revolution without a multiplication factor.	0 to 60000	600	-	Yes	-	Yes	-

* 1. Not normally displayed. Displayed only when a motor switch command is set for a multi-function digital input (one of H1-01 to H1-05 set to 16).
* 2. The factory setting depends on the Drive capacity. Values are given for a 200-240 V class, 0.4 kW Drive.
* 3. The setting range is 10% to 200% of the Drive capacity.
* 4. For V/f control, the only setting that is possible is 2 (stationary autotuning for line-to-line resistance only).
* 5. For fixed output motors, set the base speed value.
* 6. For drive motors or for specialized vector motors, the voltage or frequency may be lower than for general-purpose motors. Always confirm the information on the nameplate or in test reports. If the no-load values are known, input the no-load voltage in T1-03 and the no-load current in T1-05 to ensure accuracy.
* 7. The settings that will ensure stable vector control are between 50% and 100% of the Drive rating.

Refer to page 3-15 for Digital Operator displays during autotuning.

◆ Application Settings

User parameters are set as required in advanced programming mode ("ADV" will be displayed on the LCD screen). All the parameters that can be set in quick programming mode can also be displayed and set in advanced programming mode.

■Setting Examples

The following are examples of settings for applications.

- When using an Drive-mounted braking resistor (ERF), set L8-01 to 1 to enable ERF braking resistor overheating protection.
- To prevent the machine from being operated in reverse, set b1-04 to 1 to disable reverse operation.
- To increase the speed of a 60Hz motor by 10%, set E1-04 to 66.0Hz.
- To use a 0 to 10-V analog signal for a 60Hz motor for variable-speed operation between 0 and 54Hz (0% to 90% speed deduction), set H3-02 to 90.0%.
- To control speed between 20% and 80% to ensure smooth gear operation and limit the maximum speed of the machine, set d2-01 to 80.0% and set d2-02 to 20.0%.

◆ No-load Operation

To being no-load operation (without connecting the machine and the motor), press the LOCAL/REMOTE Key on the Digital Operator to change to LOCAL mode (the SEQ and REF indicators on the Digital Operator should be OFF).

Always confirm safety around the motor and machine before starting Drive operation from the Digital Operator. Confirm that the motor works normally and that no errors are displayed at the Drive.

Jog Frequency Reference (d1-17, default: 6.00Hz) can be started and stopped by pressing and releasing the JOG Key on the Digital Operator. If the external sequence prevent operation from the Digital Operator, confirm that emergency stop circuits and machine safety mechanisms are functioning, and then start operation in REMOTE mode (i.e., with a signal from the control signal terminals). The safety precautions must always be taken before starting the Drive with the motor connected to the machine.

INFO

Both a RUN command (forward or reverse) and a frequency reference (or multi-step speed reference) must be provided to start Drive operation.
Input these commands and reference regardless of the operation method (i.e., LOCAL of REMOTE).

◆ Loaded Operation

Connect the machine to the motor and then start operation as described for no-load operation (i.e., from the Digital Operator or by using control circuit terminal signals).

■Connecting the Load

- After confirming that the motor has stopped completely, connect the mechanical system.
- Be sure to tighten all the screws when securing the motor shaft to the mechanical system.

■Operation using the Digital Operator

- Use the Digital Operator to start operation in LOCAL mode in the same way as in no-load operation.
- If fault occurs during operation, make sure the STOP Key on the Digital Operator is easily accessible.
- At first, set the frequency reference to a low speed of one tenth the normal operating speed.

■ Checking Operating Status

- Having checked that the operating direction is correct and that the machine is operating smoothly at slow speed, increase the frequency reference.
- After changing the frequency reference or the rotation direction, check that there is no oscillation or abnormal sound from the motor. Check the monitor display to ensure that U1-03 (Output Current) is not too high.
- Refer to *Adjustment Suggestions* on page 4-17 if hunting, vibration, or other problems originating in the control system occur.

◆ Check and Recording User Parameters

Use verify mode ("VERIFY" will be displayed on the LCD screen) to check user parameters that have been changed for trial operation and record them in a user parameter table.

Any user parameters that have been change by autotuning will also be displayed in verify mode.

If required, the copy function in parameters o3-01 and o3-02 displayed in advanced programming mode can be used to copy the changed settings from the Drive to a recording area in the Digital Operator. If changed settings are saved in the Digital Operator, they can be easily copied back to the Drive to speed up system recovery if for any reason the Drive has to be replaced.

The following functions can also be used to manage user parameters.

- Recording user parameters
- Setting access levels for user parameters
- Setting a password

■ Recording User Parameters (o2-03)

If o2-03 is set to 1 after completing trial operation, the settings of user parameters will be saved in a separate memory area in the Drive. Later, after Drive settings have been changed, the user parameters can be initialized to the settings saved in the separate memory area when o2-03 was set to 1 by setting A1-03 (Initialize) to 1110.

■User Parameter Access Levels (A1-01)

A1-01 can be set to 0 (monitoring-only) to prevent user parameters from being changed. A1-01 can also be set to 1 (User-specified Parameters) and used along with A2 parameters to display only parameters required by the machine or application in a programming mode.

■Password (A1-04 and A1-05)

When the access level is set to monitoring-only (A1-01 = 0), a password can be set so that user parameters will be displayed only when the correct password is input.

Adjustment Suggestions

If hunting, vibration, or other problems originating in the control system occur during trial operation, adjust the parameters listed in the following table according to the control method. This table lists only the most commonly used user parameters.

Table 4.4 Adjusted User Parameters

Control Method	Name (Parameter Number)	Performance	Factory Setting	Recommended Setting	Adjustment Method
V/f control (A1-02 = 0 or 1)	Hunting-prevention gain (N1-02)	Controlling hunting and vibration in middle-range speeds (10 to 40 Hz)	1.00	0.50 to 2.00	• Reduce the setting if torque is insufficient for heavy loads. • Increase the setting if hunting or vibration occurs for light loads.
	Carrier frequency selection (C6-02)	• Reducing motor magnetic noise • Controlling hunting and vibration at low speeds	Depends on capacity	0 to default	• Increase the setting if motor magnetic noise is high. • Reduce the setting if hunting or vibration occurs at low to middle-range speeds.
	Torque compensation primary delay time constant (C4-02)	• Increasing torque and speed response • Controlling hunting and vibration	Depends on capacity	200 to 1000ms	• Reduce the setting if torque or speed response is slow. • Increase the setting if hunting or vibration occurs.
	Torque compensation gain (C4-01)	• Improving torque at low speeds (10 Hz or lower) • Controlling hunting and vibration	1.00	0.50 to 1.50	• Increase the setting if torque is insufficient at low speeds. • Reduce the setting if hunting or vibration occurs for light loads.
	Middle output frequency voltage (E1-08) Minimum output frequency voltage (E1-10)	• Improving torque at low speeds • Controlling shock at startup	Depends on capacity and voltage	Default to Default + 3 to 5 V*	• Increase the setting if torque is insufficient at low speeds. • Reduce the setting if shock at startup is large.

Table 4.4 Adjusted User Parameters (Continued)

Control Method	Name (Parameter Number)	Performance	Factory Setting	Recommended Setting	Adjustment Method
Open-loop vector control (A1-02 = 2)	Speed feedback detection control (AFR) gain (N2-01)	• Increasing torque and speed response • Controlling hunting and vibration in middle-range speeds (10 to 40 Hz)	1.00	0.50 to 2.00	• Reduce the setting if torque or speed response is slow. • Increase the setting if hunting or vibration occurs.
	Torque compensation primary delay time constant (C4-02)	• Increasing torque and speed response • Controlling hunting and vibration	20ms	20 to 100ms	• Reduce the setting if torque or speed response is slow. • Increase the setting if hunting or vibration occurs.
	Slip compensation primary delay time (C3-02)	• Increasing speed response • Improving speed stability	200ms	100 to 500ms	• Reduce the setting if speed response is slow. • Increase the setting if the speed is not stable.
	Slip compensation gain (C3-01)	• Improving speed accuracy	1.0	0.5 to 1.5	• Increase the setting if speed response is slow. • Reduce the setting if the speed is too fast.
Open-loop vector control 1 (A1-02 = 2)	Carrier frequency selection (C6-02)	• Reducing motor magnetic noise • Controlling hunting and vibration at low speeds (10Hz or less)	Depends on capacity	0 to default	• Increase the setting if motor magnetic noise is high. • Reduce the setting if hunting or vibration occurs at low speeds.
	Middle output frequency voltage (E1-08) Minimum output frequency voltage (E1-10)	• Improving torque at low speeds • Controlling shock at startup	Depends on capacity and voltage	Default to Default + 1 or 2 V*	• Increase the setting if torque or speed response is slow. • Reduce the setting if shock at startup is large.

Table 4.4 Adjusted User Parameters (Continued)

Control Method	Name (Parameter Number)	Performance	Factory Setting	Recommended Setting	Adjustment Method
Flux vector control (A1-02 = 3)	ASR proportional gain 1 (C5-01) and ASR proportional gain 2 (C5-03)	• Torque and speed response • Controlling hunting and vibration	20.00	10.00 to 50.00	• Increase the setting if torque or speed response is slow. • Reduce the setting if hunting or vibration occurs.
	ASR integral time 1 (high-speed) (C5-02) and ASR integral time 2 (low-speed) (C5-04)	• Torque and speed response • Controlling hunting and vibration	0.500sec	0.300 to 1.000sec	• Reduce the setting if torque or speed response is slow. • Increase the setting if hunting or vibration occurs.
	ASR switching frequency (C5-07)	Switching the ASR proportional gain and integral time according to the output frequency	0.0Hz	0.0 to max. output frequency	Set the output frequency at which to change the ASR proportional gain and integral time when the same values cannot be used for both high-speed and low-speed operation.
	ASR primary delay time (C5-06)	• Controlling hunting and vibration	0.004sec	0.004 to 0.020	Increase the setting if machine rigidity is low and the system vibrates easily.
	Carrier frequency selection (C6-02)	• Reducing motor magnetic noise • Controlling hunting and vibration at low speeds (3Hz or less)	Depends on the capacity.	2.0 kHz to default	• Increase the setting if motor magnetic noise is high. • Reduce the setting if hunting or vibration occurs at low to middle-range speeds.

Table 4.4 Adjusted User Parameters (Continued)

Control Method	Name (Parameter Number)	Performance	Factory Setting	Recommended Setting	Adjustment Method
Open-loop vector control 2 (A1-02 = 4)	ASR proportional gain 1 (C5-01) and ASR proportional gain 2 (C5-03)	• Torque and speed response • Controlling hunting and vibration	10.00	10.00 to 50.00	• Increase the setting if torque or speed response is slow. • Reduce the setting if hunting or vibration occurs.
	ASR integral time 1 (high-speed) (C5-02) and ASR integral time 2 (low-speed) (C5-04)	• Torque and speed response • Controlling hunting and vibration	0.500sec	0.300 to 1.000sec	• Reduce the setting if torque or speed response is slow. • Increase the setting if hunting or vibration occurs.
	ASR switching frequency (C5-07)	Switching the ASR proportional gain and integral time according to the output frequency	0.0Hz	0.0 to max. output frequency	Set the output frequency at which to change the ASR proportional gain and integral time when the same values cannot be used for both high-speed and low-speed operation.
	ASR primary delay time (C5-06)	• Controlling hunting and vibration	0.010sec	0.04 to 0.020	Increase the setting if machine rigidity is low and the system vibrates easily.
	Carrier frequency selection (C6-11)	• Reducing motor magnetic noise • Controlling hunting and vibration at low speeds (3Hz or less)	Depends on the capacity.	Default value	• Increase the setting if motor magnetic noise is high. • Reduce the setting if hunting or vibration occurs at low to middle-range speeds.

* The setting is given for 200-240 V Class Drives. Double the voltage for 380-480V Class Drives.

- Do not change the Torque Compensation Gain (C4-01) from its default setting of 1.00 when using open-loop vector control 1.
- If speeds are inaccurate during regeneration in open-loop vector control 1, enable Slip Compensation During Regeneration (C3-04 = 1).
- Use slip compensation to improve speed precision during V/f control (A1-02 = 0).
  Set the Motor Rated Current (E2-01), Motor Rated Slip (E2-02), and Motor No-load Current (E2-03), and then adjust the Slip Compensation Gain (C3-01) to between 0.5 and 1.5. The default setting for V/f control is C3-01 = 0.0 (slip compensation disabled).
- To improve speed response and stability in V/f control with a PG (A1-02 = 1), set the ASR parameters (C5-01 to C5-05) to between 0.5 and 1.5 times the default. (It is not normally necessary to adjust this setting.) ASR for V/f control with a PG will only control the output frequency; a high gain, such as is possible for open-loop vector control 2 or flux vector control, cannot be set.

The following user parameters will also indirectly affect the control system.

Table 4.5 Parameters Indirectly Affecting Control and Applications

Name (Parameter Number)	Application
Dwell function (b6-01 to b6-04)	Used for heavy loads or large machine backlashes.
Droop function (b7-01 to b7-02)	Used to soften the torque or to balance the load between two motors. Can be used when the control mode (A1-02) is set to 3 or 4.
Acceleration/deceleration times (C1-01 to C1-11)	Adjust torque during acceleration and deceleration.
S-curve characteristics (C2-01 to C2-04)	Used to prevent shock when completing acceleration.
Jump frequencies (d3-01 to d3-04)	Used to avoid resonance points during operation.
Analog input filter time constant (H3-12)	Used to prevent fluctuations in analog input signals caused by noise.
Stall prevention (L3-01 to L3-06)	Used to prevent 0 V (overvoltage errors) and motor stalling for heavy loads or rapid acceleration/deceleration. Stall prevention is enabled by default and the setting does not normally need to be changed. When using a braking resistor, however, disable stall prevention during deceleration by setting L3-04 to 0.
Torque limits (L7-01 to L7-04)	Set the maximum torque during vector control. If a setting is increased, use a motor with higher capacity than the Drive. If a setting is reduced, stalling can occur under heavy loads.
Feed forward control (N5-01 to N5-03)	Used to increase response for acceleration/deceleration or to reduce over-shooting when there is low machine rigidity and the gain of the speed controller (ASR) cannot be increased. The inertia ratio between the load and motor and the acceleration time of the motor running alone must be set.

5

User Parameters

This chapter describes all user parameters that can be set in the Drive.

User Parameter Descriptions.....5-2
Digital Operator Display Functions and Levels.....5-3
User Parameter Tables.....5-10

User Parameter Descriptions

This section describes the contents of the user parameter tables.

◆ Description of User Parameter Tables

User parameter tables are structured as shown below. Here, b1-01 (Frequency Reference Selection) is used as an example.

Parameter Number	Name: Display	Description	Setting Range	Factory Setting	Change during Operation	Control Methods: V/f	V/f with PG	Open-loop Vector 1	Flux Vector	Open Loop Vector 2	MODBUS Register
b1-01	Reference selection Reference Source	Selects the frequency reference input source. 0: Operator - Digital preset speed U1-01 or d1-01 to d1-17. 1: Terminals - Analog input terminal A1 (or terminal A2 based on parameter H3-09). 2: Serial Com - Modbus RS-422/485 terminals R+, R-, S+, and S-. 3: Option PCB - Option board connected on 2CN. 4: Pulse Input (Terminal RP)	0 to 4	1	No	Q	Q	Q	Q	Q	180H

- Parameter Number: The number of the user parameter.
- Parameter Name: The name of the user parameter.
- Description: Details on the function or settings of the user parameter.
- Setting Range: The setting range for the user parameter.
- Factory Setting: The factory setting (each control method has its own factory setting. Therefore the factory setting changes when the control method is changed.)
  Refer to page 5-96 for factory settings by control method.
- Change during Operation: Indicates whether or not the parameter can be changed while the Drive is in operation.
  - Yes: Changes possible during operation.
  - No: Changes not possible during operation.
- Control Methods: Indicates the control methods in which the user parameter can be monitored or set.
  - Q: Items which can be monitored and set in either quick programming mode or advanced programming mode.
  - A: Items which can be monitored and set only in advanced programming mode.
  - No: Items which cannot be monitored or set for the control method.
- MODBUS Address: The register number used for MODBUS communications.
- Page: Reference page for more detailed information on the parameter.

Digital Operator Display Functions and Levels

The following figure shows the Digital Operator display hierarchy for the Drive.

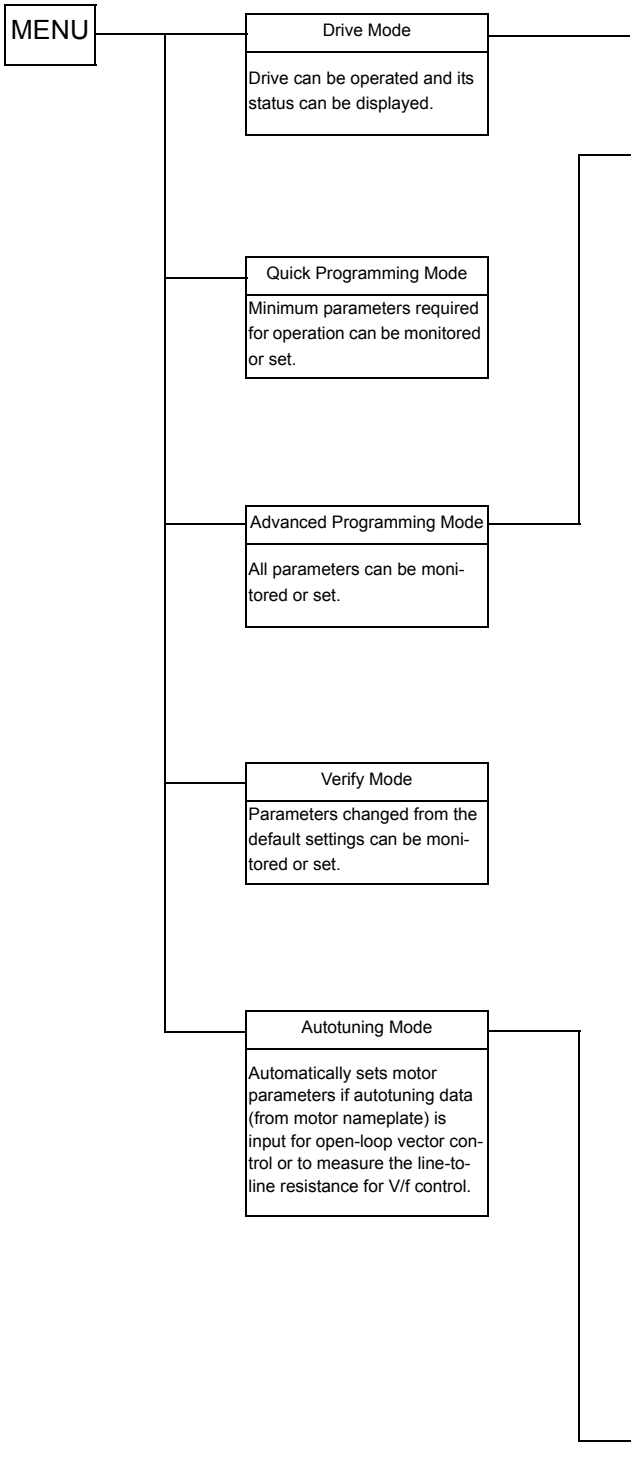

No.	Function	Display
U1	Status Monitor Parameters	Monitor
U2	Fault Trace	Fault Trace
U3	Fault History	Fault History
A1	Initialize Mode	Initialization
A2	User-specified Setting Mode	User Parameters
b1	Operation Mode Selections	Sequence
b2	DC Injection Braking	DC Braking
b3	Speed Search	Speed Search
b4	Timer Function	Delay Timers
b5	PID Control	PID Control
b6	Dwell Functions	PID Control
b7	Droop Control	Droop Control
b8	Energy Saving	Energy Saving
b9	Zero Servo	Zero Servo
C1	Acceleration/Deceleration	Accel/Decel
C2	S-curve Acceleration/Deceleration	S-Curve Accel
C3	Motor Slip Compensation	Motor-Slip Comp
C4	Torque Compensation	Torque Comp
C5	Speed Control (ASR)	ASR Tuning
C6	Carrier Frequency	Carrier Freq
d1	Preset Reference	Preset Reference
d2	Reference Limits	Reference Limits
d3	Jump Frequencies	Jump Frequencies
d4	Reference Frequency Hold	Sequence
d5	Torque Control	Torque Control
d6	Field Control	Field-weakening
E1	V/f Pattern	V/f Pattern
E2	Motor Setup	Motor Setup
E3	Motor 2 V/f Pattern	V/f Pattern 2
E4	Motor 2 Setup	Motor Setup 2
F1	PG Option Setup	PG Option Setup
F2	Analog Reference Card	AI-14 Setup
F3	Digital Reference Card	DI-08, 16 Setup
F4	Analog Monitor Cards	AO-08, 12 Setup
F5	Digital Output Card	DO-02,08 Setup
F6	Communications Option Card	CP-916 Setup
H1	Multi-function Contact Inputs	Digital Inputs
H2	Multi-function Contact Outputs	Digital Outputs
H3	Analog Inputs	Analog Inputs
H4	Multi-function Analog Outputs	Analog Outputs
H5	MODBUS Communications	Serial Com Setup
H6	Pulse Train	Pulse I/O Setup
L1	Motor Overload	Motor Overload
L2	Power Loss Ridethrough	PwrLoss Ridethru
L3	Stall Prevention	Stall Prevention
L4	Reference Detection	Ref Detection
L5	Fault Restart	Fault Restart
L6	Torque Detection	Torque Detection
L7	Torque Limits	Torque Limit
L8	Hardware Protection	Hdwe Protection
n1	Hunting Prevention Function	Hunting Prev
n2	Speed Feedback Protection Control	AFR
n3	High-slip Braking	High Slip
n4	Speed Estimation	Observer
n5	Feed Forward	Feedfoward Cont
o1	Monitor Select	Monitor Select
o2	Multi-function Selections	Key Selections
o3	Copy Function	COPY Function
T1	Motor Autotuning	Auto-Tuning

◆ User Parameters Settable in Quick Programming Mode

The minimum user parameters required for Drive operation can be monitored and set in quick programming mode. The user parameters displayed in quick programming mode are listed in the following table. These, and all other user parameters, are also displayed in advanced programming mode.

Refer to the overview of modes on page 3-5 for an overview of quick programming mode.

Parameter Number	Name: Display	Description	Setting Range	Factory Setting	Change during Operation	Control Methods: V/f	V/f with PG	Open-loop Vector 1	Flux Vector	Open Loop Vector 2	MODBUS Register
A1-02	Control Method Selection / Control Method	Selects the Control Method of the Drive. 0: V/F control without PG 1: V/F control with PG 2: Open Loop Vector 3: Flux Vector (Closed Loop Vector) 4: Vector 2 wo/PG Note: Does not return to factory setting when drive is initialized.	0 to 4	2	No	Q	Q	Q	Q	Q	102H
b1-01	Frequency Reference Selection / Reference Source	Selects the frequency reference input source. 0: Operator - Digital preset speed U1-01 or d1-01 to d1-17. 1: Terminals - Analog input terminal A1 (or terminal A2 based on parameter H3-09). 2: Serial Com - Modbus RS-422/485 terminals R+, R-, S+, and S-. 3: Option PCB - Option board connected on 2CN. 4: Pulse Input (Terminal RP)	0 to 4	1	No	Q	Q	Q	Q	Q	180H
b1-02	Run Command Selection / Run Source	Selects the run command input source. 0: Operator - RUN and STOP keys on Digital Operator. 1: Terminals - Contact closure on terminals S1 or S2. 2: Serial Com - Modbus RS-422/485 terminals R+, R-, S+, and S-. 3: Option PCB - Option board connected on 2CN.	0 to 3	1	No	Q	Q	Q	Q	Q	181H
b1-03	Stopping Method Selection / Stopping Method	Selects the stopping method when the run command is removed. 0: Ramp to Stop 1: Coast to Stop 2: DC Injection to Stop 3: Coast with Timer (A new run command is ignored if received before the timer expires).	0 to 3 *13	0	No	Q	Q	Q	Q	Q	182H
C1-01	Acceleration Time 1 / Accel Time 1	Sets the time to accelerate from zero to maximum frequency.	0.0 to 6000.0 *1	10.0 s	Yes	Q	Q	Q	Q	Q	200H
C1-02	Deceleration Time 1 / Decel Time 1	Sets the time to decelerate from maximum frequency to zero.			Yes	Q	Q	Q	Q	Q	201H

Parameter Number	Name: Display	Description	Setting Range	Factory Setting	Change during Operation	Control Methods: V/f	V/f with PG	Open-loop Vector 1	Flux Vector	Open Loop Vector 2	MODBUS Register
C6-02	Carrier Frequency Selection Carrier Freq Sel	Selects the number of pulses per second of the output voltage waveform. Setting range determined by C6-01 setting. 0: Low noise 1: Fc = 2.0 kHz 2: Fc = 5.0 kHz 3: Fc = 8.0 kHz 4: Fc = 10.0 kHz 5: Fc = 12.5 kHz 6: Fc = 15.0 kHz OF: Program (Determined by the settings of C6-03 thru C6-05)	0 to F	6 *2	No	Q	Q	Q	Q	- *12	224H
C6-11	Carrier Frequency for Open-loop Vector Control 2 Carrier Freq Sel	Selects the carrier frequency during Vector Control 2 wo/PG. 1: 2kHz (3-phase modulation) 2: 4kHz (3-phase modulation) 3: 6kHz (3-phase modulation) 4: 8kHz (3-phase modulation)	1 to 4	4 *2	No	- *12	- *12	- *12	- *12	Q	22DH
d1-01	Frequency Reference 1 Reference 1	Setting units are affected by o1-03.	0 to 400.00 *9	0.00Hz	Yes	A	A	A	A	A	280H
d1-02	Frequency Reference 2 Reference 2	Frequency reference when multi-function input "Multi-step speed reference 1" is ON. Setting units are affected by o1-03.		0.00Hz	Yes	A	A	A	A	A	281H
d1-03	Frequency Reference 3 Reference 3	Frequency reference when multi-function input "Multi-step speed reference 2" is ON. Setting units are affected by o1-03.		0.00Hz	Yes	A	A	A	A	A	282H
d1-04	Frequency Reference 4 Reference 4	Frequency reference when multi-function input "Multi-step speed reference 1, 2" is ON. Setting units are affected by o1-03.		0.00Hz	Yes	A	A	A	A	A	283H
d1-17	Jog Frequency Reference Jog Reference	Frequency reference when: "Jog frequency reference" is selected via multi-function input terminals. "Jog frequency reference" has priority over "multi-step speed reference 1 to 4". Parameter d1-17 is also the reference for the JOG key on the Digital Operator, and the multi-function inputs "forward jog" and "reverse jog". Setting units are affected by o1-03.		6.00Hz	Yes	Q	Q	Q	Q	Q	292H

Parameter Number	Name: Display	Description	Setting Range	Factory Setting	Change during Operation	Control Methods: V/f	V/f with PG	Open-loop Vector 1	Flux Vector	Open Loop Vector 2	MODBUS Register
E1-01	Input Voltage Setting Input Voltage	Set to the nominal voltage of the incoming line. Sets the maximum and base voltage used by preset V/F patterns (E1-03 = 0 to E), adjusts the levels of Drive protective features (e.g. Overvoltage, braking resistor turn-on, stall prevention, etc.). NOTE: DRIVE INPUT VOLTAGE (NOT MOTOR VOLTAGE) MUST BE SET IN E1-01 FOR THE PROTECTIVE FEATURES OF THE DRIVE TO FUNCTION PROPERLY. FAILURE TO DO SO MAY RESULT IN EQUIPMENT DAMAGE AND/OR PERSONAL INJURY.	155.0 to 255.0 (240V) *3	230.0 V *3	No	Q	Q	Q	Q	Q	300H
E1-03	V/f Pattern Selection V/F Selection	Set to the type of motor being used and the type of application. The Drive operates utilizing a set V/F pattern to determine the appropriate output voltage level for each commanded speed. There are 15 different preset V/F patterns to select from (E1-03 = 0 to E) with varying voltage profiles, base levels (base level = frequency at which maximum voltage is reached), and maximum frequencies. There are also settings for Custom V/F patterns that will use the settings of parameters E1-04 through E1-13. E1-03 = F selects a custom V/F pattern with an upper voltage limit and E1-03 = FF selects a custom V/F pattern without an upper voltage limit. 0: 50Hz 1: 60Hz Saturation 2: 50Hz Saturation 3: 72Hz (60Hz Base) 4: 50Hz VT1 5: 50Hz VT2 6: 60Hz VT1 7: 60Hz VT2 8: 50Hz HST1 9: 50Hz HST2 A: 60Hz HST1 B: 60Hz HST2 C: 90Hz (60Hz Base) D: 120Hz (60Hz Base) E: 180Hz (60Hz Base) F: Custom V/F FF: Custom w/o limit	0 to FF	F	No	Q	Q	No	No	No	302H

Parameter Number	Name: Display	Description	Setting Range	Factory Setting	Change during Operation	Control Methods: V/f	V/f with PG	Open-loop Vector 1	Flux Vector	Open Loop Vector 2	MODBUS Register
E1-04	Max. Output Frequency (FMAX) Max Frequency	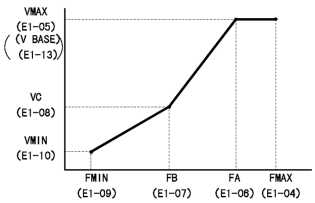 These parameters are only applicable when V/f Pattern Selection is set to Custom (E1-03 = F or FF). To set V/f characteristics in a straight line, set the same values for E1-07 and E1-09. In this case, the setting for E1-08 will be disregarded. Be sure that the four frequencies are set in the following manner or else an OPE10 fault will occur: E1-04 ≥ E1-11 ≥ E1-06 > E1-07 ≥ E1-09 Note: Setting parameter E1-01 to zero is also acceptable.	40.0 to 400.0 *9	60.0Hz *4	No	Q	Q	Q	Q	Q	303H
E1-05	Max. Output Voltage (VMAX) Max Voltage		0.0 to 255.0 *3	230.0 V *3*4	No	Q	Q	Q	Q	Q	304H
E1-06	Base Frequency (FA) Base Frequency		0.0 to 400.0 *9	60.0Hz *4	No	Q	Q	Q	Q	Q	305H
E1-09	Min. Output Frequency (FMIN) Min Frequency		0.0 to 400.0 *9	0.5Hz *4	No	Q	Q	Q	A	Q	308H
E1-13	Base Voltage (VBASE) Base Voltage	Set only when the V/F pattern is finely adjusted in the constant power (HP) area above base speed. Adjustment is not normally required. If E1-13 = 0.0, then value in E1-05 is used for E1-13. Auto-Tuning sets this value.	0.0 to 255.0 (240V) *3	0.0 V *5	No	A	A	Q	Q	Q	30CH
E2-01	Motor Rated Current Motor Rated FLA	Sets the motor nameplate full load current in amperes (A). This value is automatically set during Auto-Tuning.	0.32 to 6.40 *7	1.90 A *6	No	Q	Q	Q	Q	Q	30EH
E2-04	Number of Motor Poles Number of Poles	Sets the number of motor poles. This value is automatically set during Autotuning.	2 to 48	4	No	No	Q	No	Q	Q	311H
E2-11	Motor Rated Output Mtr Rated Power	Sets the motor rated power in kilowatts (kW). This value is automatically set during Auto-Tuning. 1HP = 0.746kW	0.00 to 650.000	0.40 *10	No	Q	Q	Q	Q	Q	318H
F1-01	PG Parameter PG Pulses/Rev	Sets the number of pulses per revolution of the encoder (pulse generator). (Do not set as a multiple.)	0 to 60000	600	No	No	Q	No	Q	No	380H

Parameter Number	Name: Display	Description	Setting Range	Factory Setting	Change during Operation	Control Methods: V/f	V/f with PG	Open-loop Vector 1	Flux Vector	Open Loop Vector 2	MODBUS Register
H4-02	Terminal FM Gain Setting Terminal FM Gain	Sets terminal FM output level when selected monitor is at 100%.In order to adjust the meter, 100% of the appropriate output is multiplied for the gain setting, the bias amount is added and then output. See H4-02 when stopped in Quick, Advanced, or Verify mode. If 03 appears on the setting screen, then terminal FM is used. See H4-04 when stopped in Quick, Advanced, or Verify mode. If 06 appears on the setting screen, then terminal AM is used.	0.00 to 1000.0	100%	Yes	Q	Q	Q	Q	Q	41EH
H4-05	Terminal AM Gain Setting Terminal AM Gain	Sets terminal AM output voltage (in percent of 10Vdc) when selected monitor is at 100% output. In order to adjust the meter, 100% of the appropriate output is multiplied for the gain setting, the bias amount is added and then output. See H4-02 when stopped in Quick, Advanced, or Verify mode. If 03 appears on the setting screen, then terminal FM is used. See H4-04 when stopped in Quick, Advanced, or Verify mode. If 06 appears on the setting screen, then terminal AM is used.	0.00 to 1000.0	50%	Yes	Q	Q	Q	Q	Q	421H
L1-01	Motor Overload Protection Selection MOL Fault Select	Sets the motor thermal overload protection (OL1) based on the cooling capacity of the motor. 0: Disabled 1: Standard Fan Cooled (< 10:1 motor) 2: Standard Blower Cooled (≥10:1 motor) 3: Vector Motor (≤1000:1 motor)	0 to 3	1	No	Q	Q	Q	Q	Q	480H

Parameter Number	Name: Display	Description	Setting Range	Factory Setting	Change during Operation	Control Methods: V/f	V/f with PG	Open-loop Vector 1	Flux Vector	Open Loop Vector 2	MODBUS Register
L3-04	Stall Prevention Selection During Deceleration StallP Decel Sel	When using a braking resistor, use setting "0". Setting "3" is used in specific applications. 0: Disabled - The Drive decelerates at the active deceleration rate. If the load is too large or the deceleration time is too short, an OV fault may occur. 1: General Purpose - The Drive decelerates at the active deceleration rate, but if the main circuit DC bus voltage reaches the stall prevention level (380/760Vdc), deceleration will stop. Deceleration will continue once the DC bus level drops below the stall prevention level. 2: Intelligent - The active deceleration rate is ignored and the Drive decelerates as fast as possible w/o hitting OV fault level. Range: C1-02 / 10. 3: Stall Prevention w/ Braking Resistor - Stall prevention during deceleration is enabled in coordination with dynamic braking.	0 to 3 *11	1	No	Q	Q	Q	Q	Q	492H

* 1. The setting ranges for acceleration/deceleration times depends on the setting of C1-10 (Acceleration/deceleration Time Setting Unit). If C1-10 is set to 0, the setting range is 0.00 to 600.00 (s).
* 2. The factory setting depends on the Drive capacity.
* 3. These are values for a 200-240V class Drive. Values for a 380-480V class Drive are double.
* 4. The factory setting will change when the control method is changed. (Open-loop vector 1 factory settings are given.)
* 5. After autotuning, E1-13 will contain the same value as E1-05.
* 6. The factory setting depends on the Drive capacity. (The value for a 200-240V Class Drive for 0.4 kW is given.)
* 7. The setting range is from 10% to 200% of the Drive rated output current. (The value for a 200-240V Class Drive for 0.4 kW is given.)
* 8. L3-04 cannot be set to 3 for flux vector control or open-loop vector control 2.
* 9. The setting range is 0 to 66.0 for open-loop vector control 2. The upper limit for the setting range also depends on the upper limit in E1-04. The maximum setting is 400.00.
* 10.The same capacity as the Drive will be set by initializing the parameters.
* 11.The setting range is 0 to 2 for flux vector control and open-loop vector control 2.
* 12.Quick Settings are used if Multi-Function Input is set for two motors.
* 13.Setting range changes to {1,2} when operating in Flux Vector and in Open Loop Vector.

User Parameter Tables

◆ A: Setup Settings

The following settings are made with the environment parameters (A parameters): Language displayed on the Digital Operator, access level, control method, initialization of parameters.

■ Initialize Mode: A1

User parameters for the environment modes are shown in the following table.

Parameter Number	Name: Display	Description	Setting Range	Factory Setting	Change during Operation	Control Methods: V/f	V/f with PG	Open Loop Vector 1	Flux Vector	Open Loop Vector 2	MODBUS Register
A1-00	Language Selection Select Language	Language selection for the Digital Operator. This parameter is not reset to the factory setting by A1-03. 0: English 1: Japanese 2: German 3: French 4: Italian 5: Spanish 6: Portuguese	0 to 6	0	Yes	A	A	A	A	A	100H
A1-01	Access Level Selection Access Level	Selects which parameters are accessible via the Digital Operator. 0: Operation Only 1: User Level (only available if A2 parameters have been set) 2: Advanced Level	0 to 2	2	Yes	A	A	A	A	A	101H
A1-02	Control Method Selection Control Method	Selects the Control Method of the Drive. 0: V/F control without PG 1: V/F control with PG 2: Open Loop Vector 3: Flux Vector (Closed Loop Vector) 4: Vector 2 wo/PG Note: Does not return to factory setting when the drive is initialized.	0 to 4	2	No	Q	Q	Q	Q	Q	102H

Parameter Number	Name: Display	Description	Setting Range	Factory Setting	Change during Operation	Control Methods: V/f	V/f with PG	Open Loop Vector 1	Flux Vector	Open Loop Vector 2	MODBUS Register
A1-03	Initialize Parameters Init Parameters	Used to return all parameters to their factory or user default settings. (Initializes and then returns A1-03 to zero.) 0: No Initialize 1110: User Initialize (The user must first set their own parameter values and then store them using parameter o2-03.) 2220: 2-Wire Initialization 3330: 3-Wire Initialization	0 to 3330	0	No	A	A	A	A	A	103H
A1-04	Password 1 Enter Password	When the value set into A1-04 does NOT match the value set into A1-05, parameters A1-01 thru A1-03 and A2-01 thru A2-32 cannot be changed. All other parameters as determined by A1-01 can be changed. Parameter A1-05 can be accessed by pressing the MENU key while holding the RESET key.	0 to 9999	0	No	A	A	A	A	A	104H
A1-05	Password 2 Select Password	When the value set into A1-04 does NOT match the value set into A1-05, parameters A1-01 thru A1-03 and A2-01 thru A2-32 cannot be changed. All other parameters as determined by A1-01 can be changed. Parameter A1-05 can be accessed by pressing the MENU key while holding the RESET key.	0 to 9999	0	No	A	A	A	A	A	105H

■User-set Parameters: A2

The parameters set by the user are listed in the following table.

Parameter Number	Name: Display	Description	Setting Range	Factory Setting	Change during Operation	Control Methods: V/f	V/f with PG	Open Loop Vector 1	Flux Vector	Open Loop Vector 2	MODBUS Register
A2-01 to A2-32	User Parameter 1 to 32 User Param 1 to 32	Selects the parameters to be available in the User Access Level (A1-01 = 1). These parameters are not related to the User Initialize function.	b1-01 to o2-08	-	No	A	A	A	A	A	106H to 125H

◆ Application Parameters: b

The following settings are made with the application parameters (B parameters): Operation method selection, DC injection braking, speed searching, timer functions, dwell functions, and energy saving functions.

■Operation Mode Selections: b1

User parameters for operation mode selection are shown in the following table.

Parameter Number	Name: Display	Description	Setting Range	Factory Setting	Change during Operation	Control Methods: V/f	V/f with PG	Open Loop Vector 1	Flux Vector	Open Loop Vector 2	MODBUS Register
b1-01	Frequency Reference Selection Reference Source	Selects the frequency reference input source. 0: Operator - Digital preset speed U1-01 or d1-01 to d1-17. 1: Terminals - Analog input terminal A1 (or terminal A2 based on parameter H3-09). 2: Serial Com - Modbus RS-422/485 terminals R+, R-, S+, and S-. 3: Option PCB - Option board connected on 2CN. 4: Pulse Input (Terminal RP)	0 to 4	1	No	Q	Q	Q	Q	Q	180H
b1-02	Run Command Selection Run Source	Selects the run command input source. 0: Operator - RUN and STOP keys on Digital Operator. 1: Terminals - Contact closure on terminals S1 or S2. 2: Serial Com - Modbus RS-422/485 terminals R+, R-, S+, and S-. 3: Option PCB - Option board connected on 2CN.	0 to 3	1	No	Q	Q	Q	Q	Q	181H
b1-03	Stopping Method Selection Stopping Method	Selects the stopping method when the run command is removed. 0: Ramp to Stop 1: Coast to Stop 2: DC Injection to Stop 3: Coast with Timer (A new run command is ignored if received before the timer expires).	0 to 3 *	0	No	Q	Q	Q	Q	Q	182H
b1-04	Reverse Operation Selection Reverse Oper	Determines the forward rotation of the motor, and if reverse operation is disabled. 0: Reverse enabled 1: Reverse disabled	0 or 1	0	No	A	A	A	A	A	183H

Parameter Number	Name: Display	Description	Setting Range	Factory Setting	Change during Operation	Control Methods: V/f	V/f with PG	Open Loop Vector 1	Flux Vector	Open Loop Vector 2	MODBUS Register
b1-05	Minimum Output Frequency (E1-09) or Less Operation Selection Zero-Speed Oper	Used to set the method of operation when the frequency reference input is less than the minimum output frequency (E1-09). 0: Run at frequency reference (E1-09 not effective). 1: STOP (Frequencies below E1-09 in the coast to stop state.) 2: Run at min. frequency. (E1-09) 3: Run at zero speed (Frequencies below E1-09 are zero)	0 to 3	0	No	No	No	No	A	No	184H
b1-06	Digital Input Scan Time Cntl Input Scans	Sets the scan rate of digital input terminals. 0: 2ms - 2 scans (for quick response) 1: 5ms - 2 scans (for noisy environments)	0 or 1	1	No	A	A	A	A	A	185H
b1-07	Local/ Remote Run Selection LOC/REM RUN Sel	0: Cycle External RUN - If the run command is closed when switching from local mode to remote mode, the Drive will not run. 1: Accept External RUN - If the run command is closed when switching from local mode to remote mode, the Drive WILL run. (same as setting "0" except drive will not run)	0 or 1	0	No	A	A	A	A	A	186H
b1-08	Run Command Selection During Program RUN CMD at PRG	0: Disabled - Run command accepted only in the operation menu. 1: Enabled - Run command accepted in all menus (except when b1-02 = 0).	0 or 1	0	No	A	A	A	A	A	187H
b1-10	Zero-speed Operation Selection ModeSel @ZeroSpd	0: Disabled. 1: Enabled. Should be enabled when using devices that require motor speed reference as well as both forward and reverse rotation. Allows for more stability related controls at zero speed.	0 or 1	0	No	No	No	No	No	A	1DEH

* The setting range is 1 or 2 for flux vector control and open-loop vector control 2.

■DC Injection Braking: b2

User parameters for injection braking are shown in the following table.

Parameter Number	Name: Display	Description	Setting Range	Factory Setting	Change during Operation	Control Methods: V/f	V/f with PG	Open Loop Vector 1	Flux Vector	Open Loop Vector 2	MODBUS Register
b2-01	DC Injection Braking Start Frequency DCInj Start Freq	Sets the frequency at which DC injection braking starts when ramp to stop (b1-03 = 0) is selected. If b2-01< E1-09, DC Injection braking starts at E1-09. Note: Zero Speed restrictions are active in Flux Vector Mode.	0.0 to 10.0	0.5Hz	No	A	A	A	A	A	189H
b2-02	DC Injection Braking Current DCInj Current	Sets the DC injection braking current as a percentage of the Drive rated current. Note: The DC excitation current is determined by the setting in E2-03 when operating in flux loop vector control mode.	0 to 100	50%	No	A	A	A	No	No	18AH
b2-03	DC Injection Braking Time/DC Excitation Time at Start DCInj Time@Start	Sets the time of DC injection braking at start in units of 0.01 seconds.	0.00 to 10.00	0.00 s	No	A	A	A	A	A	18BH
b2-04	DC Injection Braking Time at Stop DCInj Time@Stop	Sets the time length of DC injection braking at stop in units of 0.01 seconds. 1: When b1-03 = 2, actual DC Injection time is calculated as follows: (b2-04) x 10 x (OutputFreq) / (E1-04) 2: When b1-03 = 0, this parameter determines the amount of time DC Injection is applied to the motor at the end of the decel ramp. 3: This should be set to a minimum of 0.50 seconds when using HSB. This will activate DC injection during the final portion of HSB and help ensure that the motor stops completely.	0.00 to 10.00	0.50 s	No	A	A	A	A	A	18CH
b2-08	Magnetic Flux Compensation Capacity Field Comp	Sets the magnetic flux compensation as a percentage of the no-load current value (E2-03).	0 to 1000	0%	No	No	No	A	No	No	190H

■Speed Search: b3

User parameters for the speed search are shown in the following table.

Parameter Number	Name: Display	Description	Setting Range	Factory Setting	Change during Operation	Control Methods: V/f	V/f with PG	Open Loop Vector 1	Flux Vector	Open Loop Vector 2	MODBUS Register
b3-01	Speed Search Selection SpdSrch at Start	Enables/disables and selects the speed search function at start. 0: Speed Estimation Speed Search Disable - Speed search at start is disabled (however the estimated speed method is used for multi-function input, power loss ridethrough, auto fault retry) 1: Speed Estimation Speed Search Enable - The speed estimation method of speed search is enabled at run command. 2: Current Detection Speed Search Disable - Speed search at start is disabled (however the current detection method is used for multi-function input, power loss ride through, auto fault retry) 3: Current Detection Speed Search Enable - The current detection method of speed search is enabled at run command. Speed Estimation Method: Motor speed and direction are measured using residual motor flux. Current Detection Method: Motor speed is measured using current feedback levels (unidirectional only).	0 to 3	2*	No	A	A	A	No	A	191H
b3-02	Speed Search Deactivation Current SpdSrch Current	Used only when b3-01 = 2 or 3. Sets speed search operating current in units of percent, with drive rated current as 100%. Note: Normally not necessary to change. If the drive won't run after a restart, lower this value.	0 to 200	100%**	No	A	No	A	No	A	192H
b3-03	Speed Search Deceleration Time SpdSrch Dec Time	Used only when b3-01 = 2 or 3. Sets the deceleration time during speed search.	0.1 to 10.0	2.0 s	No	A	No	A	No	No	193H

Parameter Number	Name	Description	Setting Range	Factory Setting	Change during Operation	Control Methods					MODBUS Register
	Display					V/f	V/f with PG	Open Loop Vector 1	Flux Vector	Open Loop Vector 2	
b3-05	Speed Sarch Delay Time Search Delay	Delays the speed search operation after a momentary power loss to allow time for an external output contactor to re-energize.	0.0 to 20.0	0.2 s	No	A	A	A	A	A	195H
b3-10	Speed Sarch Detection Compensation Gain Srch Detect Comp	Sets the gain for the frequency at which the Drive starts speed estimation speed search. Use only when b3-01 = 0 or 1.	1.00 to 1.20	1.10	No	A	No	A	No	A	19AH
b3-13	Proportional Gain of Observer During Speed Search Srch Est P Gain	Sets n4-08 in units of 1.0 for P-gain (PI Controls) as the Observer during Speed Search. Note: Normally this parameter need not be changed, although a low setting is needed when OV occurs during speed search with a large amount of load inertia. Set larger values when working with speed agree.	0.1 to 2.0	1.0%	No	No	No	No	No	A	19DH
b3-14	Bi-directional Speed Search Selection Bidir Search Sel	This parameter enables the Drive to detect the direction of rotation of the motor during speed search. 0: Disable - Drive uses frequency reference direction. 1: Enable - Drive uses detected direction	0 to 1	1	No	A	A	A	No	A	19EH

* Factory settings will change when the control method is changed. (Open-loop vector 1 factory settings are given.) Set to “3” in V/f w/PG.

** Factory settings will change when the control method is changed.

■Timer Function: b4

User parameters for timer functions are shown in the following table.

Parameter Number	Name: Display	Description	Setting Range	Factory Setting	Change during Operation	Control Methods: V/f	V/f with PG	Open Loop Vector 1	Flux Vector	Open Loop Vector 2	MODBUS Register
b4-01	Timer Function ON-delay Time Delay-ON Timer	Used in conjunction with a multi-function digital input and a multi-function digital output programmed for the timer function. This sets the amount of time between when the digital input is closed, and the digital output is energized.	0.0 to 3000.0	0.0 s	No	A	A	A	A	A	1A3H
b4-02	Timer Function OFF-delay Time Delay-OFF Timer	Used in conjunction with a multi-function digital input and a multi-function digital output programmed for the timer function. This sets the amount of time the output stays energized after the digital input is opened.	0.0 to 3000.0	0.0 s	No	A	A	A	A	A	1A4H

■PID Control: b5

User parameters for PID control are shown in the following table.

Parameter Number	Name: Display	Description	Setting Range	Factory Setting	Change during Operation	Control Methods: V/f	V/f with PG	Open Loop Vector 1	Flux Vector	Open Loop Vector 2	MODBUS Register
b5-01	PID Function Setting PID Mode	This parameter determines the function of the PID control. 0: Disabled 1: D= Feedback 2: D= Feed-Forward 3: Freq. Ref. + PID output (D = Feedback) 4: Freq. Ref. + PID output (D = Feed-Forward)	0 to 4	0	No	A	A	A	A	A	1A5H
b5-02	Proportional Gain Setting PID Gain	Sets the proportional gain of the PID controller.	0.00 to 25.00	1.00	Yes	A	A	A	A	A	1A6H
b5-03	Integral Time Setting PID I Time	Sets the integral time for the PID controller. A setting of zero disables integral control.	0.0 to 360.0	1.0 s	Yes	A	A	A	A	A	1A7H
b5-04	Integral Limit Setting PID I Limit	Sets the maximum output possible from the integrator. Set as a percentage (%) of maximum frequency.	0.0 to 100.0	100.0%	Yes	A	A	A	A	A	1A8H
b5-05	Derivative Time PID D Time	Sets D-control derivative time. A setting of 0.00 disables derivative control.	0.00 to 10.00	0.00 s	Yes	A	A	A	A	A	1A9H

Parameter Number	Name: Display	Description	Setting Range	Factory Setting	Change during Operation	Control Methods: V/f	V/f with PG	Open Loop Vector 1	Flux Vector	Open Loop Vector 2	MODBUS Register
b5-06	PID Output Limit PID Limit	Sets the maximum output possible from the entire PID controller. Set as a percentage (%) of maximum frequency.	0.0 to 100.0	100.0%	Yes	A	A	A	A	A	1AAH
b5-07	PID Offset Adjustment PID Offset	Sets the amount of offset of the output of the PID controller. Set as a percentage (%) of maximum frequency. The offset is summed with the PID output. This can be used to artificially kick-start a slow starting PID loop.	-100.0 to 100.0	0.0%	Yes	A	A	A	A	A	1ABH
b5-08	PID Primary Delay Time Constant PID Delay Time	Sets the amount of time for the filter on the output of the PID controller. Note: The offset is summed with the PID output. This can be used to artifically kick-start a slow starting PID loop. Note: Normally, change is not required.	0.00 to 10.00	0.00 s	Yes	A	A	A	A	A	1ACH
b5-09	PID Output Level Selection Output Level Sel	Determines whether the PID controller will be direct or reverse acting. 0: Normal Output (direct acting) 1: Reverse Output (reverse acting)	0 or 1	0	No	A	A	A	A	A	1ADH
b5-10	PID Output Gain Setting Output Gain	Sets the output gain of the PID controller.	0.0 to 25.0	1.0	No	A	A	A	A	A	1AEH
b5-11	PID Output Reverse Selection Output Rev Sel	0: Zero Limit (when PID output goes negative, Drive stops). Zero Limit is automatic when reverse prohibit is selected using b1-04. 1: Reverse (when PID goes negative, Drive reverses).	0 or 1	0	No	A	A	A	A	A	1AFH
b5-12	PID Feedback Reference Missing Detection Selection Fb los Det Sel	0: Disabled (no detection of loss of PID feedback) 1: Alarm (detection of loss of PID feedback, operation continues during detection with the fault contact not energized) 2: Fault (detection of loss of PID feeedback, coast to stop during detection and fault contact energizes)	0 to 2	0	No	A	A	A	A	A	1B0H

Parameter Number	Name: Display	Description	Setting Range	Factory Setting	Change during Operation	Control Methods: V/f	V/f with PG	Open Loop Vector 1	Flux Vector	Open Loop Vector 2	MODBUS Register
b5-13	PID Feedback Loss Detection Level Fb los Det Lvl	Sets the PID feedback loss detection level as a percentage (%) of maximum frequency (E1-04).	0 to 100	0%	No	A	A	A	A	A	1B1H
b5-14	PID Feedback Loss Detection Time Fb los Det Time	Sets the PID feedback loss detection delay time in terms of seconds.	0.0 to 25.5	1.0 s	No	A	A	A	A	A	1B2H
b5-15	PID Sleep Function Start level PID Sleep Level	Sets the sleep function start frequency. Note: Enabled even when PID control mode has not been selected.	0.0 to 400.0	0.0Hz	No	A	A	A	A	A	1B3H
b5-16	PID Sleep Delay Time PID Sleep Time	Sets the sleep function delay time in terms of 0.1 seconds.	0.0 to 25.5	0.0 s	No	A	A	A	A	A	1B4H
b5-17	PID Accel/decel Time PID Acc/Dec Time	Applies an accel/decel time to the PID setpoint reference. The Drive's standard softstarter (C1-xx and S-curve) still affects the output of the PID algorithm.	0.0 to 25.5	0.0 s	No	A	A	A	A	A	1B5H
b5-18	PID Setpoint Selection PID Setpoint Sel	Allows the b5-19 setting to be the PID target setpoint value. 0: Disabled 1: Enabled	0 to 1	0	No	A	A	A	A	A	1DCH
b5-19	PID Setpoint PID Setpoint	Sets the PID target value. Use only when b5-18 = 1	0.0 to 100.0	0.0 %	No	A	A	A	A	A	1DDH

■Dwell Functions: b6

User parameters for dwell functions are shown in the following table.

Parameter Number	Name: Display	Description	Setting Range	Factory Setting	Change during Operation	Control Methods: V/f	V/f with PG	Open Loop Vector 1	Flux Vector	Open Loop Vector 2	MODBUS Register
b6-01	Dwell Reference at Start / Dwell Ref @Start	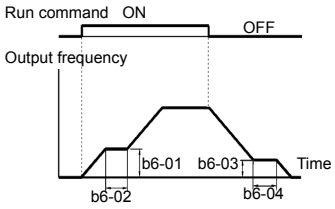 The dwell function is used to temporarily hold the frequency when driving a motor with heavy load.	0.0 to 400.0	0.0Hz	No	A	A	A	A	A	1B6H
b6-02	Dwell Time at Start / Dwell Time @Start		0.0 to 10.0	0.0 s	No	A	A	A	A	A	1B7H
b6-03	Dwell Frequency at Stop / Dwell Ref @Stop		0.0 to 400.0	0.0Hz	No	A	A	A	A	A	1B8H
b6-04	Dwell Time at Stop / Dwell Time @Stop		0.0 to 10.0	0.0 s	No	A	A	A	A	A	1B9H

■DROOP Control: b7

User parameters for droop functions are shown in the following table.

Parameter Number	Name: Display	Description	Setting Range	Factory Setting	Change during Operation	Control Methods: V/f	V/f with PG	Open Loop Vector 1	Flux Vector	Open Loop Vector 2	MODBUS Register
b7-01	Droop Control Level / Droop Quantity	Sets the speed decrease as a percentage of motor base speed (E1-06) when the motor is at 100% load torque. Setting of 0.0 disables droop control.	0.0 to 100.0	0.0%	Yes	No	No	No	A	A	1CAH
b7-02	Droop Control Delay Time / Droop Delay Time	Determines the droop control delay time in response to a load change.	0.03 to 2.00	0.05 s	Yes	No	No	No	A	A	1CBH

■Energy Saving: b8

User parameters for energy-saving control functions are shown in the following table.

Parameter Number	Name: Display	Description	Setting Range	Factory Setting	Change during Operation	Control Methods: V/f	V/f with PG	Open Loop Vector 1	Flux Vector	Open Loop Vector 2	MODBUS Register
b8-01	Energy Saving Control Selection Energy Save Sel	Energy Savings function enable/disable selection. 0: Disabled 1: Enabled	0 or 1	0	No	A	A	A	A	A	1CCH
b8-02	Energy Saving Gain Energy Save Gain	Sets energy savings control gain when in vector control mode.	0.0 to 10.0	0.7 *1	Yes	No	No	A	A	A	1CDH
b8-03	Energy Saving Control Filter Time Constant Energy Saving F.T	Sets energy saving control filter time constant when in vector control mode.	0.00 to 10.0	0.50 s *2	Yes	No	No	A	A	A	1CEH
b8-04	Energy Saving Coefficient Value Energy Save COEF	Used to fine-tune the energy savings function when in V/f Control Mode.	0.0 to 655.00	*3	No	A	A	No	No	No	1CFH
b8-05	Power Detection Filter Time kW Filter Time	Used to fine-tune the energy savings function when in V/f Control Mode.	0 to 2000	20ms	No	A	A	No	No	No	1D0H
b8-06	Search Operation Voltage Limit Search V Limit	Used to fine-tune the energy savings function when in V/f Control Mode.	0 to 100	0%	No	A	A	No	No	No	1D1H

* 1. The factory setting is 1.0 when using V/f control with PG.
* 2. Initial settings vary based on drive capacity and control mode.
* 3. Caution: Initial settings will vary based on motor capacity.

■Zero Servo: b9

User parameters for dwell functions are shown in the following table.

Parameter Number	Name: Display	Description	Setting Range	Factory Setting	Change during Operation	Control Methods: V/f	V/f with PG	Open Loop Vector 1	Flux Vector	Open Loop Vector 2	MODBUS Register
b9-01	Zero-servo Gain Zero Servo Gain	Sets the position loop gain for Zero Servo command. This function is effective when multi-function input "zero- servo command" is set.	0 to 100	5	No	No	No	No	A	No	1DAH
b9-02	Zero-servo Completion Width Zero Servo Count	Sets number of pulses used for the multi-function output of "zero servo completion".	0 to 16383	10	No	No	No	No	A	No	1DBH

◆ Autotuning Parameters: C

The following settings are made with the autotuning parameters (C parameters): Acceleration/deceleration times, s-curve characteristics, slip compensation, torque compensation, speed control, and carrier frequency functions.

■Acceleration/Deceleration: C1

User parameters for acceleration and deceleration times are shown in the following table.

Parameter Number	Name: Display	Description	Setting Range	Factory Setting	Change during Operation	Control Methods: V/f	V/f with PG	Open Loop Vector 1	Flux Vec-tor	Open Loop Vector 2	MODBUS Register
C1-01	Acceleration Time 1 Accel Time 1	Sets the time to accelerate from zero to maximum frequency.	0.0 to 6000.0*	10.0 s	Yes	Q	Q	Q	Q	Q	200H
C1-02	Deceleration Time 1 Decel Time 1	Sets the time to decelerate from maximum frequency to zero.			Yes	Q	Q	Q	Q	Q	201H
C1-03	Acceleration Time 2 Accel Time 2	Sets the time to accelerate from zero to maximum frequency when selected via a multi-function input.			Yes	A	A	A	A	A	202H
C1-04	Deceleration Time 2 Decel Time 2	Sets the time to decelerate from maximum frequency to zero when selected via a multi-function input.			Yes	A	A	A	A	A	203H
C1-05	Acceleration Time 3 Accel Time 3	Sets the time to accelerate from zero to maximum frequency when selected via a multi-function input.			No	A	A	A	A	A	204H
C1-06	Deceleration Time 3 Decel Time 3	Sets the time to decelerate from maximum frequency to zero when selected via a multi-function input.			No	A	A	A	A	A	205H
C1-07	Acceleration Time 4 Accel Time 4	Sets the time to accelerate from zero to maximum frequency when selected via a multi-function input.			No	A	A	A	A	A	206H
C1-08	Deceleration Time 4 Decel Time 4	Sets the time to decelerate from maximum frequency to zero when selected via a multi-function input.			No	A	A	A	A	A	207H
C1-09	Emergency Stop Time Fast Stop Time	Sets the time to decelerate from maximum frequency to zero for the multi-function input "Fast Stop" function. Note: This parameter is also used by selecting "Fast Stop" as a Stop Method when a fault is detected.			No	A	A	A	A	A	208H
C1-10	Accel/decel Time Setting Unit Acc/Dec Units	Sets the setting resolution of C1-01 to C1-09: 0: 0.01sec (0.00 to 600.00sec) 1: 0.1sec (0.0 to 6000.0sec)	0 or 1	1	No	A	A	A	A	A	209H

Parameter Number	Name: Display	Description	Setting Range	Factory Setting	Change during Operation	Control Methods: V/f	V/f with PG	Open Loop Vector 1	Flux Vec-tor	Open Loop Vector 2	MODBUS Register
C1-11	Accel/decel Switch Frequency Acc/Dec SW Freq	Sets the frequency for automatic switching of accel / decel times. Fout < C1-11: Accel/Decel Time 4 Fout ≥ C1-11: Accel/Decel Time 1 Multi-function inputs "Multi-Acc/Dec 1" and "Multi-Acc/Dec 2" have priority over C1-11. Note: With Multi-Function Input, Accel/Decel Time 1 and 2 will take precedence.	0.0 to 400.0 **	0.0Hz	No	A	A	A	A	A	20AH

* The setting range for accel/decel time will differ depending on C1-10 (Accel/Decel Time Units). If C1-10 is set to "0", then the setting range will change to 0.00sec to 600.00sec.

** Varies by Duty Rating.

■S-curve Acceleration/Deceleration: C2

User parameters for S-curve characteristics are shown in the following table.

Parameter Number	Name: Display	Description	Setting Range	Fac-tory Setting	Change during Operation	Control Methods: V/f	V/f with PG	Open Loop Vector 1	Flux Vec-tor	Open Loop Vector 2	MODBUS Register
C2-01	S-curve Characteristic at Accel Start SCrv Acc @ Start	S-curve is used to further soften the starting and stopping ramp. The longer the S-curve time, the softer the starting and stopping ramp. Note: With this setting, accel/decel times will be exactly half of the start and finish times of the S-curve characteristic time. 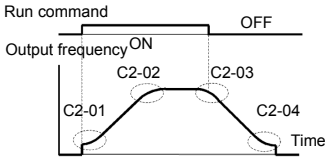	0.00 to 2.50	0.20 s	No	A	A	A	A	A	20BH
C2-02	S-curve Characteristic at Accel End SCrv Acc @ End		0.00 to 2.50	0.20 s	No	A	A	A	A	A	20CH
C2-03	S-curve Characteristic at Decel Start SCrv Dec @ Start		0.00 to 2.50	0.20 s	No	A	A	A	A	A	20DH
C2-04	S-curve Characteristic at Decel End SCrv Dec @ End		0.00 to 2.50	0.00 s	No	A	A	A	A	A	20EH

■Motor Slip Compensation: C3

User parameters for slip compensation are shown in the following table.

Parameter Number	Name: Display	Description	Setting Range	Factory Setting	Change during Operation	Control Methods: V/f	V/f with PG	Open Loop Vector 1	Flux Vector	Open Loop Vector 2	MODBUS Register
C3-01	Slip Compensation Gain Slip Comp Gain	This parameter is used to increase motor speed to account for motor slip by boosting the output frequency. If the speed is lower than the frequency reference, increase C3-01. If the speed is higher than the frequency reference, decrease C3-01. Note: Adjustment is not normally required. When operating in Open Loop Vector, this parameter works as a function to set the proper amount of gain.	0.0 to 2.5	1.0*	Yes	A	No	A	A	A	20FH
C3-02	Slip Compensation Primary Delay Time Slip Comp Time	This parameter adjusts the filter on the output of the slip compensation function. Increase to add stability, decrease to improve response.	0 to 10000	200ms*	No	A	No	A	No	No	210H
C3-03	Slip Compensation Limit Slip Comp Limit	This parameter sets the upper limit for the slip compensation function. It is set as a percentage of motor rated slip (E2-02).	0 to 250	200%	No	A	No	A	No	No	211H
C3-04	Slip Compensation Selection During Regeneration Slip Comp Regen	Determines whether slip compensation is enabled or disabled during regenerative operation. 0: Disabled 1: Enabled	0 or 1	0	No	A	No	A	No	No	212H
C3-05	Output Voltage Limit Operation Selection V/f Slip Cmp Sel	Determines if the motor magnetic flux is automatically decreased when output voltage saturation occurs. 0: Disabled 1: Enabled	0 or 1	0*	No	No	No	A	A	A	213H

* The display shows the factory settings for Open Loop Vector. Default settings will change in accordance with the control mode.

■Torque Compensation: C4

User parameters for are torque compensation shown in the following table.

Parameter Number	Name: Display	Description	Setting Range	Factory Setting	Change during Operation	Control Methods: V/f	V/f with PG	Open Loop Vector 1	Flux Vector	Open Loop Vector 2	MODBUS Register
C4-01	Torque Compensation Gain Torq Comp Gain	This parameter sets the gain for the Drive's automatic torque boost function to match the Drive's output voltage to the motor load. This parameter helps to produce better starting torque. It determines the amount of torque or voltage boost based upon motor current, motor resistance, and output frequency. Note: Adjustment is not normally required.	0.00 to 2.50	1.00	Yes	A	A	A	No	No	215H
C4-02	Torque Compensation Primary Delay Time Torq Comp Time	This parameter adjusts the filter on the output of the torque compensation function. Increase to add stability, decrease to improve response. Note: Adjustment is not normally required.	0 to 10000	20ms*	No	A	A	A	No	No	216H
C4-03	Torque Compensation at Forward Start F TorqCmp@ start	Sets torque compensation at forward start as a percentage of motor torque.	0.0 to 200.0	0.0%	No	No	No	A	No	No	217H
C4-04	Torque Compensation at Reverse Start R TorqCmp@ start	Sets torque compensation at reverse start as a percentage of motor torque.	-200.0 to 0.0	0.0%	No	No	No	A	No	No	218H
C4-05	Torque Compensation Time Constant TorqCmp Delay T	Sets the time constant for torque compensation at forward start and reverse start (C4-03 and C4-04). The filter is disabled if the time is set to 4ms or less.	0 to 200	10ms	No	No	No	A	No	No	219H

* The display shows the factory settings for Open loop vector 1 (OLV1). Default settings will change in accordance with the control mode.

■Speed Control (ASR): C5

User parameters for speed control are shown in the following table.

Parameter Number	Name: Display	Description	Setting Range	Factory Setting	Change during Operation	Control Methods: V/f	V/f with PG	Open Loop Vector 1	Flux Vector	Open Loop Vector 2	MODBUS Register
C5-01	ASR Proportional Gain 1 ASR P Gain 1	Sets the proportional gain of the speed control loop (ASR.)	0.00 to 300.00 *2	20.00 *1	Yes	No	A	No	A	A	21BH
C5-02	ASR Integral Time 1 ASR I Time 1	Sets the integral time of the speed control loop (ASR)	0.000 to 10.000	0.500s *1	Yes	No	A	No	A	A	21CH
C5-03	ASR Proportional Gain 2 ASR P Gain 2	Usually setting is not necessary. Set to change the rotational speed gain. 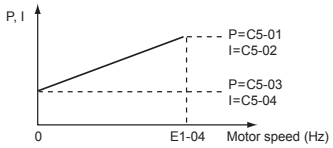	0.00 to 300.00 *2	20.00 *1	Yes	No	A	No	A	A	21DH
C5-04	ASR Integral Time 2 ASR I Time 2		0.000 to 10.000	0.500s *1	Yes	No	A	No	A	A	21EH
C5-05	ASR Limit ASR Limit	Sets the upper limit for the speed control loop (ASR) as a percentage of the maximum output frequency (E1-04).	0.0 to 20.0	5.0%	No	No	A	No	No	No	21FH
C5-06	ASR Primary Delay Time Constant ASR Delay Time	Sets the filter time constant for the time from the speed loop to the torque command output.	0.000 to 0.500	0.004s *1	No	No	No	No	A	A	220H
C5-07	ASR Switching Frequency ASR Gain SW Freq	Sets the frequency for switching between Proportional Gain 1, 2 and Integral Time 1, 2.	0.0 to 400.0	0.0Hz	No	No	No	No	A	A	221H
C5-08	ASR Integral Limit ASR I Limit	Sets the ASR integral upper limit and rated load as a percentage of maximum output frequency (E1-04).	0 to 400	400%	No	No	No	No	A	A	222H
C5-10	ASR Primary Delay Time Constant 2 ASR Delay Time2	Sets the Filter Time Constant when the torque command is output from the Speed Control Loop (ASR). Enabled only with a speed range of max 35Hz while in Vector Control 2 Mode without PG. Note: Adjustment is not normally required.	0.000 to 0.500	0.010 s	No	No	No	No	No	A	231H

* 1. Factory settings will change depending on the control mode.

* 2. The setting range becomes 1.00 to 300.0 when using controls modes Flux Vector or Open Loop Vector 2.

■Carrier Frequency: C6

User parameters for the carrier frequency are shown in the following table.

Parameter Number	Name: Display	Description	Setting Range	Factory Setting	Change during Operation	Control Methods: V/f	V/f with PG	Open Loop Vector 1	Flux Vector	Open Loop Vector 2	MODBUS Register
C6-02	Carrier Frequency Selection / Carrier Freq Sel	Selects the number of pulses per second of the output voltage waveform. Setting range determined by C6-01 setting. 0: Low noise 1: Fc = 2.0 kHz 2: Fc = 5.0 kHz 3: Fc = 8.0 kHz 4: Fc = 10.0 kHz 5: Fc = 12.5 kHz 6: Fc = 15.0 kHz OF: Program (Determined by the settings of C6-03 thru C6-05)	0 to F	6 *2	No	Q	Q	Q	Q	No *5	224H
C6-03	Carrier Frequency Upper Limit / Carrier Freq Max	Sets the relationship of output frequency to carrier frequency when C6-02 = OF. Note: Carrier frequency is set to C6-03 (upper limit) when operating in Vector Control Mode.	2.0 to 15.0 *3 *4	15.0 kHz *2	No	A	A	A	A	No	225H
C6-04	Carrier Frequency Lower Limit / Carrier Freq Min	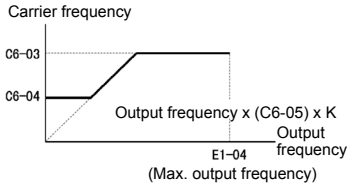	0.4 to 15.0 *3 *4	15.0 kHz *2	No	A	A	No	No	No	226H
C6-05	Carrier Frequency Proportional Gain / Carrier Freq Gain	K is a coefficient that depends on the setting of C6-03. C6-03 ≥ 10.0 kHz: K = 3 10.0 kHz > C6-03 ≥ 5.0 kHz: K = 2 5.0 kHz > C6-03: K = 1	0 to 99 *4	0	No	A	A	No	No	No	227H
C6-11	Carrier Frequency Selection for Open-loop Vector 2 / Carrier Freq Sel	Selects the carrier frequency during Vector Control 2 wo/PG. 1: 2kHz (3-phase modulation) 2: 4kHz (3-phase modulation) 3: 6kHz (3-phase modulation) 4: 8kHz (3-phase modulation)	1 to 4	4 *2	No	No *5	No *5	No *5	No *5	Q	22DH

* 1. The setting range depends on the control method of the Drive.
* 2. Initial values vary depending on drive capacity.
* 3. Setting range varies based on drive capacity.
* 4. This parameter can be monitored or set only when 1 is set for C6-01 and F is set for C6-02.
* 5. Quick Settings are used if Multi-Function Input is set for two motors.

◆ Reference Parameters: d

The following settings are made with the reference parameters (d parameters): Frequency references.

■Preset Reference: d1

User parameters for frequency references are shown in the following table.

Parameter Number	Name: Display	Description	Setting Range	Factory Setting	Change during Operation	Control Methods: V/f	V/f with PG	Open Loop Vector 1	Flux Vector	Open Loop Vector 2	MODBUS Register
d1-01	Frequency Reference 1 Reference 1	Setting units are affected by o1-03.	0 to 400.00 *	0.00Hz	Yes	Q	Q	Q	Q	Q	280H
d1-02	Frequency Reference 2 Reference 2	Frequency reference when multi-function input "Multi-step speed reference 1" is ON. Setting units are affected by o1-03.		0.00Hz	Yes	A	A	A	A	A	281H
d1-03	Frequency Reference 3 Reference 3	Frequency reference when multi-function input "Multi-step speed reference 2" is ON. Setting units are affected by o1-03.		0.00Hz	Yes	A	A	A	A	A	282H
d1-04	Frequency Reference 4 Reference 4	Frequency reference when multi-function input "Multi-step speed reference 1, 2" is ON. Setting units are affected by o1-03.		0.00Hz	Yes	A	A	A	A	A	283H
d1-05	Frequency Reference 5 Reference 5	Frequency reference when multi-function input "Multi-step speed reference 3" is ON. Setting units are affected by o1-03.		0.00Hz	Yes	A	A	A	A	A	284H
d1-06	Frequency Reference 6 Reference 6	Frequency reference when multi-function input "Multi-step speed reference 1, 3" is ON. Setting units are affected by o1-03.		0.00Hz	Yes	A	A	A	A	A	285H
d1-07	Frequency Reference 7 Reference 7	Frequency reference when multi-function input "Multi-step speed reference 2, 3" is ON. Setting units are affected by o1-03.		0.00Hz	Yes	A	A	A	A	A	286H
d1-08	Frequency Reference 8 Reference 8	Frequency reference when multi-function input "Multi-step speed reference 1, 2, 3" is ON. Setting units are affected by o1-03.		0.00Hz	Yes	A	A	A	A	A	287H
d1-09	Frequency Reference 9 Reference 9	Frequency reference when multi-function input "Multi-step speed reference 4" is ON. Setting units are affected by o1-03.		0.00Hz	Yes	A	A	A	A	A	288H

Parameter Number	Name: Display	Description	Setting Range	Factory Setting	Change during Operation	Control Methods: V/f	V/f with PG	Open Loop Vector 1	Flux Vector	Open Loop Vector 2	MODBUS Register
d1-10	Frequency Reference 10 Reference 10	Frequency reference when multi-function input "Multi-step speed reference 1, 4" is ON. Setting units are affected by o1-03.	0 to 400.00 *	0.00Hz	Yes	A	A	A	A	A	28BH
d1-11	Frequency Reference 11 Reference 11	Frequency reference when multi-function input "Multi-step speed reference 2, 4" is ON. Setting units are affected by o1-03.		0.00Hz	Yes	A	A	A	A	A	28CH
d1-12	Frequency Reference 12 Reference 12	Frequency reference when multi-function input "Multi-step speed reference 1, 2, 4" is ON. Setting units are affected by o1-03.		0.00Hz	Yes	A	A	A	A	A	28DH
d1-13	Frequency Reference 13 Reference 13	Frequency reference when multi-function input "Multi-step speed reference 3, 4" is ON. Setting units are affected by o1-03.		0.00Hz	Yes	A	A	A	A	A	28EH
d1-14	Frequency Reference 14 Reference 14	Frequency reference when multi-function input "Multi-step speed reference 1, 3, 4" is ON. Setting units are affected by o1-03.		0.00Hz	Yes	A	A	A	A	A	28FH
d1-15	Frequency Reference 15 Reference 15	Frequency reference when multi-function input "Multi-step speed reference 2, 3, 4" is ON. Setting units are affected by o1-03.		0.00Hz	Yes	A	A	A	A	A	290H
d1-16	Frequency Reference 16 Reference 16	Frequency reference when multi-function input "Multi-step speed reference 1, 2, 3, 4" is ON. Setting units are affected by o1-03.		0.00Hz	Yes	A	A	A	A	A	291H
d1-17	Jog Frequency Reference Jog Reference	Frequency reference when: "Jog frequency reference" is selected via multi-function input terminals. "Jog frequency reference" has priority over "multi-step speed reference 1 to 4". Parameter d1-17 is also the reference for the JOG key on the Digital Operator, and the multi-function inputs "forward jog" and "reverse jog". Setting units are affected by o1-03.		6.00Hz	Yes	Q	Q	Q	Q	Q	292H

Note The unit is set in o1-03 (frequency units of reference setting and monitor). The default for o1-03 is 0 (increments of 0.01Hz).

* Setting range changes to 0 thru 66.0 when operating in Vector 2 wo/PG. The upper limit for the setting range also depends on the upper limit in E1-04. The max setting is 400.00.

■Reference Limits: d2

User parameters for frequency reference limits are shown in the following table.

Parameter Number	Name: Display	Description	Setting Range	Factory Setting	Change during Operation	Control Methods: V/f	V/f with PG	Open Loop Vector 1	Flux Vector	Open Loop Vector 2	MODBUS Register
d2-01	Frequency Reference Upper Limit / Ref Upper Limit	Determines maximum frequency reference, set as a percentage of maximum output frequency (E1-04). If the frequency reference is above this value, actual Drive speed will be limited to this value. This parameter applies to all frequency reference sources.	0.0 to 110.0	100.0%	No	A	A	A	A	A	289H
d2-02	Frequency Reference Lower Limit / Ref Lower Limit	Sets the output frequency lower limit as a percentage of the maximum output frequency.	0.0 to 110.0	0.0%	No	A	A	A	A	A	28AH
d2-03	Master Speed Reference Lower Limit / Ref1 Lower Limit	Set the master speed reference lower limit as a percent, taking the max. output frequency to be 100%.	0.0 to 110.0	0.0%	No	A	A	A	A	A	293H

■Jump Frequencies: d3

User parameters for jump frequencies are shown in the following table.

Parameter Number	Name: Display	Description	Setting Range	Factory Setting	Change during Operation	Control Methods: V/f	V/f with PG	Open Loop Vector 1	Flux Vector	Open Loop Vector 2	MODBUS Register
d3-01	Jump Frequency 1 / Jump Freq 1	This parameter allow programming of up to three prohibited frequency reference points for eliminating problems with resonant vibration of the motor / machine. This feature does not actually eliminate the selected frequency values, but will accelerate and decelerate the motor through the prohibited bandwidth.	0.0 to 400.0	0.0Hz	No	A	A	A	A	A	294H
d3-02	Jump Frequency 2 / Jump Freq 2			0.0Hz	No	A	A	A	A	A	295H
d3-03	Jump Frequency 3 / Jump Freq 3			0.0Hz	No	A	A	A	A	A	296H
d3-04	Jump Frequency Width / Jump Bandwidth	This parameter determines the width of the deadband around each selected prohibited frequency reference point. A setting of "1.0" will result in a deadband of +/- 1.0Hz.	0.0 to 20.0	1.0Hz	No	A	A	A	A	A	297H

■Reference Frequency Hold: d4

User parameters for the reference frequency hold function are shown in the following table.

Parameter Number	Name: Display	Description	Setting Range	Factory Setting	Change during Operation	Control Methods: V/f	V/f with PG	Open Loop Vector 1	Flux Vector	Open Loop Vector 2	MODBUS Register
d4-01	Frequency Reference Hold Function Selection MOP Ref Memory	This parameter is used to retain the held frequency reference in U1-01 (d1-01) when power is removed. This function is available when the multi-function inputs “accel/decel ramp hold” or “up/down” commands are selected (H1-XX = A or 10 and 11). 0: Disabled 1: Enabled	0 or 1	0	No	A	A	A	A	A	298H
d4-02	Trim Control Lvl Trim Control Lvl	Sets the amount of frequency reference to be added or subtracted as a percentage of maximum output frequency (E1-04) when multi-function inputs “trim control increase” and “trim control decrease” are selected (H1-XX = 1C and 1D).	0 to 100	10%	No	A	A	A	A	A	299H

■Torque Control: d5

User parameters for the torque control are shown in the following table.

Parameter Number	Name: Display	Description	Setting Range	Factory Setting	Change during Operation	Control Methods: V/f	V/f with PG	Open Loop Vector 1	Flux Vector	Open Loop Vector 2	MODBUS Register
d5-01	Torque Control Selection Torq Control Sel	Selects speed or torque control. The torque reference is set via analog input A2 or A3 when it is set for "torque reference" (H3-05 or H3-09 = 13). Torque reference is set as a percentage of motor rated torque. To use this function for switching between speed and torque control, set to 0 and set a multi-function input to "speed/torque control change" (H1-xx = 71). 0: Speed Control (controlled by C5-01 to C5-07) 1: Torque Control	0 or 1	0	No	No	No	No	A	A	29AH
d5-02	Torque Reference Delay Time Torq Ref Filter	Sets the torque reference delay time in milliseconds. This function can be used to correct for noise in the torque control signal or the responsiveness with the host controller. When oscillation occurs during torque control, increase the set value.	0 to 1000	0ms*	No	No	No	No	A	A	29BH

Parameter Number	Name: Display	Description	Setting Range	Factory Setting	Change during Operation	Control Methods: V/f	V/f with PG	Open Loop Vector 1	Flux Vector	Open Loop Vector 2	MODBUS Register
d5-03	Speed Limit Selection Speed Limit Sel	Sets the speed limit command method for the torque control method. 1: Analog Input - Limited by the output of the soft starter (b1-01 selection and active acceleration/ deceleration and S-curve settings). 2: Program Setting - Limited by d5-04 setting value.	1 or 2	1	No	No	No	No	A	A	29CH
d5-04	Speed Limit Speed Lmt Value	Sets the speed limit during torque control as a percentage of the maximum output frequency (E1-04). This function is enabled when d5-03 is set to 2. Directions are as follows. +: run command direction -: run command opposite direction	-120 to +120	0%	No	No	No	No	A	A	29DH
d5-05	Speed Limit Bias Speed Lmt Bias	Set the speed limit bias as a percentage of the maximum output frequency (E1-04). Bias is given to the specified speed limit. It can be used to adjust the margin for the speed limit.	0 to 120	10%	No	No	No	No	A	A	29EH
d5-06	Speed/torque Control Switchover Timer Ref Hold Time	Set the delay time from inputting the multi-function input “speed/torque control change” (from On to OFF or OFF to ON) until the control is actually changed, inms units. This function is enabled when the multi-function input “speed/torque control change” is set. While in the speed/torque control switching timer, the analog inputs hold the value present when the "speed/torque control change" is received.	0 to 1000	0ms	No	No	No	No	A	A	29FH
d5-07	Rotational Direction Limit Selection Drctn SpdLmt Sel	0: Disabled. 1: Enabled. Normally set to "1" (enabled). This parameter should be enabled when motor control values are set the same for both rotational directions (such as machinery for winding or rewinding).	0 to 1	1	No	No	No	No	No	A	2A6H

* Factory setting will change according to the control mode (factory settings for Flux Vector Control are shown here).

■Field Control: d6

User parameters for the field weakening command are shown in the following table.

Parameter Number	Name: Display	Description	Setting Range	Factory Setting	Change during Operation	Control Methods: V/f	V/f with PG	Open Loop Vector 1	Flux Vector	Open Loop Vector 2	MODBUS Register
d6-01	Magnetic Field Weakening Level Field-Weak Lvl	Sets the Drive output voltage when the multi-function input "field weakening command" is input (H1-xx = 63). Sets as a percentage taking the voltage set in the V/f pattern as 100%.	0 to 100	80%	No	A	A	No	No	No	2A0H
d6-02	Magnetic Field Frequency Field-Weak Freq	Sets the lower limit (in Hz) of the frequency range where field weakening control is valid. The field weakening command is valid only at frequencies above this setting and only when output frequency is in agreement with the current output frequency (speed agree).	0.0 to 400.0	0.0Hz	No	A	A	No	No	No	2A1H
d6-03	Magnetic Field Forcing Function Selection Field Force Sel	Set the magnetic field forcing function. 0: Disabled 1: Enabled	0 or 1	0	No	No	No	A	A	A	2A2H
d6-05	AϕR Time Constant A PHI R Filter	Sets the A-phase-R time constant in relation to the motor secondary circuit time constant by the amount of increase. Note: A-phase-R Time Constant = (Secondary Circuit Time Constant) x (d6-05). When d6-05 = 0, then A-phase-R is inactive. When d6-05 = 0, it becomes the lower limit for 200ms internal to the drive.	0.00 to 10.00	1.00	No	No	No	No	No	A	2A4H
d6-06	Magnetic Field Forcing Limit Field Force Limit	Sets the upper limit of the excitation current command during magnetic field forcing. A setting of 100% is equal to motor no-load current, E2-03.	100 to 400	400%	No	No	No	A	A	A	2A5H

◆ Motor Setup Parameters: E

The following settings are made with the motor setup parameters (E parameters): V/f characteristics and motor setup parameters.

■V/f Pattern: E1

User parameters for V/f characteristics are shown in the following table.

Parameter Number	Name / Display	Description	Setting Range	Factory Setting	Change during Operation	Control Methods: V/f	V/f with PG	Open Loop Vector 1	Flux Vector	Open Loop Vector 2	MODBUS Register
E1-01	Input Voltage Setting / Input Voltage	Set to the nominal voltage of the incoming line. Sets the maximum and base voltage used by preset V/F patterns (E1-03 = 0 to E), adjusts the levels of Drive protective features (e.g. Overvoltage, braking resistor turn-on, stall prevention, etc.). NOTE: DRIVE INPUT VOLTAGE (NOT MOTOR VOLTAGE) MUST BE SET IN E1-01 FOR THE PROTECTIVE FEATURES OF THE DRIVE TO FUNCTION PROPERLY. FAILURE TO DO SO MAY RESULT IN EQUIPMENT DAMAGE AND/OR PERSONAL INJURY.	155.0 to 255.0 (240V) 310.0 to 510.0 (480V)	230.0V or 460.0 V	No	Q	Q	Q	Q	Q	300H
E1-03	V/f Pattern Selection / V/F Selection	Set to the type of motor being used and the type of application. The Drive operates utilizing a set V/F pattern to determine the appropriate output voltage level for each commanded speed. There are 15 different preset V/F patterns to select from (E1-03 = 0 to E) with varying voltage profiles, base levels (base level = frequency at which maximum voltage is reached), and maximum frequencies. There are also settings for Custom V/F patterns that will use the settings of parameters E1-04 through E1-13. E1-03 = F selects a custom V/F pattern with an upper voltage limit and E1-03 = FF selects a custom V/F pattern without an upper voltage limit. 0: 50Hz 1: 60Hz Saturation 2: 50Hz Saturation 3: 72Hz (60Hz Base) 4: 50Hz VT1 5: 50Hz VT2 6: 60Hz VT1 7: 60Hz VT2 8: 50Hz HST1 9: 50Hz HST2 A: 60Hz HST1 B: 60Hz HST2 C: 90Hz (60Hz Base) D: 120Hz (60Hz Base) E: 180Hz (60Hz Base) F: Custom V/F FF: Custom w/o limit	0 to FF	F	No	Q	Q	No	No	No	302H

Parameter Number	Name: Display	Description	Setting Range	Factory Setting	Change during Operation	Control Methods: V/f	V/f with PG	Open Loop Vector 1	Flux Vector	Open Loop Vector 2	MODBUS Register
E1-04	Maximum Output Frequency Max Frequency	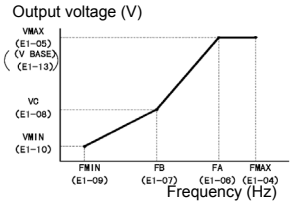 These parameters are only applicable when V/f Pattern Selection is set to Custom (E1-03 = F or FF). To set V/f characteristics in a straight line, set the same values for E1-07 and E1-09. In this case, the setting for E1-08 will be disregarded. Be sure that the four frequencies are set in the following manner or else an OPE10 fault will occur: E1-04 (FMAX) ≥ E1-11 ≥ E1-06 (FA) > E1-07 (FB) ≥ E1-09 (FMIN) Note: Setting parameter E1-01 to zero is also acceptable	40.0 to 400.0 *5	60.0Hz *2	No	Q	Q	Q	Q	Q	303H
E1-05	Maximum Output Voltage Max Voltage		0.0 to 255.0 (240V) 0.0 to 510.0 (480V)	230.0V or 460.0V	No	Q	Q	Q	Q	Q	304H
E1-06	Base Frequency Base Frequency		0.0 to 400.0 *5	60.0Hz *2	No	Q	Q	Q	Q	Q	305H
E1-07	Mid. Output Frequency A Mid Frequency A		0.0 to 400.0	3.0Hz *2	No	A	A	A	No	No	306H
E1-08	Mid. Output Voltage A Mid Voltage A		0.0 to 255.0 (240V) 0.0 to 510.0 (480V)	12.6 Vac or 25.3 Vac *2	No	A	A	A	No	No	307H
E1-09	Minimum Output Frequency Min Frequency		0.0 to 400.0 *5	0.5Hz *2	No	Q	Q	Q	A	Q	308H
E1-10	Minimum Output Voltage Min Voltage		0.0 to 255.0 (240V) 0.0 to 510.0 (480V)	2.3 Vac or 4.6 Vac *2	No	A	A	A	No	No	309H
E1-11	Mid. Output Frequency B Mid Frequency B	Set only when the V/F pattern is finely adjusted in the constant power (HP) area above base speed. Adjustment is not normally required.	0.0 to 400.0 *5	0.0Hz *3	No	A	A	A	A	A	30AH
E1-12	Mid. Output Voltage B Mid Voltage B		0.0 to 255.0 (240V) 0.0 to 510.0 (480V)	0.0 Vac *3	No	A	A	A	A	A	30BH

5

Parameter Number	Name / Display	Description	Setting Range	Factory Setting	Change during Operation	Control Methods: V/f	V/f with PG	Open Loop Vector 1	Flux Vector	Open Loop Vector 2	MODBUS Register
E1-13	Base Voltage / Base Voltage	Set only when the V/F pattern is finely adjusted in the constant power (HP) area above base speed. Adjustment is not normally required.If E1-13 = 0.0, then value in E1-05 is used for E1-13. Auto-Tuning sets this value.	0.0 to 255.0 (240V) 0.0 to 510.0 (480V)	0.0 Vac *4	No	A	A	Q	Q	Q	30CH

* 2. The factory setting will change when the control method is changed. (Open-loop vector 1 factory settings are given.)
* 3. E1-11 and E1-12 are disregarded when set to 0.0.
* 4. E1-13 is set to the same value as E1-05 by Autotuning.
* 5. Setting range changes to 0 thru 66.0 when operating in Vector 2 wo/PG . The upper limit for the setting range also depends on the upper limit in E1-04.

■Motor Setup: E2

Parameter Number	Name / Display	Description	Setting Range	Factory Setting	Change during Operation	Control Methods: V/f	V/f with PG	Open Loop Vector 1	Flux Vector	Open Loop Vector 2	MODBUS Register
E2-01	Motor Rated current / Motor Rated FLA	Sets the motor nameplate full load current in amperes (A). This value is automatically set during Auto-Tuning.	0.32 to 6.40 *2	1.90 A *1	No	Q	Q	Q	Q	Q	30EH
E2-02	Motor Rated Slip / Motor Rated Slip	Sets the motor rated slip in hertz (Hz). This value is automatically set during rotational Auto-Tuning.	0.00 to 20.00	2.90Hz *1	No	A	A	A	A	A	30FH
E2-03	Motor No-load Current / No-Load Current	Sets the magnetizing current of the motor as a percentage of full load amps (E2-01). This value is automatically set during rotational Auto-Tuning.	0.00 to 1.89 *3	1.20 A *1	No	A	A	A	A	A	310H
E2-04	Number of Motor Poles / Number of Poles	Sets the number of motor poles. This value is automatically set during Auto-Tuning.	2 to 48	4 poles	No	No	Q	No	Q	Q	311H
E2-05	Motor Line-to-line Resistance / Term Resistance	Sets the phase-to-phase motor resistance in ohms. This value is automatically set by Auto-Tuning.	0.000 to 65.000	9.842 Ω *1	No	A	A	A	A	A	312H
E2-06	Motor Leak Inductance / Leak Inductance	Sets the voltage drop due to motor leakage inductance as a percentage of the motor rated voltage. This parameter is automatically set during Auto-Tuning.	0.0 to 40.0	18.2% *1	No	No	No	A	A	A	313H
E2-07	Motor Iron-core Saturation Coefficient 1 / Saturation Comp1	Sets the motor iron saturation coefficient at 50% of magnetic flux. This value is automatically set during rotational Auto-Tuning.	0.00 to 0.50	0.50	No	No	No	A	A	A	314H
E2-08	Motor Iron-core Saturation Coefficient 2 / Saturation Comp2	Sets the motor iron saturation coefficient at 75% of magnetic flux. This value is automatically set during rotational Auto-Tuning.	0.5 to 0.75	0.75	No	No	No	A	A	A	315H

Parameter Number	Name: Display	Description	Setting Range	Factory Setting	Change during Operation	Control Methods: V/f	V/f with PG	Open Loop Vector 1	Flux Vector	Open Loop Vector 2	MODBUS Register
E2-09	Motor Mechanical Loss Mechanical Loss	Sets the motor mechanical loss as a percentage of motor rated power (kW) capacity. Adjust in the following circumstances: -when torque loss is large due to motor bearing friction. -when the torque loss in the load is large.	0.0 to 10.0	0.0%	No	No	No	A	A	A	316H
E2-10	Motor Iron Loss for Torque Compensation Tcomp Iron Loss	Sets the motor iron loss in watts (W).	0 to 65535	14 W *1	No	A	A	No	No	No	317H
E2-11	Motor Rated Output Mtr Rated Power	Sets the motor rated power in kilowatts (kW). This value is automatically set during Auto-Tuning. 1HP = 0.746kW	0.00 to 650.00	0.40 kW *1	No	Q	Q	Q	Q	Q	318H
E2-12	Motor Iron-core Saturation Coefficient 3 Saturation Comp3	Sets the motor iron saturation coefficient at 130% of magnetic flux. This value is automatically set during rotational Auto-Tuning.	1.30 to 5.00	1.30	No	No	No	A	A	A	328H

User parameters for motor 1 are shown in the following table.

* 1. The factory setting depends upon the Drive capacity. The value for a 200-240V class Drive of 0.4 kW is given.
* 2. The setting range is 10% to 200% of the Drive's rated output current. The value for a 200-240V class Drive of 0.4 kW is given.
* 3. The factory setting depends upon the Drive capacity. The value for a 200-240V class Drive of 0.4 kW is given.

■ Motor 2 V/f Pattern: E3

User parameters for motor 2 V/f characteristics are shown in the following table.

Parameter Number	Name: Display	Description	Setting Range	Factory Setting	Change during Operation	Control Methods: V/f	V/f with PG	Open Loop Vector 1	Flux Vector	Open Loop Vector 2	MODBUS Register
E3-01	Motor 2 Control Method Selection Control Method	0: V/f control 1: V/f control with PG 2: Open-loop vector control 3: Flux vector control 4: Open-loop vector control 2	0 to 4	2	No	A	A	A	A	A	319H

Parameter Number	Name: Display	Description	Setting Range	Factory Setting	Change during Operation	Control Methods: V/f	V/f with PG	Open Loop Vector 1	Flux Vector	Open Loop Vector 2	MODBUS Register
E3-02	Motor 2 Maximum Output Frequency (FMAX) Max Frequency		40.0 to 400.0 *3	60.0Hz	No	A	A	A	A	A	31AH
E3-03	Motor 2 Maximum Output Voltage (VMAX) Max Voltage		0.0 to 255.0 (240V) 0.0 to 510.0 (480V)	230.0V or 460.0V *2	No	A	A	A	A	A	31BH
E3-04	Motor 2 Base Frequency (FA) Base Frequency	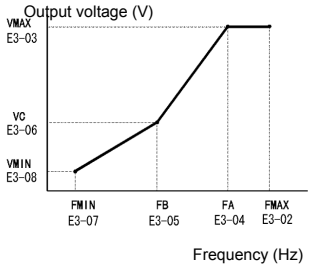	0.0 to 400.0	60.0Hz	No	A	A	A	A	A	31CH
E3-05	Motor 2 Mid. Output Frequency 1 (FB) Mid Frequency	To set V/f characteristics in a straight line, set the same values for E3-05 and E3-07. In this case, the setting for E3-06 will be disregarded. Always ensure that the four frequencies are set in the following manner or else an OPE10 fault will occur: E3-02 (FMAX) ≥ E3-04 (FA) ≥ E3-05 (FB) ≥ E3-07 (FMIN)	0.0 to 400.0	3.0Hz *2	No	A	A	A	No	No	31DH
E3-06	Motor 2 Mid. Output Voltage 1 (VA) Mid Voltage		0.0 to 255.0 (240V) 0.0 to 510.0 (480V)	12.6 Vac or 25.3 Vac *1	No	A	A	A	No	No	31EH
E3-07	Motor 2 Minimum Output Frequency (FMIN) Min Frequency		0.0 to 400.0	0.5Hz *2	No	A	A	A	A	A	31FH
E3-08	Motor 2 Minimum Output Voltage (VMIN) Min Voltage		0.0 to 255.0 (240V) 0.0 to 510.0 (480V)	2.3 Vac or 4.6 Vac *1	No	A	A	A	No	No	320H

* 1. These are values for a 200-240V class Drive. Values for a 380-480V class Drive are double.
* 2. The factory setting will change when the control method is changed. (V/f control factory settings are given.)
* 3. The setting range is 0 to 66.0 for open-loop vector control 2.

■Motor 2 Setup: E4

User parameters for motor 2 are shown in the following table.

Parameter Number	Name: Display	Description	Setting Range	Factory Setting	Change during Operation	Control Methods: V/f	V/f with PG	Open Loop Vector 1	Flux Vector	Open Loop Vector 2	MODBUS Register
E4-01	Motor 2 Rated Current Motor Rated FLA	Sets the motor 2 name plate full load current in amperes (A). This value is automatically set during Auto-Tuning.	0.32 to 6.40 *2	1.90 A *1	No	A	A	A	A	A	321H
E4-02	Motor 2 Rated Slip Motor Rated Slip	Sets the rated slip of motor 2 in hertz (Hz). This value is automatically set during rotational Auto-Tuning.	0.00 to 20.00	2.90Hz *1	No	A	A	A	A	A	322H
E4-03	Motor 2 No-load Current No-Load Current	Sets the magnetizing current of motor 2 in percentage of full load current (E4-01). This value is automatically set during rotational Auto-Tuning.	0.00 to 1.89 *3	1.20 A *1	No	A	A	A	A	A	323H
E4-04	Motor 2 NumberofPoles (number of poles) Number of Poles	Sets the number of poles of motor 2. This value is automatically set during Auto-Tuning.	2 to 48	4 poles	No	No	A	No	A	A	324H
E4-05	Motor 2 Line-to-line Resistance Term Resistance	Sets the phase-to-phase resistance of motor 2 in ohms. This value is automatically set by the Auto-Tuning.	0.000 to 65.000	9.842 Ω *1	No	A	A	A	A	A	325H
E4-06	Motor 2 Leak Inductance Leak Inductance	Sets the voltage drop due to motor leakage inductance as a percentage of rated voltage of motor 2. This value is automatically set during Auto-Tuning.	0.0 to 40.0	18.2% *1	No	No	No	A	A	A	326H
E4-07	Motor 2 Rated Output Mtr Rated Power	Sets the rated power of motor 2 in kilowatts (kW). This value is automatically set during Auto-Tuning.	0.00 to 650.00	0.40kW *1	No	A	A	A	A	A	327H
E4-08	Slip Compensation Gain - Motor 2 SlpCmp Gain Mtr2	This parameter can help to increase speed precision when working on a load, although normally adjustment is not required. - When speed is less than that desired value, increase the set value. - When speed is higher than the desired value, decrease the set value *This parameter functions as gain suppression when in flux vector mode.	0.0 to 2.5	1.0 *1	Yes	A	No	A	A	A	33EH

Parameter Number	Name Display	Description	Setting Range	Factory Setting	Change during Operation	Control Methods V/f	V/f with PG	Open Loop Vector 1	Flux Vector	Open Loop Vector 2	MODBUS Register
E4-09	ASR Proportional Gain - Motor 2 ASR P Gain Mtr2	Sets the proportional gain for the speed control loop (ASR.)	0.00 to 300.00 *2	20.00 *3	Yes	No	A	No	A	A	33FH
E4-10	ASR Integral Time - Motor 2 ASR I Time Mtr2	Sets the speed control loop (ASR) integral time in seconds.	0.000 to 10.000	0.500s *3	Yes	No	A	No	A	A	340H
E4-11	Torque Compensation Gain – Motor 2 TrqCmp Gain Mtr2	Magnifies the torque compensation gain. Normally this parameter does not require change, however adjustments can be made as follows: - When the motor cable is long, increase the setting. - When using a motor with a smaller capacity than the drive (the largest motor being used), increase this setting. If the motor begins to vibrate, adjust the value set so that the output current doesn't exceed the drive's rated output current when operating at low speeds.	0.00 to 2.50	1	Yes	A	A	A	No	No	341H

* 1. The factory setting depends upon the Drive capacity. The value for a 200-240V class Drive of 0.4 kW is given.

* 2. The setting range is 10% to 200% of the Drive's rated output current. The values for a 200-240V class Drive of 0.4 kW is given.

* 3. If a multi-function input is set for motor 2 (H1-□□ = 16), the factory setting will depend upon the Drive capacity. The value for a 200-240V class Drive of 0.4 kW is given.

◆ Option Parameters: F

The following settings are made with the option parameters (F parameters): Settings for Option Cards.

■PG Option Setup: F1

User parameters for the PG Speed Control Card are shown in the following table.

Parameter Number	Name: Display	Description	Setting Range	Factory Setting	Change during Operation	Control Methods: V/f	V/f with PG	Open Loop Vector 1	Flux Vector	Open Loop Vector 2	MODBUS Register
F1-01	PG Parameter PG Pulses/ Rev	Sets the number of pulses per revolution (PPM) of the encoder (pulse generator).	0 to 60000	1024	No	No	Q	No	Q	No	380H
F1-02	Operation Selection at PG Open Circuit (PGO) PG Fdbk Loss Sel	Sets stopping method when a PG open circuit fault (PGO) occurs. See parameter F1-14. 0: Ramp to stop - Decelerate to stop using the active deceleration time. 1: Coast to stop 2: Fast - Stop - Decelerate to stop using the deceleration time in C1-09. 3: Alarm Only - Drive continues operation.	0 to 3	1	No	No	A	No	A	No	381H
F1-03	Operation Selection at Overspeed (OS) PG Overspeed Sel	Sets the stopping method when an overspeed (OS) fault occurs. See F1-08 and F1-09. 0: Ramp to stop - Decelerate to stop using the active deceleration time. 1: Coast to stop 2: Fast - Stop - Decelerate to stop using the deceleration time in C1-09. 3: Alarm Only - Drive continues operation.	0 to 3	1	No	No	A	No	A	A	382H
F1-04	Operation Selection at Deviation PG Deviation Sel	Sets the stopping method when a speed deviation (DEV) fault occurs. See F1-10 and F1-11. 0: Ramp to stop - Decelerate to stop using the active deceleration time. 1: Coast to stop 2: Fast - Stop - Decelerate to stop using the deceleration time in C1-09. 3: Alarm Only - Drive continues operation.	0 to 3	3	No	No	A	No	A	A	383H

Parameter Number	Name: Display	Description	Setting Range	Factory Setting	Change during Operation	Control Methods: V/f	V/f with PG	Open Loop Vector 1	Flux Vector	Open Loop Vector 2	MODBUS Register
F1-05	PG Rotation Selection PG Rotation Sel	0: Fwd=C.C.W. - Phase A leads with forward run command. (Phase B leads with reverse run command.) 1: Fwd=C.W. - Phase B leads with forward run command. (Phase A leads with reverse run command.)	0 or 1	0	No	No	A	No	A	No	384H
F1-06	PG division rate (PG pulse monitor) PG Output Ratio	Sets the division ratio for the pulse monitor of the PG-B2 encoder feedback option board. This function is not available with the PG-X2 option board. Division ratio = (1+ n) /m (where n=0 or 1 & m=1 to 32) F1-06 = □ □□ (n, m) The first digit of the value of F1-06 stands for n, the second and the third stand for m. (from left to right). The possible division ratio settings are: 1/32 ≤ F1-06 ≤ 1.	1 to 132	1	No	No	A	No	A	No	385H
F1-07	Integral Function During Accel/decel Selection PG Ramp PI/I Sel	Sets integral control during acceleration/deceleration to either enabled or disabled. 0: Disabled (The integral function is not used while accelerating or decelerating.) 1: Enabled (The integral function is used at all times.)	0 or 1	0	No	No	A	No	No	No	386H
F1-08	Overspeed Detection Level PG Overspd Level	Configures the overspeed fault (OS) detection. OS fault will occur, if the motor speed feedback is greater than the F1-08 setting for a time longer than F1-09. F1-08 is set as a percentage of the maximum output frequency (E1-04). See F1-03.	0 to 120	115%	No	No	A	No	A	A	387H
F1-09	Overspeed Detection Delay Time PG Overspd Time		0.0 to 2.0	0.0 s *	No	No	A	No	A	A	388H

Parameter Number	Name: Display	Description	Setting Range	Factory Setting	Change during Operation	Control Methods: V/f	V/f with PG	Open Loop Vector 1	Flux Vector	Open Loop Vector 2	MODBUS Register
F1-10	Excessive Speed Deviation Detection Level PG Deviate Level	Configures the speed deviation fault (DEV) detection. DEV fault will occur if the speed deviation is greater than the F1-10 setting for a time longer than F1-11. F1-10 is set as a percentage of the maximum output frequency (E1-04). Speed deviation is the difference between actual motor speed and the frequency reference command. See F1-04.	0 to 50	10%	No	No	A	No	A	A	389H
F1-11	Excessive Speed Deviation Detection Delay Time PG Deviate Time		0.0 to 10.0	0.5 s	No	No	A	No	A	A	38AH
F1-12	Number of PG Gear Teeth 1 PG # Gear Teeth1	Sets the gear ratio between the motor shaft and the encoder (PG). $\frac{\text{Input pulses from PG} \times 60}{\text{F1-01}} \times \frac{\text{F1-13}}{\text{F1-12}}$ A gear ratio of 1 will be used if either of these parameters is set to 0. This function is not available in flux vector control.	0 to 1000	0	No	No	A	No	No	No	38BH
F1-13	Number of PG Gear Teeth 2 PG # Gear Teeth2			0	No	No	A	No	No	No	38CH
F1-14	PG Open-circuit Detection Time PGO Detect Time	Configures the PG open (PGO) function. PGO will be detected if no PG pulses are detected for a time longer than F1-14. See F1-02.	0.0 to 10.0	2.0 s	No	No	A	No	A	No	38DH
F1-21	PG Parameter 2 PG Pulses/ Rev 2	Sets the PG pulse count for Motor-2 (pulse selector, encoder). Set a value that is not significantly less than the pulse count per rotation in Motor-1.	0 to 60000	1024 *1	No	No	Q	No	Q	No	3B0H
F1-22	PG Rotational Direction Setting 2 PG Rotation Sel2	Sets the direction of rotation for the PG connected to Motor-2. 0: From phase-A when rotating forwards (from phase-B when in reverse). 1: From phase-B when rotating forwards (from phase-A when in reverse).	0 to 1	0	No	No	Q	No	Q	No	3B1H

* The factory setting will change when the control method is changed. (Flux vector control factory settings are given.)

*1 Default settings changed based on the initialization mode (o2-09).

Parameter Number	Name: Display	Description	Setting Range	Factory Setting	Change during Operation	Control Methods: V/f	V/f with PG	Open Loop Vector 1	Flux Vector	Open Loop Vector 2	MODBUS Register
F1-23	PG Gear Teeth Count 1 PG Gear Teeth1	Sets the number of gear teeth (deceleration ratio) between Motor-2 and the pulse generator. [(RPMs x 60)/PGpulseCount] x (F1-24)/(F1-23) If either value is zero, then the decleration ratio will equal "1".	0 to 1000	0	No	No	A	No	No	No	3B2H
F1-24	PG Gear Teeth Count 2 PGO Gear Teeth2		0 to 1000	0	No	No	A	No	No	No	3B3H
F1-25	Hardware Disconnected Detection Selection CH1 HW PGO ch1	Enables or disables the drive from detecting when the PG option on CH1 has been disconnected. 0: Disabled. 1: Enabled. When using PG-T2 or Z2, this setting is enabled.	0 to 1	1	No	No	A	No	A	No	3B4H
F1-26	Hardware Disconnected Detection Selection CH2 HW PGO ch2		0 to 1	1	No	No	A	No	A	No	3B5H

■Analog Reference Card: F2

User parameters for the Analog Reference Card are shown in the following table.

Parameter Number	Name: Display	Description	Setting Range	Factory Setting	Change during Operation	Control Methods: V/f	V/f with PG	Open Loop Vector 1	Flux Vector	2	MODBUS Register
F2-01	AI-14 Input Selection AI-14 Input Sel	Sets the function for channel 1 to 3 of the AI-14B analog input reference option board. 0: 3-channel individual (Channel 1: terminal A1, Channel 2: terminal A2, Channel 3: terminal A3) 1: 3-channel addition (Summed values of channels 1 to 3 is the frequency reference) When set to 0, select 1 for b1-01. In this case, the multi-function input "Option/Inverter selection" cannot be used.	0 or 1	0	No	A	A	A	A	A	38FH

■Digital Reference Card: F3

User parameters for the Digital Reference Card are shown in the following table.

Parameter Number	Name: Display	Description	Setting Range	Factory Setting	Change during Operation	Control Methods: V/f	V/f with PG	Open Loop Vector 1	Flux Vector	Open Loop Vector 2	MODBUS Register
F3-01	DI-08 / DI-16H2 Input Selection DI Input	Sets the function of the DI-08 or the DI-16H2 digital input option board. 0: BCD 1% unit 1: BCD 0.1% unit 2: BCD 0.01% unit 3: BCD 1Hz unit 4: BCD 0.1Hz unit 5: BCD 0.01Hz unit 6: BCD (5-digit) 0.01Hz unit (only effective when DI-16H2 is used.) 7: Binary input When o1-03 is set to 2 or higher, the input will be BCD, and the units will change to the o1-03 setting.	0 to 7	0	No	A	A	A	A	A	390H

■Analog Monitor Cards: F4

User parameters for the Analog Monitor Card are shown in the following table.

Parameter Number	Name: Display	Description	Setting Range	Factory Setting	Change during Operation	Control Methods: V/f	V/f with PG	Open Loop Vector 1	Flux Vector	Open Loop Vector 2	MODBUS Register
F4-01	AO-08/ AO-12 Channel 1 Monitor Selection AO Ch1 Sel	Sets the number of the monitor item to be output. (U1-oo). The following settings cannot be used: 4, 10 to 14, 25, 28, 29, 30, 34, 35, 39, 40, 41.	1 to 45	2	No	A	A	A	A	A	391H
F4-02	AO-08/ AO-12 Channel 1 Gain AO Ch1 Gain	Sets the channel 1 gain. Ex: Set F4-02 = 50% to output 100% at 5.0V output.	0.0 to 1000.0	100%	Yes	A	A	A	A	A	392H
F4-03	AO-08/ AO-12 Channel 2 Monitor Selection AO Ch2 Select	Sets the number of the monitor item to be output. (U1-xx). The following settings cannot be set: 4, 10 to 14, 25, 28, 29, 30, 34, 39, 40, 41.	1 to 45	3	No	A	A	A	A	A	393H

Parameter Number	Name: Display	Description	Setting Range	Factory Setting	Change during Operation	Control Methods: V/f	V/f with PG	Open Loop Vector 1	Flux Vector	Open Loop Vector 2	MODBUS Register
F4-04	AO-08/ AO-12 Channel 2 Gain AO Ch2 Gain	Sets the channel 2 gain. In order to adjust the meter, 100% of the appropriate output is multiplied for the gain setting, and the bias amount is added and then output. See F4-02 when stopped in Quick, Advanced, or Verify mode. -If 05 appears on the setting screen, then CH1 is used. See F4-04 when stopped in Quick, Advanced, or Verify mode. -If 06 appears on the setting screen, then CH2 is used. Ex: Set F4-04 = 50% to output 100% at 5.0V output.	0.0 to 1000.0	50.0%	Yes	A	A	A	A	A	394H
F4-05	AO-08/AO-12 Channel 1 Output Bias AO Ch1 Bias	Sets the channel 1 bias (100%/10V). Ex: Set F4-05 = 50% to output 0% at 5.0V output.	-110.0 to 110.0	0.0%	Yes	A	A	A	A	A	395H
F4-06	AO-08/AO-12 Channel 2 Output Bias AO Ch2 Bias	Sets the channel 2 bias (100%/10V). Ex: Set F4-06 = 50% to output 0% at 5.0V output.	-110.0 to 110.0	0.0%	Yes	A	A	A	A	A	396H
F4-07	AO-12 Channel 1 Signal Level AO Opt Level Ch1	Sets the range of the voltage output. 0: 0 to 10Vdc 1: -10 to +10Vdc	0 or 1	0	No	A	A	A	A	A	397H
F4-08	AO-12 Channel 2 Signal Level AO Opt Level Ch2		0 or 1	0	No	A	A	A	A	A	398H

■Digital Output Card (DO-02 and DO-08): F5

User parameters for the Digital Output Card are shown in the following table.

Parameter Number	Name: Display	Description	Setting Range	Factory Setting	Change during Operation	Control Methods: V/f	V/f with PG	Open Loop Vector 1	Flux Vector	Open Loop Vector 2	MODBUS Register
F5-01	DO-02/ DO-08 Channel 1 Output Selection DO Ch1 Select	Sets the digital output function number for channel 1. See the H2 parameter group for possible selections. Enabled when digital output card DO-02 or DO-08 is used.	0 to 37	0	No	A	A	A	A	A	399H
F5-02	DO-02/ DO-08 Channel 2 Output Selection DO Ch2 Select	Sets the digital output function number for channel 2. See the H2 parameter group for possible selections. Enabled when digital output card DO-02 or DO-08 is used.	0 to 37	1	No	A	A	A	A	A	39AH
F5-03	DO-08 Channel 3 Output Selection DO Ch3 Select	Sets the digital output function number for channel 3. See the H2 parameter group for possible selections. Enabled when digital output card DO-02 or DO-08 is used.	0 to 37	2	No	A	A	A	A	A	39BH
F5-04	DO-08 Channel 4 Output Selection DO Ch4 Select	Sets the digital output function number for channel 4. See the H2 parameter group for possible selections. Enabled when digital output card DO-02 or DO-08 is used.	0 to 37	4	No	A	A	A	A	A	39CH
F5-05	DO-08 Channel 5 Output Selection DO Ch5 Select	Sets the digital output function number for channel 5. See the H2 parameter group for possible selections. Enabled when digital output card DO-02 or DO-08 is used.	0 to 37	6	No	A	A	A	A	A	39DH
F5-06	DO-08 Channel 6 Output Selection DO Ch6 Select	Sets the digital output function number for channel 6. See the H2 parameter group for possible selections. Enabled when digital output card DO-02 or DO-08 is used.	0 to 37	37	No	A	A	A	A	A	39EH
F5-07	DO-08 Channel 7 Output Selection DO Ch7 Select	Sets the digital output function number for channel 7. See the H2 parameter group for possible selections. Enabled when digital output card DO-02 or DO-08 is used.	0 to 37	0F	No	A	A	A	A	A	39FH

Parameter Number	Name: Display	Description	Setting Range	Factory Setting	Change during Operation	Control Methods: V/f	V/f with PG	Open Loop Vector 1	Flux Vector	Open Loop Vector 2	MODBUS Register
F5-08	DO-08 Channel 8 Output Selection DO Ch8 Select	Sets the digital output function number for channel 8. See the H2 parameter group for possible selections. Enabled when digital output card DO-02 or DO-08 is used.	0 to 37	0F	No	A	A	A	A	A	3A0H
F5-09	DO-08 Output Mode Selection DO-08 Selection	Sets the function of the DO-08 digital output option board. 0: 8-channel individual outputs. 1: Binary code output. 2: 8-channel Selected - Output according to F5-01 to F5-08 settings.	0 to 2	0	No	A	A	A	A	A	3A1H

■Communications Option Cards: F6

User parameters for a Communications Option Card are shown in the following table.

Parameter Number	Name: Display	Description	Setting Range	Factory Setting	Change during Operation	Control Methods: V/f	V/f with PG	Open Loop Vector 1	Flux Vector	Open Loop Vector 2	MODBUS Register
F6-01	Operation Selection after Communication Error Comm BUS Flt Sel	Selects the stopping method for a communication option board fault (BUS). Active only when a communication option board is installed and b1-01 or b1-02 = 3. 0: Ramp to Stop 1: Coast to Stop 2: Fast-Stop 3: Alarm Only	0 to 3	1	No	A	A	A	A	A	3A2H
F6-02	Selection of External Fault from Communication Option Board EF0 Detection	Selects the condition in which an EF0 fault is detected from a communication option board. Active only when a communication option board is installed and b1-01 or b1-02 = 3. 0: Always detected. 1: Detected only during operation.	0 or 1	0	No	A	A	A	A	A	3A3H
F6-03	Stopping Method for External Fault from Communication Option Board EF0 Fault Action	Selects the stopping method for an external fault from a communication option board (EF0). Active only when a communication option board is installed and b1-01 or b1-02 = 3. 0: Ramp to Stop 1: Coast to Stop 2: Fast-Stop 3: Alarm Only	0 to 3	1	No	A	A	A	A	A	3A4H

Parameter Number	Name: Display	Description	Setting Range	Factory Setting	Change during Operation	Control Methods: V/f	V/f with PG	Open Loop Vector 1	Flux Vector	Open Loop Vector 2	MODBUS Register
F6-04	Trace Sampling from Communication Option Board Trace Sample Tim	Sets the sample trace for the CP-916 option board.	0 to 60000	0	No	A	A	A	A	A	3A5H
F6-05	Current Monitor Unit Display Selection Current Unit Sel	Selects the current monitor scaling when using a communication option board. 0: Displayed in Amps 1: 100% / 8192 (12 bit binary number with 8192=100% Drive's rated current)	0 or 1	0	No	A	A	A	A	A	3A6H
F6-06	Torque Reference/ torque Limit Selection from Communication Option Torq Ref/Lmt Sel	Selects torque reference/ limit when using communications option board. 0: Disabled - Torque reference/limit from option board disabled 1: Enabled - Torque reference/limit from option board enabled.	0 or 1	0	No	No	No	No	A	A	3A7H

◆ Terminal Function Parameters: H

The following settings are made with the terminal function parameters (H parameters): Settings for external terminal functions.

■Multi-function Contact Inputs: H1

User parameters for multi-function contact inputs are shown in the following tables.

Parameter Number	Name: Display	Description	Setting Range	Factory Setting	Change during Operation	Control Methods: V/f	V/f with PG	Open Loop Vector 1	Flux Vector	Open Loop Vector 2	MODBUS Register
H1-01	Multi-Function Digital Input Terminal S3 Function Selection / Terminal S3 Sel	[Refer to table "Multi-function Contact Input Functions" for multi-function selections]	0 to 79	24	No	A	A	A	A	A	400H
H1-02	Multi-Function Digital Input Terminal S4 Function Selection / Terminal S4 Sel		0 to 79	14	No	A	A	A	A	A	401H
H1-03	Multi-Function Digital Input Terminal S5 Function Selection / Terminal S5 Sel		0 to 79	3 (0)*	No	A	A	A	A	A	402H
H1-04	Multi-Function Digital Input Terminal S6 Function Selection / Terminal S6 Sel		0 to 79	4 (3)*	No	A	A	A	A	A	403H
H1-05	Multi-Function Digital Input Terminal S7 Function Selection / Terminal S7 Sel		0 to 79	6 (4)*	No	A	A	A	A	A	404H
H1-06	Multi-Function Digital Input Terminal S8 Function Selection / Terminal S8 Sel		0 to 79	8 (6)*	No	A	A	A	A	A	405H

Parameter Number	Name: Display	Description	Setting Range	Factory Setting	Change during Operation	Control Methods: V/f	V/f with PG	Open Loop Vector 1	Flux Vector	Open Loop Vector 2	MODBUS Register
H1-07	Multi-Function Digital Input Terminal S9 Function Selection Terminal S9 Sel	Multi-Function Relay Input 7	0 to 79	5	No	A	A	A	A	A	406H
H1-08	Multi-Function Digital Input Terminal S10 Function Selection Terminal S10 Sel	Multi-Function Relay Input 8	0 to 79	32	No	A	A	A	A	A	407H
H1-09	Multi-Function Digital Input Terminal S11 Function Selection Terminal S11 Sel	Multi-Function Relay Input 9	0 to 79	7	No	A	A	A	A	A	408H
H1-10	Multi-Function Digital Input Terminal S12 Function Selection Terminal S12 Sel	Multi-Function Relay Input 10	0 to 79	15	No	A	A	A	A	A	409H

* Number in parenthesis indicates the initial value when using a 3-wire sequence.

Multi-function Contact Input Functions

Setting Value	Function	Control Methods: V/f	V/f with PG	Open Loop Vector 1	Flux Vector	Open Loop Vector 2
0	3-wire sequence (Forward/Reverse Run command)	Yes	Yes	Yes	Yes	Yes
1	Local/Remote selection (ON: Operator, OFF: Parameter setting)	Yes	Yes	Yes	Yes	Yes
2	Option/Inverter selection (ON: Option Card)	Yes	Yes	Yes	Yes	Yes
3	Multi-step speed reference 1 When H3-05 is set to 2, this function is combined with the master/auxiliary speed switch.	Yes	Yes	Yes	Yes	Yes
4	Multi-step speed reference 2	Yes	Yes	Yes	Yes	Yes
5	Multi-step speed reference 3	Yes	Yes	Yes	Yes	Yes
6	Jog frequency command (higher priority than multi-step speed reference)	Yes	Yes	Yes	Yes	Yes
7	Accel/decel time 1	Yes	Yes	Yes	Yes	Yes
8	External baseblock NO (NO contact: Baseblock at ON)	Yes	Yes	Yes	Yes	Yes
9	External baseblock NC (NC contact: Baseblock at OFF)	Yes	Yes	Yes	Yes	Yes
A	Acceleration/deceleration ramp hold (ON: Acceleration/deceleration stopped, frequency on hold)	Yes	Yes	Yes	Yes	Yes
B	OH2 alarm signal input (ON: OH2 will be displayed)	Yes	Yes	Yes	Yes	Yes

Setting Value	Function	Control Methods				
		V/f	V/f with PG	Open Loop Vector 1	Flux Vector	Open Loop Vector 2
C	Multi-function analog input selection (ON: Enable)	Yes	Yes	Yes	Yes	Yes
D	No V/f control with PG (ON: Speed feedback control disabled,) (normal V/f control)	No	Yes	No	No	No
E	Speed control integral reset (ON: Integral control disabled)	No	Yes	No	Yes	Yes
F	Not used (Set when a terminal is not used)	-	-	-	-	-
10	Up command (Always set with the down command)	Yes	Yes	Yes	Yes	Yes
11	Down command (Always set with the up command)	Yes	Yes	Yes	Yes	Yes
12	FJOG command (ON: Forward run at jog frequency d1-17)	Yes	Yes	Yes	Yes	Yes
13	RJOG command (ON: Reverse run at jog frequency d1-17)	Yes	Yes	Yes	Yes	Yes
14	Fault reset (Reset when turned ON)	Yes	Yes	Yes	Yes	Yes
15	Emergency stop. (Normally open condition: Deceleration to stop in deceleration time set in C1-09 when ON.)	Yes	Yes	Yes	Yes	Yes
16	Motor switch command (Motor 2 selection)	Yes	Yes	Yes	Yes	Yes
17	Emergency stop (Normally closed condition: Deceleration to stop in deceleration time set in C1-09 when OFF)	Yes	Yes	Yes	Yes	Yes
18	Timer function input (Functions are set in b4-01 and b4-02 and the timer function outputs are set in H1-□□ and H2-□□.)	Yes	Yes	Yes	Yes	Yes
19	PID control disable (ON: PID control disabled)	Yes	Yes	Yes	Yes	Yes
1A	Accel/Decel time 2	Yes	Yes	Yes	Yes	Yes
1B	Parameters write enable (ON: All parameters can be written-in. OFF: All parameters other than frequency monitor are write protected.)	Yes	Yes	Yes	Yes	Yes
1C	Trim control increase (ON: d4-02 frequency is added to analog frequency reference.)	Yes	Yes	Yes	Yes	Yes
1D	Trim control decrease (ON: d4-02 frequency is subtracted from analog frequency reference.)	Yes	Yes	Yes	Yes	Yes
1E	Analog frequency reference sample/hold	Yes	Yes	Yes	Yes	Yes
20 to 2F	External fault (Desired settings possible) Input mode: NO contact/NC contact, Detection mode: Normal/during operation	Yes	Yes	Yes	Yes	Yes
30	PID control integral reset (reset when reset command is input or when stopped during PID control)	Yes	Yes	Yes	Yes	Yes
31	PID control integral hold (ON: Hold)	Yes	Yes	Yes	Yes	Yes
32	Multi-step speed reference 4	Yes	Yes	Yes	Yes	Yes
34	PID soft starter	Yes	Yes	Yes	Yes	Yes
35	PID input characteristics switch	Yes	Yes	Yes	Yes	Yes
60	DC injection braking command (ON: Performs DC injection braking)	Yes	Yes	Yes	Yes	Yes
61	External search command 1 (ON: Speed search from maximum output frequency)	Yes	No	Yes	No	Yes
62	External search command 2 (ON: Speed search from set frequency)	Yes	No	Yes	No	Yes
63	Field weakening command (ON: Field weakening control set for d6-01 and d6-02)	Yes	Yes	No	No	No
64	External speed search command 3	Yes	Yes	Yes	Yes	Yes
65	KEB (deceleration at momentary power loss) command (NO contact)	Yes	Yes	Yes	Yes	Yes
66	KEB (deceleration at momentary power loss) command (NO contact)	Yes	Yes	Yes	Yes	Yes
67	Communications test mode (“Pass” is displayed when the communications test is passed.)	Yes	Yes	Yes	Yes	Yes
68	High-slip braking (HSB)	Yes	Yes	No	No	No
69	Jog 2 Closed = Drive runs at frequency reference entered into parameter d1-17. Direction is determined by FWD/REV input. Three-wire control only	No	Yes	Yes	Yes	Yes
6A	Drive Enable Closed = Drive will accept run command. Open = Drive will not run. If running , drive will stop per b1-03.	Yes	Yes	Yes	Yes	Yes

Setting Value	Function	Control Methods				
		V/f	V/f with PG	Open Loop Vector 1	Flux Vector	Open Loop Vector 2
71	Speed/torque control change (ON: Torque control)	No	No	No	Yes	Yes
72	Zero-servo command (ON: Zero-servo)	No	No	No	Yes	No
77	Speed control (ASR) proportional gain switch (ON: C5-03)	No	No	No	Yes	Yes
78	Polarity reversing command for external torque reference	No	No	No	Yes	Yes
79	Closed Brake Signal* Closed = Reverse polarity.	No	No	No	No	Yes

■ Multi-function Contact Outputs: H2

User parameters for multi-function outputs are shown in the following tables.

Parameter Number	Name: Display	Description	Setting Range	Factory Setting	Change during Operation	Control Methods: V/f	V/f with PG	Open Loop Vector 1	Flux Vector	Open Loop Vector 2	MODBUS Register
H2-01	Terminal M1-M2 Function Selection (relay) Term M1-M2 Sel	[Refer to table "H2-01 thru H2-05 Settings" for multi-function selections]	0 to 38	0	No	A	A	A	A	A	40BH
H2-02	Terminal M3-M4 Function Selection (relay) Term M3-M4 Sel		0 to 38	1	No	A	A	A	A	A	40CH
H2-03	Terminal M5-M6 Function Selection (Relay) Term M5-M6 Sel		0 to 38	2	No	A	A	A	A	A	40DH
H2-04	Terminal P3 Function Selection (Open Collector) Term P3 Sel		0 to 38	6	No	A	A	A	A	A	40EH
H2-05	Terminal P4 Function Selection (Open Collector) Term P4 Sel		0 to 38	10	No	A	A	A	A	A	40FH

Multi-function Contact Output Functions

Setting Value	Function	Control Methods				
		V/f	V/f with PG	Open Loop Vector 1	Flux Vector	Open Loop Vector 2
0	During run (ON: run command is ON or voltage is being output)	Yes	Yes	Yes	Yes	Yes
1	Zero-speed	Yes	Yes	Yes	Yes	Yes
2	Frequency agree 1 (L4-02 used.)	Yes	Yes	Yes	Yes	Yes
3	Desired frequency agree 1 (ON: Output frequency = ±L4-01, L4-02 used and during frequency agree)	Yes	Yes	Yes	Yes	Yes
4	Frequency (FOUT) detection 1 (ON: +L4-01 ≥ output frequency ≥ -L4-01, L4-02 used)	Yes	Yes	Yes	Yes	Yes
5	Frequency (FOUT) detection 2 (ON: Output frequency ≥ +L4-01 or output frequency ≤ -L4-01, L4-02 used)	Yes	Yes	Yes	Yes	Yes
6	Drive operation ready READY: After initialization, no faults	Yes	Yes	Yes	Yes	Yes
7	During DC bus undervoltage (UV) detection	Yes	Yes	Yes	Yes	Yes
8	During baseblock (ON: during baseblock)	Yes	Yes	Yes	Yes	Yes
9	Frequency reference selection (ON: Frequency reference from Operator)	Yes	Yes	Yes	Yes	Yes
A	Run command selection status (ON: Run command from Operator)	Yes	Yes	Yes	Yes	Yes
B	Overtorque/undertorque detection 1 NO (NO contact: Overtorque/undertorque detection at ON)	Yes	Yes	Yes	Yes	Yes
C	Loss of frequency reference (Effective when 1 is set for L4-05)	Yes	Yes	Yes	Yes	Yes
D	Braking resistor fault (ON: Resistor overheat or braking transistor fault)	Yes	Yes	Yes	Yes	Yes
E	Fault (ON: Digital Operator communications error or fault other than CPF00 and CPF01 has occurred.)	Yes	Yes	Yes	Yes	Yes
F	Not used. (Set when the terminals are not used.)	-	-	-	-	-
10	Minor fault (ON: Alarm displayed)	Yes	Yes	Yes	Yes	Yes
11	Fault reset command active	Yes	Yes	Yes	Yes	Yes
12	Timer function output	Yes	Yes	Yes	Yes	Yes
13	Frequency agree 2 (L4-04 used)	Yes	Yes	Yes	Yes	Yes
14	Desired frequency agree 2 (ON: Output frequency = L4-03, L4-04 used, and during frequency agree)	Yes	Yes	Yes	Yes	Yes
15	Frequency detection 3 (ON: Output frequency ≤ -L4-03, L4-04 used)	Yes	Yes	Yes	Yes	Yes
16	Frequency detection 4 (ON: Output frequency ≥ -L4-03, L4-04 used)	Yes	Yes	Yes	Yes	Yes
17	Overtorque/undertorque detection 1 NC (NC Contact: Torque detection at OFF)	Yes	Yes	Yes	Yes	Yes
18	Overtorque/undertorque detection 2 NO (NO Contact: Torque detection at ON)	Yes	Yes	Yes	Yes	Yes
19	Overtorque/undertorque detection 2 NC (NC Contact: Torque detection at OFF)	Yes	Yes	Yes	Yes	Yes
1A	During reverse run (ON: During reverse run)	Yes	Yes	Yes	Yes	Yes
1B	During baseblock 2 (OFF: During baseblock)	Yes	Yes	Yes	Yes	Yes
1C	Motor selection (Motor 2 selected)	Yes	Yes	Yes	Yes	Yes
1D	During regenerative operation (ON: During regenerative operation)	No	No	No	Yes	Yes
1E	Restart enabled (ON: Restart enabled)	Yes	Yes	Yes	Yes	Yes
1F	Restart enabled (ON: Restart enabled)	Yes	Yes	Yes	Yes	Yes

Setting Value	Function	Control Methods				
		V/f	V/f with PG	Open Loop Vector 1	Flux Vector	Open Loop Vector 2
1F	Motor overload (OL1, including OH3) pre-alarm (ON: 90% or more of the detection level)	Yes	Yes	Yes	Yes	Yes
20	Drive overheat (OH) pre-alarm (ON: Temperature exceeds L8-02 setting)	Yes	Yes	Yes	Yes	Yes
30	During torque limit (current limit) (ON: During torque limit)	No	No	Yes	Yes	Yes
31	During speed limit (ON: During speed limit)	No	No	No	Yes	Yes
32	Speed control circuit operating for torque control (except when stopped). The external torque reference will be limited if torque control is selected (internal torque reference < external torque reference). Output when the motor is rotating at the speed limit.	No	No	No	Yes	Yes
33	Zero-servo end (ON: Zero-servo function completed)	No	No	No	Yes	No
37	During run 2 (ON: Frequency output, OFF: Base block, DC injection braking, initial excitation, operation stop)	Yes	Yes	Yes	Yes	Yes
38	Drive is Enabled Closed = During drive enable, when the Drive Enable input is closed.	Yes	Yes	Yes	Yes	Yes

■Analog Inputs: H3

User parameters for analog inputs are shown in the following table.

Parameter Number	Name: Display	Description	Setting Range	Factory Setting	Change during Operation	Control Methods: V/f	V/f with PG	Open Loop Vector 1	Flux Vector	Open Loop Vector 2	MODBUS Register
H3-01	Terminal A1 Signal Level Selection Term A1 Signal	Sets the signal level of terminal A1. 0: 0 to 10Vdc 1: -10 to +10Vdc [11-bit plus polarity sign]	0 to 1	0	No	A	A	A	A	A	410H
H3-02	Terminal A1 Gain Setting Terminal A1 Gain	Sets the output level when 10V is input, as a percentage of the maximum output frequency (E1-04).	0.0 to 1000.0	100.0%	Yes	A	A	A	A	A	411H
H3-03	Terminal A1 Bias Setting Terminal A1 Bias	Sets the output level when 0V is input, as a percentage of the maximum output frequency (E1-04).	-100.0 to +100.0	0.0%	Yes	A	A	A	A	A	412H
H3-04	Terminal A3 Signal Level Selection Term A3 Signal	Sets the signal level of terminal A3. 0: 0 to 10Vdc 1: -10 to +10Vdc	0 to 1	0	No	A	A	A	A	A	413H
H3-05	Terminal A3 Function Selection Terminal A3 Sel	[Refer to table "H3-05, H3-09 Settings" for multi-function selections]	0 to 1F	2	No	A	A	A	A	A	414H

Parameter Number	Name: Display	Description	Setting Range	Factory Setting	Change during Operation	Control Methods: V/f	V/f with PG	Open Loop Vector 1	Flux Vector	Open Loop Vector 2	MODBUS Register
H3-06	Terminal A3 Gain Setting Terminal A3 Gain	Sets the output level when 10V is input.	0.0 to 1000.0	100.0%	Yes	A	A	A	A	A	415H
H3-07	Terminal A3 Bias Setting Terminal A3 Bias	Sets the frequency reference when 0V is input.	-100.0 to +100.0	0.0%	Yes	A	A	A	A	A	416H
H3-08	Terminal A2 Signal Level Selection Term A2 Signal	Selects the signal level of terminal A2. 0: 0 to 10Vdc (switch S1-2 must be in the OFF position). 1: -10 to +10Vdc (switch S1-2 must be in the OFF position). 2: 4 to 20mA (switch S1-2 must be in the ON position) Note:Switch between current or voltage inputs by using (S1-2) switch on the terminal board.	0 to 2	2	No	A	A	A	A	A	417H
H3-09	Terminal A2 Function Selection Terminal A2 Sel	Selects the function of terminal A2. Same choices as Terminal A3 Function Selection (H3-05).	0 to 1F	0	No	A	A	A	A	A	418H
H3-10	Terminal A2 Gain Setting Terminal A2 Gain	Sets the output level when 10V is input.	0.0 to 1000.0	100.0%	Yes	A	A	A	A	A	419H
H3-11	Terminal A2 Bias Setting Terminal A2 Bias	Sets the output level when 0V is input.	-100.0 to +100.0	0.0%	Yes	A	A	A	A	A	41AH
H3-12	Analog Input Filter Time Constant Filter Avg Time	This parameter adjusts the filter on all 3 analog inputs. Increase to add stability, decrease to improve response.	0.00 to 2.00	0.03sec	No	A	A	A	A	A	41BH

H3-05,H3-09 Settings

Setting Value	Function	Contents (100%)	Control Methods				
			V/f	V/f with PG	Open Loop Vector 1	Flux Vector	Open Loop Vector 2
0	Frequency Bias	100% = Maximum output frequency (E1-04)	Yes	Yes	Yes	Yes	Yes
1	Frequency Reference Gain (FGAIN)	100% = Frequency reference command value A1 Total gain = Internal gain (H3-02) x FGAIN	Yes	Yes	Yes	Yes	Yes
2	Aux Frequency Reference 1	Used in conjunction with multi-function inputs "multi-step frequency reference 1-4" (d1-16). 100% = Maximum output frequency (E1-04)	Yes	Yes	Yes	Yes	Yes
3	Aux Frequency Reference 2	Used in conjunction with multi-function inputs "multi-step frequency reference 1-4" (d1-16). 100% = Maximum output frequency (E1-04)	Yes	Yes	Yes	Yes	Yes
4	Output Voltage Bias	100% = Motor rated voltage (E1-05). Voltage boost after V/F pattern	Yes	Yes	No	No	No
5	Accel / Decel Time Coefficient	100% = Active accel / decel time (C1-01 thru C1-08)	Yes	Yes	Yes	Yes	Yes
6	DC Injection Braking Current	100% = Drive rated current. Parameter b2-02 is disabled.	Yes	Yes	Yes	No	No
7	Overtorque / Undertorque Detection Level	Used for multi-function digital output for "overtorque/undertorque". 100% = motor rated torque (OLV, FV) or Drive rated current (V/F, V/F w/PG). Internal overtorque detection level (C6-02) disabled.	Yes	Yes	Yes	Yes	Yes
8	Stall Prevention Level During Run	100% = L3-06.	Yes	Yes	No	No	No
9	Frequency Reference Lower Limit	100% = Maximum output frequency (E1-04). Either the setting in d2-02 or the A3 input level is enabled, whichever is larger.	Yes	Yes	Yes	Yes	Yes
A	Jump Frequency	100% = Maximum output frequency (E1-04).	Yes	Yes	Yes	Yes	Yes
B	PID Feedback	100% = Maximum output frequency (E1-04).	Yes	Yes	Yes	Yes	Yes
C	PID Set Point	100% = Maximum output frequency (E1-04). Frequency reference no longer acts as a PID setpoint.	Yes	Yes	Yes	Yes	Yes
D	Frequency Reference Bias 2	100% = Maximum output frequency (E1-04). Total bias = Internal bias (H3-03) + FBIAS (H3-07) + A3 input level	Yes	Yes	Yes	Yes	Yes
E	Motor Temperature Input	10V = 100% See parameters L1-03 and L1-04	Yes	Yes	Yes	Yes	Yes
10	FWD Torque Limit (Quadrant 1)	100% = Motor rated torque.	No	No	Yes	Yes	Yes
11	REV Torque Limit (Quadrant 3)	100% = Motor rated torque.	No	No	Yes	Yes	Yes
12	Regenerative Torque Limit (Quadrants 2 and 4)	100% = Motor rated torque.	No	No	Yes	Yes	Yes
13	Torque Reference (in Torque Control); Torque Limit (in Speed Control)	100% = Motor rated torque.	No	No	No	Yes	Yes
14	Torque Compensation	100% = Motor rated torque.	No	No	No	Yes	Yes
15	FWD / REV Torque Limit	100% = Motor rated torque.	No	No	Yes	Yes	Yes
1F	Analog input not used.	-	Yes	Yes	Yes	Yes	Yes
16 to 1E	Not used	-	-	-	-	-	-

■Multi-function Analog Outputs: H4

User parameters for multi-function analog outputs are shown in the following table.

Parameter Number	Name: Display	Description	Setting Range	Factory Setting	Change during Operation	Control Methods: V/f	V/f with PG	Open Loop Vector 1	Flux Vector	Open Loop Vector 2	MODBUS Register
H4-01	Terminal FM Monitor Selection / Terminal FM Sel	Selects the monitor output (U1-xx) function for terminals FM and FC. Refer to "U1-xx" monitors for available settings. Unavailable settings: 4, 10, 11, 12, 13, 14, 25, 28, 29, 30, 31, 34, 35, 39, 40, 41, 42, 47, 49, 50	1 to 48	2	No	A	A	A	A	A	41DH
H4-02	Terminal FM Gain Setting / Terminal FM Gain	Sets terminal FM output level when selected monitor is at 100%.*	0.00 to 2.50	1.00	Yes	Q	Q	Q	Q	Q	41EH
H4-03	Terminal FM Bias Setting / Terminal FM Bias	Sets terminal FM output level when selected monitor is at 0%.*	-10.0 to 10.0	0.0%	Yes	A	A	A	A	A	41FH
H4-04	Terminal AM Monitor Selection / Terminal AM Sel	Selects which monitor will be the output on terminals AM and FC. Same function choices as H4-01.	1 to 48	3	No	A	A	A	A	A	420H
H4-05	Terminal AM Gain Setting / Terminal AM Gain	Sets terminal AM output voltage (in percent of 10Vdc) when selected monitor is at 100% output.*	0.00 to 2.50	0.50	Yes	Q	Q	Q	Q	Q	421H
H4-06	Terminal AM Bias Setting / Terminal AM Bias	Sets terminal AM output voltage (in percent of 10Vdc) when selected monitor is at 0% output.*	-10.0 to 10.0	0.0%	Yes	A	A	A	A	A	422H
H4-07	Terminal FM Signal Level Selection / AO Level Select1	Selects the signal level of terminal FM. 0: 0 to 10Vdc 1: -10 to +10Vdc 2: 4 to 20mA* *Set the analog output jumper CN15 in the proper position.	0 to 2	0	No	A	A	A	A	A	423H
H4-08	Terminal AM Signal Level Selection / AO Level Select 2	Selects the signal level of terminal AM. 0: 0 to 10Vdc 1: -10 to +10Vdc 2: 4 to 20mA* *Set the analog output jumper CN15 in the proper position.	0 to 2	0	No	A	A	A	A	A	424H

* In order to adjust the meter, 100% of the appropriate output is multiplied for the gain setting, the bias amount is added and then output.
See H4-02 when stopped in Quick, Advanced, or Verify mode. If 03 appears on the setting screen, then terminal FM is used.
See H4-04 when stopped in Quick, Advanced, or Verify mode. If 06 appears on the setting screen, then terminal AM is used.

■MODBUS Communications: H5

User parameters for MODBUS communications are shown in the following table.

Parameter Number	Name: Display	Description	Setting Range	Factory Setting	Change during Operation	Control Methods: V/f	V/f with PG	Open Loop Vector 1	Flux Vector	Open Loop Vector 2	MODBUS Register
H5-01	Drive Node Address Serial Comm Adr	Selects Drive station node number (address) for Modbus terminals R+, R-, S+, S-. The Drive's power must be cycled for the setting to take effect.	0 to 20 *	1F	No	A	A	A	A	A	425H
H5-02	Communication Speed Selection Serial Baud Rate	Selects the baud rate for Modbus terminals R+, R-, S+ and S-. The Drive's power must be cycled for the setting to take effect. 0: 1200 bps 1: 2400 bps 2: 4800 bps 3: 9600 bps 4: 19200 bps	0 to 4	3	No	A	A	A	A	A	426H
H5-03	Communication Parity Selection Serial Com Sel	Selects the communication parity for Modbus terminals R+, R-, S+ and S-. The Drive's power must be cycled for the setting to take effect. 0: No Parity 1: Even Parity 2: Odd Parity	0 to 2	0	No	A	A	A	A	A	427H
H5-04	Stopping Method After Communication Error Serial Fault Sel	Selects the stopping method when a communication timeout fault (CE) is detected. 0: Ramp to Stop 1: Coast to Stop 2: Fast-Stop 3: Alarm Only	0 to 3	3	No	A	A	A	A	A	428H
H5-05	Communication Fault Detection Selection Serial Flt Dtct	Enables or disables the communications timeout fault (CE). 0: Disabled - A communication loss will not cause a communication fault. 1: Enabled - If communication is lost for more than 2 seconds, a CE fault will occur.	0 to 1	1	No	A	A	A	A	A	429H
H5-06	Drive Transmit Wait Time Transmit WaitTIM	Set the delay time from when the Drive receives data to when the Drive sends data.	5 to 65	5ms	No	A	A	A	A	A	42AH
H5-07	RTS Control Selection RTS Control Sel	Enables or disables "request to send" (RTS) control: 0: Disabled - RTS is always on 1: Enabled - RTS turns on only when sending	0 to 1	1	No	A	A	A	A	A	42BH

* If H5-01 is set to zero, then the drive will be unable to respond to Modbus communication.

■Pulse Train I/O: H6

User parameters for pulse I/O are shown in the following table.

Parameter Number	Name: Display	Description	Setting Range	Factory Setting	Change during Operation	Control Methods: V/f	V/f with PG	Open Loop Vector 1	Flux Vector	Open Loop Vector 2	MODBUS Register
H6-01	Terminal RP Pulse Train Input Function Selection Pulse Input Sel	Selects the function of pulse train terminal RP. 0: Frequency reference 1: PID feedback value 2: PID setpoint value	0 to 2	0	No	A	A	A	A	A	42CH
H6-02	Pulse Train Input Scaling Pulse In Scaling	Sets the number of pulses (in Hz) that is equal to the maximum output frequency E1-04.	1000 to 32000	1440Hz	Yes	A	A	A	A	A	42DH
H6-03	Pulse Train Input Gain Pulse Input Gain	Sets the output level when the pulse train input is at 100% as a percentage of maximum output frequency E1-04.	0.0 to 1000.0	100.0%	Yes	A	A	A	A	A	42EH
H6-04	Pulse Train Input Bias Pulse Input Bias	Sets the output level when the pulse train input is 0Hz as a percentage of maximum output frequency E1-04.	-100.0 to 100.0	0.0%	Yes	A	A	A	A	A	42FH
H6-05	Pulse Train Input Filter Time Pulse In Filter	Sets the pulse train input filter time constant in seconds.	0.00 to 2.00	0.10sec	Yes	A	A	A	A	A	430H
H6-06	Terminal MP Pulse Train Monitor Selection Pulse Moni Sel	Select the pulse train monitor output terminal MP function (value of the xx part of U1-xx). See Table A2 for the list of U1 monitors.	1, 2, 5, 20, 24, 36	2	Yes	A	A	A	A	A	431H
H6-07	Pulse Train Monitor Scaling Pulse Moni Scale	Sets the number of output pulses when the monitor is 100% (in Hz). Set H6-06 to 2, and H6-07 to 0, to make the pulse train monitor output synchronous to the output frequency.	0 to 32000	1440Hz	Yes	A	A	A	A	A	432H

◆ Protection Function Parameters: L

The following settings are made with the protection function parameters (L parameters): Motor selection function, power loss ridethrough function, stall prevention function, frequency detection, torque limits, and hardware protection.

■Motor Overload: L1

User parameters for motor overloads are shown in the following table.

Parameter Number	Name: Display	Description	Setting Range	Factory Setting	Change during Operation	Control Methods: V/f	V/f with PG	Open Loop Vector 1	Flux Vector	Open Loop Vector 2	MODBUS Register
L1-01	Motor Overload Protection Selection MOL Fault Select	Sets the motor thermal overload protection (OL1) based on the cooling capacity of the motor. 0: Disabled 1: Standard Fan Cooled (< 10:1 motor) 2: Standard Blower Cooled (≥10:1 motor) 3: Vector Motor (≤1000:1 motor)	0 to 3	1	No	Q	Q	Q	Q	Q	480H
L1-02	Motor Overload Protection Time MOL Time Const	Sets the motor thermal overload protection (OL1) time. A larger L1-02 time will increase the time before an OL1 fault will occur.	0.1 to 5.0	1.0 min	No	A	A	A	A	A	481H
L1-03	Motor Overheat Alarm Operation Selection Mtr OH Alarm Sel	Sets operation selection when the motor temperature analog input (H3-09 = E) exceeds the OH3 alarm level (1.17V) 0: Ramp to Stop 1: Coast to Stop 2: Fast-Stop 3: Alarm Only	0 to 3	3	No	A	A	A	A	A	482H
L1-04	Motor Overheat Fault Operation Selection Mtr OH Fault Sel	Sets stopping method when the motor temperature analog input (H3-09 = E) exceeds the OH4 fault level (2.34V). 0: Ramp to Stop 1: Coast to Stop 2: Fast-Stop	0 to 2	1	No	A	A	A	A	A	483H
L1-05	Motor Temperature Input Filter Time Mtr Temp Filter	This parameter adjusts the filter on the motor temperature analog input (H3-09 = E). Increase to add stability, decrease to improve response.	0.00 to 10.00	0.20sec	No	A	A	A	A	A	484H

■Power Loss Ridethrough: L2

User parameters for power loss ridethroughs are shown in the following table.

Parameter Number	Name: Display	Description	Setting Range	Factory Setting	Change during Operation	Control Methods: V/f	V/f with PG	Open Loop Vector 1	Flux Vector	Open Loop Vector 2	MODBUS Register
L2-01	Momentary Power Loss Detection Selection PwrL Selection	Enables and disables the momentary power loss function. 0: Disabled - Drive trips on (UV1) fault when power is lost. 1: Power Loss Ride Thru Time - Drive will restart if power returns within the time set in L2-02.* 2: CPU Power Active - Drive will restart if power returns prior to control power supply shut down.* * In order for a restart to occur, the run command must be maintained throughout the ride thru period.	0 to 2	0	No	A	A	A	A	A	485H
L2-02	Momentary Power Loss Ride-thru Time PwrL Ridethru t	Sets the power loss ride-thru time. This value is dependent on the capacity of the Drive. Only effective when L2-01 = 1.	0 to 25.5	0.1sec *1	No	A	A	A	A	A	486H
L2-03	Momentary Power Loss Minimum Base Block Time PwrL Baseblock t	Sets the minimum time to wait to allow the residual motor voltage to decay before the Drive output turns back on during power loss ride thru. After a power loss, if L2-03 is greater than L2-02, operation resumes after the time set in L2-03.	0.1 to 5.0	0.2sec *1	No	A	A	A	A	A	487H
L2-04	Momentary Power Loss Voltage Recovery Ramp Time PwrL V/F Ramp t	Sets the time it takes the output voltage to return to the preset V/f pattern after speed search (current detection mode) is complete.	0.0 to 5.0	0.3sec *1	No	A	A	A	A	A	488H
L2-05	Undervoltage Detection Level PUV Det Level	Sets the Drive's DC Bus undervoltage trip level. If this is set lower than the factory setting, additional AC input reactance or DC bus reactance may be necessary. Consult the factory before changing this parameter setting.	150 to 210 *2	190 V *2	No	A	A	A	A	A	489H

Parameter Number	Name: Display	Description	Setting Range	Factory Setting	Change during Operation	Control Methods: V/f	V/f with PG	Open Loop Vector 1	Flux Vector	Open Loop Vector 2	MODBUS Register
L2-06	KEB Deceleration Rate KEB Decel Time	Sets the time required to decelerate to zero speed when a KEB command is input from a multi-function input.	0.0 to 200.0	0.0sec	No	A	A	A	A	A	48AH
L2-07	Momentary Recovery Time UV Return Time	Set the time (in seconds) to accelerate to the set speed after recovery from a momentary power loss. If setting = 0.0, then active acceleration time is used instead.	0.0 to 25.5	0.0sec *3	No	A	A	A	A	A	48BH
L2-08	Frequency Reduction Gain at KEB Start KEB Frequency	Sets the percentage of output frequency reduction at the beginning of deceleration when a KEB command is input from multi-function input. Reduction = (SlipFreqBeforeKEB) x L2-08 x 2	0 to 300	100%	No	A	A	A	A	A	48CH

* 1. Factory settings will vary based on drive capacity (values given here are for 208-240Vac, 0.4kW).
* 2. Setting value for 208-240Vac. Double the value when working with 380-480Vac drives.
* 3. When set to zero, the motor will accelerate to the speed set acceleration time (C1-01 thru C1-08).

■Stall Prevention: L3

User parameters for the stall prevention function are shown in the following table.

Parameter Number	Name: Display	Description	Setting Range	Factory Setting	Change during Operation	Control Methods: V/f	V/f with PG	Open Loop Vector 1	Flux Vector	Open Loop Vector 2	MODBUS Register
L3-01	Stall Prevention Selection During Accel StallP Accel Sel	Selects the stall prevention method used to prevent excessive current during acceleration. 0: Disabled - Motor accelerates at active acceleration rate. The motor may stall if load is too heavy or accel time is too short. 1: General Purpose - When output current exceeds L3-02 level, acceleration stops. Acceleration will continue when the output current level falls below the L3-02 level. 2: Intelligent - The active acceleration rate is ignored. Acceleration is completed in the shortest amount of time without exceeding the current value set in L3-02.	0 to 2	1	No	A	A	A	No	No	48FH

Parameter Number	Name: Display	Description	Setting Range	Factory Setting	Change during Operation	Control Methods: V/f	V/f with PG	Open Loop Vector 1	Flux Vector	Open Loop Vector 2	MODBUS Register
L3-02	Stall Prevention Level During Acceleration StallP Accel Lvl	This function is enabled when L3-01 is "1" or "2". Drive rated current is 100%. Decrease the set value if stalling or excessive current occurs with factory setting.	0 to 200	150%	No	A	A	A	No	No	490H
L3-03	Stall Prevention Limit During Acceleration StallP CHP Lvl	Sets the lower limit for stall prevention during acceleration, as a percentage of the Drive's rated current, when operation is in the frequency range above E1-06 (constant power region).	0 to 100	50%	No	A	A	A	No	No	491H
L3-04	Stall Prevention Selection During Deceleration StallP Decel Sel	When using a braking resistor, use setting "0". Setting "3" is used in specific applications. 0: Disabled - The Drive decelerates at the active deceleration rate. If the load is too large or the deceleration time is too short, an OV fault may occur. 1: General Purpose - The Drive decelerates at the active deceleration rate, but if the main circuit DC bus voltage reaches the stall prevention level (380/760Vdc), deceleration will stop. Deceleration will continue once the DC bus level drops below the stall prevention level. 2: Intelligent - The active deceleration rate is ignored and the Drive decelerates as fast as possible w/o hitting OV fault level. Range: C1-02 / 10. 3: Stall Prevention w/ Braking Resistor - Stall prevention during deceleration is enabled in coordination with dynamic braking.	0 to 3*	1	No	Q	Q	Q	Q	Q	492H

Parameter Number	Name: Display	Description	Setting Range	Factory Setting	Change during Operation	Control Methods: V/f	V/f with PG	Open Loop Vector 1	Flux Vector	Open Loop Vector 2	MODBUS Register
L3-05	Stall Prevention Selection During Running StallP Run Sel	Selects the stall prevention method to use to prevent Drive faults during run. 0: Disabled - Drive runs a set frequency. A heavy load may cause the Drive to trip on an OC or OL fault. 1: Decel Time 1 - In order to avoid stalling during heavy loading, the Drive will decelerate at Decel time 1 (C1-02) if the output current exceeds the level set by L3-06. Once the current level drops below the L3-06 level, the Drive will accelerate back to its frequency reference at the active acceleration rate. 2: Decel Time 2 - Same as setting 1 except the Drive decelerates at Decel Time 2 (C1-04). When output frequency is 6Hz or less, stall prevention during run is disabled regardless of the setting in L3-05.	0 to 2	1	No	A	A	No	No	No	493H
L3-06	Stall Prevention Level During Running StallP Run Level	This parameter is enabled when L3-05 is set to "1" or "2". Drive rated current is set as 100%. Decrease the set value if stalling or excessive current occurs with the factory settings.	30 to 200	160%	No	A	A	No	No	No	494H
L3-11	OV Suppression Function Selection OV Inhibit Sel	Enables or disables OV suppression function, which allows the Drive to change the output frequency as the load changes, to prevent an OV fault. 0: Disabled 1: Enabled	0 to 1	0	No	No	No	A	A	A	4C7H
L3-12	OV Suppression Function Voltage Level OV Inhbt VoltLvl	Sets the DC bus voltage level at which the OV suppression function is active. Normally, this setting does not require adjustment. Decrease the value if overvoltage occurs even when OV suppression is enabled.	350 to 390 *1	380V *1	No	No	No	A	A	A	4C8H

* In Flux Vector or in Open Loop Vector 2, the setting range becomes 0 to 2.

* *1 Values shown here are for 208-240V drives. Double the value when working with 380-480V drives.

■Reference Detection: L4

User parameters for the reference detection function are shown in the following table.

Parameter Number	Name: Display	Description	Setting Range	Factory Setting	Change during Operation	Control Methods: V/f	V/f with PG	Open Loop Vector 1	Flux Vector	Open Loop Vector 2	MODBUS Register
L4-01	Speed Agreement Detection Level Spd Agree Level	These parameters configure the multi-function output (H2-oo) settings "Fref/Fout Agree 1", "Fref/Set Agree 1", "Frequency Detection 1," and "Frequency detection 2". Parameter L4-01 sets the level while parameter L4-02 sets the hysteresis for the Speed Detection Output Function.	0.0 to 400.0	0.0Hz	No	A	A	A	A	A	499H
L4-02	Speed Agreement Detection Width Spd Agree Width	These parameters configure the multi-function output (H2-oo) settings "Fref/Fout Agree 1", "Fref/Set Agree 1", "Frequency Detection 1," and "Frequency detection 2". Parameter L4-01 sets the level while parameter L4-02 sets the hysteresis for the Speed Detection Output Function.	0.0 to 20.0	2.0Hz	No	A	A	A	A	A	49AH
L4-03	Speed Agreement Detection Level (+/-) Spd Agree Lvl+-	These parameters configure the Multi-Function Output (H2-oo) settings "Fref/Fout Agree 2", "Fref/Set Agree 2", "Frequency Detection 3," or "Frequency Detection 4". Parameter L4-03 sets the level while parameter L4-04 sets the hysteresis for the Speed Detection Output Function.	-400.0 to +400.0	0.0Hz	No	A	A	A	A	A	49BH
L4-04	Speed Agreement Detection Width (+/-) Spd Agree Wdth+-	These parameters configure the Multi-Function Output (H2-oo) settings "Fref/Fout Agree 2", "Fref/Set Agree 2", "Frequency Detection 3," or "Frequency Detection 4". Parameter L4-03 sets the level while parameter L4-04 sets the hysteresis for the Speed Detection Output Function.	0.0 to 20.0	2.0Hz	No	A	A	A	A	A	49CH
L4-05	Frequency Reference Loss Detection Selection Ref Loss Sel	Determines how the Drive will react when the frequency reference is lost. The frequency reference is considered lost when reference drops 90% or more of its current value for 400ms. 0: Stop - Drive will stop. 1: Run at L4-06 PrevRef - Drive will run at the percentage set in L4-06 of the frequency reference level at the time frequency reference was lost.	0 to 1	0	No	A	A	A	A	A	49DH

Parameter Number	Name: Display	Description	Setting Range	Factory Setting	Change during Operation	Control Methods: V/f	V/f with PG	Open Loop Vector 1	Flux Vector	Open Loop Vector 2	MODBUS Register
L4-06	Frequency Reference at Reference Loss Fref at Floss	If the frequency reference loss function is enabled (L4-05=1) and frequency reference is lost, the Drive will run at a reduced frequency reference determined by the following formula: Fref = Fref at time of loss * L4-06.	0.0 to 100.0%	80%	No	A	A	A	A	A	4C2H
L4-07	Torque Limit Control Method During Accel/ Decel Torque Limit Sel	Selects the control method for the torque limit during acceleration and deceleration. 0: Proportional Control (integral control at fixed speeds) 1: Normal integral control, no need to change settings.	0 to 1	0	No	No	No	A	No	No	4C9H

■Fault Restart: L5

User parameters for restarting faults are shown in the following table.

Parameter Number	Name: Display	Description	Setting Range	Factory Setting	Change during Operation	Control Methods: V/f	V/f with PG	Open Loop Vector 1	Flux Vector	Open Loop Vector 2	MODBUS Register
L5-01	Number of Auto Restart Attempts Num of Restarts	Sets the counter for the number of times the Drive will perform an automatic restart on the following faults: GF, LF, OC, OV, PF, PUF, RH, RR, OL1, OL2, OL3, OL4, UV1. Auto restart will check to see if the fault has cleared every 5ms. When no fault is present, the Drive will attempt an auto restart. If the Drive faults after an auto restart attempt, the counter is incremented. When the Drive operates without fault for 10 minutes, the counter will reset to the value set in L5-01.	0 to 10	0	No	A	A	A	A	A	49EH
L5-02	Auto Restart Operation Selection Restart Sel	Determines if the fault contact activates during an automatic restart attempt. 0: No Fault Relay - fault contact will not activate during an automatic restart attempt. 1: Fault Relay Active - fault contact will activate during an automatic restart attempt.	0 to 1	0	No	A	A	A	A	A	49FH

■Torque Detection: L6

User parameters for the torque detection function are shown in the following table.

Parameter Number	Name: Display	Description	Setting Range	Factory Setting	Change during Operation	Control Methods: V/f	V/f with PG	Open Loop Vector 1	Flux Vector	Open Loop Vector 2	MODBUS Register
L6-01	Torque Detection Selection 1 Torq Det 1 Sel	Determines the Drive's response to an Overtorque/ Undertorque condition. Overtorque and Undertorque are determined by the settings in parameters L6-02 and L6-03. The multi-function output settings "B" and "17" in the H2-oo parameter group are also active if programmed. 0: Disabled 1: OL3 at Speed Agree - Alarm (Overtorque Detection only active during Speed Agree and Operation continues after detection). 2: OL3 at RUN - Alarm (Overtorque Detection is always active and operation continues after detection). 3: OL3 at Speed Agree - Fault (Overtorque Detection only active during Speed Agree and Drive output will shut down on an OL3 fault). 4: OL3 at RUN - Fault (Overtorque Detection is always active and Drive output will shut down on an OL3 fault). 5: UL3 at Speed Agree - Alarm (Undertorque Detection is only active during Speed Agree and operation continues after detection). 6: UL3 at RUN - Alarm (Undertorque Detection is always active and operation continues after detection). 7: UL3 at Speed Agree - Fault (Undertorque Detection only active during Speed Agree and Drive output will shut down on an OL3 fault). 8: UL3 at RUN - Fault (Undertorque Detection is always active and Drive output will shut down on an OL3 fault).	0 to 8	0	No	A	A	A	A	A	4A1H

Parameter Number	Name	Description	Setting Range	Factory Setting	Change during Operation	Control Methods					MODBUS Register
	Display					V/f	V/f with PG	Open Loop Vector 1	Flux Vector	Open Loop Vector 2	
L6-02	Torque Detection Level 1 Torq Det 1 Lvl	Sets the Overtorque/ Undertorque detection level as a percentage of Drive rated current or torque for Torque Detection 1. Current detection for A1-02 = 0 or 1. Torque detection for A1-02 = 2 or 3.	0 to 300	150%	No	A	A	A	A	A	4A2H
L6-03	Torque detection time 1 Torq Det 1 Time	Sets the length of time an Overtorque/Undertorque condition must exist before Torque Detection 1 is recognized by the Drive.	0.0 to 10.0	0.1sec	No	A	A	A	A	A	4A3H

Parameter Number	Name: Display	Description	Setting Range	Factory Setting	Change during Operation	Control Methods: V/f	V/f with PG	Open Loop Vector 1	Flux Vector	Open Loop Vector 2	MODBUS Register
L6-04	Torque Detection Selection 2 Torq Det 2 Sel	Determines the Drive's response to an Overtorque/ Undertorque condition. Overtorque and Undertorque are determined by the settings in parameters L6-05 and L6-06. The multi-function output settings "18" and "19" in the H2-oo parameter group are also active if programmed. 0: Disabled 1: OL4 at Speed Agree - Alarm (Overtorque Detection only active during Speed Agree and Operation continues after detection). 2: OL4 at RUN - Alarm (Overtorque Detection is always active and operation continues after detection). 3: OL4 at Speed Agree - Fault (Overtorque Detection only active during Speed Agree and Drive output will shut down on an OL4 fault). 4: OL4 at RUN - Fault (Overtorque Detection is always active and Drive output will shut down on an OL4 fault). 5: UL4 at Speed Agree - Alarm (Undertorque Detection is only active during Speed Agree and operation continues after detection). 6: UL4 at RUN - Alarm (Undertorque Detection is always active and operation continues after detection). 7: UL4 at Speed Agree - Fault (Undertorque Detection only active during Speed Agree and Drive output will shut down on an OL4 fault). 8: UL4 at RUN - Fault (Undertorque Detection is always active and Drive output will shut down on an OL4 fault).	0 to 8	0	No	A	A	A	A	A	4A4H
L6-05	Torque Detection Level 2 Torq Det 2 Lvl	Sets the Overtorque/ Undertorque detection level as a percentage of Drive rated current or torque for Torque Detection 2. Current detection for A1-02 = 0 or 1. Torque detection for A1-02 = 2 or 3.	0 to 300	150%	No	A	A	A	A	A	4A5H
L6-06	Torque Detection Time 2 Torq Det 2 Time	Sets the length of time an Overtorque/Undertorque condition must exist before torque detection 2 is recognized by the Drive.	0.0 to 10.0	0.1sec	No	A	A	A	A	A	4A6H

■Torque Limits: L7

User parameters for torque limits are shown in the following table.

Parameter Number	Name	Description	Setting Range	Factory Setting	Change during Operation	Control Methods					MODBUS Register
						V/f	V/f with PG	Open Loop Vector 1	Flux Vector	Open Loop Vector 2	
L7-01	Forward Torque Limit Torq Limit Fwd	Sets the torque limit value as a percentage of the motor rated torque. Four individual quadrants can be set. 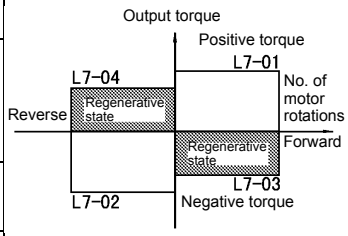 	0 to 300	200%	No	No	No	A	A	A	4A7H
L7-02	Reverse Torque Limit Torq Limit Rev		0 to 300	200%	No	No	No	A	A	A	4A8H
L7-03	Forward Regenerative Torque Limit Torq Lmt Fwd Rgn		0 to 300	200%	No	No	No	A	A	A	4A9H
L7-04	Reverse Regenerative Torque Limit Torq Lmt Rev Rgn		0 to 300	200%	No	No	No	A	A	A	4AAH
L7-06	Torque Limit Integral Time Constant Torq Det 2 Time	Sets the torque limit value as a percentage of the motor rated torque. Four individual quadrants can be set.	5 to 10000	200ms	No	No	No	A	No	No	4ACH
L7-07	Torque Limit Control Method Selection During Accel/Decel Torq Lmt Sel	Selects the method of torque limit controls during accel/decel 0: Proportional Controls (uses integral controls at fixed speeds). 1: Integral Controls Adjustment is not normally required. With applications that require torque limits during accel/decel, integral controls (setting value = 1) are used when torque controls take precedence. When torque limit is applied to the motor, accel/decel time may increase and motor speed may not run at the indicated speed reference.	0 to 1	0	No	No	No	A	No	No	4C9H

■Hardware Protection: L8

User parameters for hardware protection functions are shown in the following table.

Parameter Number	Name: Display	Description	Setting Range	Factory Setting	Change during Operation	Control Methods: V/f	V/f with PG	Open Loop Vector 1	Flux Vector	Open Loop Vector 2	MODBUS Register
L8-01	Internal Dynamic Braking Resistor Protection Selection DB Resistor Prot	Selects the DB protection only when using 3% duty cycle heatsink mount Yaskawa braking resistor. This parameter does not enable or disable the DB function of the Drive. 0: Not Provided 1: Provided	0 to 1	0	No	A	A	A	A	A	4ADH
L8-02	Overheat Alarm Level OH Pre-Alarm Lvl	When the cooling fin temperature exceeds the value set in this parameter, an Overheat Alarm (OH) will occur.	50 to 130	95 °C*	No	A	A	A	A	A	4AEH
L8-03	Overheat Pre-Alarm Operation Selection OH Pre-Alarm Sel	Selects the Drive operation upon an OH pre-alarm detection. 0: Ramp to Stop 1: Coast to Stop 2: Fast-Stop 3: Alarm Only	0 to 3	3	No	A	A	A	A	A	4AFH
L8-05	Input Phase Loss Protection Selection Ph Loss In Sel	Selects the detection of input current phase loss, power supply voltage imbalance, or main circuit electrostatic capacitor deterioration. 0: Disabled 1: Enabled	0 to 1	0	No	A	A	A	A	A	4B1H
L8-07	Output Phase Loss Protection Ph Loss Out Sel	Selects the detection method for output phase loss. When applied motor capacity is too small for Drive capacity, output phase loss may be detected inadvertently. In this case, set to 0. 0: Disabled 1: Single Phase Loss Detection 2: 2/3-phase Loss Detection	0 to 2	0	No	A	A	A	A	A	4B3H
L8-09	Output Ground Fault Detection Selection Ground Fault Sel	Enables and disables the Drive's output ground fault detection. 0: Disabled 1: Enabled	0 to 1	1	No	A	A	A	A	A	4B5H

Parameter Number	Name: Display	Description	Setting Range	Factory Setting	Change during Operation	Control Methods: V/f	V/f with PG	Open Loop Vector 1	Flux Vector	Open Loop Vector 2	MODBUS Register
L8-10	Heatsink Cooling Fan Operation Selection / Fan On/Off Sel	Controls the heatsink cooling fan operation. 0: Fan On-Run Mode - Fan will operate only when the Drive is running and for L8-11 seconds after RUN is removed. 1: Fan always on - Cooling fan operates whenever the Drive is powered up.	0 to 1	0	No	A	A	A	A	A	4B6H
L8-11	Heatsink Cooling Fan Operation Delay Time / Fan Delay Time	This parameter sets the delay time for the cooling fan turn off after the run command is removed when L8-10 = 0.	0 to 300	60sec	No	A	A	A	A	A	4B7H
L8-12	Ambient Temperature Setting / Ambient Temp	When the Drive is installed in an ambient temperature exceeding its rating, the Drive overload (OL2) protection level is adjusted.	45 to 60	45 °C	No	A	A	A	A	A	4B8H
L8-15	OL2 Characteristic Selection at Low Speeds / OL2 Sel @ L-Spd	This parameter assists in protecting the output transistors from overheating when output current is high and output frequency is low (6Hz and less). 0: Disabled - L8-16 and L8-17 are disabled. 1: Enabled - L8-16 and L8-17 are active.	0 to 1	1	No	A	A	A	A	A	4BBH
L8-18	Soft CLA Selection / Soft CLA Sel	Enables and disables the software current limit function. Consult the factory before disabling. 0: Disabled 1: Enabled	0 to 1	1	No	A	A	A	A	A	4BFH

* Factory settings will vary based on drive capacity.

◆ n: Special Adjustments

The following settings are made with the special adjustments parameters (n parameters): Hunting prevention and speed feedback detection control.

■Hunting Prevention Function: n1

User parameters for hunting prevention are shown in the following table.

Parameter Number	Name: Display	Description	Setting Range	Factory Setting	Change during Operation	Control Methods: V/f	V/f with PG	Open Loop Vector 1	Flux Vector	Open Loop Vector 2	MODBUS Register
n1-01	Hunting Prevention Selection Hunt Prev Select	If the motor vibrates while lightly loaded, hunting prevention may reduce the vibration. 0: Disabled 1: Enabled	0 to 1	1	No	A	A	No	No	No	580H
n1-02	Hunting Prevention Gain Setting Hunt Prev Gain	Sets the gain for the Hunting Prevention Function. - If the motor vibrates while lightly loaded and n1-01=1, increase the gain by 0.1 until vibration ceases. - If the motor stalls while n1-01=1, decrease the gain by 0.1 until the stalling ceases.	0.00 to 2.50	1.00	No	A	A	No	No	No	581H

■Speed Feedback Protection Control Functions: n2

User parameters for speed feedback protection control functions are shown in the following table.

Parameter Number	Name: Display	Description	Setting Range	Factory Setting	Change during Operation	Control Methods: V/f	V/f with PG	Open Loop Vector 1	Flux Vector	Open Loop Vector 2	MODBUS Register
n2-01	Speed Feedback Detection Control (AFR) Gain AFR Gain	Sets the internal speed feedback detection control gain in the automatic frequency regulator (AFR). Normally, there is no need to change this setting. Adjust this parameter as follows: - If hunting occurs, increase the set value. - If response is low, decrease the set value. Adjust the setting by 0.05 units at a time, while checking the response.	0.00 to 10.00	1.00	No	No	No	A	No	No	584H
n2-02	Speed Feedback Detection Control (AFR) Time Constant AFR Time	Sets the time constant to control the rate of change in the speed feedback detection control.	0 to 2000	50ms	No	No	No	A	No	No	585H
n2-03	Speed Feedback Detection Control (AFR) Time Constant 2 AFR Time 2	Sets the time constant to control the amount of change in the speed at low speed.	0 to 2000	750ms	No	No	No	A	No	No	586H

■High-slip Braking: n3

User parameters for high-slip braking are shown in the following table.

Parameter Number	Name: Display	Description	Setting Range	Factory Setting	Change during Operation	Control Methods: V/f	V/f with PG	Open Loop Vector 1	Flux Vector	Open Loop Vector 2	MODBUS Register
n3-01	High Slip Braking Deceleration Frequency Width HSB Down Freq	Sets how aggressively the Drive decreases the output frequency as it stops the motor using high slip braking (HSB). If Overvoltage (OV) faults occur during HSB, this parameter may need to be increased.	1 to 20	5%	No	A	A	No	No	No	588H
n3-02	High Slip Braking Current Limit HSB Current	Sets the maximum current to be drawn during an HSB stop. Higher n3-02 settings will shorten motor stopping times but cause increased motor current, and therefore increased motor heating.	100 to 200	150%	No	A	A	No	No	No	589H

Parameter Number	Name: Display	Description	Setting Range	Factory Setting	Change during Operation	Control Methods: V/f	V/f with PG	Open Loop Vector 1	Flux Vector	Open Loop Vector 2	MODBUS Register
n3-03	High Slip Braking Dwell Time at Stop HSB Dwell Time	Sets the amount of time the Drive will dwell at E1-09 (Minimum Frequency) at the end of deceleration. If this time is set too low, the machine inertia can cause the motor to rotate slightly after the HSB stop is complete and the Drive output is shut off.	0.0 to 10.0	1.0sec	No	A	A	No	No	No	58AH
n3-04	High Slip Braking Overload Time HSB OL Time	Sets the time required for an HSB overload fault (OL7) to occur when the Drive output frequency does not change for some reason during an HSB stop. Normally this does not need to be adjusted.	30 to 1200	40sec	No	A	A	No	No	No	58BH

■Speed Estimation: n4

User parameters for speed estimation are shown in the following table.

Parameter Number	Name: Display	Description	Setting Range	Factory Setting	Change during Operation	Control Methods: V/f	V/f with PG	Open Loop Vector 1	Flux Vector	Open Loop Vector 2	MODBUS Register
n4-07	Observer Integral Time SPD EST I Time	Set the integral time of the speed estimator for PI control.	0.000 to 9.999	0.030ms	No	No	No	No	No	A	59AH
n4-08	Observer Proportional Gain SPD EST P GAIN	Set the proportional gain of the speed estimator for PI control.	0 to 1000	15	No	No	No	No	No	A	59BH
n4-10	High-speed Observer Proportional Gain OBS Gain H-SPD	Sets the P-gain on the hi-speed side of the Observer (PI Controls). Operates at the same proportional gain as N4-07 when set to zero.	0.0 to 1000.0	15	No	No	No	No	No	A	59DH
n4-11	Observer Switching Frequency Speed Change F	Sets the switching frequency for the high and low speed Observer.	40 to 70	70Hz	No	No	No	No	No	A	59EH
n4-15	Lo-Speed + Regen Stability Coefficient PH Comp Lim Gain	Use a large setting if load tolerance needs to be increased during low-speed regeneration. If the setting is too high, then torque command monitor and the actual torque system will be weakened.	0.0 to 3.0	0.3	No	No	No	No	No	A	5A2H

Parameter Number	Name: Display	Description	Setting Range	Factory Setting	Change during Operation	Control Methods: V/f	V/f with PG	Open Loop Vector 1	Flux Vector	Open Loop Vector 2	MODBUS Register
n4-17	Torque Adjustment Gain / TRQ adjust gain	Sets the torque adjustment gain for low-speed power.	0.0 to 5.0	1.0	No	No	No	No	No	A	5A4H
n4-18	Gain for Feeder Resistance Adjustment / Feeder R gain	Sets the gain for the feeder resistance in the speed estimator.	0.90 to 1.30	1.00	No	No	No	No	No	A	5A5H
n4-28	Observer Switching Frequency 2 / Speed Change F 2	Sets the frequency at which the Observer switches between high and low speeds during deceleration.	20 to 70 Hz	50Hz	No	No	No	No	No	A	5AFH
n4-29	Torque Adjustment Gain 2 / TRQ adjust gain2	Slowly increase the setting value when load tolerance rises at low speeds. If set too high, the load tolerance will be reduced. Note: Adjustment is not normally required.	0.00 to 0.40	0.10	No	No	No	No	No	A	5B4H
n4-30	Low Speed + Regen Stability Coefficient 2 / LowSpd Rgn Coef2	Set to a larger value to stabilize the motor when running at extremely low speeds and/or regen. When the setting is increased, the motor will accelerate as the regen load increases. When tuning, adjust in units as large as 0.2.	0.00 to 10.00	1.00	No	No	No	No	No	A	5B5H
n4-32	Observer Gain Modulation Frequency / SpdEst Gain Frq1	Set the lower limit of the P-gain modulation frequency on the low-speed side of the Observer (PI Controls) in Hertz.	0.0 to 60.0 Hz	5.0Hz	No	No	No	No	No	A	5B7H
n4-33	Observer Gain Modulation Frequency 2 / SpdEst Gain Frq2	Set the upper limit of the P-gain modulation frequency on the low-speed side of the Observer (PI Controls) in Hertz.	0.0 to 60.0 Hz	20.0Hz	No	No	No	No	No	A	5B8H
n4-34	Observer Gain Modulation Rate / SpdEst Gain Rate	Sets the percentage of modulation allowed for P-gain on the low-speed side of the Observer (PI Controls).	50.0 to 100.0%	100.0%	No	No	No	No	No	A	5B9H

Parameter Number	Name: Display	Description	Setting Range	Factory Setting	Change during Operation	Control Methods: V/f	V/f with PG	Open Loop Vector 1	Flux Vector	Open Loop Vector 2	MODBUS Register
n4-35	U1-48 Gain Reduction Coefficient U1-48 Reduce Gain	Setting this parameter to a low value can improve operation when acceleration during low speeds or regeneration needs to be suppress. Be sure to keep this setting high enough to avoid causing a CF error.	0.50 to 1.50	1	No	No	No	No	No	A	5BAH
n4-39	Flux Level at Low Frequency Flux Lvl @LowFrq	Set this parameter to a small value if the torque value is relatively high compared to the actual load that has been set. Used during low speed operation. (The magnitude of the rated flux level as 100%)	50 to 150%	90%	No	No	No	No	No	A	5BEH
n4-40	Current Stability Coefficient at Low Speed I Stabilize Gain	Reduce this setting if the motor oscillates when stopped with torque reference at zero. Do not adjust this setting more than is necessary, verify the results as changes are made.	0.01 to 1.00	0.5	No	No	No	No	No	A	5BFH
n4-43	Speed Estimation Compensation Gain SpdEst Comp Gain	Adjust this parameter to improve accuracy of speed estimation under these conditions. 1. Drive in torque control mode. 2. Speed control is set to d5-07. 3. Set b1-10=0 4. Make the following adjustment: Increase the value when attempting to estimate the speed of the motor. Caution: The motor may have difficulty stopping with small friction loads. (even if the torque reference is set to zero).	0.00 to 2.00	0	No	No	No	No	No	A	5C2H

■Feed Forward: n5

User parameters for the feed forward control are shown in the following table.

Parameter Number	Name: Display	Description	Setting Range	Factory Setting	Change during Operation	Control Methods: V/f	V/f with PG	Open Loop Vector 1	Flux Vector	Open Loop Vector 2	MODBUS Register
n5-01	Feed Forward Control Selection Feedfoward Sel	Selects the feed forward controls. 0: Disabled 1: Enabled	0 or 1	0 *1	No	No	No	No	A	A	5B0H
n5-02	Motor Acceleration Time Motor Accel Time	Sets the time required to accelerate the motor at the rated torque (T100) to the rated speed (Nr). J: (GO^2) / 4 P: Motor rated output	0.000 to 10.000	0.178 s *2	No	No	No	No	A	A	5B1H
n5-03	Feedfoward Gain Feedfoward Gain	Sets the proportional gain for feed forward controls. Response to the speed reference will increase as the setting of n5-03 is increased.	0.00 to 100.00	1.0	No	No	No	No	A	A	5B2H

* 1. Initial values differ based on the control mode (when operating in Vector Mode w/PG, the initial value is set to zero (disabled), and in Vector 2 wo/PG the initial value is 1, or "enabled").

* 2. Factory settings will vary based on drive capacity (values given here are for 208-240Vac, 0.4kW).

◆ Digital Operator Parameters: o

The following settings are made with the Digital Operator parameters (o parameters): Multi-function selections and the copy function.Monitor Select: o1

User parameters for Digital Operator Displays are shown in the following table.

Parameter Number	Name: Display	Description	Setting Range	Factory Setting	Change during Operation	Control Methods: V/f	V/f with PG	Open Loop Vector 1	Flux Vector	Open Loop Vector 2	MODBUS Register
o1-01	User Monitor Selection User Monitor Sel	Selects which monitor will be displayed in the operation menu upon power-up when o1-02 = 4.	4 to 48	6	Yes	A	A	A	A	A	500H
o1-02	User Monitor Selection After Power-Up Power-On Monitor	Selects which monitor will be displayed upon power-up. 1: Frequency Reference (U1-01) 2: Output Frequency (U1-02) 3: Output Current (U1-03) 4: User Monitor (set by o1-01)	1 to 4	1	Yes	A	A	A	A	A	501H
o1-03	Digital Operator Display Selection Display Scaling	Sets the units of the Frequency References (d1-01 to d1-17), the Frequency Reference Monitors (U1-01, U1-02, U1-05), and the Modbus communication frequency reference. 0: Hz 1: % (100% = E1-04) 2 to 39: RPM (Enter the number of motor poles). 40 to 39999: User display. Set the number desired at maximum output frequency. 4 digit number. Number of digits from the right of the decimal point. Example 1: o1-03 = 12000, will result in frequency reference from 0.0 to 200.0 (200.0 = Fmax). Example 2: o1-03 = 21234, will result in frequency reference from 0.00 to 12.34 (12.34 = Fmax).	0 to 39999	0	No	A	A	A	A	A	502H

Parameter Number	Name: Display	Description	Setting Range	Factory Setting	Change during Operation	Control Methods: V/f	V/f with PG	Open Loop Vector 1	Flux Vector	Open Loop Vector 2	MODBUS Register
o1-04	Setting unit for frequency parameters related to V/F characteristics V/f Display Unit	Sets the setting units related to V/F pattern frequency related parameters (E1-04, -06, -09, -11) 0: Hertz 1: RPM	0 or 1	0	No	No	No	No	A	A	503H
o1-05	LCD Brightness Adjustment LCD Contrast	Sets the contrast of the Digital Operator LCD. A setting of "1" is the lightest contrast and a setting of "5" is the darkest contrast.	0 to 5	3	Yes	A	A	A	A	A	504H

■Multi-function Selections: o2

User parameters for Digital Operator key functions are shown in the following table.

Parameter Number	Name: Display	Description	Setting Range	Factory Setting	Change during Operation	Control Methods: V/f	V/f with PG	Open Loop Vector 1	Flux Vector	Open Loop Vector 2	MODBUS Register
o2-01	Local/ Remote Key Function Selection Local/ Remote Key	Determines if the Digital Operator Local/Remote key is functional. 0: Disabled 1: Enabled	0 to 1	1	No	A	A	A	A	A	505H
o2-02	STOP Key Function Selection Oper STOP Key	Determines if the STOP key on the Digital Operator will stop the Drive when Drive is operating from external terminals or serial communication. 0: Disabled 1: Enabled	0 to 1	1	No	A	A	A	A	A	506H
o2-03	User Parameter Default Value User Defaults	Allows storing of parameter settings as a User Initialization Selection. 0: No Change 1: Set Defaults - Saves current parameter settings as user initialization. A1-03 now allows selecting <1110> for user initialization and returns o2-03 to zero. 2: Clear All - Clears the currently saved user initialization. A1-03 no longer allows selecting <1110> and returns o2-03 to zero.	0 to 2	0	No	A	A	A	A	A	507H

Parameter Number	Name: Display	Description	Setting Range	Factory Setting	Change during Operation	Control Methods: V/f	V/f with PG	Open Loop Vector 1	Flux Vector	Open Loop Vector 2	MODBUS Register
o2-04	Drive/kVA Selection Drive Model #	Sets the kVA of the Drive. Enter the number based on Drive model number. Use the last four digits of the model number. CIMR-F7Uxxxx. This parameter only needs to be set when installing a new control board. Do not change for any other reason. Refer to Table B.1.	0 to FF	0*	No	A	A	A	A	A	508H
o2-05	Frequency Reference Setting Method Selection Operator M.O.P.	Determines if the Data/Enter key must be used to input a frequency reference from the Digital Operator. 0: Disabled - Data/Enter key must be pressed to enter a frequency reference. 1: Enabled - Data/Enter key is not required. The frequency reference is adjusted by the up and down arrow keys on the Digital Operator without having to press the data/enter key.	0 to 1	0	No	A	A	A	A	A	509H
o2-06	Operation Selection when Digital Operator is Disconnected Oper Detection	Determines if the Drive will stop when the Digital Operator is removed when in LOCAL mode or b1-02=0. 0: Disabled - The Drive will not stop when the Digital Operator is removed. 1: Enabled - The Drive will fault (OPR) and coast to stop when the Digital Operator is removed.	0 to 1	0	No	A	A	A	A	A	50AH
o2-07	Cumulative Operation Time Setting Elapsed Time Set	Sets the initial value of the elapsed operation timer U1-13.	0 to 65535	0 hr	No	A	A	A	A	A	50BH
o2-08	Cumulative Operation Time Selection Elapsed Time Run	Sets how time is accumulated for the elapsed operation timer U1-13. 0: Power-On Time - Time accumulates when the Drive is powered. 1: Running Time - Time accumulates only when the Drive is running.	0 to 1	0	No	A	A	A	A	A	50CH
o2-10	Cumulative Cooling Fan Operation Time Setting Fan ON Time Set	Sets the initial value of the heatsink fan operation time monitor U1-40.	0 to 65535	0 hr	No	A	A	A	A	A	50EH

Parameter Number	Name: Display	Description	Setting Range	Factory Setting	Change during Operation	Control Methods: V/f	V/f with PG	Open Loop Vector 1	Flux Vector	Open Loop Vector 2	MODBUS Register
o2-12	Fault Trace/ Fault History Clear Function Fault Trace Init	Clears the fault memory contained in the U2 and U3 monitors. 0: Disabled - no effect 1: Enabled - resets U2 and U3 monitors, and returns o2-12 to zero.	0 to 1	0	No	A	A	A	A	A	510H
o2-14	kWh User Monitor Initialization kWH MonitorClear	Used to reset the kilowatt-hour monitor U1-29 to zero. 0: Disabled - no change 1: Enabled - Resets U1-29 to zero and returns o2-14 to zero.	0 to 1	0	No	A	A	A	A	A	512H

* Factory settings will vary based on drive capacity (values given here are for 208-240Vac, 0.4kW).

■ Copy Function: o3

User parameters for the copy function are shown in the following table.

Parameter Number	Name: Display	Description	Setting Range	Factory Setting	Change during Operation	Control Methods: V/f	V/f with PG	Open Loop Vector 1	Flux Vector	Open Loop Vector 2	MODBUS Register
o3-01	Copy Function Selection Copy Function Sel	This parameter controls the copying of parameters to and from the Digital Operator. 0: COPY SELECT (no function) 1: INV --> OP READ - All parameters are copied from the Drive to the Digital Operator. 2: OP --> INV WRITE - All parameters are copied from the Digital Operator to the Drive. 3: OP<-->INV VERIFY - Parameter settings in the Drive are compared to those in the Digital Operator. Note: When using the copy function, the Drive model number (o2-04), software number (U1-14), and control method (A1-02) must match or an error will occur.	0 to 3	0	No	A	A	A	A	A	515H
o3-02	Copy Allowed Selection Copy Allowable	Enables and disables the Digital Operator copy functions. 0: Disabled - No Digital Operator copy functions are allowed. 1: Enabled - Copying allowed.	0 to 1	0	No	A	A	A	A	A	516H

◆ T: Motor Autotuning

The following settings are made with the motor autotuning parameters (T parameters): Settings for autotuning.

Parameter Number	Name: Display	Description	Setting Range	Factory Setting	Change during Operation	Control Methods: V/f	V/f with PG	Open Loop Vector 1	Flux Vector	Open Loop Vector 2	MODBUS Register
T1-00	Motor Selection 1/2 Select Motor	Selects which set of motor parameters are to be used and set during Auto-Tuning. If Motor 2 selection (H1-xx=16) is not selected, this parameter will not be displayed. 1: 1st Motor - E1 to E2 2: 2nd Motor - E3 to E4	1 to 2	1	No	Yes	Yes	Yes	Yes	Yes	700H
T1-01	Auto-Tuning Mode Selection Tuning Mode Sel	Selects the Auto-Tuning mode. 0: Rotational Auto-Tuning (A1-02 = 2 or 3) 1: Stationary Auto-Tuning (A1-02 = 2 or 3) 2: Terminal resistance only, (stationary) Auto-Tuning (A1-02 = 0, 1, 2, or 3) 3: Auto-tuning for the amount of On-Delay Compensation (open loop vector 2 and flux vector modes are enabled). *6	0 to 2 *1	0	No	Yes	Yes	Yes	Yes	Yes	701H
T1-02	Motor Rated Power Mtr Rated Power	Sets the motor rated power in kilowatts (kW). Note: If motor power is given in horsepower, power in kW can be calculated using the following formula: kW = Hp X 0.746	0.00 to 650.00	0.40 kW	No	Yes	Yes	Yes	Yes	Yes	702H
T1-03	Motor Rated Voltage Rated Voltage	Sets the motor rated voltage in Volts (V).	0 to 255.0 *2	200.0 V *2	No	No	No	Yes	Yes	Yes	703H
T1-04	Motor Rated Current Rated Current	Sets the motor rated current in Amperes (A).	0.32 to 6.40 *4	1.90 A *3	No	Yes	Yes	Yes	Yes	Yes	704H
T1-05	Motor Base Frequency Rated Frequency	Sets the base frequency of the motor in Hertz (Hz).	0 to 400.0 *5	60.00Hz	No	No	No	Yes	Yes	Yes	705H
T1-06	Number of Motor Poles Number of Poles	Sets the number of motor poles.	2 to 48 poles	4 poles	No	No	No	Yes	Yes	Yes	706H

Parameter Number	Name: Display	Description	Setting Range	Factory Setting	Change during Operation	Control Methods: V/f	V/f with PG	Open Loop Vector 1	Flux Vector	Open Loop Vector 2	MODBUS Register
T1-07	Motor Base Speed Rated Speed	Sets the base speed of the motor in revolutions per minute (RPM).	0 to 24000	1750 min^{-1}	No	No	No	Yes	Yes	Yes	707H
T1-08	Number of PG Pulses PG Pulses/ Rev	Sets the number of pulses per revolution (PPR) for the encoder (pulse generator) being used without any multiplication factor.	0 to 60000	600	No	No	Yes	No	Yes	No	708H

* 1. Set T1-02 and T1-04 when 2 is set for T1-01. Only set value 2 is possible for V/f control or V/f control with PG.
* 2. Setting value for 208-240Vac. Double the value when working with 380-480Vac drives.
* 3. Factory settings will vary based on drive capacity (values given here are for 208-240Vac, 0.4kW).
* 4. Setting range is 10% to 200% of the drive's rated output current (values given here are for 208-240Vac, 0.4kW).
* 5. The upper setting limit will be 150.0Hz when C6-01 is set to 0.
* 6. Use this type of auto-tuning only if having problems with precision when tuning.

◆ U: Monitor Parameters

The following settings are made with the monitor parameters (U parameters): Setting parameters for monitoring in drive mode.

■ Status Monitor Parameters: U1

The parameters used for monitoring status are listed in the following table.

Parameter Number	Name: Display	Description	Output Signal Level During Multi-Function Analog Output	Min. Unit	Control Methods: V/f	V/f with PG	Open Loop Vector 1	Flux Vector	Open Loop Vector 2	MODBUS Register
U1-01	Frequency Reference Frequency Ref	Frequency reference (speed command) monitor when in REMOTE mode, frequency reference (speed command) setting location when in local mode or b1-01 = 0.*	10V: Maximum Frequency (possible for -10V thru +10V)	0.01 Hz	A	A	A	A	A	40H
U1-02	Output Frequency Output Freq	Output frequency.*	10V: Maximum Frequency (possible for -10V thru +10V)	0.01 Hz	A	A	A	A	A	41H
U1-03	Output Current Output Current	Output current	10V: Drive Rated Output Current (output of absolute value of 0V thru +10V possible)	0.1 A	A	A	A	A	A	42H
U1-04	Control Method Control Method	Control method set in A1-02. 0 = V/F without PG 1 = V/F with PG 2 = Open Loop Vector 3 = Flux Vector 4 = Open Loop Vector 2	No output possible.	-	A	A	A	A	A	43H
U1-05	Motor Speed Motor Speed	Motor speed feedback*	10V: Maximum Frequency (possible for -10V thru +10V)	0.01 Hz	No	A	A	A	A	44H
U1-06	Output Voltage Output Voltage	Output voltage	10V: AC200V (AC400V) (output of 0V thru +10V)	0.1 V	A	A	A	A	A	45H
U1-07	DC bus Voltage DC Bus Voltage	DC Bus Voltage	10V: DC400V (DC800V) (output of 0V thru +10V)	1 V	A	A	A	A	A	46H
U1-08	Output Power Output kWatts	Output power	10V: Drive Capacity in kW (Largest Application Motor Capacity) (possible for -10V thru +10V)	0.1 kW	A	A	A	A	A	47H

Parameter Number	Name: Display	Description	Output Signal Level During Multi-Function Analog Output	Min. Unit	Control Methods: V/f	V/f with PG	Open Loop Vector 1	Flux Vector	Open Loop Vector 2	MODBUS Register
U1-09	Torque Reference Torque Reference	Torque reference	10V: Motor Rated Torque (possible for -10V thru +10V)	0.1%	No	No	A	A	A	48H

* The unit is set in o1-03 (frequency units of reference setting and monitor).

Parameter Number	Name: Display	Description	Output Signal Level During Multi-Function Analog Output	Min. Unit	Control Methods: V/f	V/f with PG	Open Loop Vector 1	Flux Vector	Open Loop Vector 2	MODBUS Register
U1-10	Input Terminal Status Input Term Sts	Input terminal status. U1-10= 00000000 └1: FWD command (S1) is ON. └1: REV command (S2) is ON. └1: Multi input 1 (S3) is ON. └1: Multi input 2 (S4) is ON. └1: Multi input 3 (S5) is ON. └1: Multi input 4 (S6) is ON. └1: Multi input 5 (S7) is ON. └1:Multi input 6 (S8) is ON.	No output possible.	-	A	A	A	A	A	49H
U1-11	Output Terminal Status Output Term Sts	Output terminal status. U1-11= 00000000 └1: Multi-function contact output 1 (M1-M2) is ON. └1: Multi-funtion contact output 2 (P1) is ON. └1: Multi-funtion contact output 3 (P2) is ON. └Not used (always 0). └1: Error output (MA/AB-MC) is ON.	No output possible.	-	A	A	A	A	A	4AH
U1-12	Drive Operation Status Int Ctl Sts 1	Input terminal status.. U1-12= 00000000 └1: Run └1: Zero speed └1: Reverse └1: Reset signal input └1: Speed agree └1: Inverter ready └1: Minor fault └1: Major fault	No output possible.	-	A	A	A	A	A	4BH

Parameter Number	Name: Display	Description	Output Signal Level During Multi-Function Analog Output	Min. Unit	Control Methods: V/f	V/f with PG	Open Loop Vector 1	Flux Vector	Open Loop Vector 2	MODBUS Register
U1-13	Cumulative Operation Time Elapsed Time	Total operating or power-on time of the Drive.	No output possible.	1 hr	A	A	A	A	A	4CH
U1-14	Software Number FLASH ID	Last 5 digits of the Drive's software number.	No output possible.	-	A	A	A	A	A	4DH
U1-15	Terminal A1 Input Voltage Term A1 Level	Input voltage on Terminal A1, as a percentage of ±10Vdc.	10V: 100% (when input is 10V) (possible for -10V thru +10V)	0.1 %	A	A	A	A	A	4EH
U1-16	Terminal A2 Input Voltage Term A2 Level	Displays the input current (or voltage) on Terminal A2, as a percentage of ±10Vdc.	10V: 100% (when input is 10V) (possible for -10V thru +10V)	0.1 %	A	A	A	A	A	4FH
U1-17	Terminal A3 Input Voltage Term 16 Level	Input voltage on Terminal A3, as a percentage of ±10Vdc.	10V: 100% (when input is 10V) (possible for -10V thru +10V)	0.1 %	A	A	A	A	A	050H
U1-18	Motor Secondary Current (Iq) Mot SEC Current	Current being used by the motor to produce torque (Iq).	10V: Motor Rated Secondary Current (possible for -10V thru +10V)	0.1 %	A	A	A	A	A	51H
U1-19	Motor Excitation Current (Id) Mot EXC Current	Current being used by the motor for excitation (Id).	10V: Motor Rated Secondary Current (possible for -10V thru +10V)	0.1 %	No	No	A	A	A	52H
U1-20	Output Frequency After Soft Start SFS Output	Frequency reference (speed command) after the accel and decel ramps and S-curve.	10V: Maximum Frequency (possible for -10V thru +10V)	0.01Hz	A	A	A	A	A	53H
U1-21	ASR Input ASR Input	Input error to the speed control loop (ASR). The maximum output frequency E1-04 corresponds to 100%.	10V: Maximum Frequency (possible for -10V thru +10V)	0.01%	No	A	No	A	A	54H
U1-22	ASR Output ASR Output	Output from the speed control loop (ASR). The motor rated secondary current corresponds to 100%.	10V: Motor Rated Secondary Current (possible for -10V thru +10V)	0.01%	No	A	No	A	A	55H

Parameter Number	Name: Display	Description	Output Signal Level During Multi-Function Analog Output	Min. Unit	Control Methods: V/f	V/f with PG	Open Loop Vector 1	Flux Vector	Open Loop Vector 2	MODBUS Register
U1-24	PI Feedback Value / PID Feedback	Feedback signal level when PID control is used.	10V: Maximum Frequency (possible for -10V thru +10V)	0.01%	A	A	A	A	A	57H
U1-25	DI-16H2 Input Status / DI-16 Reference	Reference value from a DI-16H2 Digital Reference Card. The value will be displayed in binary or BCD depending on user constant F3-01.	No output possible.	-	A	A	A	A	A	58H
U1-26	Output Voltage Reference (Vq) / Voltage Ref (Vq)	Internal voltage reference for motor secondary current control.	10V: AC200V (AC400) (possible for -10V thru +10V)	0.1 V	No	No	A	A	A	59H
U1-27	Output Voltage Reference (Vd) / Voltage Ref (Vd)	Internal voltage reference for motor excitation current control.	10V: AC200V (AC400) (possible for -10V thru +10V)	0.1 V	No	No	A	A	A	5AH
U1-28	CPU Number / CPU ID	Control board hardware revision.	No output possible.	-	A	A	A	A	A	5BH
U1-29	kWh / kWh Lower 4 dig	Accumulated kilowatt-hours.	No output possible.	0.1 KWH	A	A	A	A	A	5CH
U1-30	MWh / kWh Upper 5 dig	Accumulated megawatt-hours.	No output possible.	MWH	A	A	A	A	A	5DH
U1-32	ACR Output of q Axis / ACR(q) Output	Current control output value for the motor secondary current.	10V: 100% (possible for -10V thru +10V)	0.1 %	No	No	A	A	A	5FH
U1-33	ACR Output of d Axis / ACR(d) Output	Current control output value for the motor excitation current.	10V: 100% (possible for -10V thru +10V)	0.1 %	No	No	A	A	A	60H

Parameter Number	Name Display	Description	Output Signal Level During Multi-Function Analog Output	Min. Unit	Control Methods V/f	V/f with PG	Open Loop Vector 1	Flux Vector	Open Loop Vector 2	MODBUS Register
U1-34	First Parameter Causing an OPE OPE Detected	Parameter number causing an "OPE" fault.	No output possible.	-	A	A	A	A	A	61H
U1-35	Zero Servo Pulse Count Zero Servo Pulse	Number of PG pulses times 4 for the movement range when stopped at zero servo.		1	No	No	No	A	No	62H
U1-36	PID Input PID Input	Input error to the PID regulator (PID Setpoint - PID Feedback).	10V: Maximum Frequency (possible for -10V thru +10V)	0.01%	A	A	A	A	A	63H
U1-37	PID Output PID Output	Output of the PID regulator as a percentage of maximum frequency (E1-04).	10V: Maximum Frequency (possible for -10V thru +10V)	0.01%	A	A	A	A	A	64H
U1-38	PID Setpoint PID Setpoint	Setpoint of the PID regulator (PID reference + PID bias).	10V: Maximum Frequency	0.01%	A	A	A	A	A	65H
U1-39	Modbus Communication Error Code Transmit Err	Modbus serial communication error codes. U1-40= 00000000 └1: CRC error └1: Data length error └Not used (always 0). └1: Parity error └1: Overrun error └1: Framing error └1: Timeout └Not used (always 0).	No output possible.	-	A	A	A	A	A	66H
U1-40	Heatsink Cooling Fan Operation Time FAN Elapsed Time	Total operating time of the heatsink cooling fan.	No output possible.	1 hr	A	A	A	A	A	68H
U1-42	Motor Flux Calculation Values Mot Flux EST	Monitors the calculated motor flux.	10V: Monitor rated flux.	0.1 %	No	No	No	No	A	69H
U1-43	Motor Flux Current Compensation Id Comp Value	Shows 100% when the motor rated secondary current monitor for motor flux current compensation is active.	10V: Motor Rated Secondary Current (0V to ±10V)	0.1 %	No	No	No	No	A	6AH

Parameter Number	Name: Display	Description	Output Signal Level During Multi-Function Analog Output	Min. Unit	Control Methods: V/f	V/f with PG	Open Loop Vector 1	Flux Vector	Open Loop Vector 2	MODBUS Register
U1-44	ASR Output without Filter ASR Output w Fil	Output from the speed control loop (ASR) before the ASR primary delay filter (C5-06). 100% is displayed for rated secondary current of the motor.	10V: Motor Rated Secondary Current (0V to ±10V)	0.01%	No	No	No	A	A	6BH
U1-45	Feed Forward Control Output FF Cout Output	Output from feed forward control. 100% is displayed for rated secondary current of the motor.	10V: Motor Rated Secondary Current (0V to ±10V)	0.01%	No	No	No	A	A	6CH
U1-50	CF Fault Error Code CF Error Code	Displays the code for a CF fault: 00: No deceleration for 3sec after reaching the stop frequency. 01: Flux estimation fault. 02: Start status error. 04: Observer gain adjustment error. 08: Regeneration error at low speeds. 10: Zero Speed error. 20: Rotational Direction Limit error. 80: Vector control status error	Setting Range (0 thru FFFFFH)	-	No	No	No	No	A	71H

■ Fault Trace: U2

User parameters for error tracing are shown in the following table

.

Parameter Number	Name: Display	Description	Output Signal Level During Multi-Function Analog Output	Min. Unit	Control Methods: V/f	V/f with PG	Open Loop Vector 1	Flux Vector	Open Loop Vector 2	MODBUS Register
U2-01	Current Fault Current Fault	Description of current fault.	No output possible.	-	A	A	A	A	A	80H
U2-02	Previous Fault Last Fault	Desscription of most recent fault.		-	A	A	A	A	A	81H
U2-03	Frequency Reference at Previous Fault Frequency Ref	Gives the frequency reference at the most recent fault.		0.01 Hz	A	A	A	A	A	82H
U2-04	Output Frequency at Previous Fault Output Freq	Shows the output frequency at the most recent fault.		0.01 Hz	A	A	A	A	A	83H
U2-05	Output Current at Previous Fault Output Current	Gives the output current at the most recent fault.		0.1 A	A	A	A	A	A	84H
U2-06	Motor Speed at Previous Fault Motor Speed	Shows the motor speed at the most recent fault.		0.01 Hz	No	A	A	A	A	85H
U2-07	Output Voltage at Previous Fault Output Voltage	Gives the output voltage at the most recent fault.		0.1 V	A	A	A	A	A	86H
U2-08	DC Bus Voltage at Previous Fault DC Bus Voltage	Shows the DC BUS voltage at the most recent fault.		1 V	A	A	A	A	A	87H
U2-09	Output Power at Previous Fault Output kWatts	Gives the output power at the most recent fault.		0.1 kW	A	A	A	A	A	88H

Parameter Number	Name: Display	Description	Output Signal Level During Multi-Function Analog Output	Min. Unit	Control Methods: V/f	V/f with PG	Open Loop Vector 1	Flux Vector	Open Loop Vector 2	MODBUS Register
U2-10	Torque Reference at Previous Fault Torque Reference	Gives the torque reference at the most recent fault.	No output possible.	0.1%	No	No	A	No	A	89H
U2-11	Input Terminal Status at Previous Fault Input Term Sts	Shows the input terminal status at the most recent fault.		-	A	A	A	A	A	8AH
U2-12	Output Terminal Status at Previous Fault Output Term Sts	Gives the output terminal status at the most recent fault.		-	A	A	A	A	A	8BH
U2-13	Drive Operation Status at Previous Fault Inverter Status	Displays the Drive Operation Status at the most recent fault.		-	A	A	A	A	A	8CH
U2-14	Cumulative Operation Time at Previous Fault Elapsed time	Gives the cumulative operation time at the previous fault.		1 hr	A	A	A	A	A	8DH

Note The following errors are not included in the error trace: CPF00, 01, 02, 03, UV1, and UV2.

■Fault History: U3

User parameters for the error log are shown in the following table.

Parameter Number	Name: Display	Description	Output Signal Level During Multi-Function Analog Output	Min. Unit	Control Methods: V/f	V/f with PG	Open Loop Vector 1	Flux Vector	Open Loop Vector 2	MODBUS Register
U3-01	Most Recent Fault / Last Fault	Shows the most recent fault.	No output possible.	-	A	A	A	A	A	90H
U3-02	2nd Most Recent Fault / Fault Message 2	Shows the second most recent fault.		-	A	A	A	A	A	91H
U3-03	3rd Most Recent Fault / Fault Message 3	Shows the third most recent fault.		-	A	A	A	A	A	92H
U3-04	4th Most Recent Fault / Fault Message 4	Shows the fourth most recent fault.		-	A	A	A	A	A	93H
U3-05	Cumulative Operation Time at Most Recent Fault / Elapsed Time 1	Gives the cumulative operation time at the most recent fault.		1 hr	A	A	A	A	A	94H
U3-06	Cumulative Operation Time at 2nd Most Recent Fault / Elapsed Time 2	Gives the cumulative operation time at the second most recent fault.		1 hr	A	A	A	A	A	95H
U3-07	Cumulative Operation Time at 3rd Most Recent Fault / Elapsed Time 3	Gives the cumulative operation time at the third most recent fault.		1 hr	A	A	A	A	A	96H
U3-08	Cumulative Operation Time at 4th Most Recent Fault / Elapsed Time 4	Gives the cumulative operation time at the fourth most recent fault.		1 hr	A	A	A	A	A	97H
U3-09	5th Most Recent Fault / Fault Message 5	Shows the fifth most recent fault.		-	A	A	A	A	A	804H
U3-10	6th Most Recent Fault / Fault Message 6	Shows the sixth most recent fault.		-	A	A	A	A	A	805H

Parameter Number	Name: Display	Description	Output Signal Level During Multi-Function Analog Output	Min. Unit	Control Methods: V/f	V/f with PG	Open Loop Vector 1	Flux Vector	Open Loop Vector 2	MODBUS Register
U3-11	7th Most Recent Fault Fault Message 7	Shows the seventh most recent fault.	No output possible.	-	A	A	A	A	A	806H
U3-12	8th Most Recent Fault Fault Message 8	Shows the eighth most recent fault.		-	A	A	A	A	A	807H
U3-13	9th Most Recent Fault Fault Message 9	Shows the ninth most recent fault.		-	A	A	A	A	A	808H
U3-14	10th Most Recent Fault Fault Message 10	Shows the tenth most recent fault.		-	A	A	A	A	A	809H
U3-15	Cumulative Operation Time at 5th Most Recent Fault Elapsed Time 5	Gives the cumulative operation time at the fifth most recent fault.		1 hr	A	A	A	A	A	80EH
U3-16	Cumulative Operation Time at 6th Most Recent Fault Elapsed Time 6	Gives the cumulative operation time at the sixth most recent fault.		1 hr	A	A	A	A	A	80FH
U3-17	Cumulative Operation Time at 7th Most Recent Fault Elapsed Time 7	Gives the cumulative operation time at the seventh most recent fault.		1 hr	A	A	A	A	A	810H
U3-18	Cumulative Operation Time at 8th Most Recent Fault Elapsed Time 8	Gives the cumulative operation time at the eighth most recent fault.		1 hr	A	A	A	A	A	811H
U3-19	Cumulative Operation Time at 9th Most Recent Fault Elapsed Time 9	Gives the cumulative operation time at the ninth most recent fault.		1 hr	A	A	A	A	A	812H
U3-20	Cumulative Operation Time at 10th Most Recent Fault Elapsed Time 10	Gives the cumulative operation time at the tenth most recent fault.		1 hr	A	A	A	A	A	813H

Note The following errors are not recorded in the error log: CPF00, 01, 02, 03, UV1, and UV2.

◆ Factory Settings that Change with the Control Method (A1-02)

The factory settings of the following user parameters will change if the control method (A1-02) is changed.

Parameter Number	Name	Setting Range	Unit	Factory Setting				
	Display			V/f Control	V/f with PG	Open Loop Vector 1	Flux Vector	Open Loop Vector 2
b3-01	Speed Search Selection SpdSrch at Start	0 to 3	1	2	3	2	-	2
b3-02	Speed Search Deactivation Current SpdSrch Current	0 to 200	1%	120	-	100	-	10
b8-02	Energy Saving Gain Energy Save Gain	0.0 to 10.0	0.1	-	-	0.7	1.0	0.7
b8-03	Energy Saving Control Filter Time Constant Energy Save F.T	0.0 to 10.00	0.01 s	-	-	0.50	0.01	0.50
C3-01	Slip Compensation Gain Slip Comp Gain	0.0 to 2.5	0.1	0.0	-	1.0	1.0	1.0
C3-02	Slip Compensation Primary Delay Time Slip Comp Time	0 to 10000	1ms	2000	-	200	-	-
C4-02	Torque Compensation Primary Delay Time Torq Comp Time	0 to 10000	1ms	200	200	20	-	-
C5-01	ASR Proportional Gain 1 ASR P Gain 1	0.00 to 300.00	0.01	-	0.20	-	20.00	10.00
C5-02	ASR Integral Time 1 ASR I Time 1	0.000 to 10.000	0.001sec	-	0.200	-	0.500	0.500
C5-03	ASR Proportional Gain 2 ASR P Gain 2	0.00 to 300.00	0.01	-	0.02	-	20.00	10.00
C5-04	ASR Integral Time 2 ASR I Time 2	0.000 to 10.000	0.001sec	-	0.050	-	0.500	0.500
C5-06	ASR Primary Delay Time Constant ASR Delay Time	0.000 to 0.500	0.001	-	-	-	0.004	0.010
d5-02	Torque Reference Delay Time Torq Ref Filter	0 to 1000	1ms	-	-	-	0	10
E1-04 E3-02	Maximum Output Frequency Max Frequency	0.0 to 400.0	0.1Hz	60.0 *3	60.0 *3	60.0	60.0	60.0
E1-05 E3-03	Maximum Output Voltage Max Voltage	0.0 to 255.0	0.1 V	200.0 *3	200.0 *3	200.0	200.0	200.0
E1-06 E3-04	Base Frequency Base Frequency	0.0 to 400.0	0.1Hz	60.0 *3	60.0 *3	60.0	60.0	60.0

Parameter Number	Name	Setting Range	Unit	Factory Setting				
	Display			V/f Control	V/f with PG	Open Loop Vector 1	Flux Vector	Open Loop Vector 2
E1-07 E3-05	Mid Output Frequency A Mid Frequency A	0.0 to 400.0	0.1Hz	3.0 *3	3.0 *3	3.0	0.0	0.0
E1-08 E3-06	Mid Output Voltage A *2 Mid Voltage A	0.0 to 255.0 (0.0 to 510.0)	0.1 V	15.0 *3	15.0 *3	11.0	0.0	0.0
E1-09 E3-07	Minimum Output Frequency Min Frequency	0.0 to 400.0	0.1Hz	1.5 *3	1.5 *3	0.5	0.0	0.3
E1-10 E3-08	Minimum Output Voltage *2 Min Voltage	0.0 to 255.0 (0.0 to 510.0)	0.1 V	9.0 *3	9.0 *3	2.0	0.0	1.0
F1-09	Overspeed Detection Delay Time PG Overspd Time	0.0 to 2.0	0.1 s	-	1.0	-	0.0	0.0
n5-01	Feed Forward Control Selection Feedfoward Sel	0, 1	1	-	-	-	0	1

* 1. The settings will be 0.05 (Flux vector)/2.00 (Open-loop vector) for drives of 55kW or larger.
* 2. The settings shown are for 208-240Vac Drives. The values will double for 380-480Vac Drives.
* 3. Settings vary as shown in the following tables depending on the Drive capacity and E1-03.
* 4. The setting range is 0 to 66.0 for open-loop vector control 2.

■208-240Vac and 380-480Vac Drives of 0.4 to 1.5 kW

Table 5.1 V/F Pattern for Drive Capacities G7U20P4 - 21P5 for 208-240V Class										
Parameter No.	Name	Unit	Factory Setting							
E1-03	V/F Pattern Selection	—	0	1	2	3	4	5	6	7
E1-04	Max. Output Frequency	Hz	50.0	60.0	60.0	72.0	50.0	50.0	60.0	60.0
E1-05	Max. Output Voltage	V	230.0	230.0	230.0	230.0	230.0	230.0	230.0	230.0
E1-06	Base Frequency	Hz	50.0	60.0	50.0	60.0	50.0	50.0	60.0	60.0
E1-07	Mid. Output Frequency	V	2.5	3.0	3.0	3.0	25.0	25.0	30.0	30.0
E1-08	Mid. Output Voltage	V	17.2	17.2	17.2	17.2	40.2	57.5	40.2	57.5
E1-09	Min. Output Frequency	Hz	1.3	1.5	1.5	1.5	1.3	1.3	1.5	1.5
E1-10	Min. Output Voltage	V	10.3	10.3	10.3	10.3	9.2	10.3	9.2	10.3

1. The setting shown are for 208-240Vac Drives. The values will double for 380-480Vac Drives..
2. These default values are for V/F or V/F with PG control methods (A1-02 = 0 or 1)

■208-240Vac and 380-480Vac Drives of 0.4 to 1.5 kW

Table 5.3 V/F Pattern for Drive Capacity G7U20P4 - 21P5 for 208-240V Class (continued)										
Parameter No.	Name	Unit	Factory Setting							
E1-03	V/F Pattern Selection	—	8	9	A	B	C	D	E	F & FF
E1-04	Max. Output Frequency	Hz	50.0	50.0	60.0	60.0	90.0	120.0	180.0	60.0
E1-05	Max. Output Voltage	V	230.0	230.0	230.0	230.0	230.0	230.0	230.0	230.0
E1-06	Base Frequency	Hz	50.0	50.0	60.0	60.0	60.0	60.0	60.0	60.0
E1-07	Mid. Output Frequency	V	2.5	2.5	3.0	3.0	3.0	3.0	3.0	3.0
E1-08	Mid. Output Voltage	V	21.8	27.6	21.8	27.6	17.2	17.2	17.2	17.2
E1-09	Min. Output Frequency	Hz	1.3	1.3	1.5	1.5	1.5	1.5	1.5	1.5
E1-10	Min. Output Voltage	V	12.6	14.9	12.6	17.2	10.3	10.3	10.3	10.3

1. The setting shown are for 208-240Vac Drives. The values will double for 380-480Vac Drives..
2. These default values are for V/F or V/F with PG control methods (A1-02 = 0 or 1)

208-240Vac and 380-480Vac Drives of 2.2 to 45 kW

Table 5.4 V/F Pattern for Drive Capacity G7U22P2 - 2045 for 208-240V Class

Parameter No.	Name	Unit	Factory Setting							
E1-03	V/F Pattern Selection	—	0	1	2	3	4	5	6	7
E1-04	Max. Output Frequency	Hz	50.0	60.0	60.0	72.0	50.0	50.0	60.0	60.0
E1-05	Max. Output Voltage	V	230.0	230.0	230.0	230.0	230.0	230.0	230.0	230.0
E1-06	Base Frequency	Hz	50.0	60.0	50.0	60.0	50.0	50.0	60.0	60.0
E1-07	Mid. Output Frequency	V	2.5	3.0	3.0	3.0	25.0	25.0	30.0	30.0
E1-08	Mid. Output Voltage	V	16.1	16.1	16.1	16.1	40.2	57.5	40.2	57.5
E1-09	Min. Output Frequency	Hz	1.3	1.5	1.5	1.5	1.3	1.3	1.5	1.5
E1-10	Min. Output Voltage	V	8.0	8.0	8.0	8.0	6.9	8.0	6.9	8.0

1. The setting shown are for 208-240Vac Drives. The values will double for 380-480Vac Drives.
2. These default values are for V/F or V/F with PG control methods (A1-02 = 0 or 1)

Table 5.4 V/F Pattern for Drive Capacity G7U22P2 - 2045 for 208-240V Class (continued)

Parameter No.	Name	Unit	Factory Setting							
E1-03	V/F Pattern Selection	—	8	9	A	B	C	D	E	F & FF
E1-04	Max. Output Frequency	Hz	50.0	50.0	60.0	60.0	90.0	120.0	180.0	60.0
E1-05	Max. Output Voltage	V	230.0	230.0	230.0	230.0	230.0	230.0	230.0	230.0
E1-06	Base Frequency	Hz	50.0	50.0	60.0	60.0	60.0	60.0	60.0	60.0
E1-07	Mid. Output Frequency	V	2.5	2.5	3.0	3.0	3.0	3.0	3.0	3.0
E1-08	Mid. Output Voltage	V	20.7	26.4	20.7	26.4	16.1	16.1	16.1	16.1
E1-09	Min. Output Frequency	Hz	1.3	1.3	1.5	1.5	1.5	1.5	1.5	1.5
E1-10	Min. Output Voltage	V	10.3	12.6	10.3	14.9	8.0	8.0	8.0	8.0

1. For 400V class units, the voltage values are twice that of 200V class units.
2. These default values are for V/F or V/F with PG control methods (A1-02 = 0 or 1)

■208-240Vac Drives of 55 to 110 kW and 380-480Vac Drives of 55 to 300 kW

Table 5.5 V/F Pattern for Drive Capacity G7U2055 and higher for 208-240V Class

Parameter No.	Name	Unit	Factory Setting							
E1-03	V/F Pattern Selection	–	0	1	2	3	4	5	6	7
E1-04	Max. Output Frequency	Hz	50.0	60.0	60.0	72.0	50.0	50.0	60.0	60.0
E1-05	Max. Output Voltage	V	230.0	230.0	230.0	230.0	230.0	230.0	230.0	230.0
E1-06	Max. Voltage Frequency	Hz	50.0	60.0	50.0	60.0	50.0	50.0	60.0	60.0
E1-07	Mid. Output Frequency	V	2.5	3.0	3.0	3.0	25.0	25.0	30.0	30.0
E1-08	Mid. Output Voltage	V	13.8	13.8	13.8	13.8	40.2	57.5	40.2	57.5
E1-09	Min. Output Frequency	Hz	1.3	1.5	1.5	1.5	1.3	1.3	1.5	1.5
E1-10	Min. Output Voltage	V	6.9	6.9	6.9	6.9	5.7	6.9	5.7	6.9

1. The setting shown are for 208-240Vac Drives. The values will double for 380-480Vac Drives..
2. These default values are for V/F or V/F with PG control methods (A1-02 = 0 or 1)

Table 5.5 V/F Pattern for Drive Capacity G7U2055 and higher for 208-240V Class (continued)

Parameter No.	Name	Unit	Factory Setting							
E1-03	V/F Pattern Selection	–	8	9	A	B	C	D	E	F & FF
E1-04	Max. Output Frequency	Hz	50.0	50.0	60.0	60.0	90.0	120.0	180.0	60.0
E1-05	Max. Output Voltage	V	230.0	230.0	230.0	230.0	230.0	230.0	230.0	230.0
E1-06	Base Frequency	Hz	50.0	50.0	60.0	60.0	60.0	60.0	60.0	60.0
E1-07	Mid. Output Frequency	V	2.5	2.5	3.0	3.0	3.0	3.0	3.0	3.0
E1-08	Mid. Output Voltage	V	17.2	23.0	17.2	23.0	13.8	13.8	13.8	13.8
E1-09	Min. Output Frequency	Hz	1.3	1.3	1.5	1.5	1.5	1.5	1.5	1.5
E1-10	Min. Output Voltage	V	8.0	10.3	8.0	12.6	6.9	6.9	6.9	6.9

1. The setting shown are for 208-240Vac Drives. The values will double for 380-480Vac Drives.
2. These default values are for V/F or V/F with PG control methods (A1-02 = 0 or 1)

Table 5.6 lists the factory settings of V/F patterns when open loop vector or flux vector control method is selected (A1-02 = 2 or 3).

Table 5.6 V/F Pattern for 208-240V Class Drives

Parameter No.	Name	Unit	Factory Setting	
			Open Loop Vector	Flux Vector
E1-04	Max. Output Frequency	Hz	60.0	60.0
E1-05	Max. Output Voltage	V	230.0	230.0
E1-06	Base Frequency	Hz	60.0	60.0
E1-07	Mid. Output Frequency	V	3.0	0.0
E1-08	Mid. Output Voltage	V	12.6	0.0
E1-09	Min. Output Frequency	Hz	0.5	0.0
E1-10	Min. Output Voltage	V	2.3	0.0

1. The setting shown are for 208-240Vac Drives. The values will double for 380-480Vac Drives.
2. These default values are for open loop vector or flux vector control methods (A1-02 = 2 or 3)

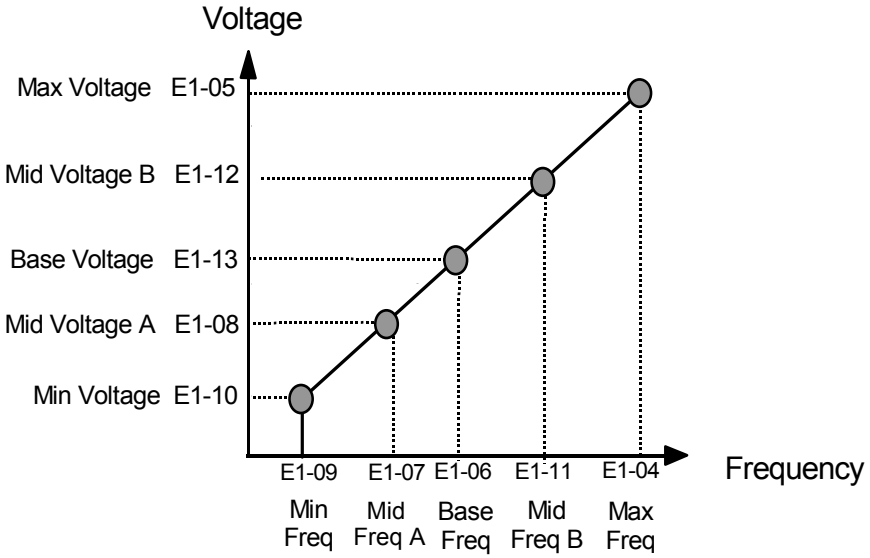

Fig 5.9 V/F Pattern Parameters

Parameters E1-07, E1-08, E1-10, E1-11, and E1-12 are accessible through the Programming Menu.

To set up a custom V/F pattern, program the points shown in the diagram below using parameters E1-04 through E1-13. Be sure that the following condition is true: E1-09 ≤ E1−07 < E1−06 ≤ E1−11 ≤ E1−04

◆ Factory Settings that Change with the Drive Capacity (o2-04)

The factory settings of the following user parameters will change if the Drive capacity (o2-04) is changed.

■208-240Vac Drives

Parameter Number	Name	Unit	Factory Setting								
-	Drive Capacity	kW	0.4	0.75	1.5	2.2	3.7	5.5	7.5	11	15
o2-04	kVA selection	-	0	1	2	3	4	5	6	7	8
b8-03	Energy Saving Control Filter Time Constant	s	0.50 (Open-loop vector control)								
b8-04	Energy Saving Coefficient Value	-	288.20	223.70	169.40	156.80	122.90	94.75	72.69	70.44	63.13
C6-02	Carrier Frequency Selection *1	-	6	6	6	6	6	6	6	6	6
C6-11	Carrier Frequency Selection for Open Loop Vector 2 *2	-	3	3	3	3	3	3	3	3	3
-	Carrier frequency selection upper limit	-	6	6	6	6	6	6	6	6	6
E2-01 (E4-01)	Motor Rated Current	A	1.90	3.30	6.20	8.50	14.00	19.60	26.60	39.7	53.0
E2-02 (E4-02)	Motor Rated Slip	Hz	2.90	2.50	2.60	2.90	2.73	1.50	1.30	1.70	1.60
E2-03 (E4-03)	Motor No-Load Current	A	1.20	1.80	2.80	3.00	4.50	5.10	8.00	11.2	15.2
E2-05 (E4-05)	Motor Line-to-Line Resistance	Ω	9.842	5.156	1.997	1.601	0.771	0.399	0.288	0.230	0.138
E2-06 (E4-06)	Motor Leakage Inductance	%	18.2	13.8	18.5	18.4	19.6	18.2	15.5	19.5	17.2
E2-10	Motor Iron Loss for Torque Compensation	W	14	26	53	77	112	172	262	245	272
L2-02	Momentary Power Loss Ride-thru Time	s	0.1	0.2	0.3	0.5	1.0	1.0	1.0	2.0	2.0
L2-03	Momentary Power Loss Minimum Base Block Time	s	0.2	0.3	0.4	0.5	0.6	0.7	0.8	0.9	1.0
L2-04	Momentary Power Loss Voltage Recovery Ramp Time	s	0.3	0.3	0.3	0.3	0.3	0.3	0.3	0.3	0.6
L8-02	Overheat Alarm Level	°C	95	95	100	95	95	95	95	90	100
n5-02	Motor Acceleration Time	s	0.178	0.142	0.166	0.145	0.154	0.168	0.175	0.265	0.244

Parameter Number	Name	Unit	Factory Setting								
-	Drive Capacity	kW	18.5	22	30	37	45	55	75	90	110
o2-04	kVA selection	-	9	A	B	C	D	E	F	10	11
b8-03	Energy Saving Control Filter Time Constant	s	0.50 (Open-loop vector control)					2.00 (Open-loop vector control)			
b8-04	Energy Saving Coefficient Value	-	57.87	51.79	46.27	38.16	35.78	31.35	23.10	20.65	18.12
C6-02	Carrier Frequency Selection *1	-	6	4	4	4	4	4	4	1	1
C6-11	Carrier Frequency Selection for Open Loop Vector 2 *2	-	3	3	3	3	3	3	3	1	1
-	Carrier frequency selection upper limit	-	6	6	4	4	4	4	4	1	1
E2-01 (E4-01)	Motor Rated Current	A	65.8	77.2	105.0	131.0	160.0	190.0	260.0	260.0	260.0
E2-02 (E4-02)	Motor Rated Slip	Hz	1.67	1.70	1.80	1.33	1.60	1.43	1.39	1.39	1.39
E2-03 (E4-03)	Motor No-Load Current	A	15.7	18.5	21.9	38.2	44.0	45.6	72.0	72.0	72.0
E2-05 (E4-05)	Motor Line-to-Line Resistance	Ω	0.101	0.079	0.064	0.039	0.030	0.022	0.023	0.023	0.023
E2-06 (E4-06)	Motor Leakage Inductance	%	20.1	19.5	20.8	18.8	20.2	20.5	20.0	20.0	20.0
E2-10	Motor Iron Loss for Torque Compensation	W	505	538	699	823	852	960	1200	1200	1200
L2-02	Momentary Power Loss Ride-thru Time	s	2.0	2.0	2.0	2.0	2.0	2.0	2.0	2.0	2.0
L2-03	Momentary Power Loss Minimum Base Block Time	s	1.0	1.1	1.1	1.2	1.2	1.3	1.5	1.7	1.7
L2-04	Momentary Power Loss Voltage Recovery Ramp Time	s	0.6	0.6	0.6	0.6	1.0	1.0	1.0	1.0	1.0
L8-02	Overheat Alarm Level	°C	90	90	95	100	100	110	100	95	95
n5-02	Motor Acceleration Time	s	0.317	0.355	0.323	0.320	0.387	0.317	0.533	0.592	0.646

Note Attach a Momentary Power Interruption Compensation Unit if compensation for power interruptions of up to 2.0 seconds is required for 208-240Vac Drives with outputs of 0.4 to 7.5 kW.

* 1. The initial settings for C6-02 are as follows: 0: Low noise PWM, 1: 2.0 kHz, 2: 5.0 kHz, 3: 8.0 kHz, 4: 10 kHz, 5: 12.5 kHz, and 6: 15 kHz. If the carrier frequency is set higher than the factory setting for Drives with outputs of 5.5 kW or more, the Drive rated current will need to be reduced.

* 2. The initial settings for C6-11 are as follows: 1: 2.0 kHz, 2: 4.0 kHz, 3: 6.0 kHz, 4: 8.0 kHz.

■380-480Vac Drives

Parameter Number	Name	Unit	Factory Setting									
-	Drive Capacity	kW	0.4	0.75	1.5	2.2	3.7	4.0	5.5	7.5	11	15
o2-04	kVA selection	-	20	21	22	23	24	25	26	27	28	29
b8-03	Energy Saving Control Filter Time Constant	s	0.50 (Open-loop vector control)									
b8-04	Energy Saving Coefficient Value	-	576.40	447.40	338.80	313.60	245.80	236.44	189.50	145.38	140.88	126.26
C6-02	Carrier Frequency Selection *1	-	3	3	3	3	3	3	3	3	3	3
C6-11	Carrier Frequency Selection for Open Loop Vector 2 *2	-	3	3	3	3	3	3	3	3	3	3
-	Carrier frequency selection upper limit	-	3	3	3	3	3	3	3	3	3	3
E2-01 (E4-01)	Motor Rated Current	A	1.00	1.60	3.10	4.20	7.00	7.00	9.80	13.30	19.9	26.5
E2-02 (E4-02)	Motor Rated Slip	Hz	2.90	2.60	2.50	3.00	2.70	2.70	1.50	1.30	1.70	1.60
E2-03 (E4-03)	Motor No-Load Current	A	0.60	0.80	1.40	1.50	2.30	2.30	2.60	4.00	5.6	7.6
E2-05 (E4-05)	Motor Line-to-Line Resistance	Ω	38.198	22.459	10.100	6.495	3.333	3.333	1.595	1.152	0.922	0.550
E2-06 (E4-06)	Motor Leakage Inductance	%	18.2	14.3	18.3	18.7	19.3	19.3	18.2	15.5	19.6	17.2
E2-10	Motor Iron Loss for Torque Compensation	W	14	26	53	77	130	130	193	263	385	440
L2-02	Momentary Power Loss Ride-thru Time	s	0.1	0.2	0.3	0.5	0.5	0.8	0.8	1.0	2.0	2.0
L2-03	Momentary Power Loss Minimum Base Block Time	s	0.2	0.3	0.4	0.5	0.6	0.6	0.7	0.8	0.9	1.0
L2-04	Momentary Power Loss Voltage Recovery Ramp Time	s	0.3	0.3	0.3	0.3	0.3	0.3	0.3	0.3	0.3	0.6
L8-02	Overheat Alarm Level	°C	95	95	95	95	95	95	95	90	95	95
n5-02	Motor Acceleration Time	s	0.178	0.142	0.166	0.145	0.154	0.154	0.168	0.175	0.265	0.244

Parameter Number	Name	Unit	Factory Setting				
-	Drive Capacity	kW	18.5	22	30	37	45
o2-04	kVA selection	-	2A	2B	2C	2D	2E
b8-03	Energy Saving Control Filter Time Constant	s	0.50 (Open-loop vector control)				
b8-04	Energy Saving Coefficient Value	-	115.74	103.58	92.54	76.32	71.56
C6-02	Carrier Frequency Selection *1	-	3	3	3	3	3
C6-11	Carrier Frequency Selection for Open Loop Vector 2 *2	-	3	3	3	3	3
-	Carrier frequency selection upper limit	-	3	3	3	3	3
E2-01 (E4-01)	Motor Rated Current	A	32.9	38.6	52.3	65.6	79.7
E2-02 (E4-02)	Motor Rated Slip	Hz	1.67	1.70	1.80	1.33	1.60
E2-03 (E4-03)	Motor No-Load Current	A	7.8	9.2	10.9	19.1	22.0
E2-05 (E4-05)	Motor Line-to-Line Resistance	Ω	0.403	0.316	0.269	0.155	0.122
E2-06 (E4-06)	Motor Leakage Inductance	%	20.1	23.5	20.7	18.8	19.9
E2-10	Motor Iron Loss for Torque Compensation	W	508	586	750	925	1125
L2-02	Momentary Power Loss Ride-thru Time	s	2.0	2.0	2.0	2.0	2.0
L2-03	Momentary Power Loss Minimum Base Block Time	s	1.0	1.1	1.1	1.2	1.2
L2-04	Momentary Power Loss Voltage Recovery Ramp Time	s	0.6	0.6	0.6	0.6	1.0
L8-02	Overheat Alarm Level	°C	95	95	95	95	95
n5-02	Motor Acceleration Time	s	0.317	0.355	0.323	0.320	0.387

Parameter Number	Name	Unit	Factory Setting					
-	Drive Capacity	kW	55	75	90	110	132	160
o2-04	kVA selection	-	2F	30	31	32	33	34
b8-03	Energy Saving Control Filter Time Constant	s	2.00 (Open-loop vector control)					
b8-04	Energy Saving Coefficient Value	-	67.20	46.20	38.91	36.23	32.79	30.13
C6-02	Carrier Frequency Selection *1	-	2	2	F	F	1	1
C6-11	Carrier Frequency Selection for Open Loop Vector 2 *2	-	2	2	1	1	1	1
-	Carrier frequency selection upper limit	-	5.0	5.0	3.0	3.0	2.0	2.0
E2-01 (E4-01)	Motor Rated Current	A	95.0	130.0	156.0	190.0	223.0	270.0
E2-02 (E4-02)	Motor Rated Slip	Hz	1.46	1.39	1.40	1.40	1.38	1.35
E2-03 (E4-03)	Motor No-Load Current	A	24.0	36.0	40.0	49.0	58.0	70.0
E2-05 (E4-05)	Motor Line-to-Line Resistance	Ω	0.088	0.092	0.056	0.046	0.035	0.029
E2-06 (E4-06)	Motor Leakage Inductance	%	20.0	20.0	20.0	20.0	20.0	20.0
E2-10	Motor Iron Loss for Torque Compensation	W	1260	1600	1760	2150	2350	2850
L2-02	Momentary Power Loss Ride-thru Time	s	2.0	2.0	2.0	2.0	2.0	2.0
L2-03	Momentary Power Loss Minimum Base Block Time	s	1.3	1.5	1.7	1.7	1.8	1.9
L2-04	Momentary Power Loss Voltage Recovery Ramp Time	s	1.0	1.0	1.0	1.0	1.0	1.0
L8-02	Overheat Alarm Level	°C	100	105	105	120	115	115
n5-02	Motor Acceleration Time	s	0.317	0.533	0.592	0.646	0.673	0.777

Note Drives with a capacity of 185 kW or more are under development.

* 1. The initial settings for C6-02 are as follows: 1: 2.0 kHz, 2: 5.0 kHz, 3: 8.0 kHz, 4: 10 kHz, 5: 12.5 kHz, 6: 15 kHz, and F: User-set (Initial setting for 400-V Drives with a capacity of 90-kW or 110-kW: 3 kHz.).

* 2. The initial settings for C6-11 are as follows: 1: 2.0 kHz, 2: 4.0 kHz, 3: 6.0 kHz, 4: 8.0 kHz.

6

Parameter Settings by Function

Frequency Reference 6-2
Run Command 6-7
Stopping Methods 6-9
Acceleration and Deceleration Characteristics 6-15
Adjusting Frequency References 6-24
Speed Limit (Frequency Reference Limit Function) 6-30
Improved Operating Efficiency 6-32
Machine Protection 6-39
Continuing Operation 6-57
Drive Protection 6-67
Input Terminal Functions 6-69
Monitor Parameters 6-79
Individual Functions 6-84
Digital Operator Functions 6-139
Options 6-151

Frequency Reference

This section explains how to input the frequency reference.

◆ Selecting the Frequency Reference Source

Set parameter b1-01 to select the frequency reference source.

■Related Parameters

Parameter Number	Name: Display	Description	Setting Range	Factory Setting	Change during Operation	Control Methods: V/f	V/f with PG	Open loop Vector 1	Flux Vector	Open Loop Vector 2
b1-01	Frequency Reference Selection Reference Source	Selects the frequency reference input source. 0: Operator - Digital preset speed U1-01 or d1-01 to d1-17. 1: Terminals - Analog input terminal A1 (or terminal A2 based on parameter H3-09). 2: Serial Com - Modbus RS-422/485 terminals R+, R-, S+, and S-. 3: Option PCB - Option board connected on 2CN. 4: Pulse Input (Terminal RP)	0 to 4	1	No	Q	Q	Q	Q	Q
H6-01	Terminal RP Pulse Train Input Function Selection Pulse Input Sel	Selects the function of pulse train terminal RP. 0: Frequency reference 1: PID feedback value 2: PID setpoint value	0 to 2	0	No	A	A	A	A	A
H6-02	Pulse Train Input Scaling Pulse In Scaling	Sets the number of pulses (in Hz) that is equal to the maximum output frequency E1-04.	1000 to 32000	1440Hz	Yes	A	A	A	A	A

■ Input the Reference Frequency from the Digital Operator

When b1-01 is set to 0, you can input the reference frequency from the Digital Operator.

Input the reference frequency from the Digital Operator's reference frequency setting display.

For details on setting the reference frequency, refer to *Chapter 3 Digital Operator and Modes*.

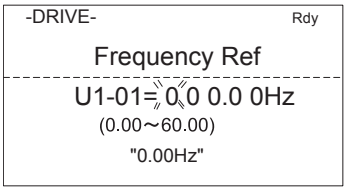

Fig 6.1 Frequency Setting Display

■Inputting the Frequency Reference Using Voltage (Analog Setting)

When b1-01 is set to 1, you can input the frequency reference from control circuit terminal A1 (voltage input), or control circuit terminal A2 (voltage or current input).

Inputting Master Speed Frequency Reference Only

When inputting a voltage for the master speed frequency reference, input the voltage to control circuit terminal A1.

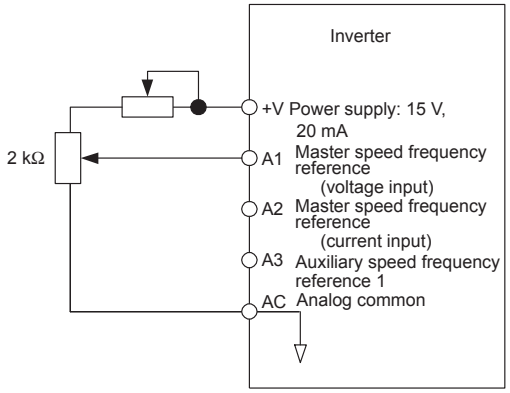

Fig 6.2 Voltage Input for Master Speed Frequency Reference

When inputting a current for the master speed frequency reference, input the current to control circuit terminal A2, input 0Vto terminal A1, set H3-08 (Multi-function analog input terminal A2 signal level selection) to 2 (current input), and set H3-09 (Multi-function analog input terminal A2 function selection) to 0 (add to terminal A1).

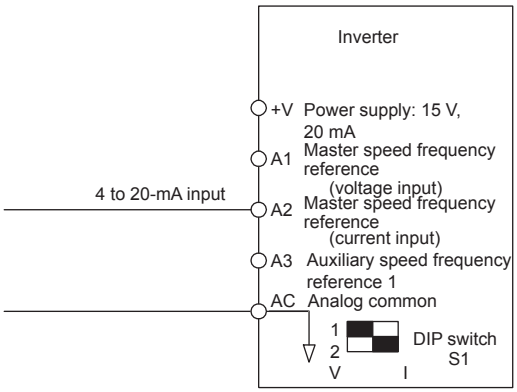

Fig 6.3 Current Input for Master Speed Frequency Reference

IMPORTANT

Turn ON pin 2 of DIP switch SW1 (toward I), the voltage/current switch, when inputting a current to terminal A2. Turn OFF pin 2 of DIP switch SW1 (toward V), the voltage/current switch, when inputting a voltage to terminal A2. Set H3-08 to the correct setting for the type of input signal being used.

Switch between 2 Step Speeds: Master/Auxiliary Speeds

When switching between the master and auxiliary speeds, connect the master speed frequency reference to control circuit terminal A1 or A2 and connect the auxiliary speed frequency reference to terminal A3. The reference on terminal A1 or A2 will be used for the Drive frequency reference when the multi-function input allocated to multi-speed command 1 is OFF and the reference on terminal A3 will be used when it is ON. When switching between the master and auxiliary speeds, set H3-05 (Multi-function analog input terminal A3) to 2 (auxiliary frequency reference, 2nd step analog) and set on of the multi-function input terminals to multi-step speed reference 1.

When inputting a current to terminal A2 for the master speed frequency reference, set H3-08 (Multi-function analog input terminal A2 signal level selection) to 2 (current input), and set H3-09 (Multi-function analog input terminal A2 function selection) to 0 (add to terminal A1).

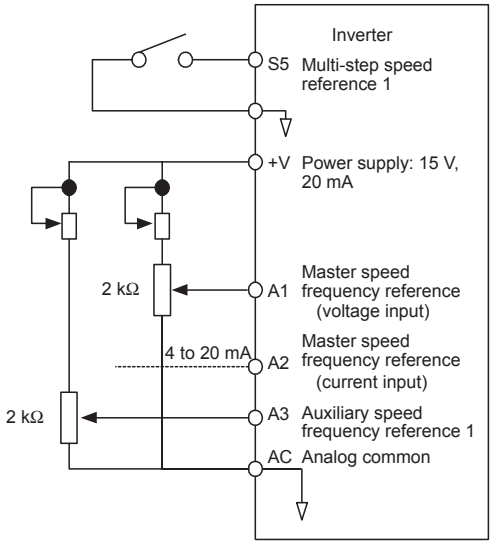

Fig 6.4 Switching between Master and Auxiliary Frequencies

■Setting Frequency Reference Using Pulse Train Signals

When b1-01 is set to 4, the pulse train input to control circuit terminal RP is used as the frequency reference.

Set H6-01 (Pulse Train Input Function Selection) to 0 (frequency reference), and then set the 100% reference pulse frequency to H6-02 (Pulse Train Input Scaling).

Pulse Input Specifications	
Low level voltage	0.0 to 0.8 V
High level voltage	3.5 to 13.2 V
Heavy duty	30 to 70%
Pulse frequency	0 to 32 kHz

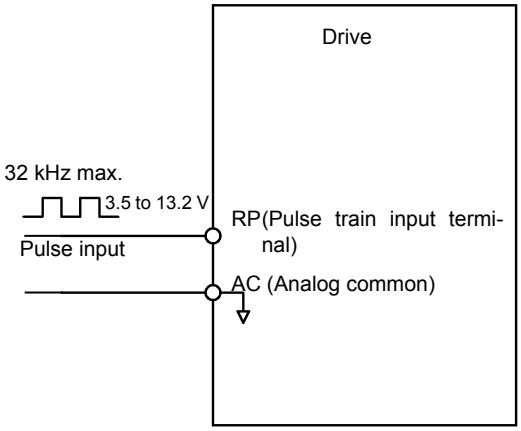

Fig 6.5 Frequency Reference Using Pulse Train Input

◆ Using Multi-Step Speed Operation

With Varispeed-G7 series Drives, you can change the speed to a maximum of 17 steps, using 16 frequency references, and one jog frequency reference.

The following example of a multi-function input terminal function shows a 9-step operation using multi-step references 1 to 3 and jog frequency selection functions.

■Related Parameters

To switch frequency references, set multi-step speed references 1 to 3 and the jog reference selection in the multi-function contact inputs.

Multi-function Contact Inputs (H1-01 to H1-10)

Terminal	Parameter Number	Set Value	Details
S5	H1-03	3	Multi-step speed reference 1 (Also used for master speed/auxiliary speed switching when multi-function analog input H3-09 is set to 2 (auxiliary frequency reference).)
S6	H1-04	4	Multi-step speed reference 2
S7	H1-05	5	Multi-step speed reference 3
S8	H1-06	6	Jog frequency selection (given priority over multi-step speed reference)

Combining Multi-Function References and Multi-Function Contact Inputs

You can change the selected frequency reference by combining the ON/OFF status of S4 to S7 (multi-function contact input terminals) to set multi-step speed references 1 to 3 and the jog frequency selection. The following table shows the possible combinations.

Speed	TerminalS5	TerminalS6	TerminalS7	TerminalS8	Selected Frequency
	Multi-step Speed Reference 1	Multi-step Speed Reference 2	Multi-step Speed Reference 3	Jog Frequency Selection	
1	OFF	OFF	OFF	OFF	Frequency reference 1 d1-01, master speed frequency
2	ON	OFF	OFF	OFF	Frequency reference 2 d1-02, auxiliary frequency 1
3	OFF	ON	OFF	OFF	Frequency reference 3 d1-03, auxiliary frequency 2
4	ON	ON	OFF	OFF	Frequency reference 4 d1-04
5	OFF	OFF	ON	OFF	Frequency reference 5 d1-05
6	ON	OFF	ON	OFF	Frequency reference 6 d1-06
7	OFF	ON	ON	OFF	Frequency reference 7 d1-07
8	ON	ON	ON	OFF	Frequency reference 8 d1-08
9	-	-	-	ON*	Jog frequency d1-17

* Terminal S8's jog frequency selection is given priority over multi-step speed references.

Setting Precautions

When setting analog inputs to step 1 to step 3, observe the following precautions.

- When setting terminal A1's analog input to step 1, set b1-01 to 1, and when setting d1-01 (Frequency Reference 1) to step 1, set b1-01 to 0.
- When setting terminal A2's analog input to step 2, set H3-09 to 2 (auxiliary frequency reference). When setting d1-02 (Frequency Reference 2) to step 2, set H3-09 to 1F (do not use analog inputs).
- When setting terminal A3's analog input to step 3, set H3-05 to 3 (auxiliary frequency reference 2). When setting d1-03(Frequency Reference 3) to step 3, set H3-05 to 1F (Analog input not used).

■Connection Example and Time Chart

The following diagram shows a time chart and control circuit terminal connection example during a 9-step operation.

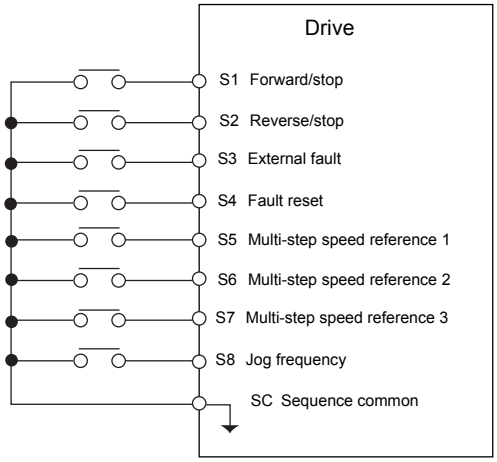

Fig 6.6 Control Circuit Terminal During 9-step Operation

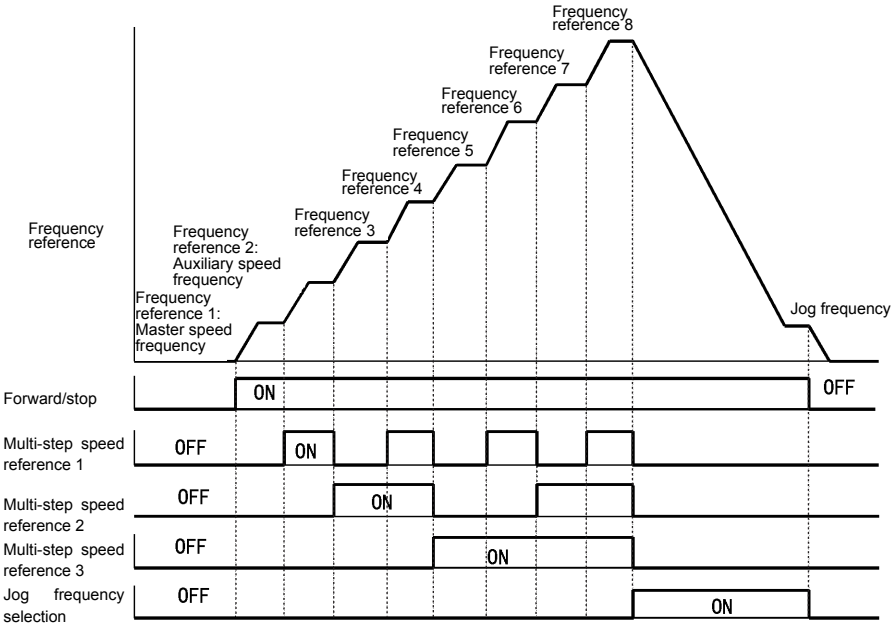

Fig 6.7 Multi-step speed reference/Jog Frequency Selection Time Chart

Run Command

This section explains input methods for the run command.

◆ Selecting the Run Command Source

Set parameter b1-02 to select the source for the run command.

■Related Parameters

Parameter Number	Name: Display	Description	Setting Range	Factory Setting	Change during Operation	Control Methods: V/f	V/f with PG	Open-loop Vector 1	Flux Vector	Open Loop Vector 2
b1-02	Run Command Selection / Run Source	Selects the run command input source. 0: Operator - RUN and STOP keys on Digital Operator. 1: Terminals - Contact closure on terminals S1 or S2. 2: Serial Com - Modbus RS-422/485 terminals R+, R-, S+, and S-. 3: Option PCB - Option board connected on 2CN.	0 to 3	1	No	Q	Q	Q	Q	Q

■Performing Operations Using a Digital Operator

When b1-02 is set to 0, you can perform Drive operations using the Digital Operator keys (RUN, STOP, JOG, and FWD/REV). For details on the Digital Operator, refer to *Chapter 3 Digital Operator and Modes*.

■Performing Operations Using Control Circuit Terminals

When b1-02 is set to 1, you can perform Drive operations using the control circuit terminals.

Performing Operations Using a 2-wire Sequence

The factory setting is set to a 2-wire sequence. When control circuit terminal S1 is set to ON, forward operation will be performed, and when S1 is turned OFF, the Drive will stop. In the same way, when control circuit terminal S2 is set to ON, reverse operation will be performed, and when S2 is turned OFF, the Drive will stop.

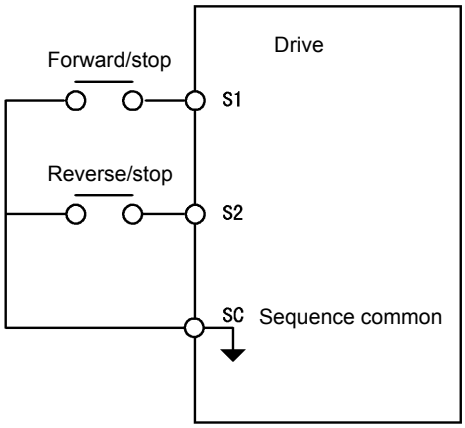

Fig 6.8 2-wire Sequence Wiring Example

Performing Operations Using a 3-wire Sequence

When any parameter from H1-01 to H1-10 (multi-function contact input terminals S3 to S12) is set to 0, terminals S1 and S2 are used for a 3-wire sequence, and the multi-function input terminal that has been set functions as a forward/reverse run command terminal.

When the Drive is initialized for 3-wire sequence control with A1-03, multi-function input 3 becomes the input terminal for the forward/reverse run command.

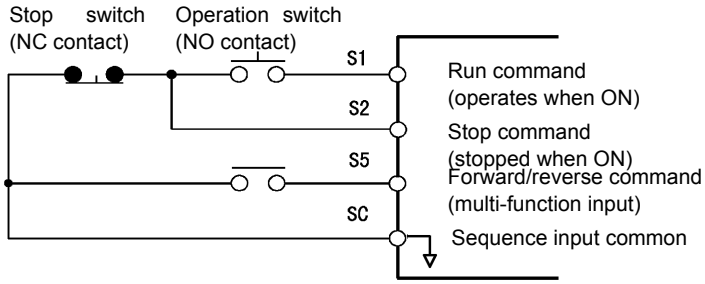

Fig 6.9 3-wire Sequence Wiring Example

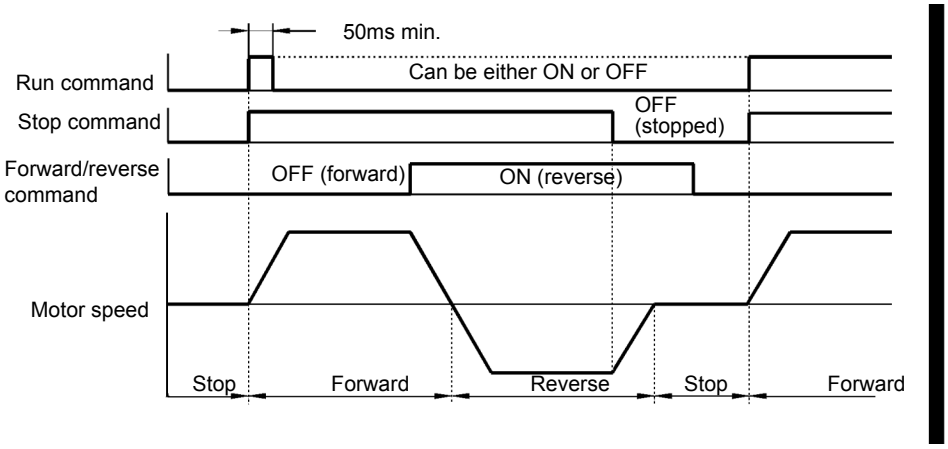

Fig 6.10 Three-wire Sequence Time Chart

INFO

Use a sequence that turns ON terminal S1 for 50ms or longer for the run command. This will make the run command self-holding in the Drive.

Stopping Methods

This section explains methods of stopping the Drive.

◆ Selecting the Stopping Method when a Stop Command is Sent

There are four methods of stopping the Drive when a stop command is sent:

- Deceleration to stop
- Coast to stop
- DC braking stop
- Coast to stop with timer

Set parameter b1-03 to select the Drive stopping method. A DC braking stop and coasting to a stop with a timer cannot be set for flux vector control.

■Related Parameters

Parameter Number	Name / Display	Description	Setting Range	Factory Setting	Change during Operation	Control Methods: V/f	V/f with PG	Open-Loop Vector 1	Flux Vector	Open Loop Vector 2
b1-03	Stopping Method Selection / Stopping Method	Selects the stopping method when the run command is removed. 0: Ramp to Stop 1: Coast to Stop 2: DC Injection to Stop 3: Coast with Timer (A new run command is ignored if received before the timer expires).	0 to 3*	0	No	Q	Q	Q	Q	Q
b1-05	Minimum Output Frequency (E1-09) or Less Operation Selection / Zero-Speed Oper	Operation method when frequency reference is less than minimum output frequency set in E1-09. 0: Operates according to frequency reference (E1-09 is disabled). 1: Output shuts off (coast to stop if less than E1-09). 2: Operates according to E1-09 (frequency reference set to E1-09). 3: Zero speed (frequency reference becomes zero when less than E1-09).	0 to 3	0	No	No	No	No	A	No
b2-01	DC Injection Braking Start Frequency / DCInj Start Freq	Sets the frequency at which DC injection braking starts when ramp to stop (b1-03 = 0) is selected. If b2-01< E1-09, DC Injection braking starts at E1-09. Note: Zero Speed restrictions are active in Flux Vector Mode.	0.0 to 10.0	0.5Hz	No	A	A	A	A	A

Parameter Number	Name / Display	Description	Setting Range	Factory Setting	Change during Operation	Control Methods: V/f	V/f with PG	Open-Loop Vector 1	Flux Vector	Open Loop Vector 2
b2-02	DC Injection Braking Current / DCInj Current	Sets the DC injection braking current as a percentage of the Drive rated current. Note: The DC excitation current is determined by the setting in E2-03 when operating in flux loop vector control mode	0 to 100	50%	No	A	A	A	No	No
b2-03	DC Injection Braking Time/DC Excitation Time at Start / DCInj Time@Start	Sets the time of DC injection braking at start in units of 0.01 seconds.	0.00 to 10.00	0.00sec	No	A	A	A	A	A
b2-04	DC Injection Braking Time at Stop / DCInj Time@Stop	Sets the time length of DC injection braking at stop in units of 0.01 seconds. 1: When b1-03 = 2, actual DC Injection time is calculated as follows: (b2-04) x 10 x (OutputFreq) / (E1-04) 2: When b1-03 = 0, this parameter determines the amount of time DC Injection is applied to the motor at the end of the decel ramp. 3: This should be set to a minimum of 0.50 seconds when using HSB. This will activate DC injection during the final portion of HSB and help ensure that the motor stops completely.	0.00 to 10.00	0.50sec	No	A	A	A	A	A

* The setting range is 0 or 1 for flux vector control and open-loop vector control 2.

■Deceleration to Stop

If the stop command is input (i.e., the run command is turned OFF) when b1-03 is set to 0, the motor decelerates to a stop according to the deceleration time that has been set. (Factory setting: C1-02 (Deceleration Time 1))

If the output frequency when decelerating to a stop falls below b2-01, the DC injection brake will be applied using the DC current set in b2-02 only for the time set in b2-04.

For deceleration time settings, refer to *page 6-16 Setting Acceleration and Deceleration Times*.

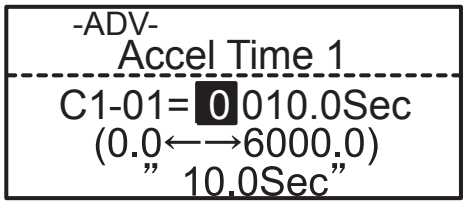

Fig 6.11 Deceleration to Stop

The operation after stopping depends on the setting of b1-05 when flux vector control is selected (A1-02 = 3).

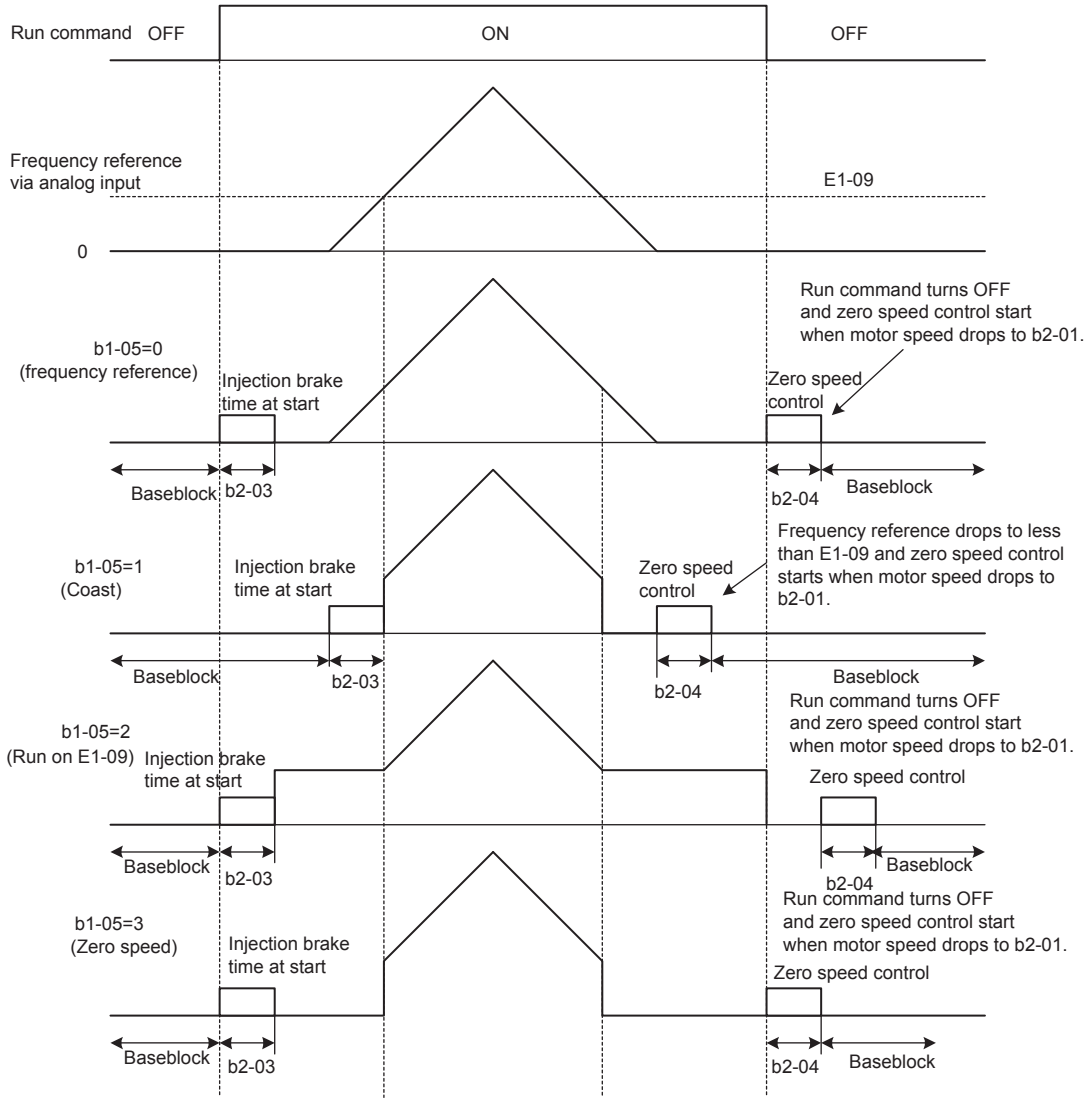

Fig 6.12 Deceleration to Stop (for Flux Vector Control)

■Coast to Stop

If the stop command is input (i.e., the run command is turned OFF) when b1-03 is set to 1, the Drive output voltage is interrupted. The motor coasts to a stop at the deceleration rate that counterbalances damage to the machine and inertia including the load.

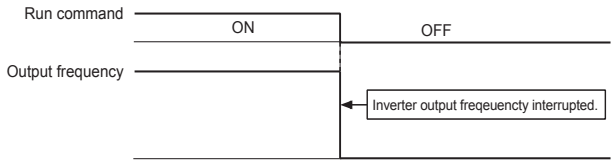

Fig 6.13 Coast to Stop

INFO

After the stop command is input, run commands are ignored until the Minimum Baseblock Time (L2-03) has elapsed.

■DC Braking Stop

If the stop command is input (i.e., the run command is turned OFF) when b1-03 is set to 2, a wait is made for the time set in L2-03 (Minimum Baseblock (BB) Time) and then the DC injection brake current set in b2-02 is sent to the motor to apply a DC injection brake to stop the motor. The DC injection brake time is determined by the set value in b2-04 and the output frequency when the stop command is input.

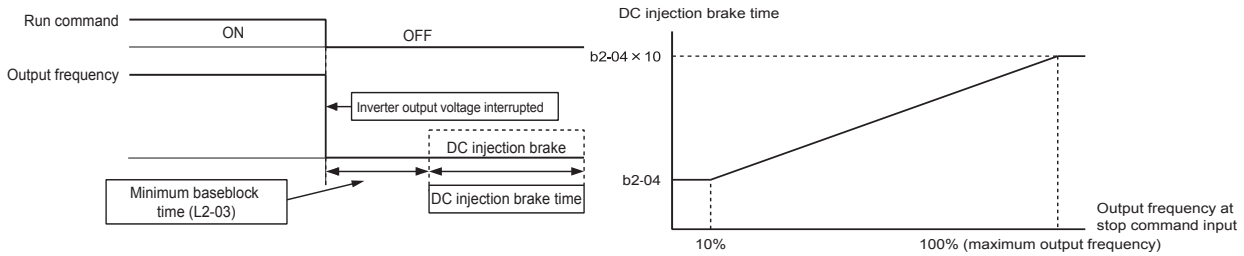

Fig 6.14 DC Injection Braking (DB) Stop

INFO

Lengthen the Minimum Baseblock Time (L2-03) when an overcurrent (OC) occurs during stopping.

■Coast to Stop with Timer

If the stop command is input (i.e., the run command is turned OFF) when b1-03 is set to 3, the Drive output is interrupted to coast the motor to a stop. After the stop command is input, run commands are ignored until the time T has elapsed. The time T depends upon the output frequency when the stop command is input and the deceleration time.

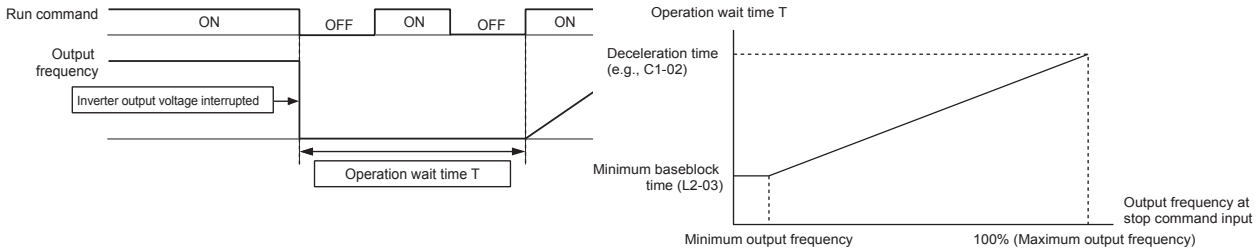

Fig 6.15 Coast to Stop with Timer

◆ Using the DC Injection Brake

Set parameter b2-03 to apply the DC injection brake voltage to the motor while it is coasting to a stop, to stop the motor and then restart it.

Set b2-03 to 0 to disable the DC injection brake at start.

Set the DC injection brake current using b2-02. DC injection braking is used at startup for flux vector control with the current set in E2-03 (Motor no-load current).

■Related Parameters

Parameter Number	Name: Display	Description	Setting Range	Factory Setting	Change during Operation	Control Methods: V/f	V/f with PG	Open Loop Vector 1	Flux Vector	Open Loop Vector 2
b2-02	DC Injection Braking Current DCInj Current	Sets the DC injection braking current as a percentage of the Drive rated current. Note: The DC excitation current is determined by the setting in E2-03 when operating in flux loop vector control mode.	0 to 100	50%	No	A	A	A	No	No
b2-03	DC Injection Braking Time/ DC Excitation Time at Start DCInj Time@Start	Sets the time of DC injection braking at start in units of 0.01 seconds.	0.00 to 10.00	0.00sec	No	A	A	A	A	A

■Inputting the DC Injection Brake Command from Control Circuit Terminals

If you set a multi-function contact input terminal (H1-□□) to 60 (DC injection brake command), you can apply the DC injection brake to the motor by turning ON the terminal for which the DC injection brake command has been set when the Drive is being stopped. DC injection braking is used at startup for flux vector control.

The time chart for the DC injection brake is shown below.

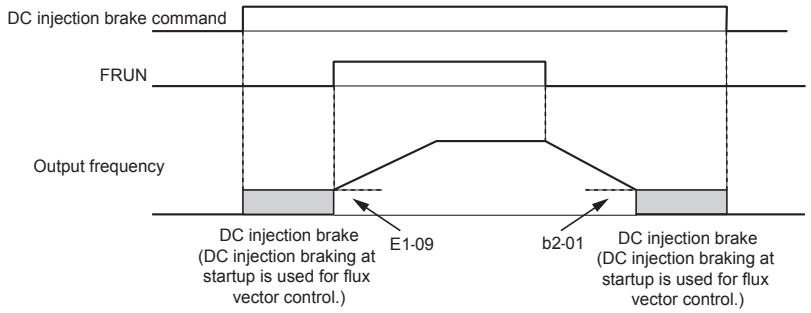

If you input the DC injection brake command from an external terminal, or if the run command and jog command are input, the DC injection brake will be disabled, and operation will resume.

Fig 6.16 DC Injection Brake Time Chart

■Changing the DC Injection Brake Current Using an Analog Input

If you set H3-09 (Multi-function Analog Input Terminal A2 Function Selection) or H3-05 (Multi-function Analog Input Terminal A3 Function Selection) to 6 (DC injection brake current), you can change the DC injection brake current level using the analog input.

At 10Vinput (voltage) or 20mA input (current), 100% of the Drive rated current will be applied.

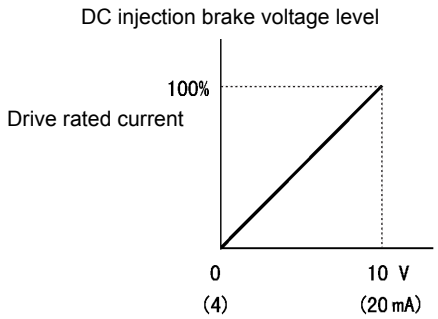

Fig 6.17 DC Injection Brake Current Using an Analog Input

◆ Using an Emergency Stop

Set a multi-function input terminal (H1-□□) to 15 or 17 (emergency stop) to decelerate to a stop at the deceleration time set in C1-09. If inputting the emergency stop with an NO contact, set the multi-function input terminal (H1-□□) to 15, and if inputting the emergency stop with an NC contact, set the multi-function input terminal (H1-□□) to 17.

After the emergency stop command has been input, operation cannot be restarted until the Drive has stopped. To cancel the emergency stop, turn OFF the run command and emergency stop command.

■Related parameters

Parameter Number	Name	Description	Setting Range	Factory Setting	Change during Operation	Control Methods				
	Display					V/f	V/f with PG	Open Loop Vector 1	Flux Vector	Open Loop Vector 2
C1-09	Fast Stop Time Fast Stop Time	Sets the time to decelerate from maximum frequency to zero for the multi-function input "Fast Stop" function. Note: this parameter is also used by selecting "Fast Stop" as a Stop Method when a fault is detected.	0.0 to 6000.0*	10.0sec	No	A	A	A	A	A

* The setting range for accel/decel time will differ depending on C1-10 (Accel/Decel Time Units). If C1-10 is set to "0", then the setting range will change to 0.00sec to 600.00sec.

Acceleration and Deceleration Characteristics

This section explains the acceleration and deceleration characteristics of the Drive.

◆ Setting Acceleration and Deceleration Times

Acceleration time indicates the time taken for the output frequency to climb from 0% to 100%. Deceleration time indicates the time taken for the output frequency to reduce to 0%. The factory setting of the acceleration time is C1-01, and the factory setting of the deceleration time is C1-02.

■Related Parameters

Parameter Number	Name: Display	Description	Setting Range	Factory Setting	Change during Operation	Control Methods: V/f	V/f with PG	Open Loop Vector 1	Flux Vector	Open Loop Vector 2
C1-01	Acceleration Time 1 Accel Time 1	Sets the time to accelerate from zero to maximum frequency.	0.0 to 6000.0*	10.0sec	Yes	Q	Q	Q	Q	Q
C1-02	Deceleration Time 1 Decel Time 1	Sets the time to decelerate from maximum frequency to zero.			Yes	Q	Q	Q	Q	Q
C1-03	Acceleration Time 2 Accel Time 2	Sets the time to accelerate from zero to maximum frequency when selected via a multi-function input.			Yes	A	A	A	A	A
C1-04	Deceleration Time 2 Decel Time 2	Sets the time to decelerate from maximum frequency to zero when selected via a multi-function input.			Yes	A	A	A	A	A
C1-05	Acceleration Time 3 Accel Time 3	Sets the time to accelerate from zero to maximum frequency when selected via a multi-function input.			No	A	A	A	A	A
C1-06	Deceleration Time 3 Decel Time 3	Sets the time to decelerate from maximum frequency to zero when selected via a multi-function input.			No	A	A	A	A	A
C1-07	Acceleration Time 4 Accel Time 4	Sets the time to accelerate from zero to maximum frequency when selected via a multi-function input.			No	A	A	A	A	A
C1-08	Deceleration Time 4 Decel Time 4	Sets the time to decelerate from maximum frequency to zero when selected via a multi-function input.			No	A	A	A	A	A
C1-10	Accel/Decel Time Setting Units Acc/Dec Units	Sets the setting resolution of C1-01 to C1-09 0: 0.01sec (0.00 to 600.00sec) 1: 0.1sec (0.0 to 6000.0sec)	0 or 1	1	No	A	A	A	A	A

Parameter Number	Name: Display	Description	Setting Range	Factory Setting	Change during Operation	Control Methods: V/f	V/f with PG	Open Loop Vector 1	Flux Vector	Open Loop Vector 2
C1-11	Accel/Decel Switch Frequency Acc/Dec SW Freq	Sets the frequency for automatic switching of accel / decel times. Fout < C1-11: Accel/Decel Time 4 Fout ≥ C1-11: Accel/Decel Time 1 Multi-function inputs "Multi-Acc/Dec 1" and "Multi-Acc/Dec 2" have priority over C1-11. Note: with Multi-Function Input, Accel/Decel Time 1 and 2 will take precedence.	0.0 to 400.0 *1	0.0Hz	No	A	A	A	A	A
C2-01	S-Curve Characteristic at Accel Start SCrv Acc @ Start	S-curve is used to further soften the starting and stopping ramp. The longer the S-curve time, the softer the starting and stopping ramp. Note: With this setting, accel/decel times will be exactly half of the start and finish times of the S-curve characteristic time. 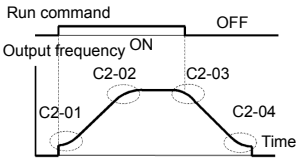	0.00 to 2.50	0.20sec	No	A	A	A	A	A
C2-02	S-Curve Characteristic at Accel End SCrv Acc @ End		0.00 to 2.50	0.20sec	No	A	A	A	A	A
C2-03	S-Curve Characteristic at Decel Start SCrv Dec @ Start		0.00 to 2.50	0.20sec	No	A	A	A	A	A
C2-04	S-Curve Characteristic at Decel End SCrv Dec @ End		0.00 to 2.50	0.00sec	No	A	A	A	A	A

* The setting range for accel/decel time will differ depending on C1-10 (Accel/Decel Time Units). If C1-10 is set to "0", then the setting range will change to 0.00sec to 600.00sec.

* 1. Varies by Duty Rating

■Setting Acceleration and Deceleration Time Units

Set the acceleration/deceleration time units using C1-10. Parameter C1-10 is set to 1 at the factory.

Set value	Details
0	The acceleration/deceleration time settings range is 0.00 to 600.00 in units of 0.01 s.
1	The acceleration/deceleration time settings range is 0.00 to 600.00 in units of 0.1 s.

■Switching Acceleration and Deceleration Time Using Multi-Function Input Terminal Commands

Using the Drive, you can set four acceleration times and four deceleration times. When the multi-function input terminals (H1-□□) are set to 7 (acceleration/deceleration time selection 1) and 1A (acceleration/deceleration time selection 2), you can switch the acceleration/deceleration time even during operation by combining the ON/OFF status of the terminals.

The following table shows the acceleration/deceleration time switching combinations.

Acceleration/Deceleration Time Selection 1 Terminal	Acceleration/Deceleration Time Selection 2 Terminal	Acceleration Time	Deceleration Time
OFF	OFF	C1-01	C1-02
ON	OFF	C1-03	C1-04
OFF	ON	C1-05	C1-06
ON	ON	C1-07	C1-08

■Switching Acceleration and Deceleration Time Automatically

Use this setting when you want to switch acceleration/deceleration time automatically using the set frequency.

When the output frequency reaches the set value in C1-11, the Drive switches the acceleration/deceleration time automatically as shown in the following diagram.

Set C1-11 to a value other than 0.0Hz. If C1-11 is set to 0.0Hz, the function will be disabled.

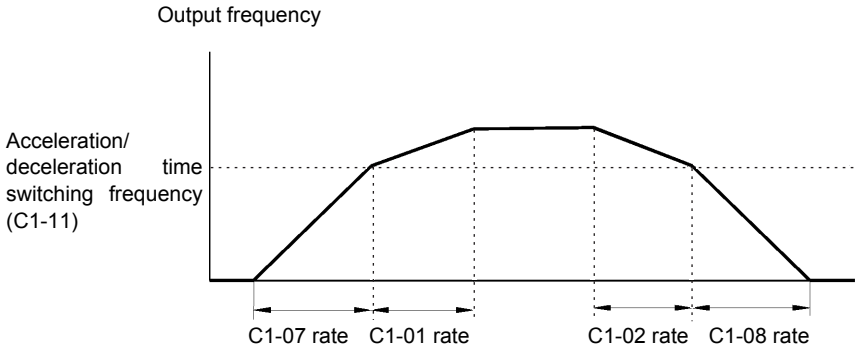

When output frequency ≥ C1-11, acceleration and deceleration are performed using Acceleration/deceleration Time 1 (C1-01, C1-02).

When output frequency < C1-11, acceleration and deceleration are performed using Acceleration/deceleration Time 4 (C1-07, C1-08).

Fig 6.18 Acceleration/deceleration Time Switching Frequency

■Adjusting Acceleration and Deceleration Time Using an Analog Input

If you set H3-09 (Multi-function Analog Input Terminal A2 Function Selection) or H3-05 (Multi-function Analog Input Terminal A3 Function Selection) to 5 (acceleration/deceleration time gain), you can adjust the acceleration/deceleration time using terminal A2's input voltage.

The Drive's acceleration time when the acceleration time has been set in C1-01 is as follows:

Acceleration time = C1-01 set value x acceleration/deceleration time gain

Acceleration/deceleration time gain (set value: 5)

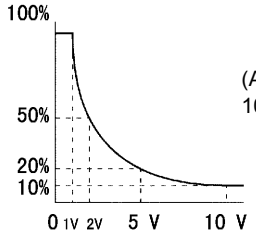

(Acceleration/deceleration gain from 1 to 10 V) = 10 V/Input voltage (V) x 10 (%)

Fig 6.19 Acceleration/Deceleration Time Gain Using an Analog Input

■Entering S-curve Characteristics in the Acceleration and Deceleration Time

By performing acceleration and deceleration using an S-curve pattern, you can reduce shock when starting and stopping the machine.

Using the Drive, you can set an S-curve characteristic time for each of the following: Acceleration start time, deceleration start time, acceleration end time, and deceleration end time.

INFO

Set the S-curve characteristic time to lengthen acceleration/deceleration time as follows:

Acceleration time = Selected acceleration time + (Acceleration start time S-curve characteristic time + Acceleration end time S-curve characteristic time) / 2

Deceleration time = Selected deceleration time + (Deceleration start time S-curve characteristic time + Deceleration end time S-curve characteristic time) / 2

Setting Example

The S-curve characteristic when switching operation (forward/reverse) is shown in the following diagram.

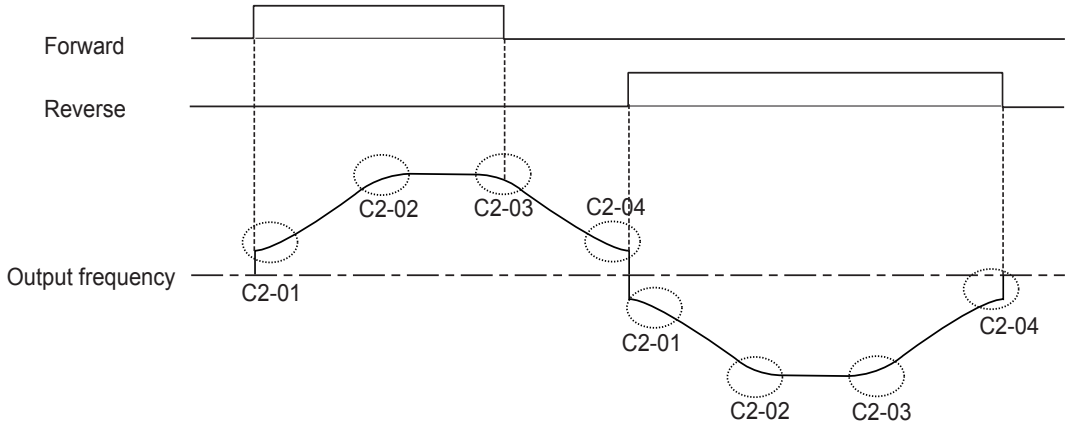

Fig 6.20 S-curve Characteristic during Operation Switching

◆ Accelerating and Decelerating Heavy Loads (Dwell Function)

The dwell function stores the output frequency when starting or stopping heavy loads. By temporarily storing the output frequency, you can prevent the motor from stalling. When using the dwell function, you must select a deceleration stop. Set b1-03 (Stopping Method Selection) to 0.

■Related Parameters

Parameter Number	Name: Display	Description	Setting Range	Factory Setting	Change during Operation	Control Methods: V/f	V/f with PG	Open Loop Vector 1	Flux Vector	Open Loop Vector 2
b6-01	Dwell Reference at Start / Dwell Ref @Start	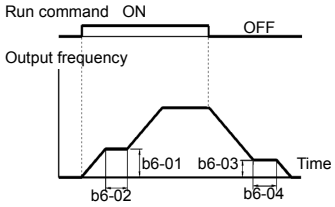 The dwell function is used to temporarily hold the frequency when driving a motor with heavy load.	0.0 to 400.0	0.0Hz	No	A	A	A	A	A
b6-02	Dwell Time at Start / Dwell Time@Start		0.0 to 10.0	0.0sec	No	A	A	A	A	A
b6-03	Dwell Frequency at Stop / Dwell Ref @Stop		0.0 to 400.0	0.0Hz	No	A	A	A	A	A
b6-04	Dwell Time at Stop / Dwell Time @Stop		0.0 to 10.0	0.0sec	No	A	A	A	A	A

◆ Preventing the Motor from Stalling During Acceleration (Stall Prevention During Acceleration Function)

The Stall Prevention During Acceleration function prevents the motor from stalling if a heavy load is placed on the motor, or sudden rapid acceleration is performed.

If you set L3-01 to 1 (enabled) and the Drive output current exceeds the -15% level of the set value in L3-02, the acceleration rate will begin to slow down. When L3-02 is exceeded, acceleration will stop.

If you set L3-01 to 2 (optimum adjustment), the motor current accelerates to the value set in L3-02. With this setting, the acceleration time setting is ignored.

■Related Parameters

Parameter Number	Name	Description	Setting Range	Factory Setting	Change during Operation	Control Methods				
	Display					V/f	V/f with PG	Open Loop Vector 1	Flux Vector	Open Loop Vector 2
L3-01	Stall Prevention Selection During Accel StallP Accel Sel	Selects the stall prevention method used to prevent excessive current during acceleration. 0: Disabled - Motor accelerates at active acceleration rate. The motor may stall if load is too heavy or accel time is too short. 1: General Purpose - When output current exceeds L3-02 level, acceleration stops. Acceleration will continue when the output current level falls below the L3-02 level. 2: Intelligent - The active acceleration rate is ignored. Acceleration is completed in the shortest amount of time without exceeding the current value set in L3-02.	0 to 2	1	No	A	A	A	No	No
L3-02	Stall Prevention Level During Acceleration StallP Accel Lvl	This function is enabled when L3-01 is "1" or "2". Drive rated current is 100%. Decrease the set value if stalling or excessive current occurs with factory setting.	0 to 200	150%	No	A	A	A	No	No
L3-03	Stall Prevention Limit During Acceleration StallP CHP Lvl	Sets the lower limit for stall prevention during acceleration, as a percentage of the Drive's rated current, when operation is in the frequency range above E1-06 (constant power region).	0 to 100	50%	No	A	A	A	No	No

■Time Chart

The following figure shows the frequency characteristics when L3-01 is set to 1.

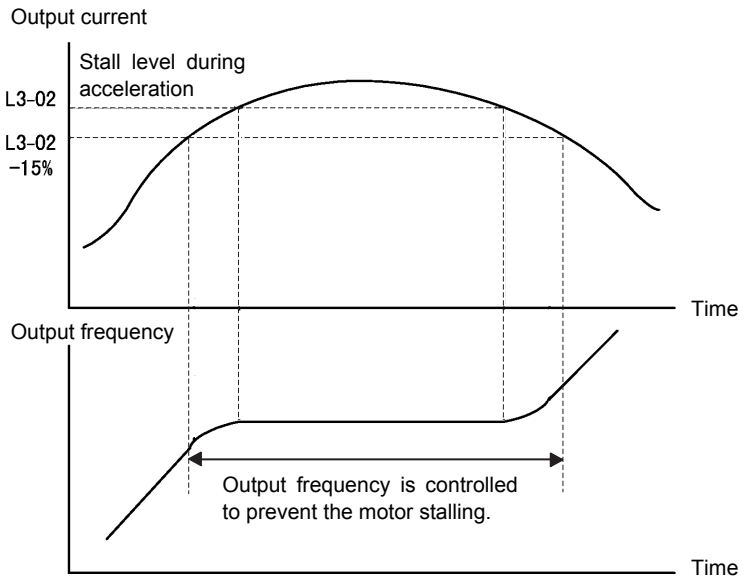

Fig 6.21 Time Chart for Stall Prevention During Acceleration

■Setting Precautions

- If the motor capacity is small compared to the Drive capacity, or if the motor is operated using the factory settings, resulting in the motor stalling, lower the set value of L3-02.
- If using the motor in the constant output range, L3-02 will be automatically lowered to prevent stalling. L3-03 is the limit value to prevent the stall prevention level in the constant output range from being reduced more than necessary.
- Set the parameters as a percent taking the drive rated voltage to be 100%.

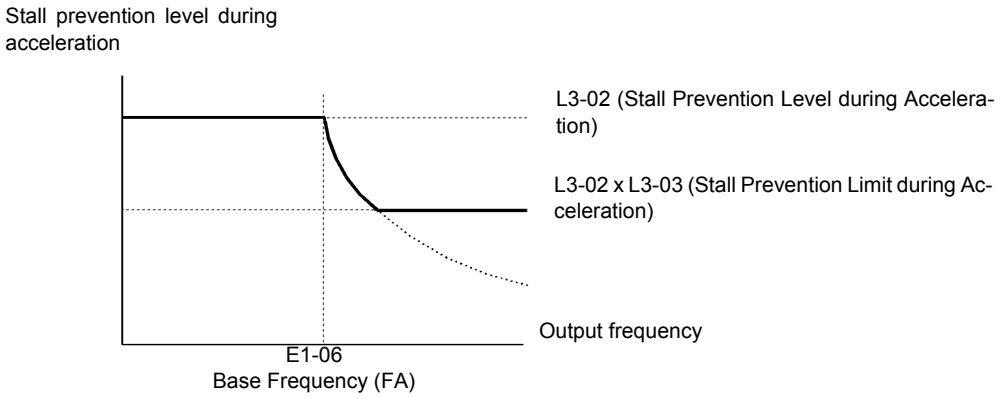

Fig 6.22 Stall Prevention Level and Limit During Acceleration

◆ Preventing Overvoltage During Deceleration (Stall Prevention During Deceleration Function)

The Stall Prevention During Deceleration function makes the rate of deceleration more gentle to suppress increases in DC bus voltage when the DC bus voltage exceeds the set value during motor deceleration.

This function automatically lengthens the deceleration time with respect to the bus voltage, even if the deceleration time has been set to a considerably small value.

If L3-04 is set to 1 or 2, when the main circuit DC voltage approaches the stall prevention level during deceleration, deceleration stops, and when deceleration falls below the level, is restarted. Using this operation, deceleration time is automatically lengthened. If L3-04 is set to 1, deceleration time returns to the set value, and if L3-04 is set to 2, deceleration is automatically adjusted to a faster deceleration time within the range of the stall prevention level during deceleration.

■Related Parameters

Parameter Number	Name	Description	Setting Range	Factory Setting	Change during Operation	Control Methods				
	Display					V/f	V/f with PG	Open Loop Vector 1	Flux Vector	Open Loop Vector 2
L3-04	Stall Prevention Selection During Deceleration StallP Decel Sel	When using a braking resistor, use setting "0". Setting "3" is used in specific applications. 0: Disabled - The Drive decelerates at the active deceleration rate. If the load is too large or the deceleration time is too short, an OV fault may occur. 1: General Purpose - The Drive decelerates at the active deceleration rate, but if the main circuit DC bus voltage reaches the stall prevention level (380/760Vdc), deceleration will stop. Deceleration will continue once the DC bus level drops below the stall prevention level. 2: Intelligent - The active deceleration rate is ignored and the Drive decelerates as fast as possible w/o hitting OV fault level. Range: C1-02 / 10. 3: Stall Prevention w/ Braking Resistor - Stall prevention during deceleration is enabled in coordination with dynamic braking.	0 to 3*	1	No	Q	Q	Q	Q	Q

* In Flux Vector or in Open Loop Vector 2, the setting range becomes 0 to 2.

■Setting Example

An example of stall prevention during deceleration when L3-04 is set to 1 as shown below.

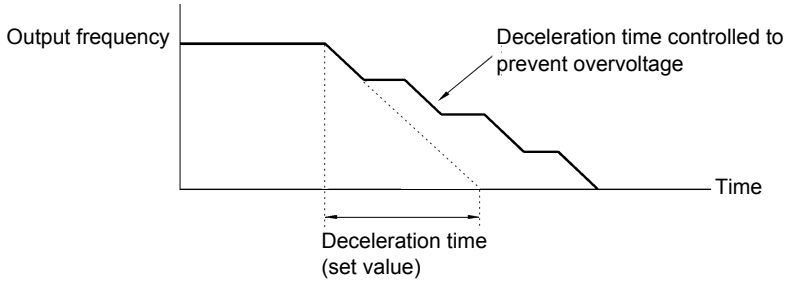

Fig 6.23 Stall Prevention During Deceleration Operation

■Setting Precautions

- The stall prevention level during deceleration differs depending on the Drive capacity. Refer to the following table for details.

Drive Capacity		Stall Prevention Level during Deceleration (V)
200-240Vclass		380
380-480Vclass	E1-01 ≥ 400 V	760
	E1-01 < 400 V	660

- When using the braking option (braking resistor, Braking Resistor Units, and Braking Units), be sure to set parameter L3-04 to 0 or 3.
- To decelerate at a shorter time than the deceleration time set when L3-04 is set to 0 with the braking option enabled, set L3-04 to 3.
- The setting of L3-04 is ignored for flux vector control or open-loop vector control 2.

Adjusting Frequency References

This section explains methods of adjusting frequency references.

◆ Adjusting Analog Frequency References

Gain and bias are among the parameters used to adjust analog inputs.

■Related Parameters

Parameter Number	Name: Display	Description	Setting Range	Factory Setting	Change during Operation	Control Methods: V/f	V/f with PG	Open Loop Vector 1	Flux Vector	Open Loop Vector 2
H3-01	Terminal A1 Signal Level Selection Term A1 Lvl Sel	Sets the signal level of terminal A1. 0: 0 to 10Vdc 1: -10 to +10Vdc [11-bit plus polarity sign]	0 or 1	0	No	A	A	A	A	A
H3-02	Terminal A1 Gain Setting Terminal A1 Gain	Sets the output level when 10V is input, as a percentage of the maximum output frequency (E1-04).	0.0 to 1000.0	100.0%	Yes	A	A	A	A	A
H3-03	Terminal A1 Bias Setting Terminal A1 Bias	Sets the output level when 0V is input, as a percentage of the maximum output frequency (E1-04).	-100.0 to 100.0	0.0%	Yes	A	A	A	A	A
H3-04	Terminal A3 Signal Level Selection Term A3 Signal	Sets the signal level of terminal A3. 0: 0 to 10Vdc 1: -10 to +10Vdc	0 or 1	0	No	A	A	A	A	A
H3-05	Terminal A3 Function Selection Terminal A3 Sel	[Refer to table "H3-05, H3-09 Settings" for multi-function selections]	0 to 1F	2	No	A	A	A	A	A
H3-06	Terminal A3 Gain Setting Terminal A3 Gain	Sets the output level when 10V is input.	0.0 to 1000.0	100.0%	Yes	A	A	A	A	A
H3-07	Terminal A3 Bias Setting Terminal A3 Bias	Sets the frequency reference when 0V is input.	-100.0 to 100.0	0.0%	Yes	A	A	A	A	A

Parameter Number	Name: Display	Description	Setting Range	Factory Setting	Change during Operation	Control Methods: V/f	V/f with PG	Open Loop Vector 1	Flux Vector	Open Loop Vector 2
H3-08	Terminal A2 Signal Level Selection Term A2 Signal	Selects the signal level of terminal A2. 0: 0 to 10Vdc (switch S1-2 must be in the OFF position). 1: -10 to +10Vdc (switch S1-2 must be in the OFF position). 2: 4 to 20mA (switch S1-2 must be in the ON position) Note: Switch between current or voltage inputs by using (S1-2) switch on the terminal board.	0 to 2	2	No	A	A	A	A	A
H3-09	Terminal A2 Function Selection Terminal A2 Sel	Selects the function of terminal A2. Same choices as Terminal A3 Function Selection (H3-05).	0 to 1F	0	No	A	A	A	A	A
H3-10	Terminal A2 Gain Setting Terminal A2 Gain	Sets the output level when 10V is input.	0.0 to 1000.0	100.0%	Yes	A	A	A	A	A
H3-11	Terminal A2 Bias Setting Terminal A2 Bias	Sets the output level when 0V is input.	-100.0 to 100.0	0.0%	Yes	A	A	A	A	A
H3-12	Analog Input Filter Time Constant Filter Avg Time	This parameter adjusts the filter on all 3 analog inputs. Increase to add stability, decrease to improve response.	0.00 to 2.00	0.03sec	No	A	A	A	A	A

6

■Adjusting Analog Frequency Reference Using Parameters

The frequency reference is input from the control circuit terminals using analog voltage and current.

If using frequency reference terminal A1 as an input terminal, perform adjustments using parameters H3-02 and H3-03. If using multi-function analog input terminal A2 as a frequency reference terminal, perform adjustments using H3-10 and H3-11.

Adjustment can be made using H3-06 and H3-07 when multi-function analog input terminal A3 is used as a frequency reference terminal.

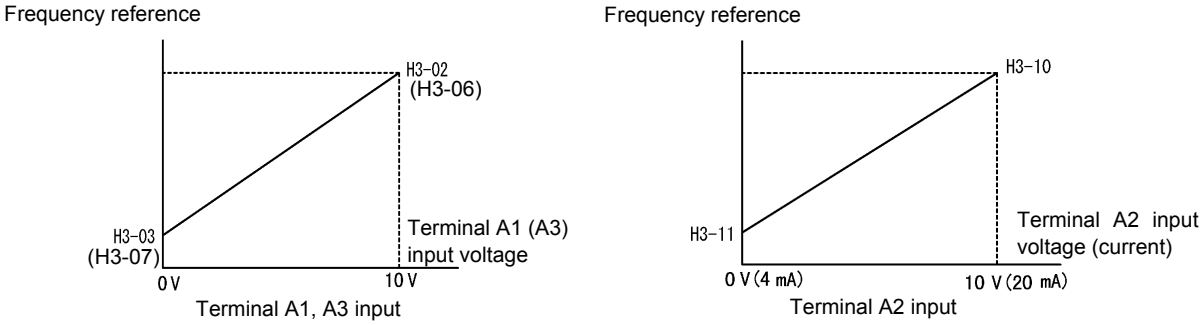

Fig 6.24 Terminals A1 and A2 Inputs

■Adjusting Frequency Gain Using an Analog Input

When H3-09 or H3-05 is set to 1 (frequency gain), you can adjust the frequency gain using the analog input terminal A2 or A3.

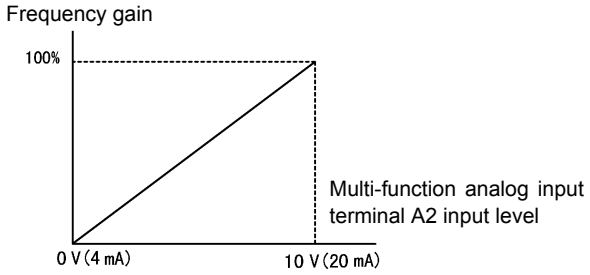

Fig 6.25 Frequency Gain Adjustment (Terminal A2 Input)

The frequency gain for terminal A1 is the sum of H3-02 and terminal A2 gain. For example, when H3-02 is set to 100% and terminal A2 is set to 5 V, the terminal A1 frequency reference will be 50%.

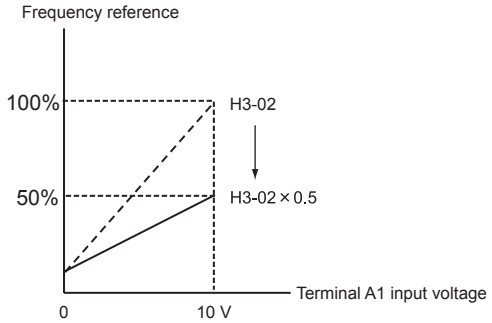

Setting Precautions

H3-05 cannot be set to 0.

■Adjusting Frequency Bias Using an Analog Input

When parameter H3-09 or H3-05 is set to 0 (add to terminal A1), the frequency equivalent to the terminal A2 or A3 input voltage is added to A1 as a bias.

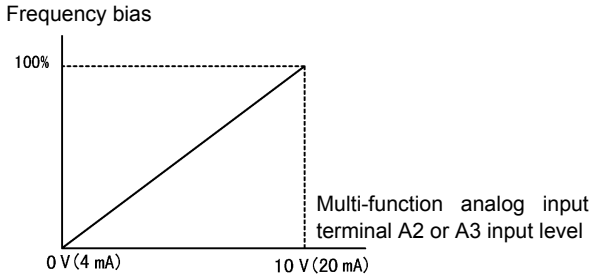

Fig 6.26 Frequency Bias Adjustment (Terminal A2 or A3 Input)

For example, if H3-02 is 100%, H3-03 is 0%, and terminal A2 is set to 1 V, the frequency reference from terminal A1 when 0Vis input to A1 will be 10%.

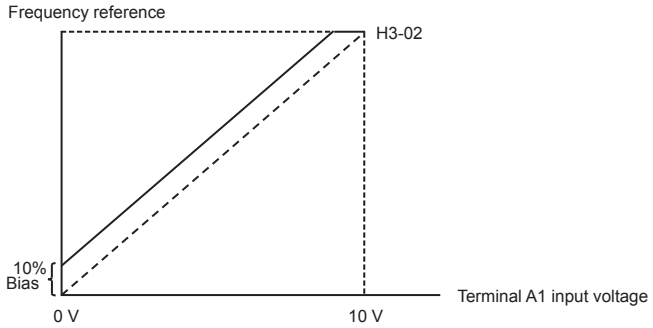

◆ Operation Avoiding Resonance (Jump Frequency Function)

The jump frequency function operates the motor while avoiding resonance caused by characteristic frequencies in the machinery.

This function is effective in creating a frequency reference dead band.

During constant-speed operation, operation within the jump frequency range is prohibited. Smooth operation still used during acceleration and deceleration, i.e., jumps are not performed.

■Related Parameters

Parameter Number	Name: Display	Description	Setting Range	Factory Setting	Change during Operation	Control Methods: V/f	V/f with PG	Open Loop Vector 1	Flux Vector	Open Loop Vector 2
d3-01	Jump Frequency 1 Jump Freq 1	This parameter allows programming of up to three prohibited frequency reference points for eliminating problems with resonant vibration of the motor / machine. This feature does not actually eliminate the selected frequency values, but will accelerate and decelerate the motor through the prohibited bandwidth.	0.0 to 400.0	0.0Hz	No	A	A	A	A	A
d3-02	Jump Frequency 2 Jump Freq 2			0.0Hz	No	A	A	A	A	A
d3-03	Jump Frequency 3 Jump Freq 3			0.0Hz	No	A	A	A	A	A
d3-04	Jump Frequency Width Jump Bandwidth	This parameter determines the width of the deadband around each selected prohibited frequency reference point. A setting of "1.0" will result in a deadband of +/- 1.0Hz..	0.0 to 20.0	1.0Hz	No	A	A	A	A	A

The relationship between the output frequency and the jump frequency reference is as follows:

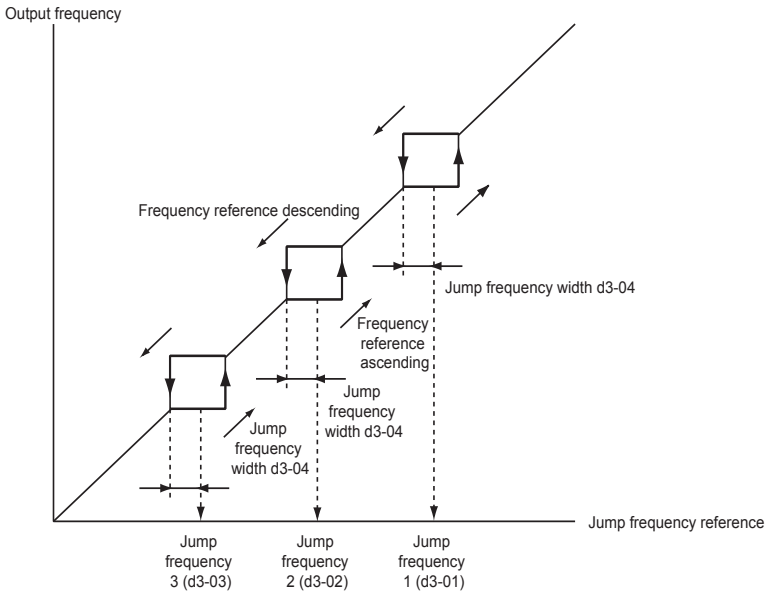

Fig 6.27 Jump Frequency

■Setting Jump Frequency Reference Using an Analog Input

When parameter H3-09 (Multi-function Analog Input Terminal A2 Function Selection) or H3-05 (Multi-function Analog Input Terminal A3 Function Selection) is set to A (jump frequency), you can change the jump frequency using the terminal A2 input level.

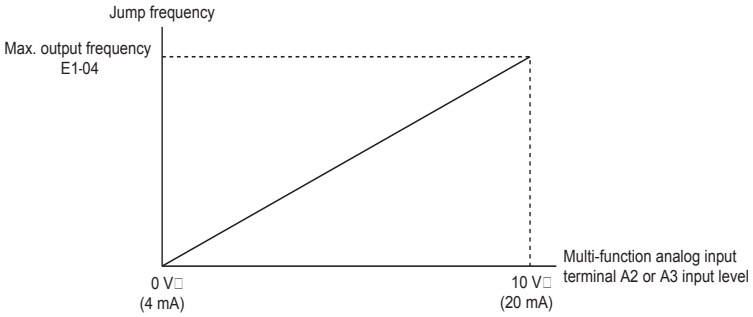

Fig 6.28 Jump Frequency Setting Using an Analog Input

■Setting Precautions

- Set the jump frequency according to the following formula: d3-01 ≥ d3-02 ≥ d3-03 > Analog input.
- When parameters d3-01 to d3-03 are set to 0Hz, the jump frequency function is disabled.

◆ Adjusting Frequency Reference Using Pulse Train Inputs

The frequency reference can be adjusted when b1-01 (Reference Selection) is set to 4 (Pulse Train Input). Set the pulse frequency in parameter H6-02 to 100% reference, and then adjust the gain and bias accordingly using H6-03 and H6-04.

■Related Parameters

Parameter Number	Name: Display	Description	Setting Range	Factory Setting	Change during Operation	Control Methods: V/f	V/f with PG	Open Loop Vector 1	Flux Vector	Open Loop Vector 2
H6-01	Terminal RP Pulse Train Input Function Selection / Pulse Input Sel	Selects the function of pulse train terminal RP. 0: Frequency reference 1: PID feedback value 2: PID setpoint value	0 to 2	0	No	A	A	A	A	A
H6-02	Pulse Train Input Scaling / Pulse In Scaling	Sets the number of pulses (in Hz) that is equal to the maximum output frequency E1-04.	1000 to 32000	1440Hz	Yes	A	A	A	A	A
H6-03	Pulse Train Input Gain / Pulse Input Gain	Sets the output level when the pulse train input is at 100% as a percentage of maximum output frequency E1-04.	0.0 to 1000.0	100.0%	Yes	A	A	A	A	A
H6-04	Pulse Train Input Bias / Pulse Input Bias	Sets the output level when the pulse train input is 0Hz as a percentage of maximum output frequency E1-04.	-100.0 to 100.0	0.0%	Yes	A	A	A	A	A
H6-05	Pulse Train Input Filter Time / Pulse In Filter	Sets the pulse train input filter time constant in seconds.	0.00 to 2.00	0.10sec	Yes	A	A	A	A	A

The following diagram shows the method for adjusting the frequency reference using pulse inputs.

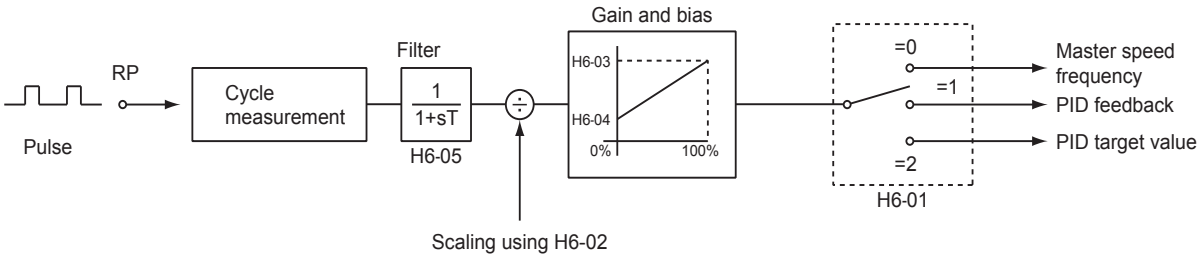

Fig 6.29 Frequency Reference Adjustments Using Pulse Train Inputs

Speed Limit (Frequency Reference Limit Function)

This section explains how to limit the motor speed.

◆ Limiting Maximum Output Frequency

If you do not want the motor to rotate above a given frequency, use parameter d2-01.

Set the upper limit value of the Drive output frequency as a percent, taking E1-04 (Maximum Output Frequency) to be 100%.

■Related Parameters

Parameter Number	Name	Description	Setting Range	Factory Setting	Change during Operation	Control Methods				
	Display					V/f	V/f with PG	Open Loop Vector 1	Flux Vector	Open Loop Vector 2
d2-01	Frequency Reference Upper Limit Ref Upper Limit	Determines maximum frequency reference, set as a percentage of maximum output frequency (E1-04). If the frequency reference is above this value, actual Drive speed will be limited to this value. This parameter applies to all frequency reference sources.	0.0 to 110.0	100.0%	No	A	A	A	A	A

◆ Limiting Minimum Frequency

If you do not want the motor to rotate at below a given frequency, use parameters d2-02 or d2-03.

There are two methods of limiting the minimum frequency, as follows:

- Adjust the minimum level for all frequencies.
- Adjust the minimum level for the master speed frequency (i.e., the lower levels of the jog frequency, multi-step speed frequency, and auxiliary frequency will not be adjusted).

■Related Parameters

Parameter Number	Name: Display	Description	Setting Range	Factory Setting	Change during Operation	Control Methods: V/f	V/f with PG	Open Loop Vector 1	Flux Vector	Open Loop Vector 2
d2-02	Frequency Reference Lower Limit / Ref Lower Limit	Determines maximum frequency reference, set as a percentage of maximum output frequency (E1-04). If the frequency reference is above this value, actual Drive speed will be limited to this value. This parameter applies to all frequency reference sources.	0.0 to 110.0	0.0%	No	A	A	A	A	A
d2-03	Master Speed Reference Lower Limit / Ref1 Lower Limit	Determines maximum frequency reference, set as a percentage of maximum output frequency (E1-04). If the frequency reference is above this value, actual Drive speed will be limited to this value. This parameter applies to all frequency reference sources.	0.0 to 110.0	0.0%	No	A	A	A	A	A

■Adjusting Frequency Lower Limit Using an Analog Input

If you set parameter H3-09 (Multi-function Analog Input Terminal A2 Function Selection) or H3-05 (Multi-function Analog Input Terminal A3 Function Selection) to 9 (output frequency lower level), you can adjust the frequency lower level using the terminal A2 input level.

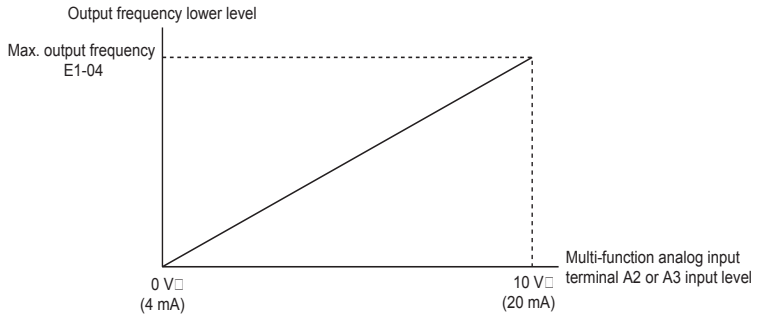

Fig 6.30 Output Frequency Lower Level for Multi-function Analog Input

INFO

If parameter d2-02 and terminal A2 output frequency lower level have been set at the same time, the larger set value will become the frequency lower limit.

Improved Operating Efficiency

This section explains functions for improving motor operating efficiency.

◆ Reducing Motor Speed Fluctuation (Slip Compensation Function)

When the load is large, the amount of motor slip also grows large and the motor speed decreases. The slip compensation function controls the motor at a constant speed, regardless of changes in load. When the motor is operating at the rated load, parameter E2-02 (Motor Rated Slip) × the frequency in parameter C3-01 is added to the output frequency.

■Related Parameters

Parameter Number	Name: Display	Description	Setting Range	Factory Setting	Change during Operation	Control Methods: V/f	V/f with PG	Open Loop Vector 1	Flux Vector	Open Loop Vector 2
C3-01	Slip Compensation Gain Slip Comp Gain	This parameter is used to increase motor speed to account for motor slip by boosting the output frequency. If the speed is lower than the frequency reference, increase C3-01. If the speed is higher than the frequency reference, decrease C3-01. Note: Adjustment is not normally required. When operating in Open Loop Vector, this parameter works as a function to set the proper amount of gain.	0.0 to 2.5	1.0*	Yes	A	No	A	A	A
C3-02	Slip Compensation Primary Delay Time Slip Comp Time	This parameter adjusts the filter on the output of the slip compensation function. Increase to add stability, decrease to improve response. • Reduce the setting when slip compensation response is slow. • When speed is not stabilized, increase the setting.	0 to 10000	200ms *	No	A	No	A	No	No
C3-03	Slip Compensation Limit Slip Comp Limit	This parameter sets the upper limit for the slip compensation function. It is set as a percentage of motor rated slip (E2-02).	0 to 250	200%	No	A	No	A	No	No
C3-04	Slip Compensation Selection During Regeneration Slip Comp Regen	Determines whether slip compensation is enabled or disabled during regenerative operation. 0: Disabled 1: Enabled	0 or 1	0	No	A	No	A	No	No
C3-05	Output Voltage Limit Operation Selection Output V limit	Determines if the motor magnetic flux is automatically decreased when output voltage saturation occurs. 0: Disabled 1: Enabled	0 or 1	0 *1	No	No	No	A	A	A

* The display shows the factory settings for Open Loop Vector. Default settings will change in accordance with the control mode.

* 1. Factory default changes based on motor control mode.

■Adjusting Slip Compensation Gain

You can switch the C3-01 parameter settings as shown below by changing the control method.

- V/f control without PG: 0.0
- Open-loop vector control: 1.0
- Flux vector control: 1.0

Set C3-01 to 1.0 to compensate the rated slip set using the rated torque output status.

Adjust the slip compensation gain using the following procedure.

1. Set E2-02 (Motor Rated Slip) and E2-03 (Motor No-load Current) correctly.
   You can calculate the motor rated slip from the values on the motor nameplate using the following formula.

   Amount of motor rated slip (Hz) = Motor rated frequency (Hz) - No. of rated rotations (min^{-1}.) × No. of motor poles / 120
   Set the values for rated voltage, rated frequency, and no-load current in the motor unladen current. The motor rated slip is set automatically in the vector control using autotuning.
2. In V/f control, set C3-01 to 1.0. Setting this parameter to 0.0 disables slip compensation.
3. Apply a load, and measure the speed to adjust the slip compensation gain. Adjust the slip compensation gain by 0.1 at a time. If the speed is less than the target value, increase the slip compensation gain, and if the speed is greater than the target value, reduce the slip compensation gain.

For flux vector control, the slip compensation gain is used as the motor temperature compensation gain. When the motor temperate increases, the motor's internal constant increases, resulting in an increase in slip. If C3-01 is set, the amount of slip is adjusted as the temperature rises. Set C3-01 if the amount of torque varies with the temperature when using torque control or a torque limit. The larger the value of C3-01, the larger the compensation.

■Adjusting Slip Compensation Primary Delay Time Constant

Set the slip compensation primary delay time constant in ms.

You can switch the factory settings as follows by changing the control method.

- V/f control without PG: 2000ms
- Open-loop vector control: 200ms

Normally, there is no need to make these settings. When the slip compensation response is low, lower the set value. When the speed is unstable, increase the set value.

■Adjusting Slip Compensation Limit

Set the upper limit for the slip compensation amount as a percent, taking the motor rated slip amount as 100%.

If the speed is lower than the target value but does not change even when you adjust the slip compensation gain, the motor may have reached the slip compensation limit. Increase the limit, and check the speed again. Make the settings, however, to make sure that the value of the slip compensation limit and reference frequency does not exceed the tolerance of the machine.

The following diagram shows the slip compensation limit for the constant torque range and fixed output range.

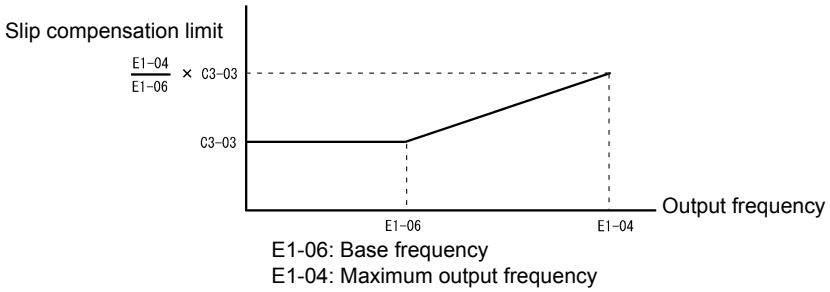

Fig 6.31 Slip Compensation Limit

■Selecting Slip Compensation Function During Regeneration

Set whether to enable or disable the slip compensation function during regeneration.

If the slip compensation function operates during regeneration, you might have to use the braking option (braking resistor, Braking Resistor Unit, and Braking Unit) to momentarily increase the regenerative amount.

■Selecting Output Voltage Limit Operation

If output voltage saturation occurs while the output voltage limit operation is disabled, the output current will not change, but torque control accuracy will be lost. If torque control accuracy is required, change the settings to enable the output voltage limit operation.

If the output voltage limit operation is enabled, motor magnetic flux current is controlled automatically, and torque control accuracy is maintained to limit the output voltage references. Consequently, the output current will increase by approximately 10% maximum (with rated load) compared with when the output voltage limit operation is disabled, so check the Drive current margin.

Setting Precautions

- If using the device at medium to low speed only, if the power supply voltage is 10% or more higher than the motor rated voltage, or if the torque control accuracy at high speeds is insufficient, it is not necessary to change the output voltage limit operation.
- If the power supply voltage is too low compared with the motor rated voltage, torque control accuracy may be lost even if the output voltage limit operation is enabled.

◆ Compensating for Insufficient Torque at Startup and Low-speed Operation (Torque Compensation)

The torque compensation function detects that the motor load has increased, and increases the output torque.

V/f control calculates and adjusts the motor primary loss voltage according to the output voltage (V), and compensates for insufficient torque at startup and during low-speed operation. Calculate the compensation voltage as follows: Motor primary voltage loss × parameter C4-01.

Vector control separates the motor excitation current and the torque current by calculating the motor primary current, and controlling each of the two separately.

Calculate the torque current as follows: Calculated torque reference × C4-01

■Related Parameters

Parameter Number	Name: Display	Description	Setting Range	Factory Setting	Change during Operation	Control Methods: V/f	V/f with PG	Open Loop Vector 1	Flux Vector	Open Loop Vector 2
C4-01	Torq Comp Gain Torq Comp Gain	This parameter sets the gain for the Drive's automatic torque boost function to match the Drive's output voltage to the motor load. This parameter helps to produce better starting torque. It determines the amount of torque or voltage boost based upon motor current, motor resistance, and output frequency. Note: Adjustment is not normally required.	0.00 to 2.50	1.00	Yes	A	A	A	No	No
C4-02	Torque Compensation Primary Delay Time Torq Comp Time	This parameter adjusts the filter on the output of the torque compensation function. Increase to add stability, decrease to improve response. Note: Adjustment is not normally required.	0 to 10000	20ms *	No	A	A	A	No	No

* The display shows the factory settings for Open loop vector 1 (OLV1). Default settings will change in accordance with the control mode.

■Adjusting Torque Compensation Gain

Normally, there is no need to make this adjustment. Do not adjust the torque compensation gain when using open-loop vector control.

Adjust the torque compensation gain using V/f control in the following circumstances.

- If the cable is very long, increase the set value.
- If the (maximum applicable) motor capacity is smaller than the Drive capacity, increase the set value.
- If the motor is vibrating, reduce the set value.

Adjust this parameter so that the output current during low-speed rotation does not exceed the Drive rated output current range.

■Adjusting the Torque Compensation Primary Delay Time Constant

Set the torque compensation function primary delay in ms.

You can switch the factory settings as follows by changing the control method settings:

- V/f control without PG: 200ms
- V/f control with PG: 200ms
- Open-loop vector control: 20ms

Normally, there is no need to make this setting. Adjust the parameter as shown below.

- If the motor is vibrating, increase the set value.
- If the motor response is low, decrease the set value.

◆ Hunting-prevention Function

The hunting-prevention function suppresses hunting when the motor is operating with a light load. This function can be used in V/f without PG and V/f with PG.

■Related Parameters

Parameter Number	Name: Display	Description	Setting Range	Factory Setting	Change during Operation	Control Methods: V/f	V/f with PG	Open Loop Vector 1	Flux Vector	Open Loop Vector 2
n1-01	Hunting Prevention Selection Hunt Prev Select	If the motor vibrates while lightly loaded, hunting prevention may reduce the vibration. 0: Disabled 1: Enabled	0 or 1	1	No	A	A	No	No	No
n1-02	Hunting Prevention Gain Setting Hunt Prev Gain	Sets the gain for the Hunting Prevention Function. If the motor vibrates while lightly loaded and n1-01=1, increase the gain by 0.1 until vibration ceases. If the motor stalls while n1-01=1, decrease the gain by 0.1 until the stalling ceases.	0.00 to 2.50	1.00	No	A	A	No	No	No

◆ Stabilizing Speed (Speed Feedback Detection Function)

The speed feedback detection control (AFR) function measures the stability of the speed when a load is suddenly applied, by calculating the amount of fluctuation of the torque current feedback value, and compensating the output frequency with the amount of fluctuation.

■Related Parameters

Parameter Number	Name: Display	Description	Setting Range	Factory Setting	Change during Operation	Control Methods: V/f	V/f with PG	Open Loop Vector 1	Flux Vector	Open Loop Vector 2
n2-01	Speed Feedback Detection Control (AFR) Gain AFR Gain	Sets the internal speed feedback detection control gain in the automatic frequency regulator (AFR). Normally, there is no need to change this setting. Adjust this parameter as follows: - If hunting occurs, increase the set value. - If response is low, decrease the set value. Adjust the setting by 0.05 units at a time, while checking the response.	0.00 to 10.00	1.00	No	No	No	A	No	No
n2-02	Speed Feedback Detection Control (AFR) Time Constant AFR Time	Sets the time constant to control the rate of change in the speed feedback detection control.	0 to 2000	50ms	No	No	No	A	No	No

Machine Protection

This section explains functions for protecting the machine.

◆ Reducing Noise and Leakage Current

The switching frequency of the Drive's output transistor can be changed to reduce carrier noise and leakage current from the motor.

■Related Parameters

Parameter Number	Name: Display	Description	Setting Range	Factory Setting	Change during Operation	Control Methods: V/f	V/f with PG	Open Loop Vector 1	Flux Vector	Open Loop Vector 2
C6-02	Carrier Frequency Selection CarrierFreq Sel	Selects the number of pulses per second of the output voltage waveform. Setting range determined by C6-01 setting. 0: Low noise 1: Fc = 2.0 kHz 2: Fc = 5.0 kHz 3: Fc = 8.0 kHz 4: Fc = 10.0 kHz 5: Fc = 12.5 kHz 6: Fc = 15.0 kHz OF: Program (Determined by the settings of C6-03 thru C6-05)	1 to F	6 *2	No	Q	Q	Q	A	No *5
C6-03	Carrier Frequency Upper Limit CarrierFreq Max	Sets the carrier frequency upper limit and lower limit in kHz units. The carrier frequency gain is set as follows: 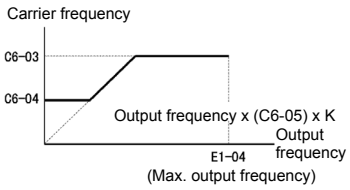 	2.0 to 15.0 *3 *4	15.0 kHz *2	No	A	A	A	A	No
C6-04	Carrier Frequency Lower Limit CarrierFreq Min		0.4 to 15.0 *3 *4	15.0 kHz *2	No	A	A	No	No	No
C6-05	Carrier Frequency Proportional Gain CarrierFreq Gain	K is a coefficient that depends on the setting of C6-03. C6-03 ≥ 10.0 kHz: K = 3 10.0 kHz > C6-03 ≥ 5.0 kHz: K = 2 5.0 kHz > C6-03: K = 1 Maximum carrier frequency allowed when C6-02 = F. Note: Carrier frequency is set to C6-03 (upper limit) when operating in Vector Control Mode. C6-05 Sets the relationship of output frequency to carrier frequency when C6-02 = OF.	00 to 99 *4	00	No	A	A	No	No	No
C6-11	Carrier Frequency Selection for Open Loop Vector 2 Carrier Freq Sel	Selects the carrier frequency during Vector Control 2 wo/PG. 1: 2kHz (3-phase modulation) 2: 4kHz (3-phase modulation) 3: 6kHz (3-phase modulation) 4: 8kHz (3-phase modulation)	1 to 4	4 *2	No	No *5	No *5	No *5	No *5	Q

* 1. The setting range depends on the control method of the Drive.
* 2. The factory setting depends on the capacity of the Drive.
* 3. The setting range depends on the capacity of the Drive.
* 4. This parameter can be monitored or set only when 1 is set for C6-01 and F is set for C6-02.
* 5. Displayed in Quick Programming Mode when motor 2 is set for a multi-function input.

■Control Mode and Carrier Frequency Settings

Carrier frequency settings are restricted as listed in the following table according to the control mode selection.

Control Mode	Carrier Frequency
V/f control with or without a PG	1: 2.0 kHz 2: 5.0 kHz 3: 8.0 kHz 4: 10.0 kHz 5: 12.5 kHz 6: 15.0 kHz F: Any setting* Detailed settings are available in C6-03, C6-04, and C6-05.
Open-loop vector control 1 or Flux vector control	1: 2.0 kHz 2: 5.0 kHz 3: 8.0 kHz 4: 10.0 kHz 5: 12.5 kHz 6: 15.0 kHz F: Any setting* The upper limit of the carrier frequency is determined by C6-03.
Open-loop vector control 2	1: 2.0 kHz 2: 4.0 kHz 3: 6.0 kHz 4: 8.0 kHz

* The upper limit of the carrier frequency depends on the Drive capacity.

■Carrier Frequency Setting Precautions

When selecting the carrier frequency, observe the following precautions.

- Adjust the carrier frequency according to the cases shown below.
  If the wiring distance between Drive and motor is long: Set the carrier frequency low. (Use the following values as guidelines.)

Wiring Length	50 m or less	100 m or less	Over 100 m
C6-02 (carrier frequency selection) setting	1 to 6 (15 kHz)	1 to 4 (10 kHz)	1 to 2 (5 kHz)

  If speed and torque are inconsistent at low speeds: Set the carrier frequency low.
  If leakage current from the Drive is large: Set the carrier frequency low.
  If metallic noise from the motor is large: Set the carrier frequency high.

- When using V/f control or V/f control with PG, you can vary the carrier frequency according to the output frequency, as shown in the following diagram, by setting C6-03 (Carrier Frequency Upper Limit), C6-04 (Carrier Frequency Lower Limit), and C6-05 (Carrier Frequency Proportional Gain).

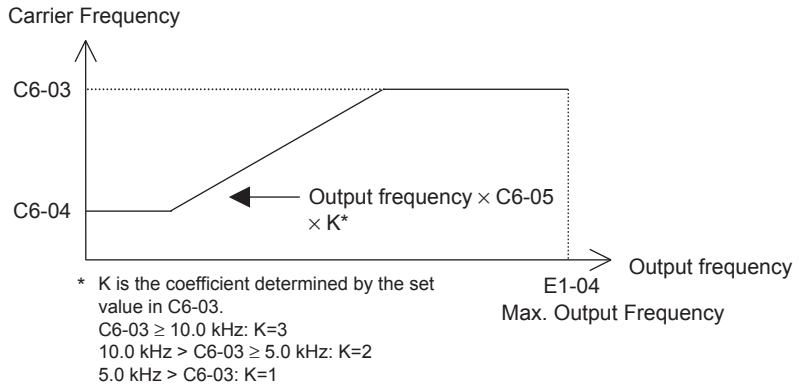

Fig 6.32

- With vector control, the carrier frequency is fixed to the Carrier Frequency Upper Limit in C6-03 if user-set or by the carrier frequency set in C6-02.
- To fix the carrier frequency, set C6-03 and C6-04 to the same value, or set C6-05 to 0.
- If the settings are as shown below, OPE11 (Parameter setting error) will occur.
  If Carrier Frequency Proportional Gain (C6-05) > 6 and C6-03 < C6-04.
- Depending on the carrier frequency setting, the Drive's overload level may be reduced. Even when the overload current falls to below 150%, OL2 (Drive overload) will be detected. The Drive overload current reduction level is shown below.

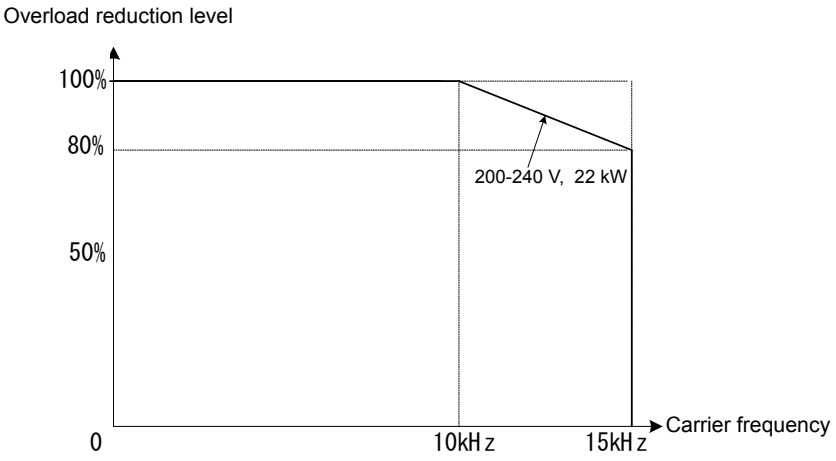

Fig 6.33 Overload Reduction Level for V/f Control, V/f Control with PG, Open-loop Vector Control 1, and Flux Vector Control

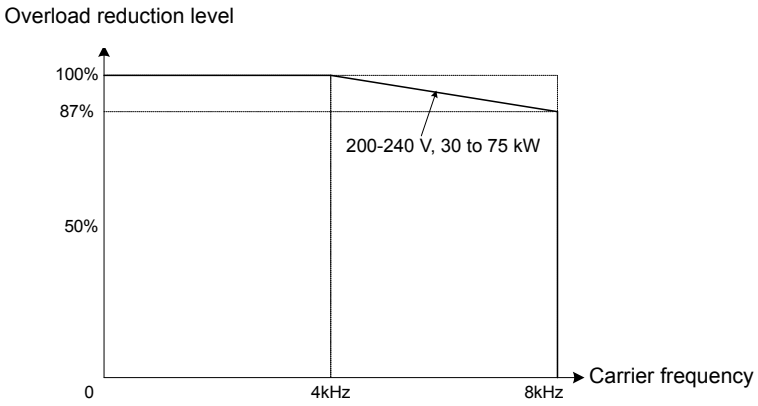

Fig 6.34 Overload Reduction Level for Open-loop Vector Control 2

◆ Limiting Motor Torque (Torque Limit Function)

The motor torque limit function is enabled only with open-loop torque control.

In the open-loop vector control method, the user-set value is applied to the torque limit by calculating internally the torque output by the motor. Enable this function if you do not want a torque above a specified amount to be applied to the load, or if you do not want a regeneration value above a specified amount to occur.

■Related Parameters

Parameter Number	Name	Description	Setting Range	Factory Setting	Change during Operation	Control Methods				
						V/f	V/f with PG	Open Loop Vector 1	Flux Vector	Open Loop Vector 2
L7-01	Forward Torque Limit Torq Limit Fwd	Sets the torque limit value as a percentage of the motor rated torque. Four individual quadrants can be set. 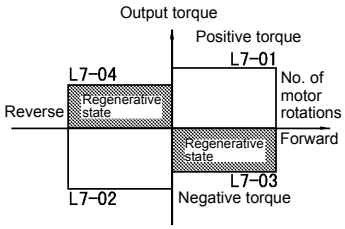 	0 to 300	200%	No	No	No	A	A	A
L7-02	Reverse Torque Limit Torq Limit Rev		0 to 300	200%	No	No	No	A	A	A
L7-03	Forward Regenerative Torque Limit Torq Lmt Fwd Rgn		0 to 300	200%	No	No	No	A	A	A
L7-04	Reverse Regenerative Torque Limit Torq Lmt Rev Rgn		0 to 300	200%	No	No	No	A	A	A

Multi-function Analog Input (H3-05, H3-09)

Setting Value	Function	Contents (100%)	Control Methods				
			V/f	V/f with PG	Open Loop Vector 1	Flux Vector	Open Loop Vector 2
10	Positive torque limit	Motor's rated torque	No	No	Yes	Yes	Yes
11	Negative torque limit	Motor's rated torque	No	No	Yes	Yes	Yes
12	Regenerative torque limit	Motor's rated torque	No	No	Yes	Yes	Yes
15	Positive/negative torque limit	Motor's rated torque	No	No	Yes	Yes	Yes

Note The forward torque limit is the limit value when the analog input signal generates forward torque. This torque limit setting is enabled even when the analog input signal generates forward torque while the motor is operating (regeneration).

■Setting the Torque Limit in Parameters

Using L7-01 to L7-04, you can set individually four torque limits in the following directions: Forward drive, reverse drive, forward regeneration, and reverse regeneration.

■Set the Torque Limit Value Using an Analog Input

You can change the analog input level torque limit value by setting the torque limit in multi-function analog input terminals A2 and A3.

The analog input terminal signal level is factory-set as follows:

Multi-function analog input terminal A2: 4 to 20mA
Multi-function analog input terminal A3: 0 to 10

The following diagram shows the relationship between the torque limits.

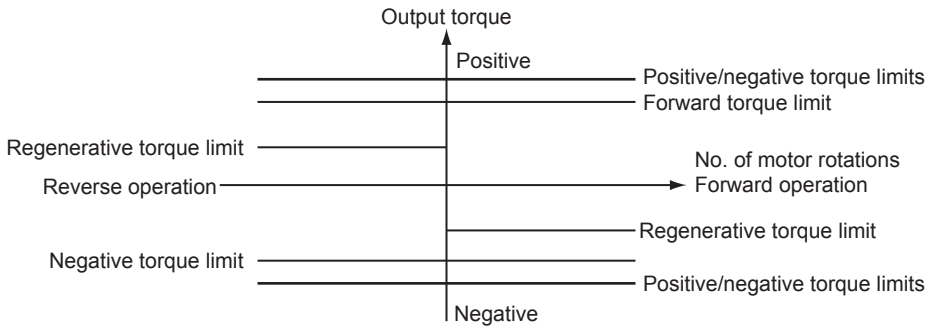

Fig 6.35 Torque Limit by Analog Input

■Setting Torque Limits Using Parameters and an Analog Input

The following block diagram shows the relationship between torque limit using parameters and torque limit using an analog input.

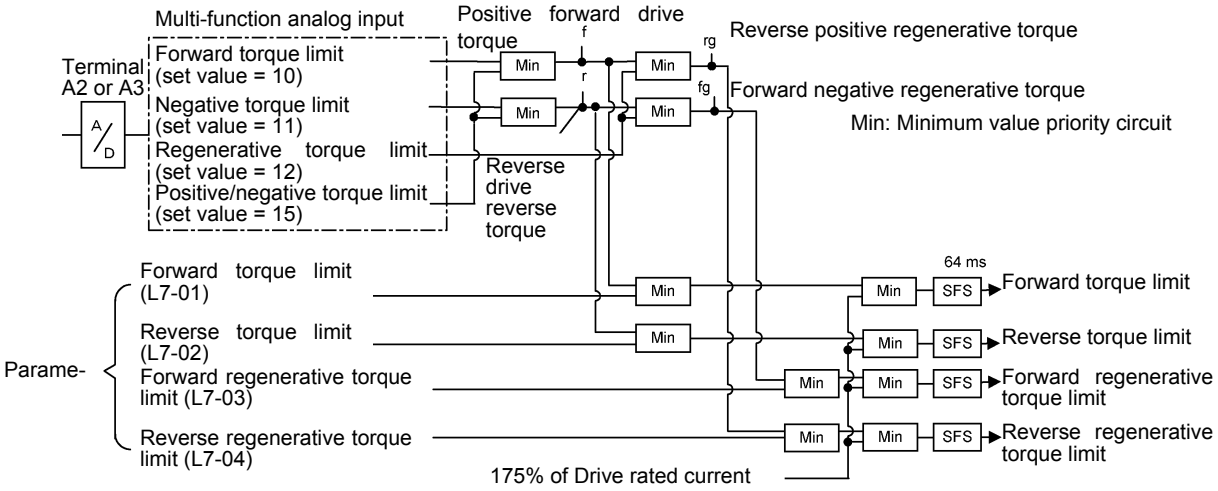

Fig 6.36 Torque Limit Using Parameters and an Analog Input

■Setting Precautions

- When the torque limit function is operating, control and compensation of the motor speed is disabled because torque control is given priority.
- When using the torque limit to raise and lower loads, do not carelessly lower the torque limit value, as this may result in the motor falling or slipping.
- Torque limits using an analog input are the upper limit value (during 10Vor 20mA input) of 100% of the motor rated torque. To make the torque limit value during 10Vor 20mA input 150% of the rated torque, set the input terminal gain to 150.0 (%). Adjust the gain for multi-function analog input terminal A2 using H3-10 and for multi-function analog input terminal A3 using H3-06.
- The torque limit accuracy is ±5% at the output frequency of 10Hz or above. When output frequency is less than 10Hz, accuracy is lowered.

◆ Preventing Motor Stalling During Operation

Stall prevention during operation prevents the motor from stalling by automatically lowering the Drive's output frequency when a transient overload occurs while the motor is operating at a constant speed.

Stall prevention during operation is enabled only during V/f control. If the Drive output current continues to exceed the setting in parameter L3-06 for 100ms or longer, the motor speed is reduced. Set whether to enable or disable deceleration time using parameter L3-05. Set the deceleration time using C1-02 (Acceleration time 1) or C1-04 (Acceleration Time 2).
If the Drive output current reaches the set value in L3-06 - 2% (Drive Rated Output Current), the motor will accelerate again at the frequency set or the acceleration time set.

■Related Parameters

Parameter Number	Name	Description	Setting Range	Factory Setting	Change during Operation	Control Methods				
	Display					V/f	V/f with PG	Open Loop Vector 1	Flux Vector	Open Loop Vector 2
L3-05	Stall Prevention Selection During Running StallP Run Sel	Selects the stall prevention method to use to prevent Drive faults during run. 0: Disabled - Drive runs a set frequency. A heavy load may cause the Drive to trip on an OC or OL fault. 1: Decel Time 1 - In order to avoid stalling during heavy loading, the Drive will decelerate at Decel time 1 (C1-02) if the output current exceeds the level set by L3-06. Once the current level drops below the L3-06 level, the Drive will accelerate back to its frequency reference at the active acceleration rate. 2: Decel Time 2 - Same as setting 1 except the Drive decelerates at Decel Time 2 (C1-04). When output frequency is 6Hz or less, stall prevention during run is disabled regardless of the setting in L3-05.	0 to 2	1	No	A	A	No	No	No
L3-06	Stall Prevention Level During Running StallP Run Level	This parameter is enabled when L3-05 is set to "1" or "2". Drive rated current is set as 100%. Decrease the set value if stalling or excessive current occurs with the factory settings.	30 to 200	160%	No	A	A	No	No	No

◆ Changing Stall Prevention Level during Operation Using an Analog Input

If you set H3-09 (Multi-function Analog Input Terminal A2 Function Selection) or H3-05 (Multi-function Analog Input Terminal A3 Function Selection) to 8 (stall prevention level during run), you can change the stall level during operation by setting H3-10 (Gain (Terminal A2)) and H3-11 (Bias (Terminal A2)) or H3-06 (Gain (Terminal A3)) and H3-07 (Bias (Terminal A3).

The stall prevention level during operation enabled is the multi-function analog input terminal A2 or A3 input level or the set value in parameter L3-06, whichever is the smaller.

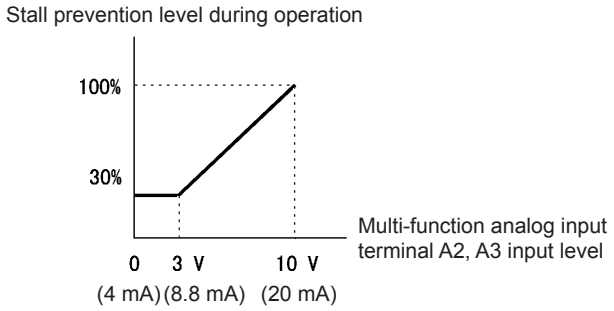

Fig 6.37 Stall Prevention Level during Operation Using an Analog Input

INFO

If the motor capacity is smaller than the Drive capacity or the motor stalls when operating at the factory settings, lower the stall prevention level during operation.

◆ Detecting Motor Torque

If an excessive load is placed on the machinery (overtorque) or the load is suddenly lightened (undertorque), you can output an alarm signal to multi-function output terminal M1-M2, M3-M4, M5-M6, P3-C3, or P4-C4.

To use the overtorque/undertorque detection function, set B, 17, 18, 19 (overtorque/undertorque detection NO/NC) in one of the following parameters: H2-01 to H2-05 (multi-function output terminals M1-M2, P1-PC, P2-PC, P3-C3, and P4-C4 function selection).

The overtorque/undertorque detection level is the current level (Drive rated output current 100%) in V/f control, and the motor torque (motor rated torque 100%) in vector control.

■Related Parameters

Parameter Number	Name: Display	Description	Setting Range	Factory Setting	Change during Operation	Control Methods: V/f	V/f with PG	Open Loop Vector 1	Flux Vector	Open Loop Vector 2
L6-01	Torque Detection Selection 1 Torq Det 1 Sel	Determines the Drive's response to an Overtorque/Undertorque condition. Overtorque and Undertorque are determined by the settings in parameters L6-02 and L6-03. The multi-function output settings "B" and "17" in the H2-oo parameter group are also active if programmed. 0: Disabled 1: OL3 at Speed Agree - Alarm (Overtorque Detection only active during Speed Agree and Operation continues after detection). 2: OL3 at RUN - Alarm (Overtorque Detection is always active and operation continues after detection). 3: OL3 at Speed Agree - Fault (Overtorque Detection only active during Speed Agree and Drive output will shut down on an OL3 fault). 4: OL3 at RUN - Fault (Overtorque Detection is always active and Drive output will shut down on an OL3 fault). 5: UL3 at Speed Agree - Alarm (Undertorque Detection is only active during Speed Agree and operation continues after detection). 6: UL3 at RUN - Alarm (Undertorque Detection is always active and operation continues after detection). 7: UL3 at Speed Agree - Fault (Undertorque Detection only active during Speed Agree and Drive output will shut down on an OL3 fault). 8: UL3 at RUN - Fault (Undertorque Detection is always active and Drive output will shut down on an OL3 fault).	0 to 8	0	No	A	A	A	A	A
L6-02	Torque Detection Level 1 Torq Det 1 Lvl	Sets the Overtorque/Undertorque detection level as a percentage of Drive rated current or torque for Torque Detection 1. Current detection for A1-02 = 0 or 1. Torque detection for A1-02 = 2 or 3.	0 to 300	150%	No	A	A	A	A	A

Parameter Number	Name: Display	Description	Setting Range	Factory Setting	Change during Operation	Control Methods: V/f	V/f with PG	Open Loop Vector 1	Flux Vector	Open Loop Vector 2
L6-03	Torque Detection Time 1 Torq Det 1 Time	Sets the length of time an Overtorque/Undertorque condition must exist before Torque Detection 1 is recognized by the Drive.	0.0 to 10.0	0.1sec	No	A	A	A	A	A
L6-04	Torque Detection Selection 2 Torq Det 2 Sel	Determines the Drive's response to an Overtorque/Undertorque condition. Overtorque and Undertorque are determined by the settings in parameters L6-05 and L6-06. The multi-function output settings "18" and "19" in the H2-oo parameter group are also active if programmed. 0: Disabled 1: OL4 at Speed Agree - Alarm (Overtorque Detection only active during Speed Agree and Operation continues after detection). 2: OL4 at RUN - Alarm (Overtorque Detection is always active and operation continues after detection). 3: OL4 at Speed Agree - Fault (Overtorque Detection only active during Speed Agree and Drive output will shut down on an OL4 fault). 4: OL4 at RUN - Fault (Overtorque Detection is always active and Drive output will shut down on an OL4 fault). 5: UL4 at Speed Agree - Alarm (Undertorque Detection is only active during Speed Agree and operation continues after detection). 6: UL4 at RUN - Alarm (Undertorque Detection is always active and operation continues after detection). 7: UL4 at Speed Agree - Fault (Undertorque Detection only active during Speed Agree and Drive output will shut down on an OL4 fault). 8: UL4 at RUN - Fault (Undertorque Detection is always active and Drive output will shut down on an OL4 fault).	0 to 8	0	No	A	A	A	A	A
L6-05	Torque Detection Level 2 Torq Det 2 Lvl	Sets the Overtorque/Undertorque detection level as a percentage of Drive rated current or torque for Torque Detection 2. Current detection for A1-02 = 0 or 1. Torque detection for A1-02 = 2 or 3.	0 to 300	150%	No	A	A	A	A	A

Parameter Number	Name: Display	Description	Setting Range	Factory Setting	Change during Operation	Control Methods: V/f	V/f with PG	Open Loop Vector 1	Flux Vector	Open Loop Vector 2
L6-06	Torque Detection Time 2 Torq Det 2 Time	Sets the length of time an Overtorque/Undertorque condition must exist before torque detection 2 is recognized by the Drive.	0.0 to 10.0	0.1sec	No	A	A	A	A	A

Multi-function Output (H2-01 to H2-05)

Setting Value	Function	Control Methods: V/f	V/f with PG	Open Loop Vector 1	Flux Vector	Open Loop Vector 2
B	Overtorque/undertorque detection 1 NO (NO contact: Overtorque/undertorque detection at ON)	Yes	Yes	Yes	Yes	Yes
17	Overtorque/undertorque detection 1 NC (NC Contact: Torque detection at OFF)	Yes	Yes	Yes	Yes	Yes
18	Overtorque/undertorque detection 2 NO (NO Contact: Torque detection at ON)	Yes	Yes	Yes	Yes	Yes
19	Overtorque/undertorque detection 2 NC (NC Contact: Torque detection at OFF)	Yes	Yes	Yes	Yes	Yes

■L6-01 and L6-04 Set Values and LCD Indications

The relationship between alarms displayed by the Digital Operator when overtorque or undertorque is detected, and the set values in L6-01 and L6-04, is shown in the following table.

Set Value	Function	LCD Indications: Overtorque/ Undertorque Detection 1	Overtorque/ Undertorque Detection 2
0	Overtorque/undertorque detection disabled.	-	-
1	Overtorque detection only with speed matching; operation continues after overtorque (warning).	OL3 flashes	OL4 flashes
2	Overtorque detected continuously during operation; operation continues after overtorque (warning).	OL3 flashes	OL4 flashes
3	Overtorque detection only with speed matching; output stopped upon detection (protected operation).	OL3 lit	OL4 lit
4	Overtorque detected continuously during operation; output stopped upon detection (protected operation).	OL3 lit	OL4 lit
5	Undertorque detection only with speed matching; operation continues after overtorque (warning).	UL3 flashes	UL4 flashes
6	Undertorque detected continuously during operation; operation continues after overtorque (warning).	UL3 flashes	UL4 flashes
7	Undertorque detection only with speed matching; output stopped upon detection (protected operation).	UL3 lit	UL4 lit
8	Undertorque detected continuously during operation; output stopped upon detection (protected operation).	UL3 lit	UL4 lit

■Setting Example

The following diagram shows the time chart for overtorque and undertorque detection.

- Overtorque Detection

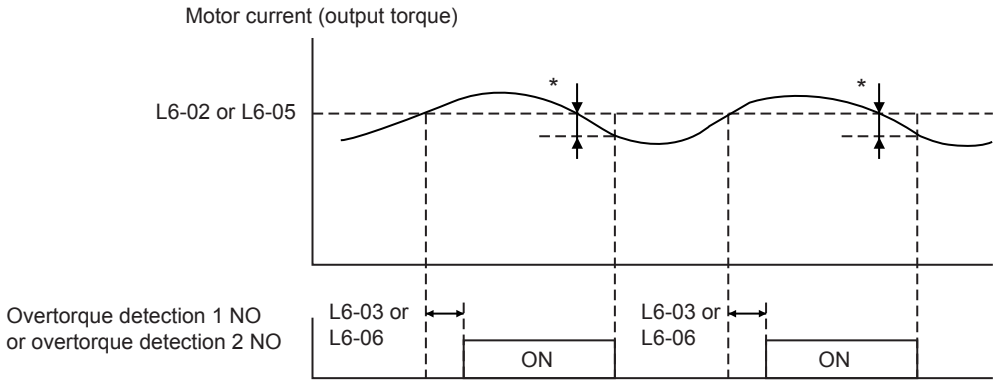

* Overtorque detection disabled band is approximately 10% of the Inverter rated output current (or motor rated torque).

- Undertorque Detection

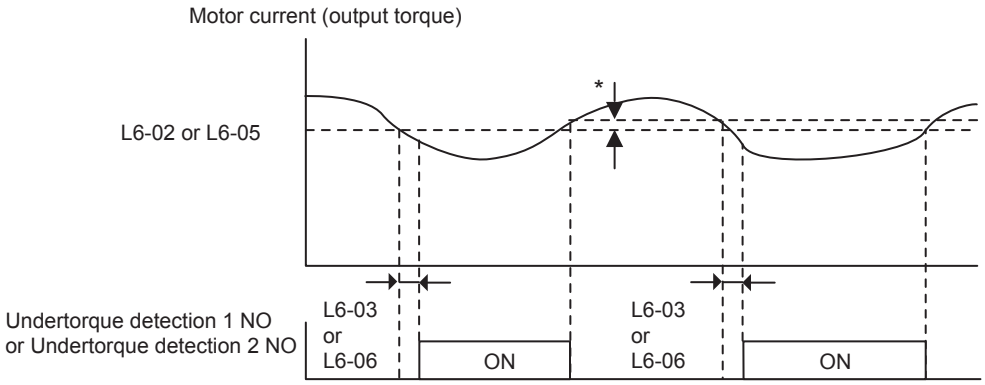

* The undertorque detection disabled margin is approximately 10% of the Inverter rated output current (or motor rated torque)

◆ Changing Overtorque and Undertorque Detection Levels Using an Analog Input

If you set parameter H3-09 (Multi-function Analog Input Terminal A2 Function Selection) or H3-05 (Multi-function Analog Input Terminal A3 Function Selection) to 7 (overtorque/undertorque detection level), you can change the overtorque/undertorque detection level.

If you change the overtorque/undertorque detection level using the multi-function analog input, only overtorque/undertorque detection level 1 will be enabled.

The following diagram shows the overtorque/undertorque detection level using an analog input.

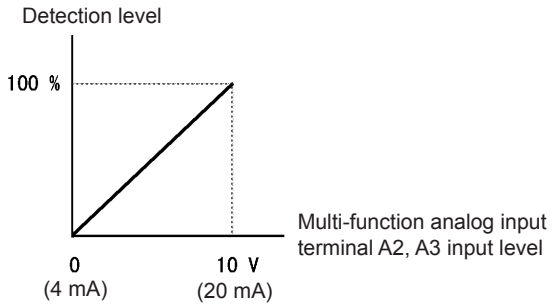

Fig 6.38 Overtorque/Undertorque Detection Level Using an Analog Input

Multi-Function Analog Input (H3-05, H3-09)

Setting Value	Function	Contents (100%)	Control Methods				
			V/f	V/f with PG	Open Loop Vector 1	Flux Vector	Open Loop Vector 2
7	Overtorque/undertorque detection level	Motor rated torque for vector control Drive rated output current for V/f control	Yes	Yes	Yes	Yes	Yes

◆ Motor Overload Protection

You can protect the motor from overload using the Drive's built-in electronic thermal overload relay.

■Related Parameters

Parameter Number	Name: Display	Description	Setting Range	Factory Setting	Change during Operation	Control Methods: V/f	V/f with PG	Open Loop Vector 1	Flux Vector	Open Loop Vector 2
E2-01	Motor Rated Current / Motor Rated FLA	Sets the motor nameplate full load current in amperes (A). This value is automatically set during Auto-Tuning.	0.32 to 6.40 *2	1.90 A *1	No	Q	Q	Q	Q	Q
E4-01	Motor 2 Rated Current / Motor Rated FLA	Sets the motor 2 name plate full load current in amperes (A). This value is automatically set during Auto-Tuning.	0.32 to 6.40 *2	1.90 A *1	No	A	A	A	A	A
L1-01	Motor Overload Protection Selection / MOL Fault Select	Sets the motor thermal overload protection (OL1) based on the cooling capacity of the motor. 0: Disabled 1: Standard Fan Cooled (< 10:1 motor) 2: Standard Blower Cooled (≤10:1 motor) 3: Vector Motor (≤1000:1 motor)In some applications when the Drive power supply is turned off, the thermal value is reset, so even if this parameter is set to 1, protection may not be effective. When several motors are connected to one Drive, set to 0 and ensure that each motor is installed with a protection device.	0 to 3	1	No	Q	Q	Q	Q	Q
L1-02	Motor Overload Protection Time / MOL Time Const	Sets the motor thermal overload protection (OL1) time. A larger L1-02 time will increase the time before an OL1 fault will occur.	0.1 to 5.0	1.0 min	No	A	A	A	A	A

* 1. Factory settings will vary based on drive capacity (values given here are for 200-240V class, 0.4kW).
* 2. Setting range is 10% to 200% of the drive's rated output current (values given here are for 200-240V class, 0.4kW).

Multi-Function Outputs (H2-01 to H2-05)

Setting Value	Function	Control Methods: V/f	V/f with PG	Open Loop Vector 1	Flux Vector	Open Loop Vector 2
1F	Motor overload (OL1, including OH3) pre-alarm (ON: 90% or more of the detection level)	Yes	Yes	Yes	Yes	Yes

■Setting Motor Rated Current

Set the rated current value on the motor nameplate in parameters E2-01 (for motor 1) and E4-01 (for motor 2). This set value is the electronic thermal base current.

■Setting Motor Overload Protection Characteristics

Set the overload protection function in L1-01 according to the applicable motor.

The induction motor's cooling abilities differ according to the speed control range. Consequently, you must select the electronic thermal protection characteristics to match the applicable motor's tolerance load characteristics.

The following table shows the motor type and tolerance load characteristics.

L1-01 Set Value	Motor Type	Tolerance Load Characteristics	Cooling Ability	Electronic Thermal Operation (at 100% Motor Load)
1	General-purpose motor (standard motor)	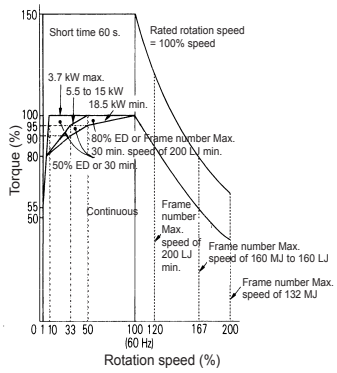	Use this motor for operations using a commercial power supply. This motor construction yields best cooling effect when operating at 50/60 Hz.	When operating continuously at 50/60Hz or less, motor overload detection (OL1) is detected. The Drive outputs the error contact, and the motor coasts to a stop.
2	Drive motor (constant torque) (1:10)	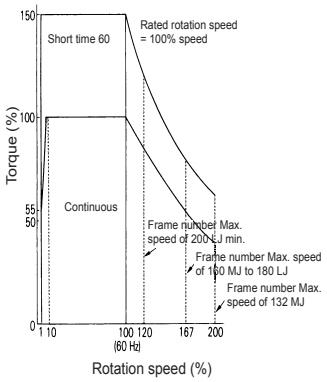	This motor yields a cooling effect even when operating at low speeds (approx. 6 Hz).	Operates continuously at 6 to 50/60Hz.
3	Vector motor (1:100)	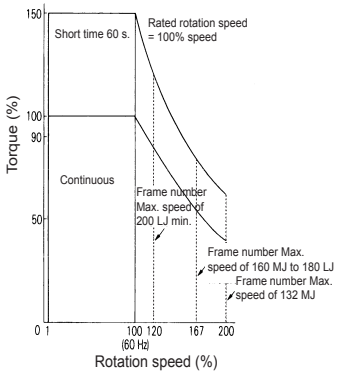	This motor yields a cooling effect even when operating at extremely low speeds (approx. 0.6Hz).	Operates continuously at 0.6 to 60Hz.

◆ Setting Motor Protection Operation Time

Set the motor protection operation time in L1-02.

If, after operating the motor continuously at the rated current, a 150% overload is experienced, set the (hot start) electronic thermal protection operation time. The factory setting is resistance to 150% for 60 seconds.

The following diagram shows an example of the characteristics of the electronic thermal protection operation time (L1-02 = 1.0 min., operation at 60Hz, general-purpose motor characteristics, when L1-01 is set to 1)

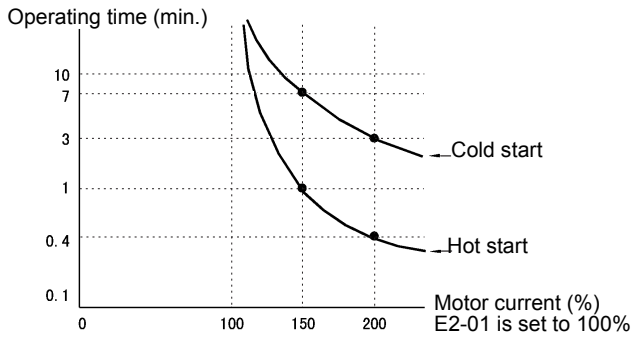

Fig 6.39 Motor Protection Operation Time

■Setting Precautions

- If multiple motors are connected to one Drive, set parameter L1-01 to 0 (disabled). To protect the motor, install a thermal relay in the motor power cable, and perform overload protection on each motor.
- With applications where the power supply is often turned ON and OFF, there is a risk that the circuit cannot be protected even if this parameter has been set to 1 (enabled), because the thermal value will be reset.
- To detect overloads in good time, set the set value in parameter L1-02 to a low setting.
- When using a general-purpose motor (standard motor), the cooling ability will be lowered by $f^{1/4}$ (frequency). Consequently, the frequency may cause motor overload protection (OL1) to occur, even below the rated current. If operating using the rated current at a low frequency, use a special motor.

■Setting the Motor Overload Pre-Alarm

If the motor overload protection function is enabled (i.e., L1-01 is set to other than 0) and you set H2-01 to H2-05 (multi-function output terminals M1-M2, M3-M4, M5-M6, P3-C3, and P4-C4 function selection) to 1F (motor overload OL1 pre-alarm), the motor overload pre-alarm will be enabled. If the electronic thermal value reaches minimum 90% of the overload detection level, the output terminal that has been set will be turned ON.

◆ Motor Overheating Protection Using PTC Thermistor Inputs

Perform motor overheating protection using the thermistor temperature resistance characteristics of the PTC (Positive Temperature Coefficient) built into the windings of each motor phase.

■Related Parameters

Parameter Number	Name / Display	Description	Setting Range	Factory Setting	Change during Operation	Control Methods				
						V/f	V/f with PG	Open Loop Vector 1	Flux Vector	Open Loop Vector 2
L1-03	Motor Overheat Alarm Operation Selection MOL Thm Input	Sets operation selection when the motor temperature analog input (H3-09 = E) exceeds the OH3 alarm level (1.17V) 0: Ramp to Stop 1: Coast to Stop 2: Fast-Stop 3: Alarm Only	0 to 3	3	No	A	A	A	A	A
L1-04	Motor Overheat Fault Operation Selection MOL Filter Time	Sets stopping method when the motor temperature analog input (H3-09 = E) exceeds the OH4 fault level (2.34V). 0: Ramp to Stop 1: Coast to Stop 2: Fast-Stop	0 to 2	1	No	A	A	A	A	A
L1-05	Motor Temperature Input Filter Time MOL Filter Time	This parameter adjusts the filter on the motor temperature analog input (H3-09 = E). Increase to add stability, decrease to improve response.	0.00 to 10.00	0.20sec	No	A	A	A	A	A

■PTC Thermistor Characteristics

The following diagram shows the characteristics of the PTC thermistor temperature to the resistance value.

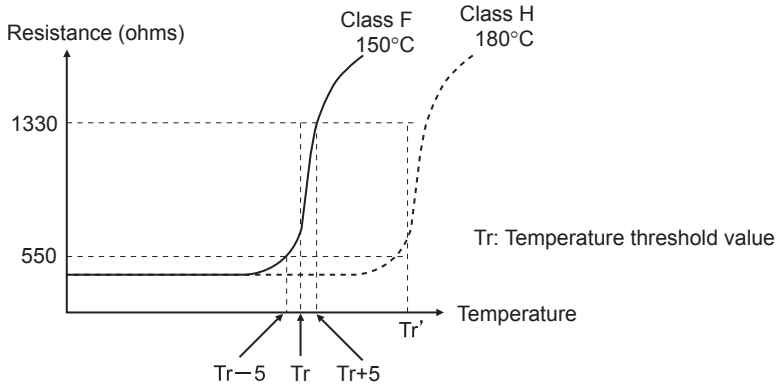

Fig 6.40 PTC Thermistor Temperature-Resistance Value Characteristics

■Operation during Motor Overheating

Set the operation if the motor overheats in parameters L1-03 and L1-04. Set the motor temperature input filter time parameter in L1-05. If the motor overheats, the OH3 and OH4 error codes will be displayed on the Digital Operator.

Error Codes If the Motor Overheats

Error Code	Details
OH3	Drive stops or continues to operate, according to the setting in L1-03.
OH4	Drive stops according to the setting in L1-04.

By setting H3-09 (Multi-function Analog Input Terminal A2 Function Selection) or H3-05 (Multi-function Analog Input Terminal A3 Function Selection) to E (Motor temperature input), you can detect alarm OH3 or OH4 using the PTC temperature-resistance characteristics, and protect the motor. The terminal connections are shown in the following diagram.

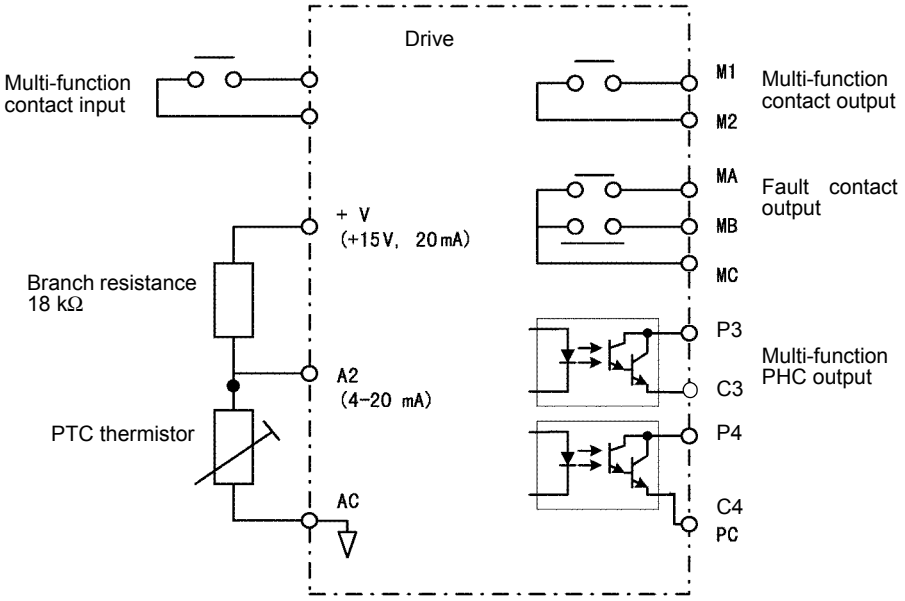

Fig 6.41 Mutual Connections During Motor Overheating Protection

◆ Limiting Motor Rotation Direction

If you set motor reverse rotation prohibited, a reverse run command will not be accepted even if it is input. Use this setting for applications in which reverse motor rotation can cause problems (e.g., fans, pumps, etc.)

■Related Parameters

Parameter Number	Name	Description	Setting Range	Factory Setting	Change during Operation	Control Methods				
	Display					V/f	V/f with PG	Open Loop Vector 1	Flux Vector	Open Loop Vector 2
b1-04	Reverse Operation Selection Reverse Oper	Determines the forward rotation of the motor, and if reverse operation is disabled. 0: Reverse enabled. 1: Reverse disabled.	0 to 1	0	No	A	A	A	A	A

Continuing Operation

This section explains functions for continuing or automatically restarting Drive operation even if an error occurs.

◆ Restarting Automatically After Power Is Restored

Even if a temporary power loss occurs, you can restart the Drive automatically after power is restored to continue motor operation.

To restart the Drive after power is restored, set L2-01 to 1 or 2.

If L2-01 is set to 1, when power is restored within the time set in L2-02, the Drive will restart. If the time set in L2-02 is exceeded, alarm UV1 (main circuit undervoltage) will be detected.

If L2-01 is set to 2, when the main power supply is restored while the control power supply (i.e., power supply to the control panel) is backed up, the Drive will restart. Consequently, alarm UV1 (main circuit undervoltage) will not be detected.

■Related Parameters

Parameter Number	Name: Display	Description	Setting Range	Factory Setting	Change during Operation	Control Methods: V/f	V/f with PG	Open Loop Vector 1	Flux Vector	Open Loop Vector 2
L2-01	Momentary Power Loss Detection Selection PwrL Selection	Enables and disables the momentary power loss function. 0: Disabled - Drive trips on (UV1) fault when power is lost. 1: Power Loss Ride Thru Time - Drive will restart if power returns within the time set in L2-02.*1 2: CPU Power Active - Drive will restart if power returns prior to control power supply shut down.*1	0 to 2	0	No	A	A	A	A	A
L2-02	Momentary Power Loss Ride-thru Time PwrL Ridethru t	Sets the power loss ride-thru time. This value is dependent on the capacity of the Drive. Only effective when L2-01 = 1.	0 to 25.5	0.1sec *2	No	A	A	A	A	A
L2-03	Momentary Power Loss Minimum Base Block Time PwrL Baseblock t	Sets the minimum time to wait to allow the residual motor voltage to decay before the Drive output turns back on during power loss ride thru. After a power loss, if L2-03 is greater than L2-02, operation resumes after the time set in L2-03.	0.1 to 5.0	0.2sec *2	No	A	A	A	A	A
L2-04	Momentary Power Loss Voltage Recovery Ramp Time PwrL V/F Ramp t	Sets the time it takes the output voltage to return to the preset V/f pattern after speed search (current detection mode) is complete.	0.0 to 5.0	0.3sec *2	No	A	A	A	A	A
L2-05	Undervoltage Detection Level PUV Det Level	Sets the Drive's DC Bus undervoltage trip level. If this is set lower than the factory setting, additional AC input reactance or DC bus reactance may be necessary. Consult the factory before changing this parameter setting.	150 to 210 *3	190Vdc *3	No	A	A	A	A	A

*1 In order for a restart to occur, the run command must be maintained throughout the ride thru period.
*2 Factory settings will vary based on drive capacity (values given here are for 200-240V class, 0.4kW).
*3 Setting value for 200-240V class. Double the value when working with 380-480V class drives

■Setting Precautions

- Error output signals are not output during momentary power loss recovery.
- To continue Drive operation after power has been restored, make settings so that run commands from the control main circuit terminal are stored even while power is suspended.
- If the momentary power loss operation selection is set to 0 (Disabled), when the momentary power loss exceeds 15ms during operation, alarm UV1 (main circuit undervoltage) will be detected.

◆ Speed Search

The speed search function finds the actual speed of the motor that is rotating using inertia, and then starts smoothly from that speed. When restoring power after a temporary power loss, the speed search function switches connection from the commercial power supply, and then restarts the fan that is rotating using inertia.

■Related Parameters

Parameter Number	Name: Display	Description	Setting Range	Factory Setting	Change during Operation	Control Methods: V/f	V/f with PG	Open Loop Vector 1	Flux Vector	Open Loop Vector 2
b3-01	Speed search selection (current detection or speed calculation) SpdSrch at Start	Enables/disables the speed search function for the run command and sets the speed search method. 0:Disabled, speed calculation 1: Enabled, speed calculation 2: Disabled, current detection 3: Enabled, current detection Speed Calculation: When the search is started, the motor speed is calculated and acceleration/deceleration is performed from the calculated speed to the specified frequency (motor direction is also searched). Current Detection: The speed search is started from the frequency when power was momentarily lost and the maximum frequency, and the speed is detected at the search current level.	0 to 3	2*1	No	A	A	A	No	A
b3-02	Speed search operating current (current detection) SpdSrch Current	Sets the speed search operation current as a percentage, taking the Drive rated current as 100%. Not usually necessary to set. When restarting is not possible with the factory settings, reduce the value.	0 to 200	100%*2	No	A	No	A	No	A
b3-03	Speed search deceleration time (current detection) SpdSrch Dec Time	Sets the output frequency deceleration time during speed search in 1-second units. Set the time for deceleration from the maximum output frequency to the minimum output frequency.	0.1 to 10.0	2.0sec	No	A	No	A	No	No
b3-05	Speed search wait time (current detection or speed calculation) Search Delay	Sets the contactor operating delay time when there is a contactor on the output side of the Drive. When a speed search is performed after recovering from a momentary power loss, the search operation is delayed by the time set here.	0.0 to 20.0	0.2sec	No	A	A	A	A	A

Parameter Number	Name	Description	Setting Range	Factory Setting	Change during Operation	Control Methods				
	Display					V/f	V/f with PG	Open Loop Vector 1	Flux Vector	Open Loop Vector 2
L2-03	Min. base-block time PwrL Base-block t	Sets the Drive's minimum base-block time in units of one second, when the Drive is restarted after power loss ridethrough. Sets the time to approximately 0.7 times the motor secondary circuit time parameter. When an overcurrent or overvoltage occurs when starting a speed search or DC injection braking, increase the set values.	0.1 to 5.0	0.5sec *3	No	A	A	A	A	A
L2-04	Voltage recovery time PwrL V/F Ramp t	Sets the time required to return the Drive output voltage to normal voltage at the completion of a speed search, in units of one second. Sets the time required to recover from 0Vto the maximum voltage.	0.0 to 5.0	0.3sec *3	No	A	A	A	A	A

* 1. The factory setting will change when the control method is changed (Open-loop vector control 1 factory settings are given).
* 2. The factory setting will change when the control method is changed. Set to “3” in V/f with PG.
* 3. Factory settings depend on Drive capacity (The values shown are for a 200-240V Class Drive for 0.4kW).

Multi-function Contact Inputs (H1-01 to H1-10)

Setting Value	Function	Control Methods				
		V/f	V/f with PG	Open Loop Vector 1	Flux Vector	Open Loop Vector 2
61	External search command 1 (ON: Speed search from maximum output frequency)	Yes	No	Yes	No	Yes
62	External search command 2 (ON: Speed search from set frequency)	Yes	No	Yes	No	Yes

■Setting Precautions

- When both external search commands 1 and 2 are set for the multi-function contact terminals, an OPE03 (invalid multi-function input selection) operation error may occur. Set either external search command 1 or external search command 2.
- If speed search during startup is selected when using V/f control with PG, the Unit will start from the frequency detected by PG.
- If performing speed search using external search commands, add an external sequence so that the period when the run command and external search command are both ON is at the very least the Minimum Baseblock Time (L2-03).
- If the Drive output is equipped with a contact, set the contact operation delay time in the Speed Search Wait Time (b3-05). The factory setting is 0.2 s. When not using the contact, you can reduce the search time by making the setting 0.0 s. After waiting for the speed search wait time, the Drive starts the speed search.
- Parameter b3-02 is a current detection speed search (current detection level for search completion). When the current falls below the detection level, the speed search is viewed as completed, and the motor accelerates or decelerates to the set frequency. If the motor cannot restart, lower the set value.
- If an overcurrent (OC) is detected when using speed search after recovery following a power loss, lengthen the Minimum Baseblock Time (L2-03).

■Application Precautions for Speed Searches Using Estimated Speed

- When using V/f control with or without a PG, always perform stationary autotuning for only line-to-line resistance before using speed searches based on estimated speeds.
- When using open-loop vector control, always perform rotational autotuning before using speed searches based on estimated speeds.
- If the cable length between the motor and Drive is changed after autotuning has been performed, perform stationary autotuning for only line-to-line resistance again.

IMPORTANT

The motor will not operate when stationary autotuning or stationary autotuning only for line-to-line resistance is performed.

■Speed Search Selection

Set whether to enable or disable speed search at startup, and set the type of speed search (estimated speed or current detection) using setting b3-01. To perform speed search when inputting the run command, set b3-01 to 1 or 3.

Search Name	Estimated Speed	Current Detection
Search Method	Estimates the motor speed when the search starts, and accelerates and decelerates from the estimated speed to the set frequency. You can also search including direction of motor rotation.	Starts speed search from the frequency when the temporary power loss was detected, or from the highest frequency, and performs speed detection at the current level during the search.
External Speed Search Command	External search command 1 and external search command 2 become the same operation, estimating the motor speed and starting the search from the estimated speed.	External speed search command 1: Starts speed search from the maximum output frequency. External speed search command 2: Starts speed search from the frequency reference set before the search command.
Application Precautions	Cannot be used multi-motor drives, motors two or more frames smaller than the Drive capacity, and high-speed motors (130Hz min.)	In control method without PG, the motor may accelerate suddenly with light loads.

■Estimated Speed Search

The time chart for estimated speed searches is shown below.

Search at Startup

The time chart for when speed search at startup and speed search to multi-function input terminals us shown below.

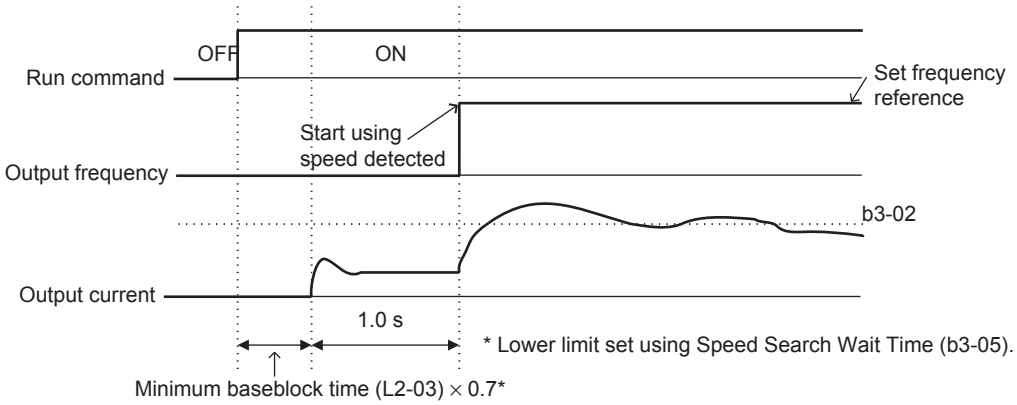

Note: If the stopping method is set to coast to stop, and the run command turns ON in a short time, the operation may be the same as the search in case 2.

Fig 6.42 Speed Search at Startup (Estimated Speed)

Speed Search after Short Baseblock (during Power Loss Recovery, etc.)

- Loss Time Shorter Than the Minimum Baseblock Time (L2-03)

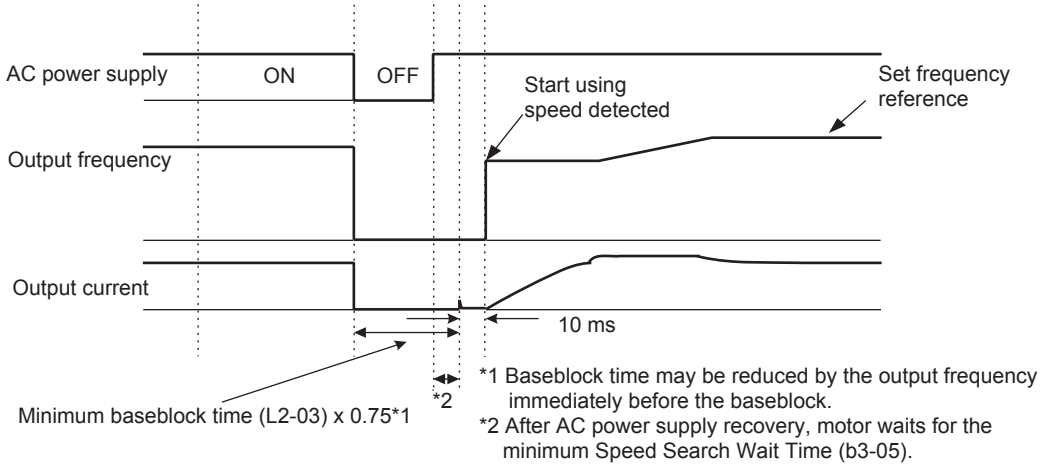

Fig 6.43 Speed Search after Baseblock (When Estimated Speed: Loss Time Is Set in L2-03)

- Loss Time Longer Than the Minimum Baseblock Time (L2-03)

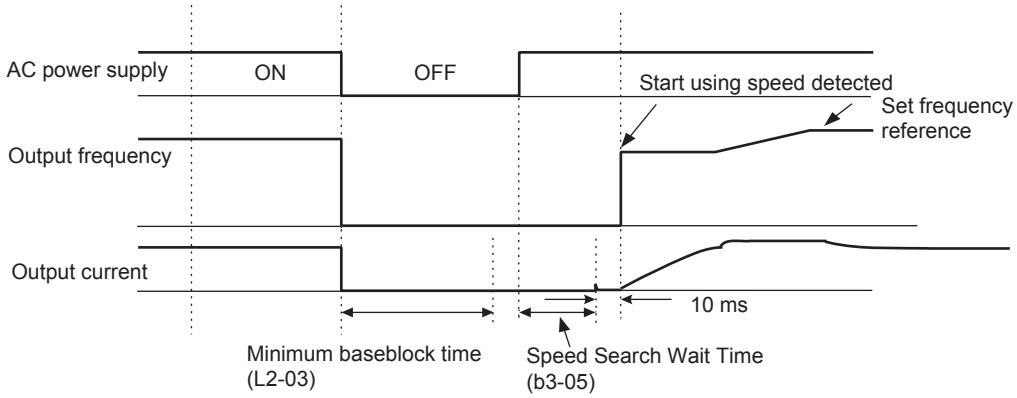

Fig 6.44 Speed Search After Baseblock (Estimated Speed: Loss Time > L2-03)

■Current Detection Speed Search

The time charts for current detection speed search is shown below.

Speed Search at Startup

The time chart when speed search at startup or external speed search command is selected is shown below.

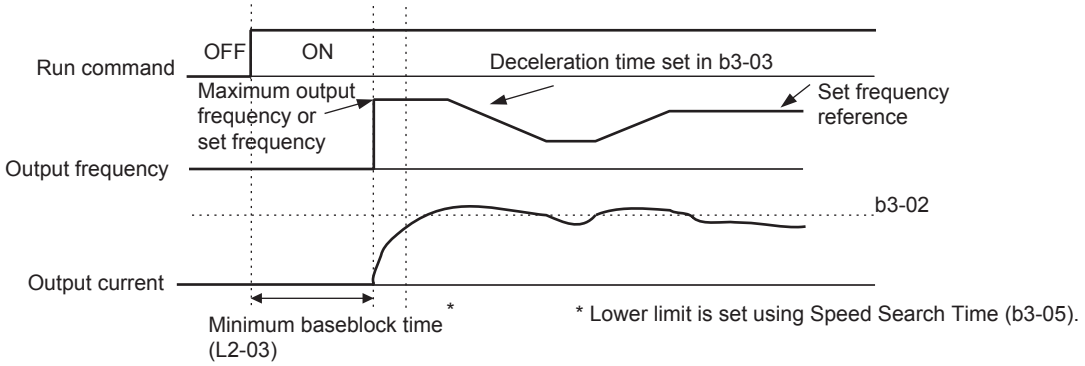

Fig 6.45 Speed Search at Startup (Using Current Detection)

Speed Search after Short Baseblock (during Power Loss Recovery, etc.)

- Loss Time Shorter Than Minimum Baseblock Time

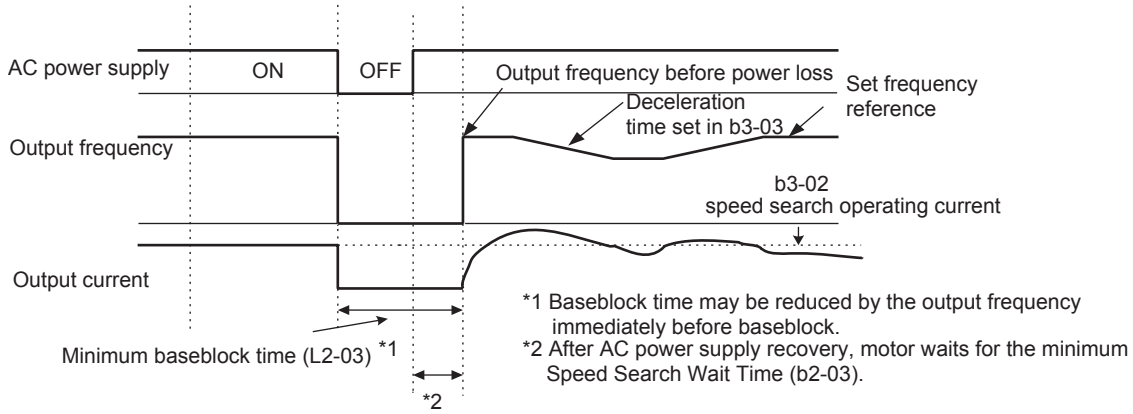

Fig 6.46 Speed Search After Baseblock (Current Detection: Loss Time < L2-03)

- Loss Time Longer Than Minimum Baseblock Time

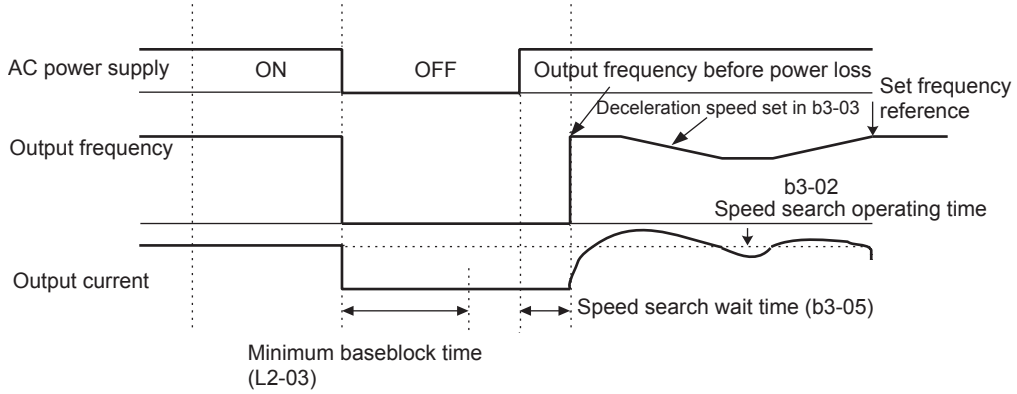

Fig 6.47 Speed Search After Baseblock (Current Detection: Loss Time > L2-03)

◆ Continuing Operation at Constant Speed When Frequency Reference Is Lost

The frequency reference loss detection function continues operation using 80% speed of the frequency reference before loss when the frequency reference using an analog input is reduced 90% or more in 400ms.

When the error signal during frequency reference loss is output externally, set H2-01 to H2-05 (multi-function contact output terminal M1-M2, M3-M4, M5-M6, P3-C3, and P4-C4 function selection) to C (frequency reference lost).

■Related Parameters

Parameter Number	Name	Description	Setting Range	Factory Setting	Change during Operation	Control Methods				
	Display					V/f	V/f with PG	Open Loop Vector 1	Flux Vector	Open Loop Vector 2
L4-05	Frequency Reference Loss Detection Selection Ref Loss Sel	Determines how the Drive will react when the frequency reference is lost. The frequency reference is considered lost when reference drops 90% or more of its current value for 400ms. 0: Stop - Drive will stop. 1: Run at L4-06 PrevRef - Drive will run at the percentage set in L4-06 of the frequency reference level at the time frequency reference was lost.	0 to 1	0	No	A	A	A	A	A

◆ Restarting Operation After Transient Error (Auto Restart Function)

If a Drive error occurs during operation, the Drive will perform self-diagnosis. If no error is detected, the Drive will automatically restart. This is called the auto restart function.

Set the number of auto restarts in parameter L5-01.

The auto restart function can be applied to the following errors. If an error not listed below occurs, the protection function will operate and the auto restart function will not.

- OC (Overcurrent)
- GF (Ground fault)
- PUF (Fuse blown)
- OV (Main circuit overvoltage)
- UV1 (Main Circuit Undervoltage, Main Circuit MC Operation Failure)*
- PF (Main circuit voltage fault)
- LF (Output phase failure)
- RH (Braking resistor overheated)
- RR (Braking transistor error)
- OL1 (Motor overload)
- OL2 (Drive overload)
- OH1 (Motor overheat)
- OL3 (Overtorque)
- OL4 (Overtorque)

* When L2-01 is set to 1 or 2 (continue operation during momentary power loss)

■Auto Restart External Outputs

To output auto restart signals externally, set H2-01 to H2-05 (multi-function contact output terminals M1-M2, M3-M4, M5-M6, P3-C3, and P4-C4 function selection) to 1E (auto restart).

■Related Parameters

Parameter Number	Name: Display	Description	Setting Range	Factory Setting	Change during Operation	Control Methods: V/f	V/f with PG	Open Loop Vector 1	Flux Vector	Open Loop Vector 2
L5-01	Number of Auto Restart Attempts / Num of Restarts	Sets the counter for the number of times the Drive will perform an automatic restart on the following faults: GF, LF, OC, OV, PF, PUF, RH, RR, OL1, OL2, OL3, OL4, UV1. Auto restart will check to see if the fault has cleared every 5ms. When no fault is present, the Drive will attempt an auto restart. If the Drive faults after an auto restart attempt, the counter is incremented. When the Drive operates without fault for 10 minutes, the counter will reset to the value set in L5-01.	0 to 10	0	No	A	A	A	A	A
L5-02	Auto Restart Operation Selection / Restart Sel	Determines if the fault contact activates during an automatic restart attempt. 0: No Fault Relay - fault contact will not activate during an automatic restart attempt. 1: Fault Relay Active - fault contact will activate during an automatic restart attempt.	0 to 1	0	No	A	A	A	A	A

■ Application Precautions

- The number of auto restarts count is reset under the following conditions:
  - After auto restart, normal operation has continued for 10 minutes.
  - After the protection operation has been performed, and the error has been verified, and an fault reset has been input.
  - After the power supply is turned OFF, and then ON again.
- Do not use the auto restart function with variable loads.

Drive Protection

This section explains the functions for protecting the Drive and the braking resistor.

◆ Performing Overheating Protection on Mounted Braking Resistors

Perform overheating protection on Drive-mounted braking resistors (Model: ERF-150WJ □□).

When overheating in a mounted braking resistor is detected, an alarm RH (Mounted braking resistor overheating) is displayed on the Digital Operator, and the motor coasts to a stop.

■Related Parameters

Parameter Number	Name: Display	Description	Setting Range	Factory Setting	Change during Operation	Control Methods: V/f	V/f with PG	Open Loop Vector 1	Flux Vector	Open Loop Vector 2
L8-01	Internal Dynamic Braking Resistor Protection Selection DB Resistor Prot	Selects the DB protection only when using 3% duty cycle heatsink mount Yaskawa braking resistor. This parameter does not enable or disable the DB function of the Drive. 0: Not Provided 1: Provided	0 to 1	0	No	A	A	A	A	A

Multi-function Contact Outputs (H2-01 to H2-05)

Setting Value	Function	Control Methods: V/f	V/f with PG	Open Loop Vector 1	Flux Vector	Open Loop Vector 2
D	Braking resistor fault (ON: Resistor overheat or braking transistor fault)	Yes	Yes	Yes	Yes	Yes

INFO

The most likely causes of RH (Mounted braking resistor overheating) being detected are that the deceleration time is too short or that the motor regeneration energy is too large. In these cases, lengthen the deceleration time or replace the Braking Resistor Unit with one with a higher breaking capacity.

◆ Reducing Drive Overheating Pre-Alarm Warning Levels

The Drive detects the temperature of the cooling fins using the thermistor, and protects the Drive from overheating. You can receive Drive overheating pre-alarms in units of 10°C.

The following overheating pre-alarm warnings are available: Stopping the Drive as error protection, and continuing operation, with the alarm OH (Radiation fins overheating) on the Digital Operator flashing.

■Related Parameters

Parameter Number	Name: Display	Description	Setting Range	Factory Setting	Change during Operation	Control Methods: V/f	V/f with PG	Open Loop Vector 1	Flux Vector	Open Loop Vector 2
L8-02	Overheat Alarm Level OH Pre-Alarm Lvl	When the cooling fin temperature exceeds the value set in this parameter, an Overheat Alarm (OH) will occur.	50 to 130	95 °C*	No	A	A	A	A	A
L8-03	Overheat Pre-Alarm Operation Selection OH Pre-Alarm Sel	Selects the Drive operation upon an OH pre-alarm detection. 0: Ramp to Stop 1: Coast to Stop 2: Fast-Stop 3: Alarm Only	0 to 3	3	No	A	A	A	A	A

* Factory settings will vary based on drive capacity.

Input Terminal Functions

This section explains input terminal functions, which set operating methods by switching functions for the multi-function contact input terminals (S3 to S12).

◆ Temporarily Switching Operation between Digital Operator and Control Circuit Terminals

You can switch the Drive run command inputs and frequency reference inputs between local (i.e., Digital Operator) and remote (input method using b1-01 and b1-02).

You can switch between local and remote by turning ON and OFF the terminals if an output from H1-01 to H1-10 (multi-function contact input terminal S3 to S12 function selection) has been set to 1 (local/remote selection).

To set the control circuit terminals to remote, set b1-01 and b1-02 to 1 (Control circuit terminals).

■Related Parameters

Parameter Number	Name: Display	Description	Setting Range	Factory Setting	Change during Operation	Control Methods: V/f	V/f with PG	Open Loop Vector 1	Flux Vector	Open Loop Vector 2
b1-01	Frequency Reference Selection Reference Source	Selects the frequency reference input source. 0: Operator - Digital preset speed U1-01 or d1-01 to d1-17. 1: Terminals - Analog input terminal A1 (or terminal A2 based on parameter H3-09). 2: Serial Com - Modbus RS-422/485 terminals R+, R-, S+, and S-. 3: Option PCB - Option board connected on 2CN. 4: Pulse Input (Terminal RP)	0 to 4	1	No	Q	Q	Q	Q	Q
b1-02	Run Command Selection Run Source	Selects the run command input source. 0: Operator - RUN and STOP keys on Digital Operator. 1: Terminals - Contact closure on terminals S1 or S2. 2: Serial Com - Modbus RS-422/485 terminals R+, R-, S+, and S-. 3: Option PCB - Option board connected on 2CN.	0 to 3	1	No	Q	Q	Q	Q	Q

INFO

You can also perform local/remote switching using the LOCAL/REMOTE Key on the Digital Operator. When the local/remote function has been set in the external terminals, the LOCAL/REMOTE Key function on the Digital Operator will be disabled.

◆ Blocking Drive Outputs (Baseblock Commands)

Set 8 or 9 (Baseblock command NO/NC) in one of the parameters H1-01 to H1-10 (multi-function contact input terminal S3 to S12 function selection) to perform baseblock commands using the terminal's ON/OFF operation, and prohibit Drive output using the baseblock commands.

Clear the baseblock command to restart the operating using speed search from frequency references from the previous baseblock command input.

Multi-function Contact Inputs (H1-01 to H1-10)

Setting Value	Function	Control Methods				
		V/f	V/f with PG	Open Loop Vector 1	Flux Vector	Open Loop Vector 2
8	External baseblock NO (NO contact: Baseblock at ON)	Yes	Yes	Yes	Yes	Yes
9	External baseblock NC (NC contact: Baseblock at OFF)	Yes	Yes	Yes	Yes	Yes

■Time Chart

The time chart when using baseblock commands is shown below.

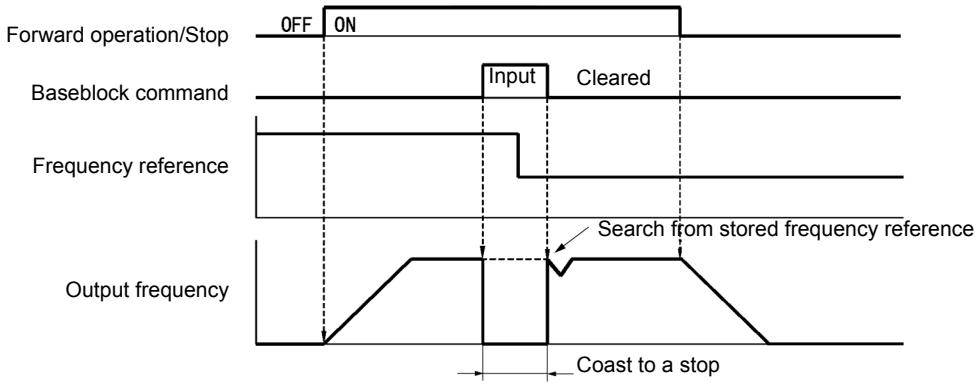

Fig 6.48 Baseblock Commands

IMPORTANT

If using baseblock commands with a variable load, do not frequently input baseblock commands during operation, as this may cause the motor to suddenly start coasting, and may result in the motor falling or slipping.

◆ Stopping Acceleration and Deceleration (Acceleration/Deceleration Ramp Hold)

The acceleration/deceleration ramp hold function stops acceleration and deceleration, stores the output frequency at that point in time, and then continues operation.

Set one of the parameters H1-01 to H1-10 (multi-function contact input terminal S3 to S12 function selection) to A (acceleration/deceleration ramp hold) to stop acceleration and deceleration when the terminal is turned ON and to store the output frequency at that point in time. Acceleration and deceleration will restart when the terminal is turned OFF.

If d4-01 is set to 1 and the Acceleration/Deceleration Ramp Hold command is input, the output frequency is still stored even after the power supply is turned OFF.

■Related Parameters

Parameter Number	Name: Display	Description	Setting Range	Factory Setting	Change during Operation	Control Methods: V/f	V/f with PG	Open Loop Vector 1	Flux Vector	Open Loop Vector 2
d4-01	Frequency Reference Hold Function Selection MOP Ref Memory	This parameter is used to retain the held frequency reference in U1-01 (d1-01) when power is removed. This function is available when the multi-function inputs “accel/decel ramp hold” or “up/down” commands are selected (H1-XX = A or 10 and 11). 0: Disabled 1: Enabled	0 to 1	0	No	A	A	A	A	A

■Time Chart

The time chart when using Acceleration/Deceleration Ramp Hold commands is given below.

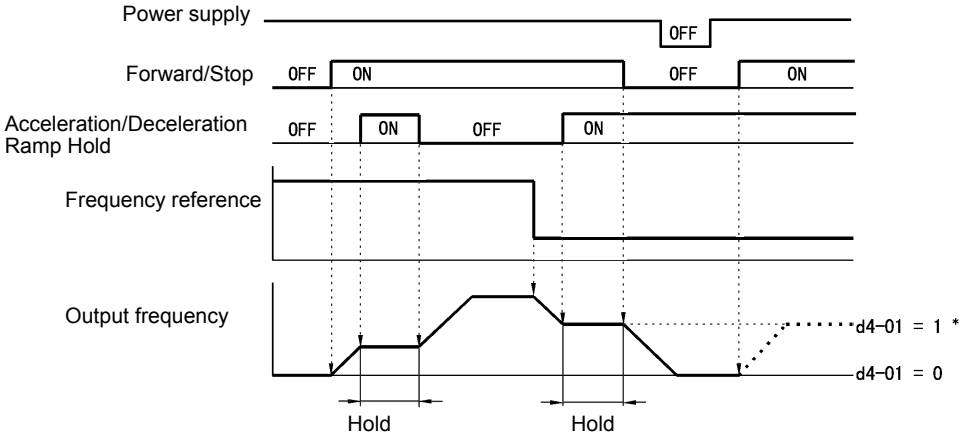

Fig 6.49 Acceleration/Deceleration Ramp Hold

■Application Precautions

- When d4-01 is set to 1, the output frequency on hold is stored even after the power supply is turned OFF. If performing operations using this frequency after the Drive has also been turned OFF, input the run command with the Acceleration/Deceleration Ramp Hold turned ON.
- When d4-01 is set to 0 and a run command is input while the Acceleration/Deceleration Ramp Hold is turned ON, the output frequency will be set to zero.
- If you input an Acceleration/Deceleration Ramp Hold command by error when decelerating during positioning, deceleration may be canceled.

◆ Raising and Lowering Frequency References Using Contact Signals (UP/DOWN)

The UP and DOWN commands raise and lower Drive frequency references by turning ON and OFF a multi-function contact input terminal S3 to S7.

To use this function, set one of the parameters H1-01 to H1-10 (multi-function contact input terminal S3 to S12 function selection) to 10 (UP command) and 11 (DOWN command). Be sure to allocate two terminals so that the UP and DOWN commands can be used as a pair.

The output frequency depends on the acceleration and deceleration time. Be sure to set b1-02 (Run command selection) to 1 (Control circuit terminal).

■Related Parameters

Parameter Number	Name	Description	Setting Range	Factory Setting	Change during Operation	Control Methods				
	Display					V/f	V/f with PG	Open Loop Vector 1	Flux Vector	Open Loop Vector 2
d2-01	Frequency Reference Upper Limit Ref Upper Limit	Determines maximum frequency reference, set as a percentage of maximum output frequency (E1-04). If the frequency reference is above this value, actual Drive speed will be limited to this value. This parameter applies to all frequency reference sources.	0.0 to 110.0	100.0%	No	A	A	A	A	A
d2-02	Frequency Reference Lower Limit Ref Lower Limit		0.0 to 110.0	0.0%	No	A	A	A	A	A
d2-03	Master Speed Reference Lower Limit Ref1 Lower Limit		0.0 to 110.0	0.0%	No	A	A	A	A	A

■Precautions

When setting and using UP and DOWN commands, observe the following precautions.

Setting Precautions

If multi-function input terminals S3 to S12 are set as follows, operation error OPE03 (Invalid multi-function input selection) will occur:

- Only either the UP command or DOWN command has been set.
- UP/DOWN commands and Acceleration/Deceleration Ramp Hold have been allocated at the same time.

Application Precautions

- Frequency outputs using UP/DOWN commands are limited by the frequency reference upper and lower limits set in parameters d2-01 to d2-03. Here, frequency references from analog frequency reference terminal A1 becomes the frequency reference lower limit. If using a combination of the frequency reference from terminal A1 and the frequency reference lower limit set in either parameter d2-02 or d2-03, the larger lower limit will become the frequency reference lower limit.
- If inputting the run command when using UP/DOWN commands, the output frequency accelerates to the frequency reference lower limit.
- When using UP/DOWN commands, multi-step operations are disabled.
- When d4-01 (Frequency Reference Hold Function Selection) is set to 1, the frequency reference held using the UP/DOWN functions is stored even after the power supply is turned OFF. When the power supply is turned ON and the run command is input, the motor accelerates to the frequency reference that has been stored. To reset (i.e., to 0Hz) the stored frequency reference, turn ON the UP or DOWN command while the run command is ON.

■Connection Example and Time Chart

The time chart and settings example when the UP command is allocated to the multi-function contact input terminal S3, and the DOWN command is allocated to terminal S4, are shown below.

Parameter	Name	Set Value
H1-01	Multi-function input (terminal S3)	10
H1-02	Multi-function input (terminal S4)	11

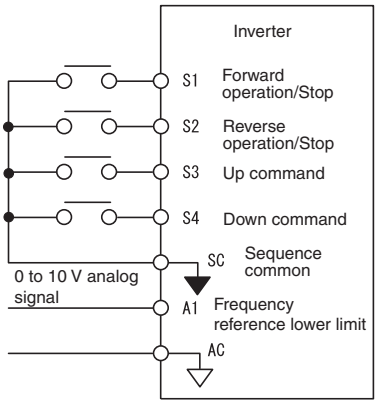

Fig 6.50 Connection Example when UP/DOWN Commands Are Allocated

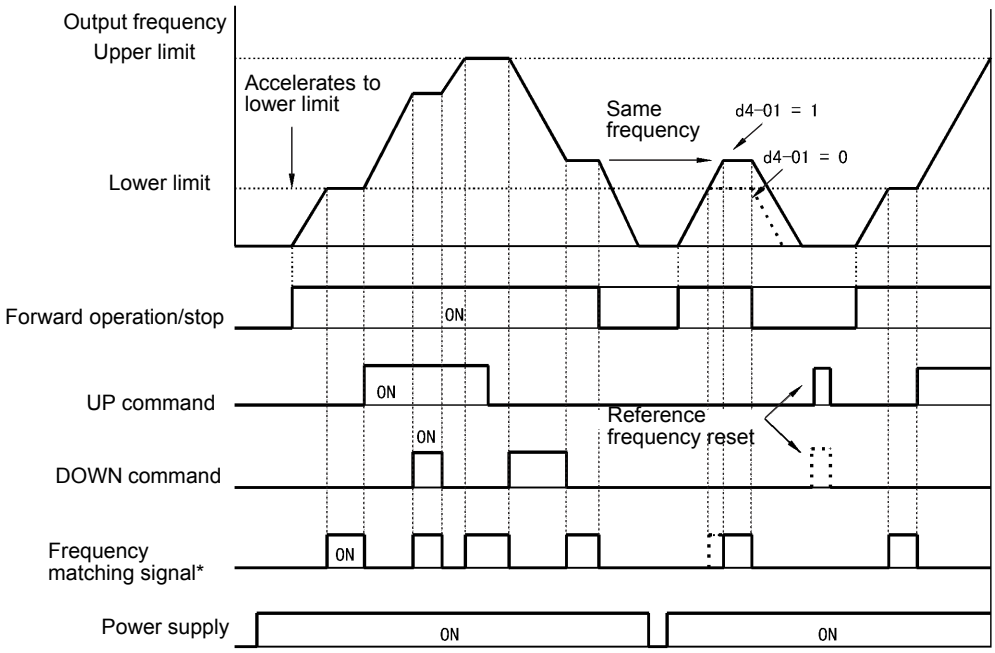

* The frequency matching signal turns ON when the motor is not accelerating/ decelerating while the run command is ON.

Fig 6.51 UP/DOWN Commands Time Chart

◆ Accelerating and Decelerating Constant Frequencies in the Analog References (+/- Speed)

The +/- speed function increments or decrements the frequency set in analog frequency reference d4-02 (+/- Speed Limit) using two contact signal inputs.

To use this function, set One of the parameters H1-01 to H1-10 (multi-function contact terminal inputs S3 to S12 function selection) to 1C (Trim Control Increase command) and 1D (Trim Control Decrease command). Be sure to allocate two terminals so that the Trim Control Increase command and Trim Control Decrease command can be used as a pair.

■Related Parameters

Parameter Number	Name	Description	Setting Range	Factory Setting	Change during Operation	Control Methods				
	Display					V/f	V/f with PG	Open Loop Vector 1	Flux Vector	Open Loop Vector 2
d4-02	Trim Control Level Trim Control Lvl	Sets the amount of frequency reference to be added or subtracted as a percentage of maximum output frequency (E1-04) when multi-function inputs “trim control increase” and “trim control decrease” are selected (H1-XX = 1C and 1D).	0 to 100	10%	No	A	A	A	A	A

■Trim Control Increase/Decrease Command and Frequency Reference

The frequency references using Trim Control Increase/Decrease command ON/OFF operations are shown below.

Frequency Reference	Set Frequency Reference + d4-02	Set Frequency Reference - d4-02	Set Frequency Command	
Trim Control Increase Command Terminal	ON	OFF	ON	OFF
Trim Control Decrease Command Terminal	OFF	ON	ON	OFF

■Application Precautions

- Trim Control Increase/Decrease command is enabled when speed reference > 0 and the speed reference is from an analog input.
- When the analog frequency reference value - d4-02 < 0, the frequency reference is set to 0.
- If only the Trim Control Increase command or Trim Control Decrease command has been set for a multi-function contact input terminal S3 to S12, operation error OPE03 (invalid multi-function input selected) will occur.

◆ Hold Analog Frequency Using User-set Timing

When one of H1-01 to H1-10 (multi-function contact input terminal S3 to S12 function selection) is set to 1E (sample/hold analog frequency command), the analog frequency reference will be held from 100ms after the terminal is turned ON, and operation will continue thereafter at that frequency.

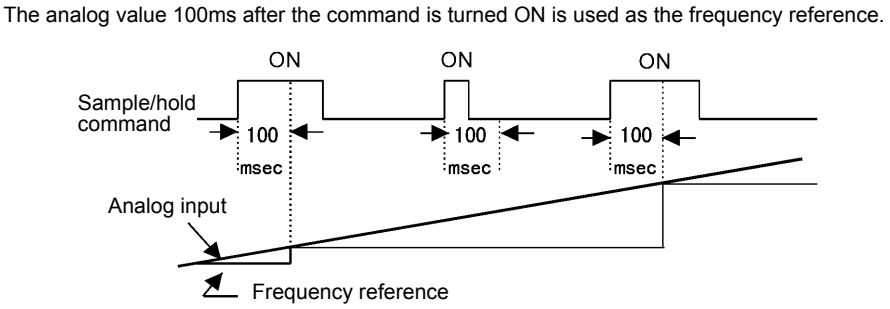

Fig 6.52 Sample/Hold Analog Frequency

■Precautions

When setting and executing sample and hold for analog frequency references, observe the following precautions.

Setting Precautions

When using sample/hold of analog frequency reference, you cannot use the following commands at the same time. If these commands are used at the same time, operation error OPE03 (invalid multi-function input selection) will occur.

- Acceleration/Deceleration Ramp Hold command
- UP/DOWN command
- Trim Control Increase/Decrease command

Application Precautions

- When performing sample/hold of analog frequency references, be sure to store references of 100ms minimum. If the reference time is less than 100ms, the frequency reference will not be held.
- The analog frequency reference that is held will be deleted when the power supply is turned OFF.

◆ Switching Operations between a Communications Option Card and Control Circuit Terminals

You can switch reference input between the Communications Option Card and the control circuit terminals. Set one of the parameters H1-01 to H1-10 (multi-function contact input terminal S3 to S12 function selection) to 2 (Option/Drive selection) to enable switching reference input using the terminal ON/OFF status when the Drive is stopped.

■Setting Precautions

To switch command inputs between the Communications Option Card and the control circuit terminals, set the following parameters.

- Set b1-01 (Reference Selection) to 1 (Control circuit terminal [analog input])
- Set b1-02 (Operation Method Selection to 1 (Control circuit terminal (sequence inputs])
- Set one of the parameters H1-01 to H1-10 (multi-function contact input terminal S3 to S12 function selection) to 2 (Option/Drive selection).

Terminal Status	Frequency Reference and Run Command Selection
OFF	Drive (Can be operated from frequency reference or control circuit terminal from analog input terminal.)
ON	Communications Option Card (Frequency reference and run command are enabled from communications Option Card.)

◆ Jog Frequency Operation without Forward and Reverse Commands (FJOG/RJOG)

The FJOG/RJOG command functions operate the Drive using jog frequencies by using the terminal ON/OFF operation. When using the FJOG/RJOG commands, there is no need to input the run command.
To use this function, set one of the parameters H1-01 to H1-10 (multi-function contact input terminal S3 to S12 function selection) to 12 (FJOG command) or 13 (RJOG command).

■Related Parameters

Parameter Number	Name	Description	Setting Range	Factory Setting	Change during Operation	Control Methods				
	Display					V/f	V/f with PG	Open Loop Vector 1	Flux Vector	Open Loop Vector 2
d1-17	Jog Frequency Reference Jog Reference	Frequency reference when: "Jog frequency reference" is selected via multi-function input terminals. "Jog frequency reference" has priority over "multi-step speed reference 1 to 4". Parameter d1-17 is also the reference for the JOG key on the Digital Operator, and the multi-function inputs "forward jog" and "reverse jog". Setting units are affected by o1-03.	0.00 to 400.00 *1	6.00Hz	Yes	Q	Q	Q	Q	Q

*1 Setting range changes to 0 thru 66.0 when operating in Vector 2 wo/PG.. The upper limit for the setting range also depends on the upper limit in E1-04. The max setting is 400.00.

Multi-Function Contact Inputs (H1-01 to H1-10)

Setting Value	Function	Control Methods				
		V/f	V/f with PG	Open Loop Vector 1	Flux Vector	Open Loop Vector 2
12	FJOG command (ON: Forward run at jog frequency d1-17)	Yes	Yes	Yes	Yes	Yes
13	RJOG command (ON: Reverse run at jog frequency d1-17)	Yes	Yes	Yes	Yes	Yes

■Application Precautions

- Jog frequencies using FJOG and RJOG commands are given priority over other frequency references.
- When both FJOG command and RJOG commands are ON for 500ms or longer at the same time, the Drive stops according to the setting in b1-03 (stopping method selection).

◆ Stopping the Drive by Notifying Programming Device Errors to the Drive (External Fault Function)

The external fault function performs the error contact output, and stops the Drive operation if the Drive peripheral devices break down or an error occurs. The digital operator will display EFx (External fault [input terminal Sx]). The x in EFx shows the terminal number of the terminal that input the external fault signal. For example, if an external fault signal is input to terminal S3, EF3 will be displayed.

To use the external fault function, set one of the values 20 to 2F in one of the parameters H1-01 to H1-10 (multi-function contact input terminal S3 to S12 function selection).

Select the value to be set in H1-01 to H1-10 from a combination of any of the following three conditions.

- Signal input level from peripheral devices
- External fault detection method
- Operation during external fault detection

The following table shows the relationship between the combinations of conditions and the set value in H1-□□.

Set Value	Input Level (See Note 1.)		Error Detection Method (See Note 2.)		Operation During Error Detection			
	NO Contact	NC Contact	Constant Detection	Detection During Operation	Decelerate to Stop (Error)	Coast to Stop (Error)	Emergency Stop (Error)	Continue Operation (Warning)
20	Yes		Yes		Yes			
21		Yes	Yes		Yes			
22	Yes			Yes	Yes			
23		Yes		Yes	Yes			
24	Yes		Yes			Yes		
25		Yes	Yes			Yes		
26	Yes			Yes		Yes		
27		Yes		Yes		Yes		
28	Yes		Yes				Yes	
29		Yes	Yes				Yes	
2A	Yes			Yes			Yes	
2B		Yes		Yes			Yes	
2C	Yes		Yes					Yes
2D		Yes	Yes					Yes
2E	Yes			Yes				Yes
2F		Yes		Yes				Yes

Note 1. Set the input level to detect errors using either signal ON or signal OFF. (NO contact: External fault when ON; NC contact: External fault when OFF).

2. Set the detection method to detect errors using either constant detection or detection during operation.
Constant detection: Detects while power is supplied to the Drive.
Detection during operation: Detects only during Drive operation.

Monitor Parameters

This section explains the analog monitor and pulse monitor parameters.

◆ Using the Analog Monitor Parameters

This section explains the analog monitor parameters.

■Related Parameters

Parameter Number	Name: Display	Description	Setting Range	Factory Setting	Change during Operation	Control Methods: V/f	V/f with PG	Open Loop Vector 1	Flux Vector	Open Loop Vector 2
H4-01	Terminal FM Monitor Selection Terminal FM Sel	Selects the monitor output (U1-xx) function for terminals FM and FC. Refer to "U1-xx" monitors for available settings. Unavailable settings: 4, 10, 11, 12, 13, 14, 25, 28, 29, 30, 31, 34, 35, 39, 40, 41, 42, 47, 49, 50	1 to 48	2	No	A	A	A	A	A
H4-02	Terminal FM Gain Setting Terminal FM Gain	Sets terminal FM output level when selected monitor is at 100%.*1	0.0 to 1000.0	100%	Yes	Q	Q	Q	Q	Q
H4-03	Terminal FM Bias Setting Terminal FM Bias	Sets terminal FM output level when selected monitor is at 0%.*1	-110.0 to 110.0	0.0%	Yes	A	A	A	A	A
H4-04	Terminal AM Monitor Selection Terminal AM Sel	Selects which monitor will be the output on terminals AM and FC. Same function choices as H4-01.	1 to 48	3	No	A	A	A	A	A
H4-05	Terminal AM Gain Setting Terminal AM Gain	Sets terminal AM output voltage (in percent of 10Vdc) when selected monitor is at 100% output.*1	0.0 to 1000.0	50.0%	Yes	Q	Q	Q	Q	Q
H4-06	Terminal AM Bias Setting Terminal AM Bias	Sets terminal AM output voltage (in percent of 10Vdc) when selected monitor is at 0% output.*1	-110.0 to 110.0	0.0%	Yes	A	A	A	A	A
H4-07	Terminal FM Signal Level Selection AO Level Select1	Selects the signal level of terminal FM. 0: 0 to 10Vdc 1: -10 to +10Vdc 2: 4 to 20mA*2 *Set the analog output jumper CN15 in the proper position.	0 to 2	0	No	A	A	A	A	A

Parameter Number	Name	Description	Setting Range	Factory Setting	Change during Operation	Control Methods				
	Display					V/f	V/f with PG	Open Loop Vector 1	Flux Vector	Open Loop Vector 2
F4-01	AO-08/AO-12 Channel 1 Monitor Selection AO Ch1 Select	Sets the number of the monitor item to be output. (U1-oo) The following settings cannot be used: 4, 10 to 14, 25, 28, 29, 30, 34, 35, 39, 40, 41.	1 to 45	2	No	A	A	A	A	A
F4-02	AO-08/AO-12 Channel 1 Gain AO Ch1 Gain	Sets the channel 1 gain. Ex: Set F4-02 = 50% to output 100% at 5.0V output.	0.00 to 1000.0	100.0%	Yes	A	A	A	A	A
F4-03	AO-08/AO-12 Channel 2 Monitor Selection AO Ch2 Select	Sets the number of the monitor item to be output. (U1-xx) The following settings cannot be set: 4, 10 to 14, 25, 28, 29, 30, 34, 39, 40, 41.	1 to 45	3	No	A	A	A	A	A
F4-04	AO-08/AO-12 Channel 2 Gain AO Ch2 Gain	Sets the channel 2 gain. *3 Ex: Set F4-04 = 50% to output 100% at 5.0V output.	0.00 to 1000.0	50.0%	Yes	A	A	A	A	A
F4-05	AO Ch1 Bias AO Ch1 Bias	Sets the channel 1 bias (100%/10V). Ex: Set F4-05 = 50% to output 0% at 5.0V output.	-110.0 to 110.0	0.0%	Yes	A	A	A	A	A
F4-06	AO Ch2 Bias AO Ch2 Bias	Sets the channel 2 bias (100%/10V). Ex: Set F4-06 = 50% to output 0% at 5.0V output.	-110.0 to 110.0	0.0%	Yes	A	A	A	A	A
F4-07	AO-12 Channel 1 Signal Level AO Opt Level Sel	Sets the range of the voltage output. 0: 0 to 10Vdc 1: -10 to +10Vdc	0 to 1	0	No	A	A	A	A	A
F4-08	AO-12 Channel 2 Signal Level AO Opt Level Sel	Sets the range of the voltage output. 0: 0 to 10Vdc 1: -10 to +10Vdc	0 to 1	0	No	A	A	A	A	A

*1 In order to adjust the meter, 100% of the appropriate output is multiplied for the gain setting, the bias amount is added and then output.
See H4-02 when stopped in Quick, Advanced, or Verify mode. If 03 appears on the setting screen, then terminal FM is used.
See H4-04 when stopped in Quick, Advanced, or Verify mode. If 06 appears on the setting screen, then terminal AM is used.

*2 Setting "2: 4 to 20mA" is not available in F7A

*3 In order to adjust the meter, 100% of the appropriate output is multiplied for the gain setting, and the bias amount is added and then output.
See F4-02 when stopped in Quick, Advanced, or Verify mode. If 05 appears on the setting screen, then CH1 is used.
See F4-04 when stopped in Quick, Advanced, or Verify mode. If 06 appears on the setting screen, then CH2 is used.

■Selecting Analog Monitor Items

The digital operator monitor items (U1-□□ [status monitor]) are output from multi-function analog output terminals FM-AC and AM-AC. Refer to *Chapter 5 User Parameters*, and set the values for the □□ part of U1-□□ (status monitor).

Alternatively, you can output monitor items (U1-□□ [status monitor]) from analog output option terminal channels 1 and 2 on analog monitor cards AO-08 and AO-12. Refer to the table of parameters, and set the values.

■Adjusting the Analog Monitor Items

Adjust the output voltage for multi-function analog output terminals FM-AC and AM-AC using the gain and bias in H4-02, H4-03, H4-05, and H4-06. Also, adjust the output voltage for output channels 1 and 2 of Analog Output Option Cards AO-08 and AO-12 using the gain and bias in F4-02, F4-04, and F4-06.

Adjusting the Meter

Display the data setting display for the gain and bias parameters corresponding to the output channel of the Drive Unit and the AO Option Card while the Drive is stopped to output the following voltages to the analog monitor terminal, to enable meter adjusting while the Drive is stopped.

10 V/100% monitor output × output gain + output bias

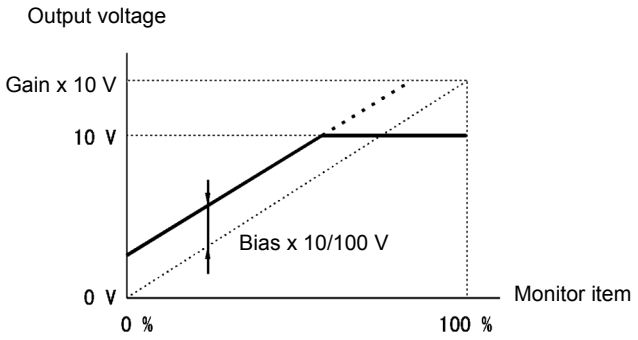

Fig 6.53 Monitor Output Adjustment

■Switching Analog Monitor Signal Levels

Monitor items corresponding to 0 to ±10Voutput 0 to 10Vsignals when the monitor value is positive (+), and 0 to -10Vsignals when the monitor value is negative (-). For monitor items corresponding to 0 to ±10 V, refer to *Chapter 5 User Parameters*.

INFO

You can select the signal levels separately for multi-function analog output terminals and analog output option terminals.

◆ Using Pulse Train Monitor Contents

This section explains pulse monitor parameters.

■Related Parameters

Parameter Number	Name: Display	Description	Setting Range	Factory Setting	Change during Operation	Control Methods: V/f	V/f with PG	Open Loop Vector 1	Flux Vector	Open Loop Vector 2
H6-06	Terminal MP Pulse Train Monitor Selection Pulse Output Sel	Select the pulse train monitor output terminal MP function (value of the xx part of U1-xx). See Table A2 for the list of U1 monitors.	1, 2, 5, 20, 24, 31, 36 only	2	Yes	A	A	A	A	A
H6-07	Pulse Train Monitor Scaling PO Scaling	Sets the number of output pulses when the monitor is 100% (inHz). Set H6-06 to 2, and H6-07 to 0, to make the pulse train monitor output synchronous to the output frequency.	0 to 32000	1440Hz	Yes	A	A	A	A	A

■Selecting Pulse Monitor Items

Output digital operator monitor items (U1-□□ [status monitor]) from pulse monitor terminal MP-AC. Refer to *Chapter 5 User Parameters*, and set the □□ part of U1-□□ (Status monitor). The possible monitor selections are limited as follows: U1-01, 02, 05, 20, 24, 36.

■Adjusting the Pulse Monitor Items

Adjust the pulse frequency output from pulse monitor terminal MP-AC. Set the pulse frequency output when 100% frequency is output to H6-07.

Set H6-06 to 2, and H6-07 to 0, to output the frequency synchronous with the Drive's U-phase output.

■Application Precautions

When using a pulse monitor parameter, connect a peripheral device according to the following load conditions. If the load conditions are different, there is a risk of characteristic insufficiency or damage to the machinery.

Using a Sourcing Output

Output Voltage (Isolated) VRL (V)	Load Impedance (kΩ)
+5V min.	1.5 kΩ min.
+8V min.	3.5 kΩ min.
+10V min.	10 kΩ min.

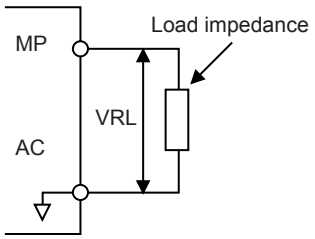

Using a Sinking Input

External Power Supply (V)	12 VDC±10%, 15 VDC±10%
Sink Current (mA)	16mA Max

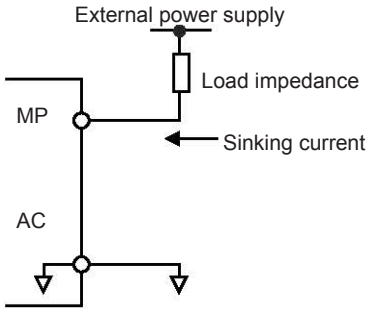

Individual Functions

This section explains the individual functions used in special applications.

◆ Using MODBUS Communications

You can perform serial communications with MEMOCON-series Programmable Controllers (PLCs) or similar devices using the MODBUS protocol.

■MODBUS Communications Configuration

MODBUS communications are configured using 1 master (PLC) and a maximum of 31 slaves. Serial communications between master and slave are normally started by the master, and the slave responds.

The master performs signal communications with one slave at a time. Consequently, you must set the address of each slave beforehand, so the master can perform signal communications using that address. Slaves receiving commands from the master perform the specified function, and send a response to the master.

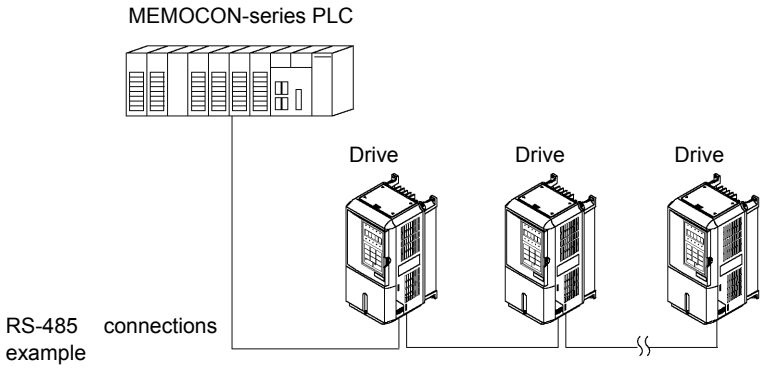

Fig 6.54 Example of Connections between PLC and Drive

■Communications Specifications

The MODBUS communications specifications are shown in the following table.

Item	Specifications
Interface	RS-422, RS-485
Communications Cycle	Asynchronous (Start-stop synchronization)
Communications Parameters	Baud rate: Select from 1,200, 2,400, 4,800, 9,600, and 19,200 bps. Data length: 8 bits fixed Parity: Select from even, odd, or none. Stop bits: 1 bit fixed
Communications Protocol	MODBUS (RTU mode only)
Number of Connectable Units	31 units max. (when using RS-485)

■Communications Connection Terminal

MODBUS communications use the following terminals: S+, S-, R+, and R-. Set the terminating resistance by turning ON pin 1 of switch S1 for the last Drive only, as seen from the PLC.

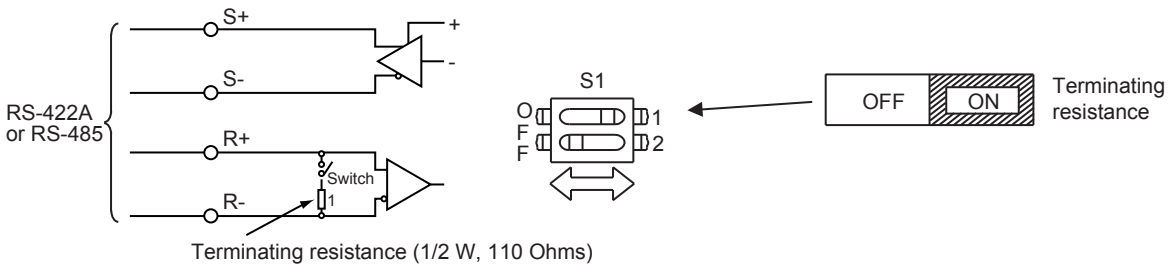

Fig 6.55 Communications Connection Terminal

IMPORTANT

1. Separate the communications cables from the main circuit cables and other wiring and power cables.
2. Use shielded cables for the communications cables, connect the shield cover to the Drive earth terminal, and arrange the terminals so that the other end is not connected to prevent operating errors due to noise.
3. When using RS-485 communications, connect S+ to R+, and S- to R-, on the Drive exterior.

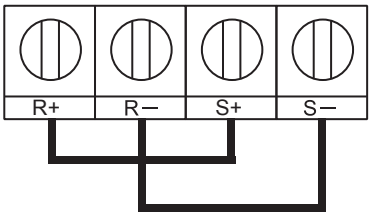

■Procedure for Communicating with the PLC

Use the following procedure to perform communications with the PLC.

1. Turn OFF the power supply turned and connect the communications cable between the PLC and the Drive.
2. Turn ON the power supply.
3. Set the required communications parameters (H5-01 to H5-07) using the Digital Operator.
4. Turn OFF the power supply, and check that the Digital Operator display has completely disappeared.
5. Turn ON the power supply once again.
6. Perform communications with the PLC.

INFO

Set the timer on the master to monitor response time from the slave. Set the master so that if the slave does not respond to the master within the set time, the same command message will be sent from the master again.

■Related Parameters

Parameter Number	Name: Display	Description	Setting Range	Factory Setting	Change during Operation	Control Methods: V/f	V/f with PG	Open Loop Vector 1	Flux Vector	Open Loop Vector 2
b1-01	Frequency Reference Selection Reference Source	Selects the frequency reference input source. 0: Operator - Digital preset speed U1-01 or d1-01 to d1-17. 1: Terminals - Analog input terminal A1 (or terminal A2 based on parameter H3-09). 2: Serial Com - Modbus RS-422/485 terminals R+, R-, S+, and S-. 3: Option PCB - Option board connected on 2CN. 4: Pulse Input (Terminal RP)	0 to 4	1	No	Q	Q	Q	Q	Q
b1-02	Run Command Selection Run Source	Selects the run command input source. 0: Operator - RUN and STOP keys on Digital Operator. 1: Terminals - Contact closure on terminals S1 or S2. 2: Serial Com - Modbus RS-422/485 terminals R+, R-, S+, and S-. 3: Option PCB - Option board connected on 2CN.	0 to 3	1	No	Q	Q	Q	Q	Q
H5-01	Drive Node Address Serial Comm Adr	Selects Drive station node number (address) for Modbus terminals R+, R-, S+, S-. The Drive's power must be cycled for the setting to take effect.	0 to 20 *	1F	No	A	A	A	A	A
H5-02	Communication Speed Selection Serial Baud Rate	Selects the baud rate for Modbus terminals R+, R-, S+ and S-. The Drive's power must be cycled for the setting to take effect. 0: 1200 bps 1: 2400 bps 2: 4800 bps 3: 9600 bps 4: 19200 bps	0 to 4	3	No	A	A	A	A	A
H5-03	Communication Parity Selection Serial Com Sel	Selects the communication parity for Modbus terminals R+, R-, S+ and S-. The Drive's power must be cycled for the setting to take effect. 0: No Parity 1: Even Parity 2: Odd Parity	0 to 2	0	No	A	A	A	A	A
H5-04	Stopping Method After Communication Error Serial Fault Sel	Selects the stopping method when a communication timeout fault (CE) is detected. 0: Ramp to Stop 1: Coast to Stop 2: Fast-Stop 3: Alarm Only	0 to 3	3	No	A	A	A	A	A

Parameter Number	Name: Display	Description	Setting Range	Factory Setting	Change during Operation	Control Methods: V/f	V/f with PG	Open Loop Vector 1	Flux Vector	Open Loop Vector 2
H5-05	Communication Fault Detection Selection Serial Flt Dtct	Enables or disables the communications timeout fault (CE). 0: Disabled - A communication loss will not cause a communication fault. 1: Enabled - If communication is lost for more than 2 seconds, a CE fault will occur.	0 or 1	1	No	A	A	A	A	A
H5-06	Drive Transmit Wait Time Transmit WaitTIM	Set the delay time from when the Drive receives data to when the Drive sends data.	5 to 65	5ms	No	A	A	A	A	A
H5-07	RTS Control Selection RTS Control Sel	Enables or disables "request to send" (RTS) control: 0: Disabled - RTS is always on 1: Enabled - RTS turns on only when sending	0 or 1	1	No	A	A	A	A	A

* If H5-01 is set to zero, then the drive will be unable to respond to Modbus communication.

MODBUS communications can perform the following operations regardless of the settings in b1-01 and b1-02.

- Monitoring operation status from the PLC
- Setting and reading parameters
- Resetting errors
- Inputting multi-function commands

An OR operation is performed between the multi-function commands input from the PLC and commands input from multi-function contact input terminals S3 to S7.

■Message Format

In MODBUS communications, the master sends commands to the slave, and the slave responds. The message format is configured for both sending and receiving as shown below, and the length of data packets is changed by the command (function) contents.

Slave address
Function code
Data
Error check

The space between messages must support the following.

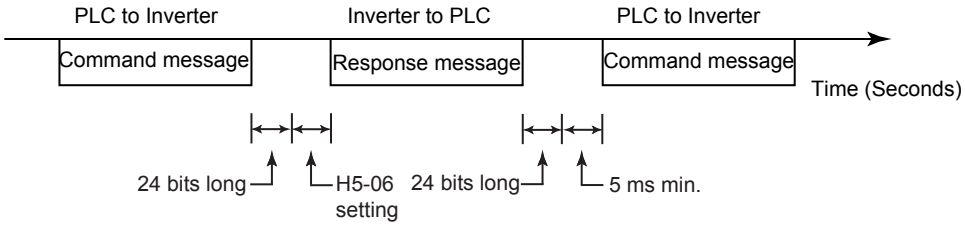

Fig 6.56 Message Spacing

Slave Address

Set the Drive address from 0 to 32. If you set 0, commands from the master will be broadcast (i.e., the Drive will not return responses).

Function Code

The function code specifies commands. There are three function codes, as shown below.

Function Code (Hexadecimal)	Function	Command Message		Response Message	
		Min. (Bytes)	Max. (Bytes)	Min. (Bytes)	Max. (Bytes)
03H	Read storage register contents	8	8	7	37
08H	Loopback test	8	8	8	8
10H	Write multiple storage registers	11	41	8	8

Data

Configure consecutive data by combining the storage register address (test code for a loopback address) and the data the register contains. The data length changes depending on the command details.

Error Check

Errors are detected during communications using CRC-16. Perform calculations using the following method.

1. The factory setting for CRC-16 communications is usually 0, but when using the MODBUS system, set the factory setting to 1 (i.e., set all 16 bits to 1).
2. Calculate CRC-16 using MSB as slave address LSB, and LSB as the MSB of the final data.
3. Also calculate CRC-16 for response messages from the slaves, and compare them to the CRC-16 in the response messages.

■MODBUS Message Example

An example of MODBUS command/response messages is given below.

Reading Storage Register Contents

Read the contents of the storage register only for specified quantities whose addresses are consecutive, starting from a specified address. The contents of the storage register are separated into higher place 8 bits and lower place 8 bits, and comprise the data within response messages in address order.

The following table shows message examples when reading status signals, error details, data link status, and frequency references from the slave 2 Drive.

Command Message

Slave Address		02H
Function Code		03H
Start Address	Higher place	00H
	Lower place	20H
Quantity	Higher place	00H
	Lower place	04H
CRC-16	Higher place	45H
	Lower place	F0H

Response Message (During Normal Operation)

Slave Address		02H
Function Code		03H
Data quantity		08H
Lead storage register	Higher place	00H
	Lower place	65H
Next storage register	Higher place	00H
	Lower place	00H
Next storage register	Higher place	00H
	Lower place	00H
Next storage register	Higher place	01H
	Lower place	F4H
CRC-16	Higher place	AFH
	Lower place	82H

Response Message (During Error)

Slave Address		02H
Function Code		83H
Error code		03H
CRC-16	Higher place	F1H
	Lower place	31H

Loopback Test

The loopback test returns command messages directly as response messages without changing the contents to check the communications between the master and slave. You can set user-defined test code and data values.

The following table shows a message example when performing a loopback test with the slave 1 Drive.

Command Message

Slave address		01H
Function code		08H
Test Code	Higher place	00H
	Lower place	00H
Data	Higher place	A5H
	Lower place	37H
CRC-16	Higher place	DAH
	Lower place	8DH

Response Message (During Normal Operation)

Slave address		01H
Function code		08H
Test Code	Higher place	00H
	Lower place	00H
Data	Higher place	A5H
	Lower place	37H
CRC-16	Higher place	DAH
	Lower place	8DH

Response Message (During Error)

Slave address		01H
Function code		89H
Error Code		01H
CRC-16	Higher place	86H
	Lower place	50H

Writing to Multiple Storage Registers

Write the specified data to each specified storage register from the specified addresses. The written data must be in the following order in the command message: Higher place 8 bits, then lower place 8 bits, in storage register address order.

The following table shows an example of a message when forward operation has been set at a frequency reference of 60.0Hz in the slave 1 Drive by the PLC.

Command Message

Slave Address		01H
Function Code		10H
Start Address	Higher place	00H
	Lower place	01H
Quantity	Higher place	00H
	Lower place	02H
No. of data		04H
Lead data	Higher place	00H
	Lower place	01H
Next data	Higher place	02H
	Lower place	58H
CRC-16	Higher place	63H
	Lower place	39H

Response Message (During Normal Operation)

Slave Address		01H
Function Code		10H
Start Address	Higher place	00H
	Lower place	01H
Quantity	Higher place	00H
	Lower place	02H
CRC-16	Higher place	10H
	Lower place	08H

Response Message (During Error)

Slave Address		01H
Function Code		90H
Error code		02H
CRC-16	Higher place	CDH
	Lower place	C1H

INFO

Set the number of data specified using command messages as quantity of specified messages x 2. Handle response messages in the same way.

■Data Tables

The data tables are shown below. The types of data are as follows: Reference data, monitor data, and broadcast data.

Reference Data

The reference data table is shown below. You can both read and write reference data.

Register No.	Contents	
0000H	Not used	
0001H	Frequency reference	
	Bit 0	Run/stop command 1: Run 0: Stop
	Bit 1	Forward/reverse operation 1: Reverse 0: Forward
	Bit 2	External fault 1: Error (EFO)
	Bit 3	Fault reset 1: Reset command
	Bit 4	ComNet
	Bit 5	ComCtrl
	Bit 6	Multi-function input command 3
	Bit 7	Multi-function input command 4
	Bit 8	Multi-function input command 5
	Bit 9	Multi-function input command 6
	Bit A	Multi-function input command 7
	Bit B	Multi-function input command 8
	Bit C	Multi-function input command 9
	Bit D	Multi-function input command 10
	Bit E	Multi-function input command 11
	Bit F	Multi-function input command 12
0002H	Frequency reference (Set units using parameter o1-03)	
0003H	Not used	
0004H	Torque reference	
0005H	Torque compensation	
0006H	PID target value	
0007H	Analog output 1 setting (-11 V/-1540 to 10 V/1540)	
0008H	Analog output 2 setting (-11 V/-1540 to 11 V/1540)	
0009H	Multi-function contact output setting	
	Bit 0	Contact output (terminal M1-M2) 1: ON 0: OFF
	Bit 1	Contact output (terminal M3-M4) 1: ON 0: OFF
	Bit 2	Contact output (terminal M5-M6) 1: ON 0: OFF
	Bit 3	PHC3(Contact P3-C3) 1: ON 0: OFF
	Bit 4	PHC4(Contact P4-C4) 1: ON 0: OFF
	Bit 5	Not used
	Bit 6	Set error contact (terminal MA-MC) output using bit 7. 1: ON 0: OFF
	Bit 7	Error contact (terminal MA-MC) 1: ON 0: OFF
	Bits 8 to F	Not used
000AH to 000EH	Not used	

Register No.	Contents	
000FH	Reference selection settings	
	Bit 0	Not used
	Bit 1	Use MODBUS 0006H PID target value
	Bits 2 to B	Not used
	C	Broadcast data terminal S5 input 1: Enabled 0: Disabled
	D	Broadcast data terminal S6 input 1: Enabled 0: Disabled
	E	Broadcast data terminal S7 input 1: Enabled 0: Disabled
	F	Broadcast data terminal S8 input 1: Enabled 0: Disabled

Note Write 0 to all unused bits. Also, do not write data to reserved registers.

Monitor Data

The following table shows the monitor data. Monitor data can only be read.

Register No.	Contents	
0020H	Drive status	
	Bit 0	Operation 1: Operating 0: Stopped
	Bit 1	Reverse operation 1: Reverse operation 0: Forward operation
	Bit 2	Drive startup complete 1: Completed 2: Not completed
	Bit 3	Error 1: Error
	Bit 4	Data setting error 1: Error
	Bit 5	Multi-function contact output 1 (terminal M1 - M2) 1: ON 0: OFF
	Bit 6	Multi-function contact output 2 (terminal M3 - M4) 1: ON 0: OFF
	Bit 7	Multi-function contact output 3 (terminal M5 - M6) 1: ON 0: OFF
	Bit 8	Multi-function PHC output 3 (terminal P3 - C3) 1: ON 0: OFF
	Bit 9	Multi-function PHC output 4 (terminal P4 - C4) 1: ON 0: OFF
	Bits A and B	Not used
0021H	Error details	
	Bit 0	Overcurrent (OC) Ground fault (GF)
	Bit 1	Main circuit overvoltage (OV)
	Bit 2	Drive overload (OL2)
	Bit 3	Drive overheat (OH1, OH2)
	Bit 4	Injection brake transistor resistance overheat (rr, rH)
	Bit 5	Fuse blown (PUF)
	Bit 6	PID feedback reference lost (FbL)
	Bit 7	External fault (EF, EFO)
	Bit 8	Hardware error (CPF)
	Bit 9	Motor overload (OL1), overtorque 1 (OL3) detected, or overtorque 2 (OL4) detected
	Bit A	PG broken wire detected (PGO), Overspeed (OS), Speed deviation (DEV)
	Bit B	Main circuit undervoltage (UV) detected
	Bit C	Main circuit undervoltage (UV1), control power supply error (UV2), inrush prevention circuit error (UV3), power loss
	Bit D	SPO output phase open, SPI output phase open
	Bit E	MODBUS communications error (CE)
	Bit F	Operator disconnected (OPR)
0022H	Data link status	
	Bit 0	Writing data
	Bit 1	Not used
	Bit 2	Not used
	Bit 3	Upper and lower limit errors
	Bit 4	Data integrity error
	Bits 5 to F	Not used
0023H	Frequency reference (U1-01)	
0024H	Output frequency (U1-02)	
0025H	Output voltage reference (U1-06)	
0026H	Output current (U1-03)	
0027H	Output power (U1-08)	
0028H	Torque reference (U1-09)	

Register No.	Contents		
0029H	Not used		
002AH	Not used		
002BH	Sequence input status		
	Bit 0	1: Control circuit terminal S1 ON	
	Bit 1	1: Control circuit terminal S2 ON	
	Bit 2	1: Control circuit terminal S3 ON	
	Bit 3	1: Control circuit terminal S4 ON	
	Bit 4	1: Control circuit terminal S5 ON	
	Bit 5	1: Control circuit terminal S6 ON	
	Bit 6	1: Control circuit terminal S7 ON	
	Bit 7	1: Control circuit terminal S8 ON	
	Bit 8	1: Control circuit terminal S9 ON	
	Bit 9	1: Control circuit terminal S10 ON	
	Bit A	1: Control circuit terminal S11 ON	
	Bit B	1: Control circuit terminal S12 ON	
	Bits C to F	Not used	
002CH	Drive status		
	Bit 0	Operation	1: Operating
	Bit 1	Zero speed	1: Zero speed
	Bit 2	Frequency matching	1: Matched
	Bit 3	User-defined speed matching	1: Matched
	Bit 4	Frequency detection 1	
	Bit 5	Frequency detection 2	
	Bit 6	Drive startup completed	1: Startup completed
	Bit 7	Low voltage detection	1: Detected
	Bit 8	Baseblock	1: Drive output baseblock
	Bit 9	Frequency reference mode	1: Not communications 0: Communications
	Bit A	Run command mode	1: Not communications 0: Communications
	Bit B	Overtorque detection	1: Detected
	Bit C	Frequency reference lost	1: Lost
	Bit D	Retrying error	1: Retrying
	Bit E	Error (including MODBUS communications time-out) 1:Error occurred	
	Bit F	MODBUS communications time-out 1: Timed out	
002DH	Multi-function contact output status		
	Bit 0	Multi-function contact output 1 (terminal M1 - M2) 1: ON 0: OFF	
	Bit 1	Multi-function contact output 2 (terminal M3 - M4) 1: ON 0: OFF	
	Bit 2	Multi-function contact output 3 (terminal M5 - M6) 1: ON 0: OFF	
	Bit 3	Multi-function PHC output 3 (terminal P3 - C3) 1: ON 0: OFF	
	Bit 4	Multi-function PHC output 4 (terminal P4 - C4) 1: ON 0: OFF	
	Bits 5 to F	Not used	
002EH - 0030H	Not used		
0031H	Main circuit DC voltage		
0032H	Torque monitor		
0033H	Output power (U1-08)		
0034H - 0037H	Not used		
0038H	PID feedback quantity (Input equivalent to 100%/Max. output frequency; 10/1%; without sign)		
0039H	PID input quantity (±100%/±Max. output frequency; 10/1%; with sign)		
003AH	PID output quantity (±100%/±Max. output frequency; 10/1%; with sign)		
003BH	CPU software number		
003CH	Flash software number		

Register No.	Contents	
003DH	Communications error details	
	Bit 0	CRC error
	Bit 1	Invalid data length
	Bit 2	Not used
	Bit 3	Parity error
	Bit 4	Overrun error
	Bit 5	Framing error
	Bit 6	Time-out
	Bits 7 to F	Not used
003EH	kVA setting	
003FH	Control method	

Note Communications error details are stored until an fault reset is input (you can also reset while the Unit is operating).

Broadcast Data

The following table shows the broadcast data. You can also write this data.

Register Address	Contents	
0001H	Operation signal	
	Bit 0	Run command 1: Operating 0: Stopped
	Bit 1	Reverse operation command 1: Reverse 0: Forward
	Bits 2 and 3	Not used
	Bit 4	External fault 1: Error (set using H1-01)
	Bit 5	Fault reset 1: Reset command (set using H1-02)
	Bits 6 to B	Not used
	Bit C	Multi-function contact input terminal S5 input
	Bit D	Multi-function contact input terminal S6 input
	Bit E	Multi-function contact input terminal S7 input
	Bit F	Multi-function contact input terminal S8 input
0002H	Frequency reference	30000/100%

Note Bit signals not defined in the broadcast operation signals use local node data signals continuously.

■ENTER Command

When writing parameters to the Drive from the PLC using MODBUS communications, the parameters are temporarily stored in the parameter data area in the Drive. To enable these parameters in the parameter data area, use the ENTER command.

There are two types of ENTER commands: ENTER commands that enable parameter data in RAM, and ENTER commands that write data to EEPROM (non-volatile memory) in the Drive at the same time as enabling data in RAM.

The following table shows the ENTER command data. ENTER command data can only be written.

The ENTER command is enabled by writing 0 to register number 0900H or 0910H.

Register No.	Contents
0900H	Write parameter data to EEPROM
0910H	Parameter data is not written to EEPROM, but refreshed in RAM only.

INFO

The maximum number of times you can write to EEPROM using the Drive is 100 thousand. Do not frequently execute ENTER commands (0900H) written to EEPROM.
The ENTER command registers are write-only. Consequently, if reading these registers, the register address will become invalid (Error code: 02H).

■Error Codes

The following table shows MODBUS communications error codes.

Error Code	Contents
01H	Function code error A function code other than 03H, 08H, or 10H has been set by the PLC.
02H	Invalid register number error • The register address you are attempting to access is not recorded anywhere. • With broadcast sending, a start address other than 0000H, 0001H, or 0002H has been set.
03H	Invalid quantity error • The number of data packets being read or written is outside the range 1 to 16. • In write mode, the number of data packets in the message is not No. of packets x 2.
21H	Data setting error • A simple upper limit or lower limit error has occurred in the control data or when writing parameters. • When writing parameters, the parameter setting is invalid.
22H	Write mode error • Attempting to write parameters from the PLC during operation. • Attempting to write via ENTER commands from the PLC during operation. • Attempting to write parameters other than A1-00 to A1-05, E1-03, or 02-04 when warning alarm CPF03 (defective EEPROM) has occurred. • Attempting to write read-only data.
23H	Writing during main circuit undervoltage (UV) error • Writing parameters from the PLC during UV (main circuit undervoltage) alarm. • Writing via ENTER commands from the PLC during UV (main circuit undervoltage) alarm.
24H	Writing error during parameter processing Attempting to write parameters from the PLC while processing parameters in the Drive.

■Slave Not Responding

In the following cases, the slave will ignore the write function. If the slave address specified in the command message is 0, all slaves execute the write function, but do not return response messages to the master.

- When a communications error (overrun, framing, parity, or CRC-16) is detected in the command message.
- When the slave address in the command message and the slave address in the Drive do not agree.
- When the data that configures the message and the data time length exceeds 24 bits.
- When the command message data length is invalid.

Application Precautions

Set a timer in the master to monitor response time from the slaves. Make the setting so that if no response is sent to the master from the slave within the set time, the same command message is sent again from the master.

■Self-Diagnosis

The Drive has a built-in function for self-diagnosing the operations of serial communications interface circuits. This function is called the self-diagnosis function. The self-diagnosis function connects the communications parts of the send and receive terminals, receives the data sent by the Drive, and checks if communications are being performed normally.

Perform the self-diagnosis function using the following procedure.

1. Turn ON the power supply to the Drive, and set 67 (communications test mode) in parameter H1-05 (Terminal S7 Function Selection).
2. Turn OFF the power supply to the Drive.
3. Perform wiring according to the following diagram while the power supply is turned OFF.
4. Turn ON the terminating resistance. (Turn ON pin 1 on DIP switch 1.)
5. Turn ON the power supply to the Drive again.

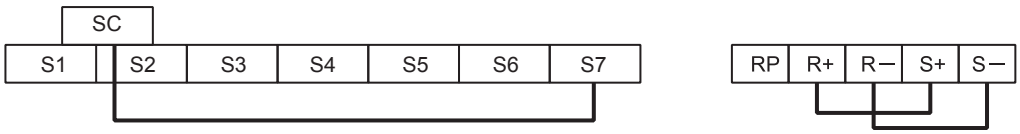

Fig 6.57 Details of Communications Terminals

“Pass” will be displayed if self-diagnosis is completed without an error occurring.

If an error occurs, a CE (MODBUS communications error) alarm will be displayed on the Digital Operator, the error contact output will be turned ON, and the Drive operation ready signal will be turned OFF.

◆ Using the Timer Function

Multi-function contact input terminals S3 to S7 can be designated as timer function input terminals, and multi-function output terminals M1-M2, M3-M4, and M5-M6 can be designated as timer function output terminals. By setting the delay time, you can erase chattering from the sensors and switches.

- Set one of the parameters H1-01 to H1-10 (multi-function contact input terminal S3 to S12) to 18 (timer function input).
- Set H2-01 to H2-03 (multi-function output terminals M1-M2, M3-M4, M5-M6, P3-C3, and P4-C4 function selection) to 12 (timer function output).

■Related Parameters

Parameter Number	Name: Display	Description	Setting Range	Factory Setting	Change during Operation	Control Methods: V/f	V/f with PG	Open Loop Vector 1	Flux Vector	Open Loop Vector 2
b4-01	Timer Function ON-Delay Time / Delay-ON Timer	Used in conjunction with a multi-function digital input and a multi-function digital output programmed for the timer function. This sets the amount of time between when the digital input is closed, and the digital output is energized.	0.0 to 300.0	0.0sec	No	A	A	A	A	A
b4-02	Timer Function OFF-Delay Time / Delay-OFF Timer	Used in conjunction with a multi-function digital input and a multi-function digital output programmed for the timer function. This sets the amount of time the output stays energized after the digital input is opened.	0.0 to 300.0	0.0sec	No	A	A	A	A	A

■Setting Example

When the timer function input ON time is longer than the value set in b4-01, the timer output function is turned ON. When the timer function input OFF time is longer than the value set in b4-02, the timer output function is turned OFF. An example of timer function operation is given in the following diagram.

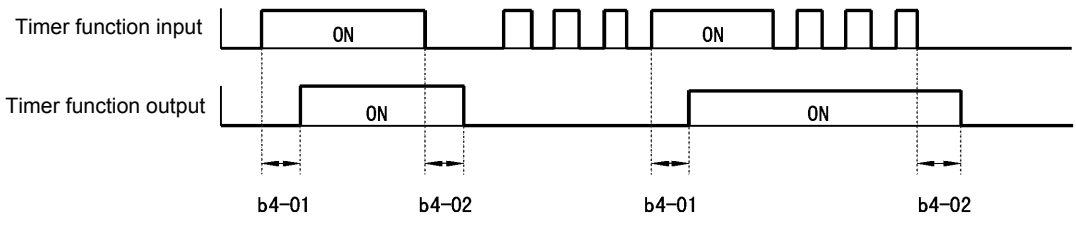

Fig 6.58 Timer Function Operation Example

◆ Using PID Control

PID control is a method of making the feedback value (detection value) match the set target value. By combining proportional control (P), integral control (I), and derivative control (D), you can even control targets (machinery) with play time.

The characteristics of the PID control operations are given below.

P control — Outputs the amount of operation proportional to the deviation. You cannot, however, set the deviation to zero using P control alone.

I control — Outputs the amount of operation that integrates the deviation. Used for matching feedback value to the target value. I control is not suited, however, to rapid variations.

D control — Outputs the amount of operation derived from the deviation. Can respond promptly to rapid variations.

■PID Control Operation

To understand the differences between each PID control operation (P, I, and D, the variation in the amount of operation (output frequency) is as shown in the following diagram when the deviation (i.e., the difference between the target value and feedback value) is fixed.

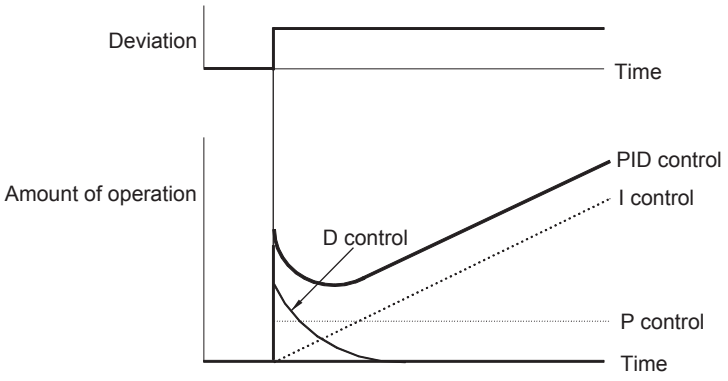

Fig 6.59 PID Control Operation

■PID Control Applications

The following table shows examples of PID control applications using the Drive.

Application	Control Details	Example of Sensor Used
Speed Control	• Feeds back machinery speed information, and matches speed to the target value. • Inputs speed information from other machinery as the target value, and performs synchronous control using the actual speed feedback.	Tachometer generator
Pressure Control	Feeds back pressure information, and performs constant pressure control.	Pressure sensor
Flow Rate Control	Feeds back flow rate information, and controls the flow rate highly accurately.	Flow rate sensor
Temperature Control	Feeds back temperature information, and performs temperature adjustment control by rotating the fan.	• Thermocouple • Thermistor

■Related Parameters

Parameter Number	Name: Display	Description	Setting Range	Factory Setting	Change during Operation	Control Methods: V/f	V/f with PG	Open Loop Vector 1	Flux Vector	Open Loop Vector 2
b5-01	PID Function Setting PID Mode	This parameter determines the function of the PID control. 0: Disabled 1: D= Feedback 2: D= Feed-Forward 3: Freq. Ref. + PID output (D = Feedback) 4: Freq. Ref. + PID output (D = Feed-Forward)	0 to 4	0	No	A	A	A	A	A
b5-02	Proportional Gain Setting PID Gain	Sets the proportional gain of the PID controller.	0.00 to 25.00	1.00	Yes	A	A	A	A	A
b5-03	Intregral Time Setting PID I Time	Sets the integral time for the PID controller. A setting of zero disables integral control.	0.0 to 360.0	1.0sec	Yes	A	A	A	A	A
b5-04	Intregral Limit Setting PID I Limit	Sets the maximum output possible from the integrator. Set as a percentage (%) of maximum frequency.	0.0 to 100.0	100.0%	Yes	A	A	A	A	A
b5-05	Derivative Time PID D Time	Sets D control derivative time. A setting of 0.00 disables derivative control.	0.00 to 10.00	0.00sec	Yes	A	A	A	A	A
b5-06	PID Output Limit PID Limit	Sets the maximum output possible from the entire PID controller. Set as a percentage (%) of maximum frequency.	0.0 to 100.0	100.0%	Yes	A	A	A	A	A
b5-07	PID Offset Adjustment PID Offset	Sets the amount of offset of the output of the PID controller. Set as a percentage (%) of maximum frequency. The offset is summed with the PID output. This can be used to artificially kick-start a slow starting PID loop.	-100.0 to +100.0	0.0%	Yes	A	A	A	A	A
b5-08	PID Primary Delay Time Constant PID Delay Time	Sets the amount of time for the filter on the output of the PID controller. Note: The offset is summed with the PID output. This can be used to artifically kick-start a slow starting PID loop. Note: Normally , change is not required.	0.00 to 10.00	0.00sec	Yes	A	A	A	A	A
b5-09	PID Output Level Selection Output Level Sel	Determines whether the PID controller will be direct or reverse acting. 0: Normal Output (direct acting) 1: Reverse Output (reverse acting)	0 to 1	0	No	A	A	A	A	A

Parameter Number	Name	Description	Setting Range	Factory Setting	Change during Operation	Control Methods				
	Display					V/f	V/f with PG	Open Loop Vector 1	Flux Vector	Open Loop Vector 2
b5-10	PID Output Gain Setting Output Gain	Sets the output gain of the PID controller.	0.0 to 25.0	1.0	No	A	A	A	A	A
b5-11	PID Output Reverse Selection Output Rev Sel	0: Zero Limit (when PID output goes negative, Drive stops). Zero Limit is automatic when reverse prohibit is selected using b1-04. 1: Reverse (when PID goes negative, Drive reverses).	0 to 1	0	No	A	A	A	A	A
b5-12	PID Feedback Reference Missing Detection Selection Fb los Det Sel	0: Disabled (no detection of loss of PID feedback) 1: Alarm (detection of loss of PID feedback, operation continues during detection with the fault contact not energized) 2: Fault (detection of loss of PID feeedback, coast to stop during detection and fault contact energizes)	0 to 2	0	No	A	A	A	A	A
b5-13	PID Feedback Loss Detection Level Fb los Det Lvl	Sets the PID feedback loss detection level as a percentage (%) of maximum frequency (E1-04).	0 to 100	0%	No	A	A	A	A	A
b5-14	PID Feedback Loss Detection Time Fb los Det Time	Sets the PID feedback loss detection delay time in terms of seconds.	0.0 to 25.5	1.0sec	No	A	A	A	A	A
b5-15	PID Sleep Function Start Level PID Sleep Level	Sets the sleep function start frequency. Note: Enabled even when PID control mode has not been selected.	0.0 to 400.0	0.0Hz	No	A	A	A	A	A
b5-16	PID Sleep Delay Time PID Sleep Time	Sets the sleep function delay time in terms of 0.1 seconds.	0.0 to 25.5	0.0sec	No	A	A	A	A	A
b5-17	PID Accel/ Decel Time PID SFS Time	Applies an accel/decel time to the PID setpoint reference. The Drive's standard softstarter (C1-xx and S-curve) still affects the output of the PID algorithm.	0.0 to 25.5	0.0sec	No	A	A	A	A	A
H6-01	Terminal RP Pulse Train Input Function Selection Pulse Input Sel	Selects the function of pulse train terminal RP. 0: Frequency reference 1: PID feedback value 2: PID setpoint value	0 to 2	0	No	A	A	A	A	A

Parameter Number	Name: Display	Description	Output Signal Level During Multi-Function Analog Output	Min. Unit	Control Methods: V/f	V/f with PG	Open Loop Vector 1	Flux Vector	Open Loop Vector 2
U1-24	PI Feedback Value PID Feedback	Feedback signal level when PID control is used.	10V: Maximum Frequency (possible for -10V thru +10V)	0.01 %	A	A	A	A	A
U1-36	PID Input PID Input	Input error to the PID regulator (PID Setpoint - PID Feedback).	10V: Maximum Frequency (possible for -10V thru +10V)	0.01 %	A	A	A	A	A
U1-37	PID Output PID Output	Output of the PID regulator as a percentage of maximum frequency (E1-04).	10V: Maximum Frequency (possible for -10V thru +10V)	0.01 %	A	A	A	A	A
U1-38	PID Setpoint PID Setpoint	Setpoint of the PID regulator (PID reference + PID bias).	10V: Maximum Frequency	0.01 %	A	A	A	A	A

Multi-Function Contact Inputs (H1-01 to H1-10)

Setting Value	Function	Control Methods: V/f	V/f with PG	Open Loop Vector 1	Flux Vector	Open Loop Vector 2
19	PID control disable (ON: PID control disabled)	Yes	Yes	Yes	Yes	Yes
30	PID control integral reset (reset when reset command is input or when stopped during PID control)	Yes	Yes	Yes	Yes	Yes
31	PID control integral hold (ON: Hold)	Yes	Yes	Yes	Yes	Yes
34	PID soft starter	Yes	Yes	Yes	Yes	Yes
35	PID input characteristics switch	Yes	Yes	Yes	Yes	Yes

Multi-Function Analog Input (H3-05, H3-09)

Setting Value	Function	Contents (100%)	Control Methods: V/f	V/f with PG	Open Loop Vector 1	Flux Vector	Open Loop Vector 2
B	PID feedback	Maximum output frequency	Yes	Yes	Yes	Yes	Yes
C	PID target value	Maximum output frequency	Yes	Yes	Yes	Yes	Yes

■PID Control Methods

There are four PID control methods. Select the method by setting parameter b5-01.

Set Value	Control Method
1	PID output becomes the Drive output frequency, and D control is used in the difference between PID target value and feedback value.
2	PID output becomes the Drive output frequency, and D control is used in the PID feedback value.
3	PID output is added as compensation value of the Drive output frequency, and D control is used in the difference between PID target value and feedback value.
4	PID output is added as compensation value of the Drive output frequency, and D control is used in the PID feedback value.

■PID Input Methods

Enable PID control using parameter b5-01, and set the PID target value and PID feedback value.

PID Target Value Input Methods

Select the PID control target value input method according to the setting in b1-01 (Reference Selection). Normally, the frequency reference selected in b1-01 is the PID target value, but you can also set the PID target value as shown in the following table.

PID Target Input Method	Setting Conditions
Multi-Function Analog Terminal A2 Input	Set H3-05 or H3-09 to C (PID target value). Also, be sure to set H6-01 (pulse train input function selection) to 1 (PID feedback value).
MODBUS register 0006H	Set MODBUS bit 1 in register address 000FH to 1 to be able to use register number 0006H as the PID target value.
Pulse train input	Set H6-01 to 2 (PID target value).

PID Feedback Input Methods

Select one of the following PID control feedback input methods.

Input Method	Setting Conditions
Multi-function analog input	Set H3-09 (Multi-function Analog Input Terminal A2 Selection) or H3-05 (Multi-function Analog Input Terminal A3 Function Selection) to B (PID feedback).
Pulse train input	Set H6-01 to 1 (PID feedback).

INFO

Adjust PID target value and PID feedback value using the following items.

- Analog input: Adjust using the analog input terminal gain and bias.
- Pulse train input: Adjust using pulse train scaling, pulse train input gain, and pulse train input bias.

■PID Adjustment Methods

Use the following procedure to adjust PID while performing PID control and measuring the response waveform.

1. Set b5-01 (PID Control Mode Selection) to 1 or 2 (PID control enabled).
2. Increase b5-02 (Proportional Gain (P)) to within a range that does not vibrate.
3. Reduce b5-03 (Integral (I) time) to within a range that does not vibrate.
4. Increase b5-05 (Derivative (D) time) to within a range that does not vibrate.

■PID Fine Adjustment Methods

This section explains the fine adjustment of PID after setting the PID control parameters.

Suppressing Overshoot

If overshoot occurs, reduce derivative time (D), and increase integral time (I).

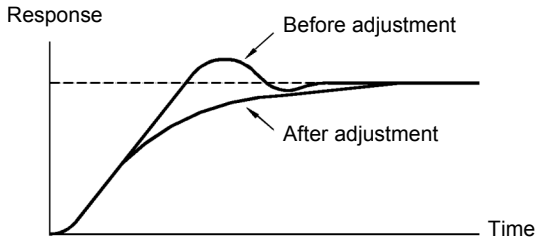

Set a Rapidly Stabilizing Control Condition

To rapidly stabilize the control even if overshoot occurs, reduce integral time (I), and lengthen derivative time (D).

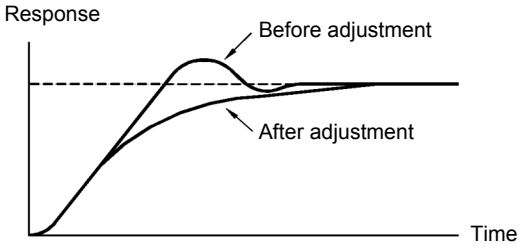

Suppressing Long-cycle Vibration

If vibration occurs with a longer cycle than the integral time (I) set value, the integral operation is too strong. Lengthen the integral time (I) to suppress the vibration.

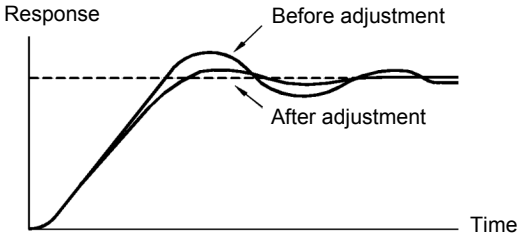

Suppressing Short Cycle Vibration

If vibration occurs when the vibration cycle is short, and the cycle is almost identical to the derivative time (D) set value, the differential operation is too strong. Shorten the derivative time (D) to suppress the vibration.

If vibration continues even when the derivative time (D) is set to 0.00 (D control disabled), reduce the proportional gain (P), or increase the PID primary delay time constant.

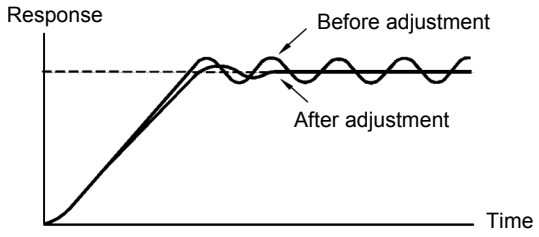

■Setting Precautions

- In PID control, the b5-04 parameter is used to prevent the calculated integral control value from exceeding a specified amount. When the load varies rapidly, Drive response is delayed, and the machine may be damaged or the motor may stall. In this case, reduce the set value to speed up Drive response.
- The b5-06 parameter is used to prevent the arithmetic operation following the PID control calculation from exceeding a specified amount. Set taking the maximum output frequency to be 100%.
- The b5-07 parameter is used to adjust PID control offset. Set in increments of 0.1%, taking the maximum output frequency to be 100%.
- Set the low pass filter time constant for the PID control output in b5-08. Enable this parameter to prevent machinery resonance from occurring when machinery adhesive abrasion is great, or rigidity is poor. In this case, set the parameter to be greater than the resonance frequency cycle. Increase this time constant to reduce Drive responsiveness.
- Using b5-09, you can invert the PID output polarity. Consequently, if you increase the PID target value, you can apply this parameter to applications to lower the Drive output frequency.
- Using b5-10, you can apply gain to the PID control output. Enable this parameter to adjust the amount of compensation if adding PID control output to the frequency reference as compensation.
- When PID control output is negative, you can use parameter b5-11 to invert the Drive. When b1-04 (Prohibition of Reverse Operation) is set to 1 (enabled), however, PID output limit is 0.
- With the Drive, by setting an independent acceleration/deceleration time in parameter b5-17, you can increase or decrease the PID target value using the acceleration/deceleration time. The acceleration/deceleration function (parameter C1) used normally, however, is allocated after PID control, so depending on the settings, resonance with PID control and hunting in the machinery may occur. If this happens, reduce parameter C1 until hunting does not occur, and maintain the acceleration/deceleration time using b5-17. Also, you can disable the set value in b5-17 from the external terminals during operation using multi-function input set value 34 (PID soft starter).

■PID Control Block

The following diagram shows the PID control block in the Drive.

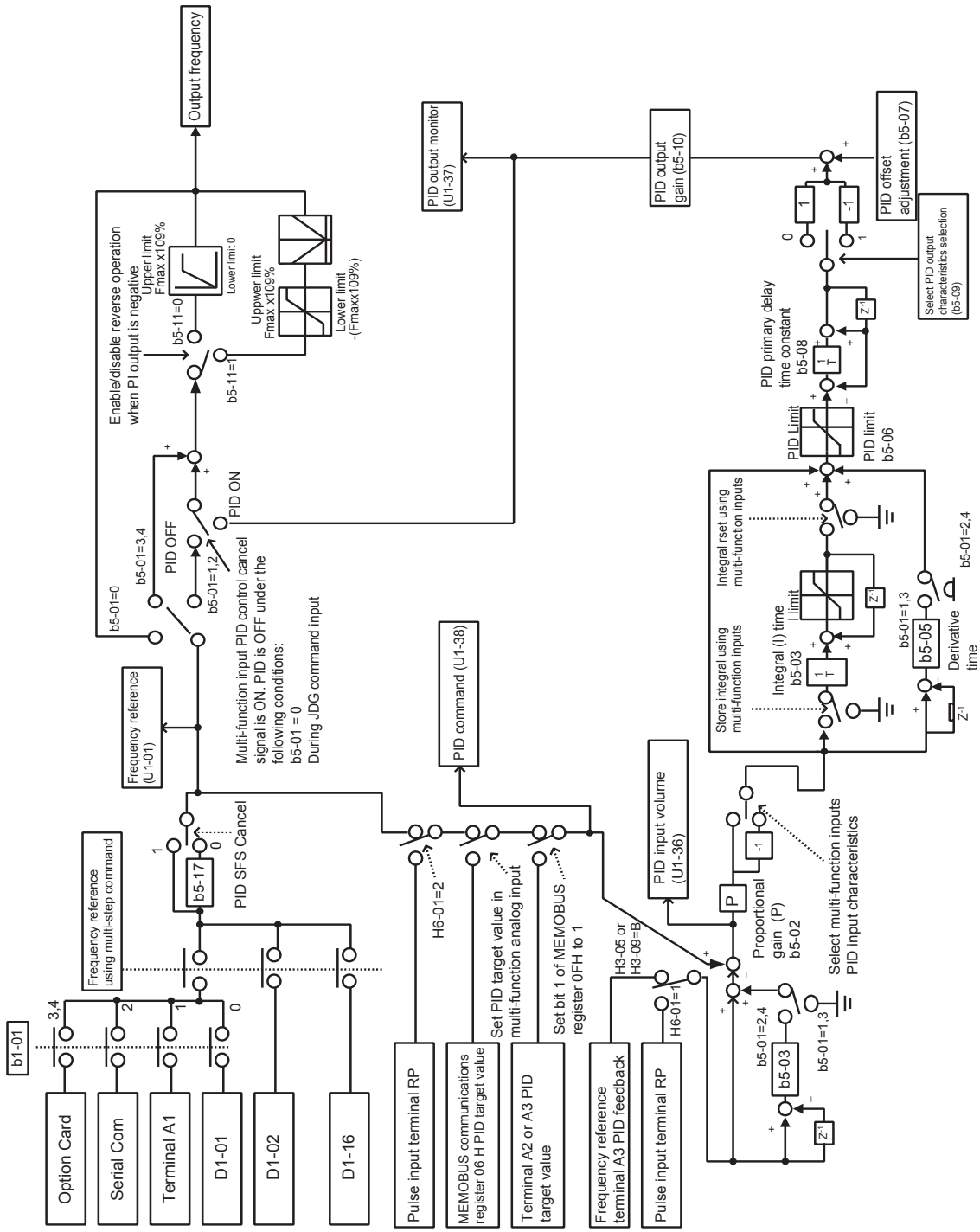

Fig 6.60 PID Control Block

■PID Feedback Loss Detection

When performing PID control, be sure to use the PID feedback loss detection function. If PID feedback is lost, the Drive output frequency may accelerate to the maximum output frequency.

When setting b5-12 to 1 and the status of the PID feedback value detection level in b5-13 is insufficient and continues for the time set in b5-14, an FbL (PID feedback reference lost) alarm will be displayed on the Digital Operator and Drive operation will continue.

When b5-12 is set to 2, an FbL (PID feedback reference lost) error alarm will be displayed on the Digital Operator, the error contact will operate, and Drive operation will be stopped.

The time chart for PID feedback loss detection (set b5-12 to 2) is shown below.

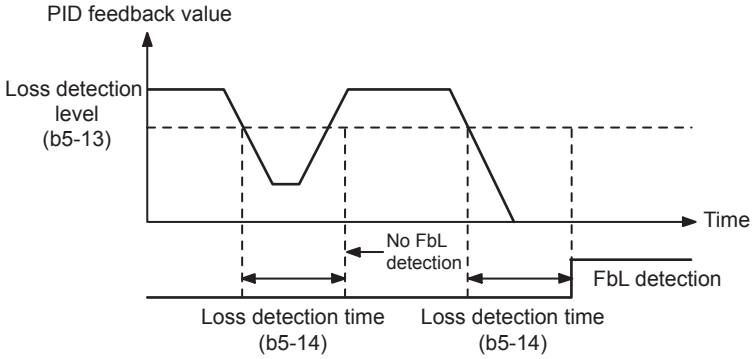

Fig 6.61 PID Feedback Loss Detection Time Chart

■PID Sleep

The PID sleep function stops the Drive when the PID sleep function delay time continues while the PID control target value is at an insufficient level to operate the PID sleep function. When the PID sleep delay time continues and the PID control target value is above the PID sleep function operation level, Drive operation will automatically resume.

When PID control is disabled, the PID sleep function is also disabled. When using the PID sleep function, select decelerate to stop or coast to stop as the stopping method.

The PID sleep time chart is shown below.

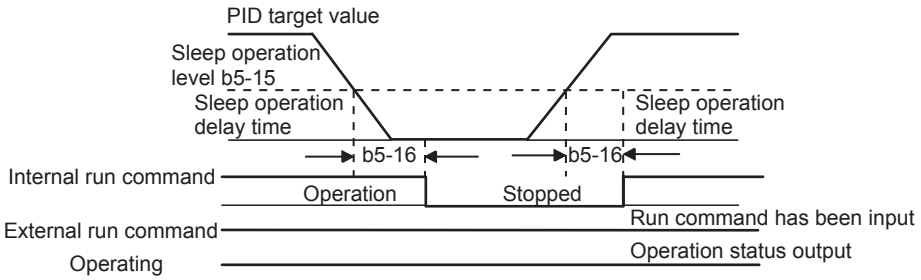

Fig 6.62 PID Sleep Time Chart

◆ Energy-saving

To perform energy saving, set b8-01 (Energy Saving Mode Selection) to 1. Energy-saving control can be performed using both V/f control and open-loop vector control. The parameters to be adjusted are different for each. In V/f control, adjust b8-04 to b8-06, and in vector control, adjust b8-02 and b8-03.

■Related Parameters

Parameter Number	Name: Display	Description	Setting Range	Factory Setting	Change during Operation	Control Methods: V/f	V/f with PG	Open Loop Vector 1	Flux Vector	Open Loop Vector 2
b8-01	Energy Saving Control Selection / Energy Save Sel	Energy Savings function enable/ disable selection. 0: Disabled 1: Enabled	0 or 1	0	No	A	A	A	A	A
b8-02	Energy Saving Gain / Energy Save Gain	Sets energy savings control gain when in vector control mode.	0.0 to 10.0	0.7 *1	Yes	No	No	A	A	A
b8-03	Energy Saving Control Filter Time Constant / Energy Save F.T	Sets energy saving control filter time constant when in vector control mode.	0.00 to 10.0	0.50sec *2	Yes	No	No	A	A	A
b8-04	Energy Saving Coefficient Value / Energy Save COEF	Used to fine-tune the energy savings function when in V/f Control Mode.	0.0 to 655.00	*3 *4	No	A	A	No	No	No
b8-05	Power Detection Filter Time / kW Filter Time	Used to fine-tune the energy savings function when in V/f Control Mode.	0 to 2000	20ms	No	A	A	No	No	No
b8-06	Search Operation Voltage Limit / Search V Limit	Used to fine-tune the energy savings function when in V/f Control Mode.	0 to 100	0%	No	A	A	No	No	No
E2-02	Motor Rated Slip / Motor Rated Slip	Sets the motor rated slip in hertz (Hz). This value is automatically set during rotational Auto-Tuning.	0.00 to 20.00	2.90Hz *4	No	A	A	A	A	A
E2-11	Motor Rated Output / Mtr Rated Power	Sets the motor rated power in kilowatts (kW). This value is automatically set during Auto-Tuning. 1HP = 0.746kW	0.00 to 650.00	0.40kW *3	No	Q	Q	Q	Q	Q

* 1. Set to 1.0 in Vector Control Mode with PG.
* 2. Initial settings vary based on drive capacity and control mode.
* 3. Caution: Initial settings will vary based on motor capacity
* 4. Initial/Default settings vary based on drive capacity. Values shown here are for 200-240V class 0.4kW drives.

■Adjusting Energy-saving Control

The method of adjustment during energy-saving control operations differs depending on the control method. Refer to the following when making adjustments.

V/f Control

In V/f control method, the voltage for optimum motor efficiency is calculated and becomes the output voltage reference.

- b8-04 (Energy-saving Coefficient) is set at the factory for motor use applied to the Drive. If the motor capacity differs from the motor applied to the Drive, set the motor capacity in E2-11 (Motor Rated Output). Also, adjust the output voltage in steps of 5 until it reaches minimum. The larger the energy-saving coefficient, the greater the output voltage.
- To improve response when the load fluctuates, reduce the power detection filter time constant b8-05. If b8-05 is set too small, however, motor rotations when the load is light may become unstable.
- Motor efficiency varies due to temperature fluctuations and differences in motor characteristics. Consequently, control motor efficiency online to optimize efficiency by causing minute variations in voltage using the search operation. Parameter b8-06 (Search Operation Voltage Limiter) controls the range that control the voltage using the search operation. For 200-240V Class Drives, set the range to 100%/200 V, and for 380-480V Class Drives, set the range to 100%/380-480 V. Set to 0 to disable the search operation.

Vector Control

In vector control method, control the slip frequency so that motor efficiency is maximized.

- Taking the motor rated slip for the base frequency as optimum slip, calculate the optimum slip for motor efficiency for each frequency. In vector control, be sure to perform autotuning, and set the motor rated slip.
- If the motor performs hunting when using energy-saving control in vector control, reduce the set value in b8-02 (Energy-saving Gain), or increase the set value in b8-03 (Energy-saving Filter Time Constant).

◆ Setting Motor Parameters

In vector control method, the motor parameters are set automatically using autotuning. If autotuning does not complete normally, set them manually.

■Related Parameters

Parameter Number	Name: Display	Description	Setting Range	Factory Setting	Change during Operation	Control Methods: V/f	V/f with PG	Open Loop Vector 1	Flux Vector	Open Loop Vector 2
E2-01	Motor Rated Current Motor Rated FLA	Sets the motor nameplate full load current in amperes (A). This value is automatically set during Auto-Tuning.	0.32 to 6.40 *2	1.90 A *1	No	Q	Q	Q	Q	Q
E2-02	Motor Rated Slip Motor Rated Slip	Sets the motor rated slip in hertz (Hz). This value is automatically set during rotational Auto-Tuning.	0.00 to 20.00	2.90Hz *1	No	A	A	A	A	A

Parameter Number	Name: Display	Description	Setting Range	Factory Setting	Change during Operation	Control Methods: V/f	V/f with PG	Open Loop Vector 1	Flux Vector	Open Loop Vector 2
E2-03	Motor No-Load Current / No-Load Current	Sets the magnetizing current of the motor as a percentage of full load amps (E2-01). This value is automatically set during rotational Auto-Tuning.	0.00 to 1.89 *3	1.20 A *1	No	A	A	A	A	A
E2-04	Number of Motor Poles / Number of Poles	Sets the number of motor poles. This value is automatically set during Auto-Tuning.	2 to 48	4 poles	No	No	Q	No	Q	Q
E2-05	Motor Line-to-Line Resistance / Term Resistance	Sets the phase-to-phase motor resistance in ohms. This value is automatically set by Auto-Tuning.	0.000 to 65.000	9.842 Ω *1	No	A	A	A	A	A
E2-06	Motor Leakage Inductance / Leak Inductance	Sets the voltage drop due to motor leakage inductance as a percentage of motor rated voltage. This value is automatically set during Auto-Tuning.	0.0 to 40.0	18.2% *1	No	No	No	A	A	A
E2-07	Motor Iron-core Saturation Coefficient 1 / Saturation Comp1	Sets the motor iron saturation coefficient at 50% of magnetic flux. This value is automatically set during rotational Auto-Tuning.	0.00 to 0.50	0.50	No	No	No	A	A	A
E2-08	Motor Iron-core Saturation Coefficient 2 / Saturation Comp2	Sets the motor iron saturation coefficient at 75% of magnetic flux. This value is automatically set during rotational Auto-Tuning.	0.00 to 0.75	0.75	No	No	No	A	A	A
E2-10	Motor Iron Loss for Torque Compensation / Tcomp Iron Loss	Sets the motor iron loss in watts (W).	0 to 65535	14 W *1	No	A	A	No	No	No

* 1. Initial/Default settings vary based on drive capacity. Values shown here are for 200-240V class 0.4kW drives.
* 2. The setting range is 10% to 200% of the drive's rated current. Values shown here are for 200-240V class 0.4kW drives.
* 3. The setting range will vary based on drive capacity. Values shown here are for 200-240V class 0.4kW drives.

■Manual Motor Parameter Setting Methods

The motor parameter settings methods are given below. Make (enter) settings referring to the motor test report.

Motor Rated Voltage Setting

Set E2-01 to the rated current on the motor nameplate.

Motor Rated Slip Setting

Set E2-02 to the motor rated slip calculated from the number of rated rotations on the motor nameplate.

Amount of motor rated slip = Motor rated frequency (Hz) - No. of rated rotations (min^{-1}) x No. of motor poles/120.

Motor No-Load Current Setting

Set E2-03 to the motor no-load current using the rated voltage and rated frequency. The motor no-load current is not normally written on the motor nameplate. Consult the motor manufacturer.

Factory setting is the no-load current value for a standard Yaskawa 4-pole motor.

Number of Motor Poles Setting

E2-04 is displayed only when V/f control method with PG is selected. Set the number of motor poles (number of poles) as written on the motor nameplate.

Motor Line-to-Line Resistance Setting

E2-05 is set automatically when performing motor line-to-line resistance autotuning. When you cannot perform tuning, consult the motor manufacturer for the line-to-line resistance value. Calculate the resistance from the line-to-line resistance value in the motor test report using the following formula, and then make the setting accordingly.

- E-type isolation: [Line-to line resistance (Ω) at 75°C of test report] × 0.92 (Ω)
- B-type isolation: [Line-to line resistance (Ω) at 75°C of test report] × 0.92 (Ω)
- F-type isolation: [Line-to line resistance (Ω) at 115°C of test report] × 0.87 (Ω)

Motor Leak Inductance Setting

Set the amount of voltage drop due to motor leak inductance in E2-06 using the percentage over the motor rated voltage. Make this setting when the high-speed motor inductance is small. If the inductance is not written on the motor nameplate, consult the motor manufacturer.

Motor Iron Saturation Coefficients 1 and 2 Settings

E2-07 and E2-08 are set automatically using autotuning.

Motor Iron Loss for Torque Compensation Setting

E2-10 is displayed only when in V/f control method. To increase the torque compensation accuracy when in V/f control method, set the motor iron loss in Watts.

Motor Mechanical Loss

When using flux vector control, adjust mechanical loss in the following cases. (There is normally no reason to make this adjustment.) The mechanical loss setting is used to compensate the torque.

- There is excessive torque loss from the motor bearings.
- There is excessive torque loss from a fan, pump, etc.

◆ Setting the V/f Pattern

In V/f control method, you can set the Drive input voltage and the V/f pattern as the need arises.

■Related Parameters

Parameter Number	Name: Display	Description	Setting Range	Factory Setting	Change during Operation	Control Methods: V/f	V/f with PG	Open Loop Vector 1	Flux Vector	Open Loop Vector 2
E1-01	Input voltage setting / Input Voltage	Set the Drive input voltage in 1 volt. This setting is used as a reference value in protection functions.	155.0 to 255.0 (240V) 310.0 to 510.0 (480V)*1	230.0V or 460.0V *1	No	Q	Q	Q	Q	Q
E1-03	V/f pattern selection / V/F Selection	0 to E: Select from the 15 preset patterns. F: Custom user-set patterns (Applicable for settings E1-04 to E1-10.)	0 to F	F	No	Q	Q	No	No	No
E1-04	Max. output frequency / Max Frequency	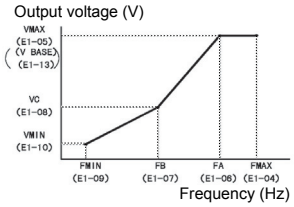 To set V/f characteristics in a straight line, set the same values for E1-07 and E1-09. In this case, the setting for E1-08 will be disregarded. Always ensure that the four frequencies are set in the following manner: E1-04 (FMAX) ≥ E1-06 (FA) > E1-07 (FB) ≥ E1-09 (FMIN)	40.0 to 400.0*5	60.0Hz *2	No	Q	Q	Q	Q	Q
E1-05	Max. voltage / Max Voltage		0.0 to 255.0 *1	230.0V or 460.0V* 1*2	No	Q	Q	Q	Q	Q
E1-06	Base frequency / Base Frequency		0.0 to 400.0*5	60.0Hz *2	No	Q	Q	Q	Q	Q
E1-07	Mid. output frequency / Mid Frequency A		0.0 to 400.0	3.0Hz *2	No	A	A	A	No	No
E1-08	Mid. output frequency voltage / Mid Voltage A		0.0 to 255.0 *1	12.6Vac or 25.3 *1 *2	No	A	A	A	No	No
E1-09	Min. output frequency / Min Frequency		0.0 to 400.0*5	0.5Hz *2	No	Q	Q	Q	A	Q
E1-10	Min. output frequency voltage / Min Voltage		0.0 to 255.0 *1	2.3Vac or 4.6Vac *1 *2	No	A	A	A	No	No

Parameter Number	Name	Description	Setting Range	Factory Setting	Change during Operation	Control Methods				
	Display					V/f	V/f with PG	Open Loop Vector 1	Flux Vector	Open Loop Vector 2
E1-11	Mid. output frequency 2	Set only to fine-adjust V/f for the output range. Normally, this setting is not required.	0.0 to 400.0*5	0.0Hz *3	No	A	A	A	A	A
	Mid Frequency B									
E1-12	Mid. output frequency voltage 2		0.0 to 255.0 *1	0.0 V *3	No	A	A	A	A	A
	Mid Voltage B									
E1-13	Base voltage		0.0 to 255.0 *1	0.0 V *4	No	A	A	Q	Q	Q
	Base Voltage									

* 1. These are values for a 200-240V Class Drive. Values for a 380-480V Class Drive are double.
* 2. The factory setting will change when the control method is changed. (Open-loop vector control factory settings are given.)
* 3. The contents of parameters E1-11 and E1-12 are ignored when set to 0.00.
* 4. E1-13 is set to the same value as E1-05 by autotuning.
* 5. The setting range is 0 to 66.0 for open-loop vector control 2.

■Setting Drive Input Voltage E1-01

Setting Range: 155.0V to 255.0V (200-240V Models)
310.0V to 510.0V (380-480V Models)

Factory Defaults: 240.0V (200-240V Models)
480.0V (380-480V Models)

Set the Input Voltage parameter (E1-01) to the nominal voltage of the connected AC power supply. This parameter adjusts the levels of some protective features of the Drive (i.e. Overvoltage, Stall Prevention, etc.). E1-01 also serves as the Maximum/Base Voltage used by the Preset V/Hz curves (E1-03= 0 to E).

WARNING DRIVE INPUT VOLTAGE (NOT MOTOR VOLTAGE) MUST BE SET IN E1-01 FOR THE PROTECTIVE FEATURES OF THE DRIVE TO FUNCTION PROPERLY. FAILURE TO DO SO MAY RESULT IN EQUIPMENT DAMAGE AND/OR PERSONAL INJURY.

■ E1-03 V/f Pattern Selection

Setting	Description
0	50 Hz
1	60 Hz Saturation
2	50 Hz Saturation
3	72 Hz
4	50 Hz VT1
5	50 Hz VT2
6	60 Hz VT1
7	60 Hz VT2
8	50 Hz HST1
9	50 Hz HST2
A	60 Hz HST1
B	60 Hz HST2
C	90 Hz
D	120 Hz
E	180 Hz
F	Custom V/f (*factory default, with parameter values per setting 1*)
FF	Custom w/o limit

The Drive operates utilizing a set V/f pattern to determine the appropriate output voltage level for each commanded speed. There are 15 different preset V/f patterns to select from with varying voltage profiles, saturation levels (frequency at which maximum voltage is reached), and maximum frequencies.

There are also settings for Custom V/f patterns that will allow the programmer to manually set (“Customize”) the V/f pattern using parameters E1-04 through E1-13.

Using parameter E1-03, the programmer can select one of the preset V/f patterns or chose between a custom V/f pattern with an upper voltage limit (E1-03= “F: Custom V/F”) and a custom V/f pattern without a voltage limit (E1-03= “FF: Custom w/o limit”).

■ E1-04 Maximum Output Frequency

Setting Range: 0.0 to 400.0Hz
Factory Default: 60.0Hz

■ E1-05 Maximum Output Voltage

Setting Range: 0.0 to 255.0V (200-240V Models)
0.0 to 510.0V (380-480V Models)

Factory Defaults: 230.0V (200-240V Models)
480.0V (380-480V Models)

■ E1-06 Base Frequency

Setting Range: 0.0 to 400.0Hz
Factory Default: 60.0Hz

■ E1-07 Mid Output Frequency A

Setting Range: 0.0 to 400.0Hz
Factory Default: 3.0Hz

■ E1-08 Mid Output Voltage A

Setting Range: 0.0 to 255.0V (200-240V Models)
0.0 to 510.0V (380-480V Models)

Factory Defaults: 12.6V (200-240V Models)
25.2V (380-480V Models)

■ E1-09 Minimum Output Frequency

Setting Range: 0.0 to 400.0Hz
Factory Default: 0.5Hz

■ E1-10 Minimum Output Voltage

Setting Range: 0.0 to 255.0V (200-240V Models)
0.0 to 510.0V (380-480V Models)

Factory Defaults: 2.3V (200-240V Models)
4.6V (380-480V Models)

■ E1-11 Mid Output Frequency B

Setting Range: 0.0 to 400.0Hz
Factory Default: 0.0Hz

■ E1-12 Mid Output Voltage B
E1-13 Base Voltage

Setting Range: 0.0 to 255.0V (200-240V Models)
0.0 to 510.0V (380-480V Models)

Factory Defaults: 0.0V (200-240V Models)
0.0V (380-480V Models)

To set up a custom V/f pattern, program the points shown in the diagram below using parameters E1-04 through E1-13. Be sure that the following condition is true:: E1-09 ≤ E1-07 ≤ E1-06 ≤ E1-11 ≤ E1-04

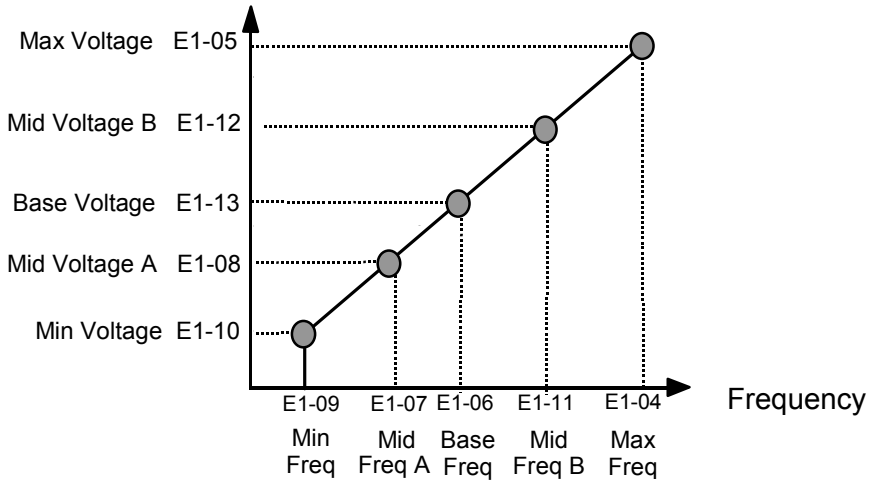

Fig.38 Custom V/f Pattern Programming Curve

Increasing the voltage in the V/f pattern increases the available motor torque. However, when setting a custom V/f pattern, increase the voltage gradually while monitoring the motor current, to prevent:

- Drive faults as a result of motor over-excitation
- Motor overheating or excessive vibration

Table 9 V/f Pattern Default Settings for Drive Capacity 0.4~1.5kW for 240V Class

Parameter No.	Name	Unit	Factory Setting							
E1-03	V/f Pattern Selection	—	0	1	2	3	4	5	6	7
E1-04	Max Output Frequency	Hz	50.0	60.0	60.0	72.0	50.0	50.0	60.0	60.0
E1-05	Max Output Voltage	V	240.0	240.0	240.0	240.0	240.0	240.0	240.0	240.0
E1-06	Base Frequency	Hz	50.0	60.0	50.0	60.0	50.0	50.0	60.0	60.0
E1-07	Mid Output Frequency A	V	2.5	3.0	3.0	3.0	25.0	25.0	30.0	30.0
E1-08	Mid Output Voltage A	V	17.2	17.2	17.2	17.2	40.2	57.5	40.2	57.5
E1-09	Min Output Frequency	Hz	1.3	1.5	1.5	1.5	1.3	1.3	1.5	1.5
E1-10	Mid Output Voltage	V	10.3	10.3	10.3	10.3	9.2	10.3	9.2	10.3
E1-11	Mid Output Frequency B	Hz	0	0	0	0	0	0	0	0
E1-12	Mid Output Voltage B	V	0	0	0	0	0	0	0	0
E1-13	Base Voltage	V	0	0	0	0	0	0	0	0

For 480V class units, the value is twice that of 240V class units.

Table 9 V/f Pattern Default Settings for Drive Capacity 0.4~1.5kW for 240V Class (Continued)										
Parameter No.	Name	Unit	Factory Setting							
E1-03	V/f Pattern Selection	—	8	9	A	B	C	D	E	F
E1-04	Max. Output Frequency	Hz	50.0	50.0	60.0	60.0	90.0	120.0	180.0	60.0
E1-05	Max. Output Voltage	V	240.0	240.0	240.0	240.0	240.0	240.0	240.0	240.0
E1-06	Base Frequency	Hz	50.0	50.0	60.0	60.0	60.0	60.0	60.0	60.0
E1-07	Mid. Output Frequency A	V	2.5	2.5	3.0	3.0	3.0	3.0	3.0	3.0
E1-08	Mid. Output Voltage A	V	21.8	27.6	21.8	27.6	17.2	17.2	17.2	17.2
E1-09	Min. Output Frequency	Hz	1.3	1.3	1.5	1.5	1.5	1.5	1.5	1.5
E1-10	Mid. Output Voltage	V	12.6	14.9	12.6	17.2	10.3	10.3	10.3	10.3
E1-11	Mid Output Frequency B	Hz	0	0	0	0	0	0	0	0
E1-12	Mid Output Voltage B	V	0	0	0	0	0	0	0	0
E1-13	Base Voltage	V	0	0	0	0	0	0	0	0
For 480V class units, the value is twice that of 240V class units.										

Table 10 V/f Pattern Default Settings for Drive Capacity 2.2~45kW for 240V Class										
Parameter No.	Name	Unit	Factory Setting							
E1-03	V/f Pattern Selection	—	0	1	2	3	4	5	6	7
E1-04	Max. Output Frequency	Hz	50.0	60.0	60.0	72.0	50.0	50.0	60.0	60.0
E1-05	Max. Output Voltage	V	240.0	240.0	240.0	240.0	240.0	240.0	240.0	240.0
E1-06	Base Frequency	Hz	50.0	60.0	50.0	60.0	50.0	50.0	60.0	60.0
E1-07	Mid. Output Frequency A	V	2.5	3.0	3.0	3.0	25.0	25.0	30.0	30.0
E1-08	Mid. Output Voltage A	V	16.1	16.1	16.1	16.1	40.2	57.5	40.2	57.5
E1-09	Min. Output Frequency	Hz	1.3	1.5	1.5	1.5	1.3	1.3	1.5	1.5
E1-10	Mid. Output Voltage	V	8.0	8.0	8.0	8.0	6.9	8.0	6.9	8.0
E1-11	Mid Output Frequency B	Hz	0	0	0	0	0	0	0	0
E1-12	Mid Output Voltage B	V	0	0	0	0	0	0	0	0
E1-13	Base Voltage	V	0	0	0	0	0	0	0	0
For 480V class units, the value is twice that of 240V class units.										

Table 10 V/f Pattern Default Settings for Drive Capacity 2.2~45kW for 240V Class (Continued)

Parameter No.	Name	Unit	Factory Setting							
E1-03	V/f Pattern Selection	—	8	9	A	B	C	D	E	F
E1-04	Max. Output Frequency	Hz	50.0	50.0	60.0	60.0	90.0	120.0	180.0	60.0
E1-05	Max. Output Voltage	V	240.0	240.0	240.0	240.0	240.0	240.0	240.0	240.0
E1-06	Base Frequency	Hz	50.0	50.0	60.0	60.0	60.0	60.0	60.0	60.0
E1-07	Mid. Output Frequency A	V	2.5	2.5	3.0	3.0	3.0	3.0	3.0	3.0
E1-08	Mid. Output Voltage A	V	20.7	26.4	20.7	26.4	16.1	16.1	16.1	16.1
E1-09	Min. Output Frequency	Hz	1.3	1.3	1.5	1.5	1.5	1.5	1.5	1.5
E1-10	Mid. Output Voltage	V	10.3	12.6	10.3	14.9	8.0	8.0	8.0	8.0
E1-11	Mid Output Frequency B	Hz	0	0	0	0	0	0	0	0
E1-12	Mid Output Voltage B	V	0	0	0	0	0	0	0	0
E1-13	Base Voltage	V	0	0	0	0	0	0	0	0

For 480V class units, the value is twice that of 240V class units.

Table 11 V/f Pattern Default Settings for Drive Capacity 55~300kW for 240V Class

Parameter No.	Name	Unit	Factory Setting							
E1-03	V/f Pattern Selection	–	0	1	2	3	4	5	6	7
E1-04	Max. Output Frequency	Hz	50.0	60.0	60.0	72.0	50.0	50.0	60.0	60.0
E1-05	Max. Output Voltage	V	240.0	240.0	240.0	240.0	240.0	240.0	240.0	240.0
E1-06	Max. Voltage Frequency	Hz	50.0	60.0	50.0	60.0	50.0	50.0	60.0	60.0
E1-07	Mid. Output Frequency A	V	2.5	3.0	3.0	3.0	25.0	25.0	30.0	30.0
E1-08	Mid. Output Voltage A	V	13.8	13.8	13.8	13.8	40.2	57.5	40.2	57.5
E1-09	Min. Output Frequency	Hz	1.3	1.5	1.5	1.5	1.3	1.3	1.5	1.5
E1-10	Mid. Output Voltage	V	6.9	6.9	6.9	6.9	5.7	6.9	5.7	6.9
E1-11	Mid Output Frequency B	Hz	0	0	0	0	0	0	0	0
E1-12	Mid Output Voltage B	V	0	0	0	0	0	0	0	0
E1-13	Base Voltage	V	0	0	0	0	0	0	0	0

For 480V class units, the value is twice that of 240V class units.

Table 11 V/f Pattern Default Settings for Drive Capacity 55~300kW for 240V Class (Continued)										
Parameter No.	Name	Unit	Factory Setting							
E1-03	V/f Pattern Selection	–	8	9	A	B	C	D	E	F
E1-04	Max. Output Frequency	Hz	50.0	50.0	60.0	60.0	90.0	120.0	180.0	60.0
E1-05	Max. Output Voltage	V	240.0	240.0	240.0	240.0	240.0	240.0	240.0	240.0
E1-06	Base Frequency	Hz	50.0	50.0	60.0	60.0	60.0	60.0	60.0	60.0
E1-07	Mid. Output Frequency A	V	2.5	2.5	3.0	3.0	3.0	3.0	3.0	3.0
E1-08	Mid. Output Voltage A	V	17.2	23.0	17.2	23.0	13.8	13.8	13.8	13.8
E1-09	Min. Output Frequency	Hz	1.3	1.3	1.5	1.5	1.5	1.5	1.5	1.5
E1-10	Mid. Output Voltage	V	8.0	10.3	8.0	12.6	6.9	6.9	6.9	6.9
E1-11	Mid Output Frequency B	Hz	0	0	0	0	0	0	0	0
E1-12	Mid Output Voltage B	V	0	0	0	0	0	0	0	0
E1-13	Base Voltage	V	0	0	0	0	0	0	0	0
For 480V class units, the value is twice that of 240V class units.										

Table 8 Preset V/f Patterns

	Specifications		E1-03	V/f Pattern *1		Specifications		E1-03	V/f Pattern *1
General-purpose	50Hz		0	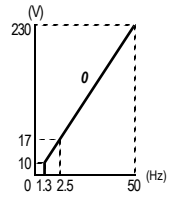	High Starting Torque *2	50Hz	High Starting Torque 1	8	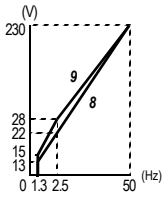
							High Starting Torque 2	9	
	60Hz Saturation		1 F	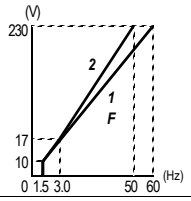		60Hz	High Starting Torque 1	A	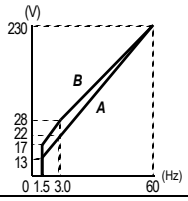
	50Hz Saturation		2				High Starting Torque 2	B	
	72Hz		3	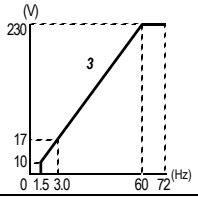	High Speed Operation	90Hz		C	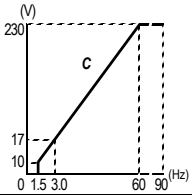
Variable Torque	50Hz	Variable Torque 1	4	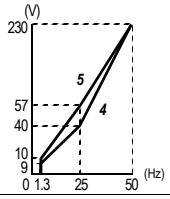		120Hz		D	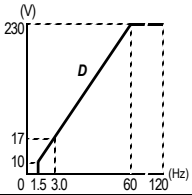
		Variable Torque 2	5						
	60Hz	Variable Torque 1	6	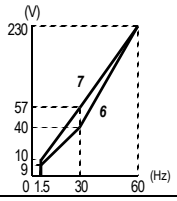		180Hz		E	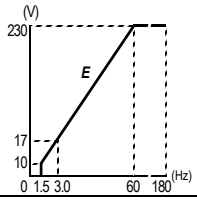
		Variable Torque 2	7						

Fig 6.63 User-Set V/f Pattern

If one of the custom V/f patterns is selected, then parameters E1-04 through E1-13 will determine the V/f pattern.

IMPORTANT When a factory Initialization is performed, the setting of E1-03 is unaffected but the settings of E1-04 through E1-13 are returned to their factory default settings.

■Setting Precautions

When the setting is to user-defined V/f pattern, beware of the following points.

- When changing control method, parameters E1-07 to E1-10 will change to the factory settings for that control method.
- Be sure to set the four frequencies as follows:
  E1-04 (FMAX) ≥ E1-06 (FA) > E1-07 (FB) ≥ E1-09 (FMIN)

◆ Torque Control

With flux vector control or open-loop vector control 2, the motor's output torque can be controlled by a torque reference from an analog input. Set d5-01 to 1 to control torque.

■Related Parameters

Parameter Number	Name: Display	Description	Setting Range	Factory Setting	Change during Operation	Control Methods: V/f	V/f with PG	Open Loop Vector 1	Flux Vector	Open Loop Vector 2
d5-01	Torque Control Selection / Torq Control Sel	Selects speed or torque control. The torque reference is set via analog input A2 or A3 when it is set for "torque reference" (H3-05 or H3-09 = 13). Torque reference is set as a percentage of motor rated torque. To use this function for switching between speed and torque control, set to 0 and set a multi-function input to "speed/ torque control change" (H1-xx = 71). 0: Speed Control (controlled by C5-01 to C5-07) 1: Torque Control	0 to 1	0	No	No	No	No	A	A
d5-02	Torque Reference Delay Time / Torq Ref Filter	Sets the torque reference delay time in milliseconds. This function can be used to correct for noise in the torque control signal or the responsiveness with the host controller. When oscillation occurs during torque control, increase the set value.	0 to 1000	0ms*	No	No	No	No	A	A
d5-03	Speed Limit Selection / Speed Limit Sel	Sets the speed limit command method for the torque control method. 1: Analog Input - Limited by the output of the soft starter (b1-01 selection and active acceleration/ deceleration and S-curve settings). 2: Program Setting - Limited by d5-04 setting value.	1 or 2	1	No	No	No	No	A	A
d5-04	Speed Limit / Speed Lmt Value	Sets the speed limit during torque control as a percentage of the maximum output frequency (E1-04). This function is enabled when d5-03 is set to 2. Directions are as follows. +: run command direction -: run command opposite direction	-120 to +120	0%	No	No	No	No	A	A

Parameter Number	Name: Display	Description	Setting Range	Factory Setting	Change during Operation	Control Methods: V/f	V/f with PG	Open Loop Vector 1	Flux Vector	Open Loop Vector 2
d5-05	Speed Limit Bias Speed Lmt Bias	Sets the speed limit bias as a percentage of the maximum output frequency (E1-04). Bias is given to the specified speed limit. It can be used to adjust the margin for the speed limit.	0 to 120	10%	No	No	No	No	A	A
d5-06	Speed/Torque Control Switchover Timer Ref Hold Time	Sets the delay time from inputting the multi-function input "speed/ torque control change" (from On to OFF or OFF to ON) until the control is actually changed. This function is enabled when the multi-function input "speed/ torque control change" (H1-xx= 71) is set. While in the speed/torque control switching timer, the analog inputs hold the value present when the "speed/ torque control change" is received.	0 to 1000	0ms	No	No	No	No	A	A
H3-04	Terminal A3 Signal Level Selection Term A3 Signal	Sets the signal level of terminal A3. 0: 0 to 10Vdc 1: -10 to +10Vdc	0 to 1	0	No	A	A	A	A	A
H3-05	Terminal A3 Function Selection Terminal A3 Sel	[Refer to table "H3-05, H3-09 Settings" for multi-function selections]	0 to 1F	2	No	A	A	A	A	A
H3-06	Terminal A3 Gain Setting Terminal A3 Gain	Sets the output level when 10V is input.	0.0 to 1000.0	100.0%	Yes	A	A	A	A	A
H3-07	Terminal A3 Bias Setting Terminal A3 Bias	Sets the frequency reference when 0V is input.	-100.0 to +100.0	0.0%	Yes	A	A	A	A	A
H3-08	Terminal A2 Signal Level Selection Term A2 Signal	Selects the signal level of terminal A2. 0: 0 to 10Vdc (switch S1-2 must be in the OFF position). 1: -10 to +10Vdc (switch S1-2 must be in the OFF position). 2: 4 to 20mA (switch S1-2 must be in the ON position) Note: Switch between current or voltage inputs by using (S1-2) switch on the terminal board.	0 to 2	2	No	A	A	A	A	A
H3-09	Terminal A2 Function Selection Terminal A2 Sel	Selects the function of terminal A2. Same choices as Terminal A3 Function Selection (H3-05).	0 to 1F	0	No	A	A	A	A	A

Parameter Number	Name: Display	Description	Setting Range	Factory Setting	Change during Operation	Control Methods: V/f	V/f with PG	Open Loop Vector 1	Flux Vector	Open Loop Vector 2
H3-10	Terminal A2 Gain Setting / Terminal A2 Gain	Sets the output level when 10V is input.	0.0 to 1000.0	100.0%	Yes	A	A	A	A	A
H3-11	Terminal A2 Bias Setting / Terminal A2 Bias	Sets the output level when 0V is input.	-100.0 to +100.0	0.0%	Yes	A	A	A	A	A

* Factory setting will change according to the control mode (factory settings for Flux Vector Control are shown here).

Multi-function Contact Input Functions (H1-01 to H1-10)

Setting Value	Function	Control Methods: V/f	V/f with PG	Open Loop Vector 1	Flux Vector	Open Loop Vector 2
71	Speed/torque control change (ON: Torque control)	No	No	No	Yes	Yes
78	Polarity reverse command for external torque reference	No	No	No	Yes	Yes

Multi-function Contact Output Functions (H2-01 to H2-05)

Setting Value	Function	Control Methods: V/f	V/f with PG	Open Loop Vector 1	Flux Vector	Open Loop Vector 2
32	Speed control circuit operating for torque control (except when stopped). The external torque reference will be limited if torque control is selected. Output when the motor is rotating at the speed limit.	No	No	No	Yes	Yes

Multi-function Analog Inputs (H3-05, H3-09)

Setting Value	Function	Control Methods: V/f	V/f with PG	Open Loop Vector 1	Flux Vector	Open Loop Vector 2
0	Add to terminal A1	Yes	Yes	Yes	Yes	Yes
13	Torque reference/torque limit at speed control	No	No	No	Yes	Yes
14	Torque compensation	No	No	No	Yes	Yes

Monitor Function

Parameter Number	Name: Display	Description	Output Signal Level During Multi-Function Analog Output	Min. Unit	Control Methods: V/f	V/f with PG	Open Loop Vector 1	Flux Vector	Open Loop Vector 2
U1-09	Torque reference / Torque Reference	Monitor in internal torque reference value for vector control.	10 V: Motor rated torque (0 to ± 10V possible)	0.1%	No	No	A	A	A

■Inputting Torque References and Torque Reference Directions

The torque reference can be changed according to an analog input by setting H3-09 (Multi-function analog input terminal A2 selection) or H3-05 (Multi-function analog input terminal A3 selection) to 13 (torque reference) or 14 (torque compensation). The torque reference input methods are listed in the following table.

Torque Reference Input Method	Reference Location	Selection Method	Remarks
Voltage input (0 to ±10 V)	Between A3 and AC	H3-04 = 1 H3-05 = 13	Set H3-04 to 0 for a 0 to 10-V torque reference. To switch the torque reference between positive and negative torque, set a multi-function analog input to 78.
	Between A2 and AC (Turn OFF pin 2 of SW1.)	H3-08 = 1 H3-09 = 13	Set H3-08 to 0 for a 0 to 10-V torque reference. To switch the torque reference between positive and negative torque, set a multi-function analog input to 78. The input can be used for torque compensation by setting H3-09 to 14.
Current input (4 to 20mA)	Between A2 and AC (Turn ON pin 2 of SW1.)	H3-08 = 2 H3-09 = 13	To switch the torque reference between positive and negative torque, set a multi-function analog input to 78. The input can be used for torque compensation by setting H3-09 to 14.
Option Card (AI-14B) (0 to ±10 V)	Between TC2 and TC4	F2-01 = 0 H3-08 = 1 H3-09 = 13	The input can be used for torque compensation by setting H3-05 to 14.

The direction of the torque output from the motor will be determined by the sign of the analog signal input. It does not depend on the direction of the run command. The direction of torque will be as follows:

- Positive analog reference: Torque reference for forward motor rotation (counterclockwise as viewed from the motor output axis).
- Negative analog reference: Torque reference for reverse motor rotation (clockwise as viewed from the motor output axis).

Application Precautions

If the analog signal input level is 0 to 10V or 4 to 20mA, a forward torque reference will not be applied. To apply reverse torque, use an input level of -10V to 10V or switch the direction using a multi-function input set to 78 (polarity reverse command for external torque reference).

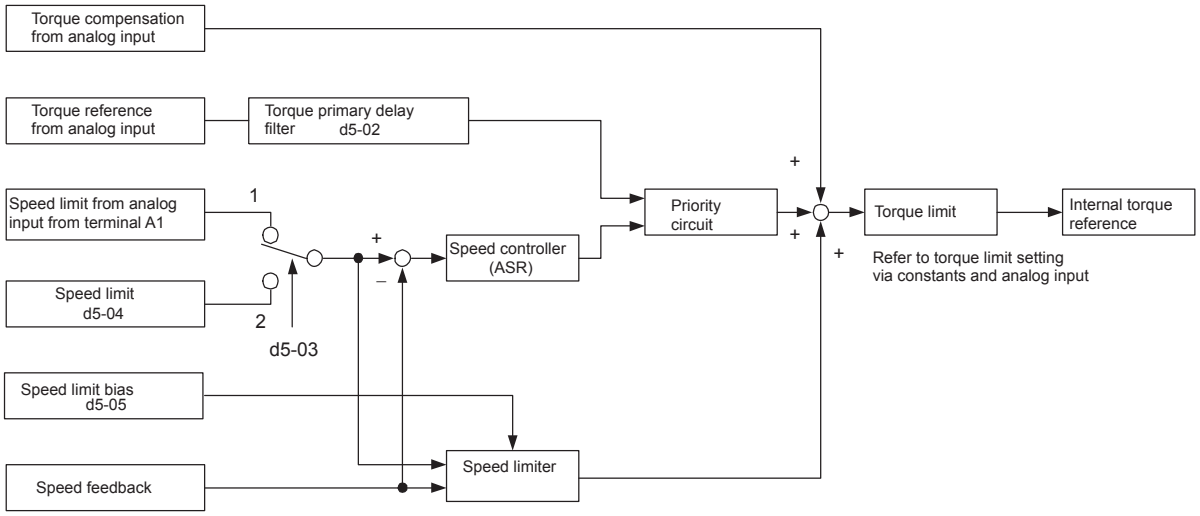

Fig 6.64 Torque Control Block Diagram

■Speed Limiter and Priority Circuit (Speed Limit Function)

If the external torque reference and load are not balanced during torque control, the motor will accelerate in either the forward or reverse direction. The speed limit function is used to limit the speed to a specified value and it consists of the speed limiter circuit and priority circuit.

Application Precautions

There are two ways to set a speed limit: using an input from an analog input terminal and setting a speed limit in d5-04. The inputs methods for a speed limit are listed in the following table.

Speed Limit Input Method	Location of Reference	Parameter Settings	Remarks
Voltage input (0 to ±10 V)	Set in d5-04	d5-03 = 2	-
	Between A1 and AC	b1-01 = 1 H3-01 = 1	Set H3-01 to 0 if the speed limit is always to be positive.
	Between A2 and AC	b1-01 = 0 H3-08 = 1 H3-09 = 1	The value will be added to the value input on A1 to determine the speed limit. Set H3-03 to 0 if the speed limit input on A2 is always to be positive. Turn OFF (V side) pin 2 of DIP switch S1 on the terminal board.
Current input (4 to 20mA)	Between A2 and AC	b1-01 = 0 H3-08 = 2 H3-09 = 1	The value will be added to the value input on A1 to determine the speed limit. Turn ON (I side) pin 2 of DIP switch S1 on the terminal board.
Option Card (AI-4B) (0 to ±10 V)	Between TC1 and TC4	b1-01 = 3 F2-01 = 0	If H3-09 is set to 0, the sum of the input between TC2 and TC4 will be added the input between TC1 and TC4 to determine the speed limit.

IMPORTANT

The direction in which speed is controlled is determined by the sign of the speed limit signal and the direction of the run command.

- Positive voltage applied: The speed in the forward direction will be limited for forward operation.
- Negative voltage applied: The speed in the reverse direction will be limited for reverse operation.

If the direction of motor rotation and the command direction are not the same, speed will be limited to 0 as long as b5-05 is set to 0.

■Speed Limit Bias Setting

The speed limit bias can be set to limit both the forward and reverse speed to the same value. This differs from the operation of the speed limit setting. To use the speed limit bias, set d5-04 to 0 and set the bias in d5-05 as a percentage of the maximum output frequency.

To set 50% forward and reverse speed limits, set the speed limit setting to 0 (d5-03 = 2, d5-04 = 0, and d5-05 = 50). The range of torque control will be from -50% to 50% of the maximum output speed.

When using both the speed limit and the speed limit bias, the range of torque control will be positive and negative speed limits with the speed limit bias added to each.

The range of torque control when the forward speed limit is 50% and the speed limit bias is 10% is shown in the following figure. This figure does not take the priority circuit into account.

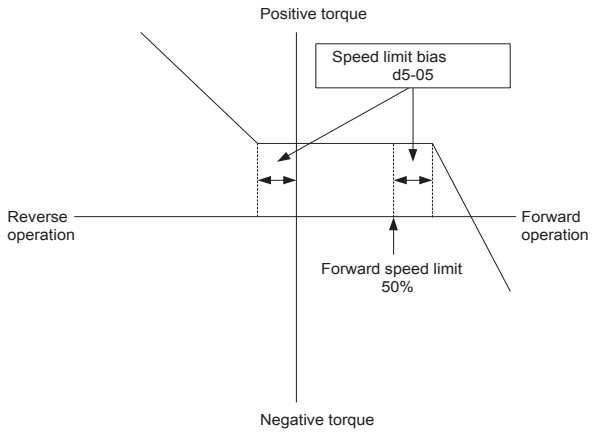

Fig 6.65 Speed Limit Bias Setting

■Torque Limit Operation Examples

Operation examples will be described separately for winding operation, in which the speed and motor torque are in the same directions, and rewinding operation, in which the speed and motor torque are in opposite directions.

Winding Operation

In a winding operation, the line (speed) and torque generated by the motor are in the same direction. For the winding operation, both the speed limit and the torque reference input are positive. The motor will accelerate when the torque reference input is larger than the load and will decelerate when it is smaller than the load. If the motor turns faster than the speed limit, a negative compensation value is output from the speed limiter circuit. When the speed then drops below the speed limit, a positive compensation value is output. The torque compensation is proportional to the ASR proportional gain. When the sum of the torque reference and the torque compensation output by the speed limiter is the same as the actual load, the motor will stop accelerating and run at a constant speed.

Rewinding Operation

In a rewinding operation, the line (speed) and torque generated by the motor are in the opposite directions. (In this example, we'll assume that the line speed is positive and the torque reference input is negative.) For the rewinding operation, the speed limit is positive and the torque reference input is negative. If the motor turns faster than the speed limit, a negative compensation value is output from the speed limiter circuit. If the motor is rotating in reverse, a negative compensation value is output. If the speed is 0 or is below the speed limit, a 0 compensation value is output. In this way, the output from the speed limiter is used to maintain the motor speed between 0 and the speed limit. When the sum of the torque reference and the torque compensation output by the speed limiter is the same as the actual load, the motor will stop accelerating and run at a constant speed.

	Winding Operation		Rewinding Operation	
Configuration	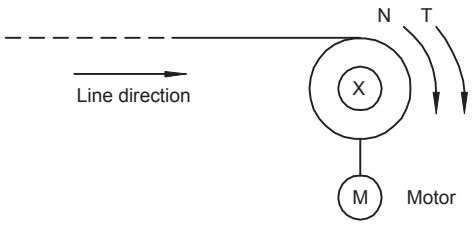		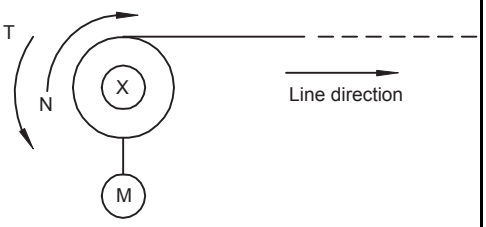	
Normal Rotation Direction	Forward	Reverse	Forward	Reverse
Torque Reference Polarity (TREF)	⊕	⊖	⊖	⊕
Speed Limit Polarity (SLIM)	⊕	⊖	⊕	⊖
Generated Torque	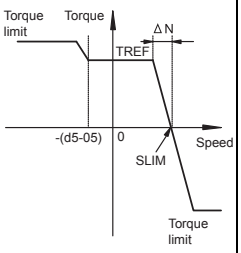 $\Delta N(\%)=\frac{TREF(\%)}{C5\text{-}01}$	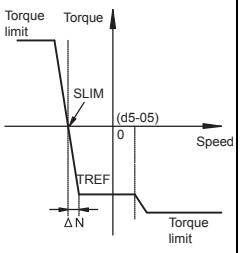 $\Delta N(\%)=\frac{TREF(\%)}{C5\text{-}01}$	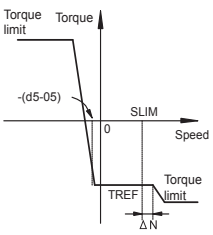 $\Delta N(\%)=\left\{\frac{TREF(\%)}{C5\text{-}01},\ d5\text{-}05(\%)\right\}$ The smaller of these	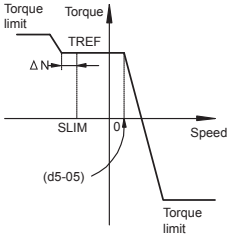 $\Delta N(\%)=\left\{\frac{TREF(\%)}{C5\text{-}01},\ d5\text{-}05(\%)\right\}$ The smaller of these

■Torque Reference Adjustment

Consider the following information when adjusting the torque.

Torque Reference Delay Time: d5-02

The time constant of the primary filter in the torque reference section can be adjusted. This parameter is used to eliminate noise in the torque reference signal and adjust the responsiveness to the host controller. Increase the setting if oscillation occurs during torque control.

Setting the Torque Compensation

Set multi-function analog input A2 or A3 to torque compensation (setting 14). When the amount of torque loss for mechanical loss or other factor at the load is input to one of these terminals, it is added to the torque reference to compensate for the loss. The direction of torque will be as follows:

- Positive voltage (current): Torque compensation reference for forward motor rotation (counterclockwise as viewed from the motor output axis).
- Negative voltage: Torque compensation reference for reverse motor rotation (clockwise as viewed from the motor output axis).

Since the polarity of the voltage input determines the direction, only forward torque compensation can be input when the 0 to 10V or 4 to 20mA signal level has been selected. If you want to input reverse torque compensation, be sure to select the 0 to ±10V signal level.

■Speed/Torque Control Switching Function

It is possible to switch between speed control and torque control when one of the multi-function inputs (H1-01 to H1-10) is set to 71 (Speed/Torque Control Change). Speed control is performed when the input is OFF and torque control is performed when the input is ON. Set d5-01 to switch speed/torque control.

■Setting the Speed/Torque Control Switching Timer

The delay between a change in the speed/control switching function input (ON to OFF or OFF to ON) and the corresponding change in the control mode can be set in d5-06. During the timer delay, the value of the 3 analog inputs will retain the values they had when the ON/OFF status of speed/torque control switching signal was changed. Use this delay to complete any changes required in external signals.

Application Precautions

- The frequency reference (during speed control) is set in b1-01. The speed limit during torque control is set in d5-03.
- If the torque reference has been assigned to a multi-function analog input, terminal A2, or terminal A3, the input function changes when the control mode is switched between torque control and speed control.
  During speed control: The analog input terminal is used as the torque limit input.
  During torque control: The analog input terminal is used as the torque reference input.
- When the run command turns OFF, the control method when stopped will be for speed control. Even from the torque control mode, the system will automatically change to speed control and decelerate to a stop when the run command turns OFF.
- When A1-02 (control method selection) is set to 3 (flux vector control), the speed/torque change command (a setting of 71) can be set for a multi-function input (H1-01 to H1-10) to switch between speed and torque control during operation. An example is shown below.

Terminal No.	User Parameter No.	Factory Setting	Setting	Function
8	H1-06	8	71	Speed/torque control change
A1	b1-01	1	1	Frequency reference selection (terminals A1, A2)
	C5-03	1	1	Speed limit (terminals A1, A2)
A3	H3-05	0	13	Torque reference/torque limit

A timing chart for switching between speed and torque control is shown in the following figure.

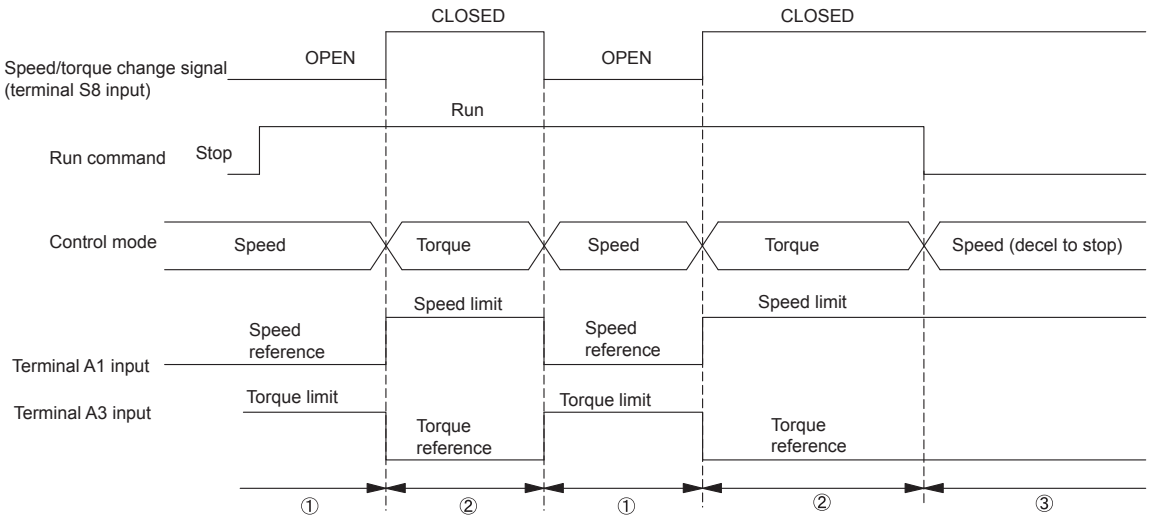

Fig 6.66 Speed/Torque Control Switching Time Chart.

◆ Speed Control (ASR) Structure

Speed control (ASR) during vector control adjusts the torque reference so that the deviation between the speed reference and the estimated speed (PG feedback or speed estimator) is 0. Speed control (ASR) during V/f control with a PG adjusts the output frequency so that the deviation between the speed reference and the estimated speed (PG feedback or speed estimator) is 0. The following block diagram shows the structure of the speed control for vector or V/f control with a PG.

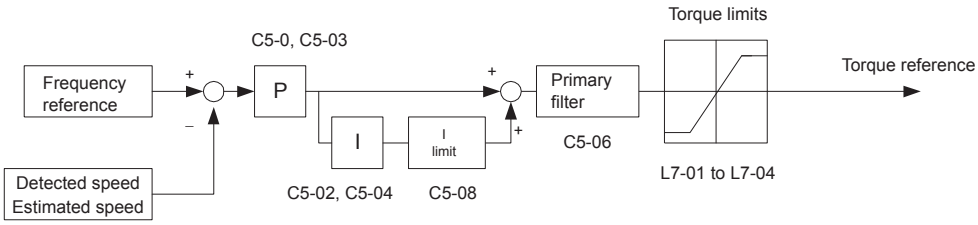

Speed Control Block Diagram for Vector Control

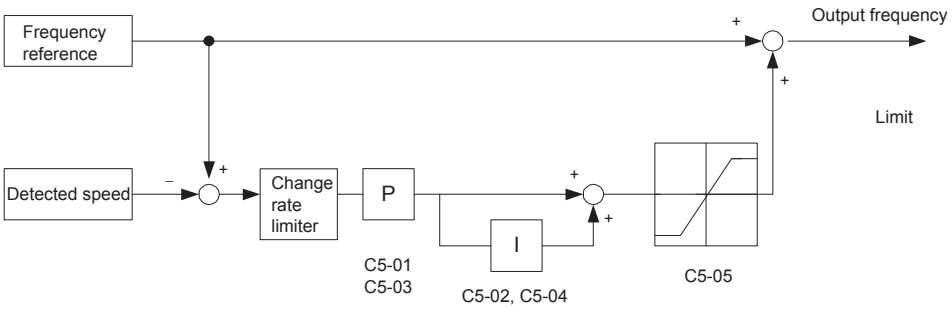

Speed Control Block Diagram for V/f Control with a PG

Fig 6.67 Speed Control Block Diagrams

■Related Parameters

Parameter Number	Name: Display	Description	Setting Range	Factory Setting	Change during Operation	Control Methods: V/f	V/f with PG	Open Loop Vector 1	Flux Vector	Open Loop Vector 2
C5-01	ASR Proportional Gain 1 ASR P Gain 1	Sets the proportional gain of the speed control loop (ASR)	0.00 to 300.00 *2	20.00 *1	Yes	No	A	No	A	A
C5-02	ASR Integral Time 1 ASR I Time 1	Sets the integral time of the speed control loop (ASR)	0.000 to 10.000	0.500 sec *1	Yes	No	A	No	A	A
C5-03	ASR Proportional Gain 2 ASR P Gain 2	Sets the speed control gain 2 and integral time 2 of the speed control loop (ASR). Note: Adjustment is not normally required.	0.00 to 300.00 *2	20.00 *1	Yes	No	A	No	A	A
C5-04	ASR Integral Time 2 ASR I Time 2		0.000 to 10.000	0.500 sec *1	Yes	No	A	No	A	A
C5-05	ASR Limit ASR Limit	Sets the upper limit for the speed control loop (ASR) as a percentage of the maximum output frequency (E1-04).	0.0 to 20.0	5.0%	No	No	A	No	No	No
C5-06	ASR Primary Delay Time Constant ASR Delay Time	Sets the filter time constant for the time from the speed loop to the torque command output.	0.000 to 0.500	0.004 *1	No	No	No	No	A	A
C5-07	ASR Gain Switching Frequency ASR Gain SW Freq	Sets the frequency for switching between Proportional Gain 1, 2 and Integral Time 1, 2.	0.0 to 400.0	0.0	No	No	No	No	A	A
C5-08	ASR Integral Limit ASR I Limit	Sets the ASR integral upper limit and rated load as a percentage of maximum output frequency (E1-04).	0 to 400	400	No	No	No	No	A	A

* 1. Factory settings will change depending on the control mode.
* 2. The setting range becomes 1.00 to 300.0 when using controls modes Flux Vector or Open Loop Vector 2.

Multi-function Contact Input Functions (H1-01 to H1-10)

Setting Value	Function	Control Methods				
		V/f	V/f with PG	Open Loop Vector 1	Flux Vector	Open Loop Vector 2
D	Speed control disable setting for V/f control with PG OFF: Use speed control V/f control with PG ON: Do not use speed control for V/f control with PG	No	Yes	No	No	No
E	Speed control integral reset Enables switching between PI and P control for the speed control loop.	No	No	No	Yes	Yes
77	Speed control (ASR) proportional gain switch (switching between C5-01 and C5-03) OFF: Use proportional gain in C5-01 ON: Use proportional gain in C5-03	No	No	No	Yes	Yes

■Speed Control (ASR) Gain Adjustment for Vector Control

Use the following procedure to adjust C5-01 and C5-03 with the mechanical system and actual load connected.

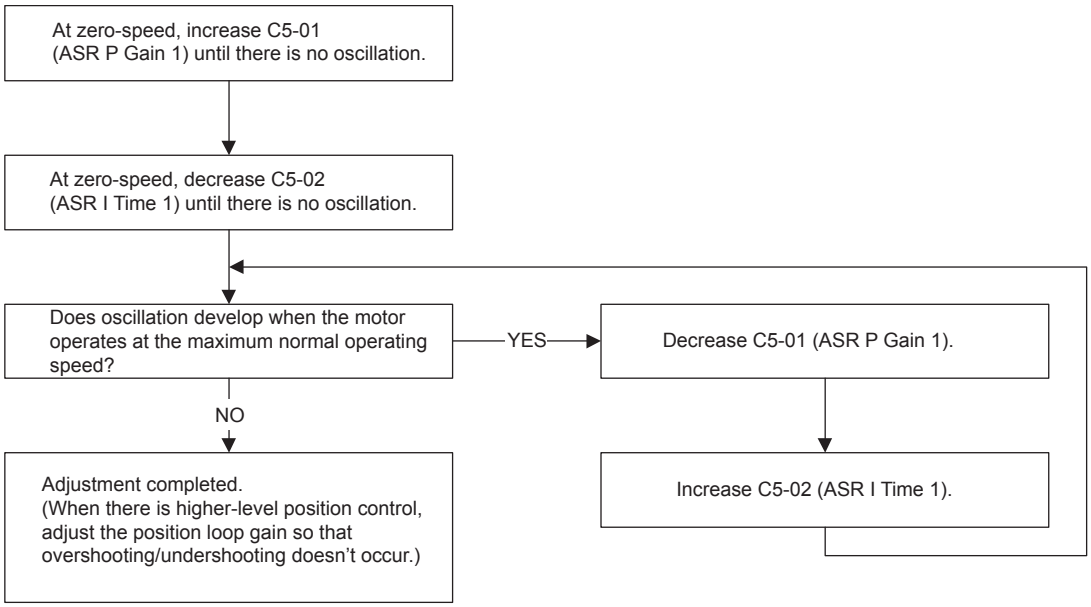

Fine Adjustments

When you want even finer gain adjustment, adjust the gain while observing the speed waveform. Parameter settings like those shown in the following table will be necessary to monitor the speed waveform.

Parameter No.	Name	Setting	Explanation
H4-01	Multi-function analog output 1 terminal FM monitor selection	2	Settings that allow multi-function analog output 1 to be used to monitor the output frequency.
H4-02	Multi-function analog output 1 terminal FM output gain	1.00	
H4-03	Multi-function analog output 1 terminal FM bias	0.0	
H4-04	Multi-function analog output 2 terminal AM monitor selection	5	Settings that allow multi-function analog output 2 to be used to monitor the motor speed.
H4-05	Multi-function analog output 2 terminal AM output gain	1.00	
H4-06	Multi-function analog output 2 terminal AM bias selection	0.00	
H4-07	Multi-function analog output 1 terminal signal level selection	1	Settings that allow a 0 to ±10V signal range to be monitored.
H4-08	Multi-function analog output 2 terminal signal level selection	1	

The multi-function analog outputs have the following functions with these parameter settings.

- Multi-function analog output 1 (terminal FM): Outputs Drive's output frequency (0 to ±10 V).
- Multi-function analog output 2 (terminal AM): Outputs actual motor speed (0 to ±10 V).

Terminal AC is the multi-function analog output common.
We recommend monitoring both the output frequency and the motor speed to monitor the response delay or deviations from the reference value, as shown in the following diagram.

Adjusting ASR Proportional Gain 1 (C5-01)

This gain setting adjusts the responsiveness of the speed control (ASR). The responsiveness is increased when this setting is increased. Usually this setting is higher for larger loads. Oscillation will occur if this setting is increased too much.
The following diagram shows the type of changes that can occur in the response when the ASR proportional gain is changed.

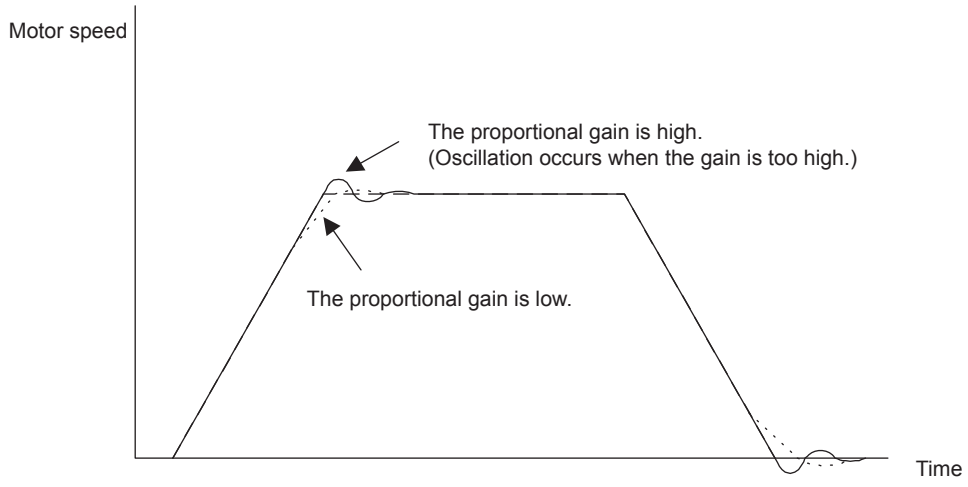

Fig 6.68 Responsiveness for Proportional Gain

Adjusting ASR Integral Time 1 (C5-02)

This parameter sets the speed control (ASR) integral time.
Lengthening the integral time lowers the responsiveness, and weakens the resistance to external influences. Oscillation will occur if this setting is too short. The following diagram shows the type of changes that can occur in the response when the ASR integral time is changed.

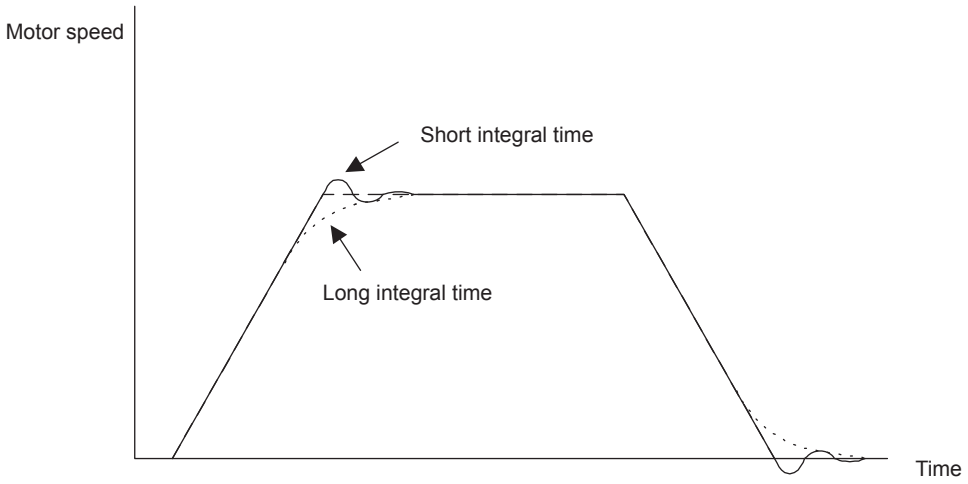

Fig 6.69 Responsiveness for Integral Time

Different Gain Settings for Low-speed and High-speed

Switch between low-speed and high-speed gain when oscillation occurs because of resonance with the mechanical system at low speed or high speed. The proportional gain P and integral time I can be switched according to the motor speed, as shown below.

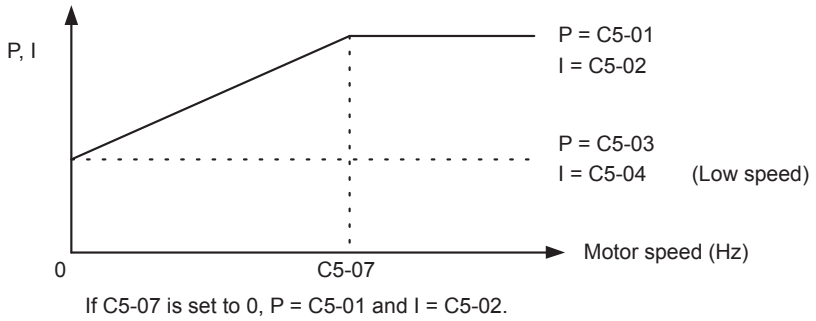

Fig 6.70 Low-speed and High-speed Gain Settings

Setting the Gain Switching Frequency (C5-07)

Set the switching frequency to about 80% of the motor operating frequency or the frequency at which oscillation occurs.

Low-speed Gain Adjustments (C5-03, C5-04)

Connect the actual load and adjust these parameters at zero-speed. Increase C5-03 (ASR proportional gain 2) until there is no oscillation. Decrease C5-04 (ASR integral time 2) until there is no oscillation.

High-speed Gain Adjustments (C5-01, C5-02)

Adjust these parameters at normal operating speed. Increase C5-01 (ASR proportional gain 1) until there is no oscillation. Decrease C5-02 (ASR integral time 1) until there is no oscillation. Refer to *Fine Adjustments* on page 6 - 131 for details on making fine adjustments of high-speed operation.

ASR Proportional Gain Switch Setting

When one of the multi-function inputs (H1-01 to H1-10) is set to 77, the input can be used to switch between C5-01 (proportional gain 1) and C5-03 (proportional gain 2). Proportional gain 2 is used when the multi-function input is ON. This input has higher priority than the ASR switching frequency set in C5-07.

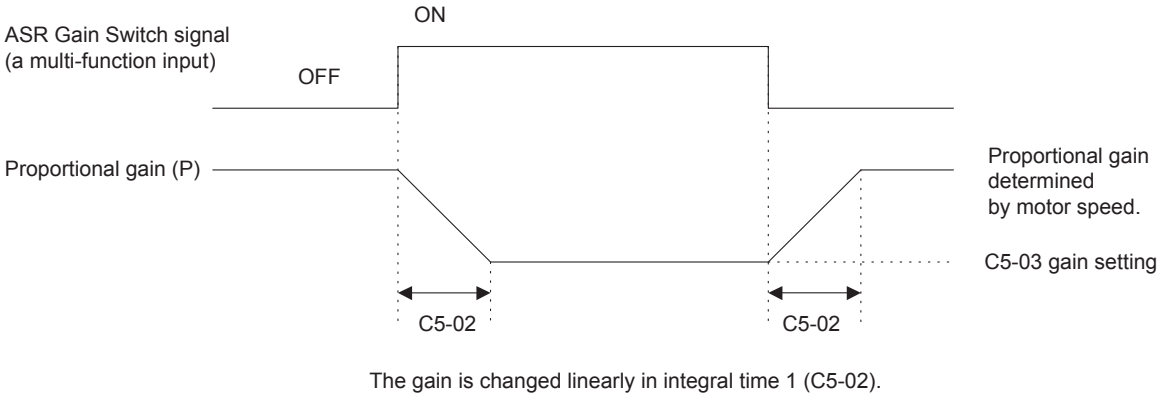

Fig 6.71 ASR Proportional Gain Switch

■Gain Adjustment for Speed Control during V/f Control with PG

When using V/f control with PG, set the proportional gain (P) and the integral time (I) at E1-09 (minimum output frequency) and E1-04 (maximum output frequency). *Fig 6.72 Speed Control Gain Integral Time Adjustment for V/f Control with PG* shows how the proportional gain and integral time change in linear fashion based on the speed.

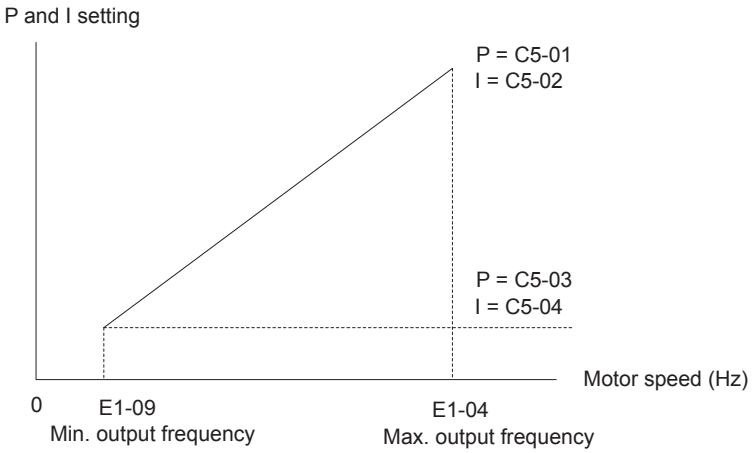

Fig 6.72 Speed Control Gain Integral Time Adjustment for V/f Control with PG

Gain Adjustments at Minimum Output Frequency

Operate the motor at the minimum output frequency. Increase C5-03 (ASR proportional gain 2) to a level where there is no oscillation. Decrease C5-04 (ASR integral time 2) to a level where there is no oscillation. Monitor the Drive's output current and verify that it is less than 50% of the Drive rated current. If the output current exceeds 50% of the Drive's rated current, decrease C5-03 and increase C5-04.

Gain Adjustments at Maximum Output Frequency

Operate the motor at the maximum output frequency. Increase C5-01 (ASR proportional gain 1) to a level where there is no oscillation. Decrease C5-02 (ASR integral time 1) to a level where there is no oscillation.

Fine Adjustments

When you want even finer gain adjustment, adjust the gain while observing the speed waveform. The adjustment method is the same as that for vector control.
Enable integral operation during acceleration and deceleration (by setting F1-07 to 1) when you want the motor speed to closely follow the frequency reference during acceleration and deceleration. Reduce the setting of C5-01 if overshooting occurs during acceleration, and reduce the setting of C5-03 and increase the setting of C5-04 if undershooting occurs when stopping. If overshooting and undershooting cannot be eliminated by adjusting only the gain, reduce the value of C5-05 speed control and reduce the limit of the frequency reference compensation value.

◆ Droop Control Function

Droop control is a function that allows the user to set the amount of motor slip.
When a single load is operated with two motors (such as in a crane conveyor), a high-resistance motor is normally used. This is to use torque characteristics that exhibit proportion movements due to changes in the secondary resistor to maintain torque balance with the load and overall speed balance with the load.
If droop control is used, a high-resistance motor characteristics can be set for a general-purpose motor.

■Related Parameters

Parameter Number	Name	Description	Setting Range	Factory Setting	Change during Operation	Control Methods				
	Display					V/f	V/f with PG	Open Loop Vector 1	Flux Vector	Open Loop Vector 2
b7-01	Droop Control Level Droop Quantity	Sets the speed decrease as a percentage of motor base speed (E1-06) when the motor is at 100% load torque. Setting of 0.0 disables droop control.	0.0 to 100.0	0.0	Yes	No	No	No	A	A
b7-02	Droop Control Delay Time Droop Delay Time	Determines the droop control delay time in response to a load change.	0.03 to 2.00	0.05sec	No	A	A	A	A	A

■Setting Precautions

- Droop control is disabled if b7-01 is set to 0.0.
- Set b7-01 to the amount of slip as the percentage of slip when the maximum output frequency is input and the rated torque is generated.
- Parameter b7-02 is used to adjust the responsiveness of droop control. Increase this setting if oscillation or hunting occur.

■Setting the Droop Control Gain

Set the droop control gain as the speed reduction at a 100% motor torque, as a percentage of the maximum output frequency.

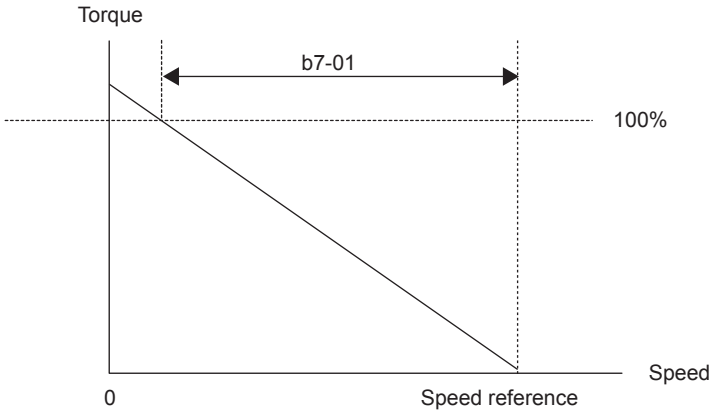

Fig 6.73 Droop Control Gain

◆ Zero-servo Function

The zero-servo function holds the motor when the motor is stopped in what is call a zero-servo status. This function can be used to stop the motor even with an external force acts on the motor or the analog reference input is offset.

The zero-servo function is enabled when one of the multi-function inputs (H1-01 to H1-10) is set to 72 (zero servo command). If the zero servo command is ON when the frequency (speed) reference falls below the zero speed level, a zero-servo status is implemented.

■Related Parameters

Parameter Number	Name Display	Description	Setting Range	Factory Setting	Change during Operation	Control Methods V/f	V/f with PG	Open Loop Vector 1	Flux Vector	Open Loop Vector 2
b2-01	DC Injection Braking Start Frequency DCInj Start Freq	Sets the frequency at which DC injection braking starts when ramp to stop (b1-03 = 0) is selected. If b2-01< E1-09, DC Injection braking starts at E1-09. Note: Zero Speed restrictions are active in Flux Vector Mode.	0.0 to 10.0	0.5Hz	No	A	A	A	A	A
b9-01	Zero Servo Gain Zero Servo Gain	Sets the position loop gain for Zero Servo command. This function is effective when multi-function input "zero servo command" is set.	0 to 100	5	No	No	No	No	A	No
b9-02	Zero Servo Completion Width Zero Servo Count	Sets number of pulses used for the multi-function output of "zero servo completion".	0 to 16383	10	No	No	No	No	A	No

Multi-function Contact Input Functions (H1-01 to H1-10)

Setting Value	Function	Control Methods				
		V/f	V/f with PG	Open Loop Vector 1	Flux Vector	Open Loop Vector 2
72	Zero-servo command (ON: Zero-servo)	No	No	No	Yes	No

Multi-function Contact Output Functions (H2-01 to H2-03)

Setting Value	Function	Control Methods				
		V/f	V/f with PG	Open Loop Vector 1	Flux Vector	Open Loop Vector 2
33	Zero-servo end ON: Current position is within zero-servo start position ± the zero-servo end width.	No	No	No	Yes	No

To output the zero-servo status externally, assign the Zero Servo End signal (setting 33) to one of the multi-function outputs (H2-01 to H2-03).

Monitor Function

Parameter Number	Name	Description	Output Signal Level During Multi-Function Analog Output	Min. Unit	Control Methods				
	Display				V/f	V/f with PG	Open Loop Vector 1	Flux Vector	Open Loop Vector 2
U1-35	Zero-servo movement pulses Zero Servo Pulse	Shows the number of PG pulses times 4 for the movement range when stopped at zero.	(Cannot be output.)	1	No	No	No	A	No

■Time Chart

A time chart for the zero servo function is given in *Fig 6.74 Time Chart for Zero Servo*.

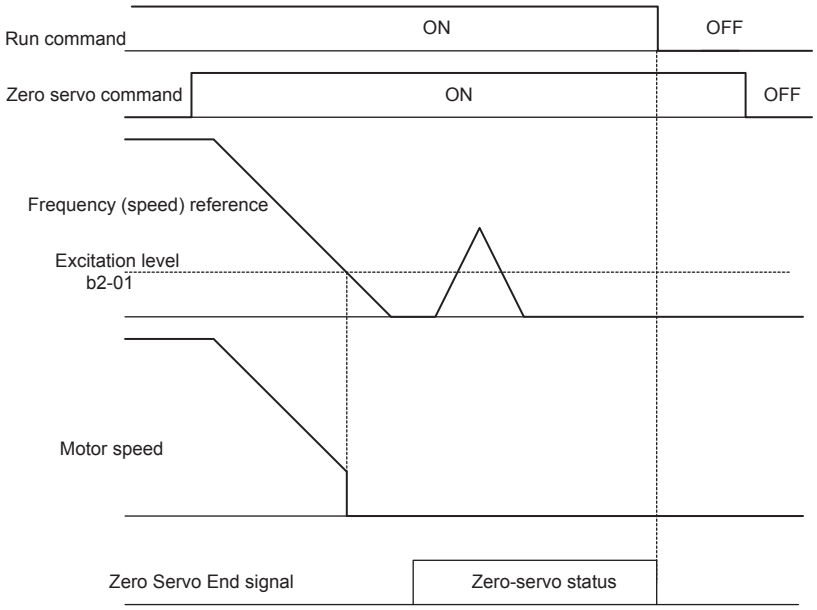

Fig 6.74 Time Chart for Zero Servo

■Application Precautions

- Be sure to leave the run command input ON. If the run command is turned OFF, the output will be interrupted and the zero-servo function will become ineffective.
- The holding force of the zero-servo is adjusted in b9-01. The holding force will increase if the value of the setting is increased, but oscillation and hunting will occur if the setting is too large. Adjust b9-01 after adjusting the speed control gain.
- The zero-servo detection width is set as the allowable position offset from the zero-servo start position. Set 4 times the number of pulses from the PG.
- The Zero Servo End signal will go OFF when the zero servo command is turned OFF.

IMPORTANT

Do not lock the servo for extended periods of time at 100% when using the zero servo function. Drive errors may result. Extended periods of servo lock can be achieved by ensuring that the current during the servolock is 50% or less or by increasing the Drive capacity.

Digital Operator Functions

This section explains the Digital Operator functions.

◆ Setting Digital Operator Functions

You can set Digital Operator-related parameters such as selecting the Digital Operator display, multi-function selections, and copy functions.

■Related Parameters

Parameter Number	Name: Display	Description	Setting Range	Factory Setting	Change during Operation	Control Methods: V/f	V/f with PG	Open Loop Vector 1	Flux Vector	Open Loop Vector 2
o1-02	User Monitor Selection After Power-Up Power-On Monitor	Selects which monitor will be displayed upon power-up. 1: Frequency Reference (U1-01) 2: Output Frequency (U1-02) 3: Output Current (U1-03) 4: User Monitor (set by o1-01)	1 to 4	1	Yes	A	A	A	A	A
o1-03	Digital Operator Display Selection Display Scaling	Sets the units of the Frequency References (d1-01 to d1-17), the Frequency Reference Monitors (U1-01, U1-02, U1-05), and the Modbus communication frequency reference. 0: Hz 1: % (100% = E1-04) 2 to 39: RPM (Enter the number of motor poles). 40 to 39999: User display. Set the number desired at maximum output frequency. 4 digit number Number of digits from the right of the decimal point. Example 1: o1-03 = 12000, will result in frequency reference from 0.0 to 200.0 (200.0 = Fmax). Example 2: o1-03 = 21234, will result in frequency reference from 0.00 to 12.34 (12.34 = Fmax).	0 to 39999	0	No	A	A	A	A	A
o1-04	Setting unit for frequency parameters related to V/F characteristics Display Units	Sets the setting units related to V/F pattern frequency related parameters (E1-04, -06, -09, -11) 0: Hertz 1: RPM	0 to 1	0	No	No	No	No	A	A

Parameter Number	Name	Description	Setting Range	Factory Setting	Change during Operation	Control Methods				
	Display					V/f	V/f with PG	Open Loop Vector 1	Flux Vector	Open Loop Vector 2
o2-01	Local/Remote Key Function Selection Local/Remote Key	Determines if the Digital Operator Local/Remote key is functional. 0: Disabled 1: Enabled	0 to 1	1	No	A	A	A	A	A
o2-02	STOP Key Function Selection Oper STOP Key	Determines if the STOP key on the Digital Operator will stop the Drive when Drive is operating from external terminals or serial communication. 0: Disabled 1: Enabled	0 to 1	1	No	A	A	A	A	A
o2-03	User Parameter Default Value User Defaults	Allows storing of parameter settings as a User Initialization Selection. 0: No Change 1: Set Defaults - Saves current parameter settings as user initialization. A1-03 now allows selecting <1110> for user initialization and returns o2-03 to zero. 2: Clear All - Clears the currently saved user initialization. A1-03 no longer allows selecting <1110> and returns o2-03 to zero.	0 to 2	0	No	A	A	A	A	A
o2-05	Frequency Reference Setting Method Selection Operator M.O.P.	Determines if the Data/Enter key must be used to input a frequency reference from the Digital Operator. 0: Disabled - Data/Enter key must be pressed to enter a frequency reference. 1: Enabled - Data/Enter key is not required. The frequency reference is adjusted by the up and down arrow keys on the Digital Operator without having to press the data/enter key.	0 to 1	0	No	A	A	A	A	A
o2-07	Cumulative Operation Time Setting Elapsed Time Set	Sets the initial value of the elapsed operation timer U1-13.	0 to 65535	0 hr	No	A	A	A	A	A
o2-10	Cumulative Cooling Fan Operation Time Setting Fan ON Time Set	Sets the initial value of the heatsink fan operation time monitor U1-40.	0 to 65535	0 hr	No	A	A	A	A	A

■Changing Frequency Reference and Display Units

Set the Digital Operator frequency reference and display units using parameter o1-03. You can change the units for the following parameters using o1-03.

- U1-01 (Frequency Reference)
- U1-02 (Output Frequency)
- U1-05 (Motor Speed)
- U1-20 (Output Frequency after Soft Start)
- d1-01 to d1-17 (Frequency references)

■Switching Monitors when the Power Supply Is ON

Using parameter o1-02, select the monitor item (U1-□□ [status monitor]) to be displayed on the Digital Operator when the power supply is turned ON. For monitors that can be displayed, refer to U1-□□ in *Chapter 5 User Parameters*.

Setting Precautions

If selecting monitor parameters other than U1-01 (Frequency Reference), U1-02 (Output Frequency), and U1-03 (Output Current), first select the monitor items to be displayed in o1-01, and then set o1-02 to 4.

■Disabling the STOP Key

If b1-02 (Operation Method Selection) is set to 1, 2, or 3, the stop command from the STOP Key on the Digital Operator is an emergency stop command.

Set o2-02 to 0 to disable emergency stop commands from the STOP Key on the Digital Operator.

■Disabling the LOCAL/REMOTE Key

Set o2-01 to 0 to disable the LOCAL/REMOTE Key on the Digital Operator. You cannot switch Drive reference inputs set using reference inputs from the Digital Operator, b1-01 (Reference Selection), or b1-02 (Operation Method Selection).

■Initializing Changed Parameter Values

You can save to the Drive parameter set values that you have changed as parameter initial values. Change the set values from the Drive factory settings, and then set o2-03 to 1.

Set A1-03 (Initialize) to 1110 to initialize the Drive parameters using the user-set initial values in memory. To clear the user-set initial values in memory, set o2-03 to 2.

■Setting the Frequency Reference using the UP and DOWN Keys without Using the Enter Key

Use this function when inputting frequency references from the Digital Operator. When o2-05 is set to 1, you can increment and decrement the frequency reference using the UP and DOWN Keys without using the Enter Key.

For example, enter the Run command using a 0 Hz reference, and then continuously press the UP Key to increment the frequency reference by 0.01Hz only for the first 0.5 s, and then by 0.01Hz every 80ms for 3 s thereafter. Press and hold down the UP Key for 3 s minimum to reach the maximum output frequency 10 s after that. The frequency reference that has been set will be stored in memory 5 s after the UP or DOWN Keys are released.

■Clearing Cumulative Operation Time

Set the cumulative operation time initial value in time units in parameter o2-07. Set o2-07 to 0 to clear U1-13 (drive Operating Time).

■Clearing Drive Cooling Fan Operation Time

Set the fan operation time initial value in time units in parameter o2-10. Set o2-10 to 0 to clear U1-40 (Cooling Fan Operating Time).

◆ Copying Parameters

The Digital Operator can perform the following three functions using the built-in EEPROM (non-volatile memory).

- Store Drive parameter set values in the Digital Operator (READ)
- Write parameter set values stored in the Digital Operator to the Drive (COPY)
- Compare parameter set values stored in the Digital Operator with Drive parameters (VERIFY)

■Related Parameters

Parameter Number	Name: Display	Description	Setting Range	Factory Setting	Change during Operation	Control Methods: V/f	V/f with PG	Open Loop Vector 1	Flux Vector	Open Loop Vector 2
o3-01	Copy Function Selection Copy Function Sel	This parameter controls the copying of parameters to and from the Digital Operator. 0: COPY SELECT (no function) 1: INV --> OP READ - All parameters are copied from the Drive to the Digital Operator. 2: OP --> INV WRITE - All parameters are copied from the Digital Operator to the Drive. 3: OP<-->INV VERIFY - Parameter settings in the Drive are compared to those in the Digital Operator. Note: When using the copy function, the Drive model number (o2-04), software number (U1-14), and control method (A1-02) must match or an error will occur.	0 to 3	0	No	A	A	A	A	A
o3-02	Copy Allowed Selection Read Allowable	Enables and disables the Digital Operator copy functions. 0: Disabled - No Digital Operator copy functions are allowed. 1: Enabled - Copying allowed.	0 to 1	0	No	A	A	A	A	A

■Storing Drive Set Values in the Digital Operator (READ)

To store Drive set values in the Digital Operator, make the settings using the following method.

Table 6.1 READ Function Procedure

Step No.	Digital Operator Display	Explanation
1	-ADV- ** Main Menu ** Programming	Press the Menu Key, and select advanced programming mode.
2	-ADV- Initialization A1 - 00=1 Select Language	Press the DATA/ENTER Key, and select the parameter monitor display.
3	-ADV- COPY Function o3 - 01=0 Copy Funtion Sel	Display o3-01 (Copy Function Selection) using the Increment Key and Decrement Key.
4	-ADV- Copy Funtion Sel o3-01=0 *0* COPY SELECT	Press the DATA/ENTER Key, and select the parameter setting display.
5	-ADV- Copy Funtion Sel o3-01=1 *0* INV→OP READ	Change the set value to 1 using the Increment Key.
6	-ADV- READ INV→OP READING	Set the changed data using the DATA/ENTER Key. The READ function will start.
7	-ADV- READ READ COMPLETE	If the READ function ends normally, End is displayed on the Digital Operator.
8	-ADV- Copy Funtion Sel o3 - 01=0 *0* COPY SELECT	The display returns to o3-01 when a key is pressed.

An error may occur while saving to memory. If an error is displayed, press any key to cancel the error display and return to the o3-01 display.

Error displays and their meanings are shown below. (Refer to *Chapter 7 Errors when Using the Digital Operator Copy Function*.)

Error Display	Meaning
PRE READ IMPOSSIBLE	You are attempting to set o3-01 to 1 while o3-02 is set to 0.
IFE READ DATA ERROR	Read data length mismatch or read data error.
RDE DATA ERROR	Tried to write parameters to EEPROM on the Digital Operator, but unable to perform write operation.

Select READ Permitted

Prevent overwriting the data stored in EEPROM in the Digital Operator by mistake. With o3-02 set to 0, if you set o3-01 to 1, and perform the write operation, PrE will be displayed on the Digital Operator, and the write operation will be stopped.

■Writing Parameter Set Values Stored in the Digital Operator to the Drive (COPY)

To write parameter set values stored in the Digital Operator to the Drive, make the settings using the following method.

Table 6.2 COPY Function Procedure

Step No.	Digital Operator Display	Explanation
1	-ADV- ** Main Menu ** Programming	Press the MENU Key, and select advanced programming mode.
2	-ADV- Initialization A1 - 00=1 Select Language	Press the DATA/ENTER Key, and select the parameter monitor display.
3	-ADV- COPY Function o3 - 01=0 Copy Funtion Sel	Display o3-01 (Copy Function Selection) using the Increment Key and Decrement Key.
4	-ADV- Copy Funtion Sel o3-01= 0 *0* COPY SELECT	Press the DATA/ENTER Key, and select the parameter setting display.

Table 6.2 COPY Function Procedure

Step No.	Digital Operator Display	Explanation
5	-ADV- Copy Funtion Sel o3-01= 2 *0* OP→INV WRITE	Change the set value to 2 using the Increment Key.
6	-ADV- COPY OP→INV COPYING	Set the changed data using the DATA/ENTER Key. The COPY function will start.
7	-ADV- COPY COPY COMPLETE	If the COPY function ends normally, End is displayed on the Digital Operator.
8	-ADV- Copy Funtion Sel o3 - 01=0 *0* COPY SELECT	The display returns to o3-01 when a key is pressed.

During the copy operation, errors may occur. If an error is displayed, press any key to cancel the error display and return to the 03-01 display.

Error displays and their meanings are shown below. (Refer to *Chapter 7 Errors when Using Digital Operator Copy Function.)*

Error Display	Meaning
CPE ID UNMATCH	Drive product code and Drive software number are different.
VAE INV. KVA UNMATC	Drive capacity with which you are trying to copy, and the Drive capacity stored in the Digital Operator are different.
CRE CONTROL UNMATCH	The Drive control method in which you are trying to copy, and the Drive control method stored in the Digital Operator are different.
CYE COPY ERROR	Comparison between the parameter written to the Drive and the parameter in the Digital Operator shows they are different.
CSE SUM CHECK ERROR	After copying has ended, comparison between the sum value of the Drive parameter area and the sum value of the Digital Operator parameter area shows they are different.

■Comparing Drive Parameters and Digital Operator Parameter Set Values (VERIFY)

To compare Drive parameters and Digital Operator parameter set values, make the settings using the following method.

Table 6.3 VERIFY Function Procedure

Step No.	Digital Operator Display	Explanation
1	-ADV- ** Main Menu ** Programming	Press the MENU Key. and select advanced programming mode.
2	-ADV- Initialization A1 - 00=1 Select Language	Press the DATA/ENTER Key, and select the parameter monitor display.
3	-ADV- COPY Function o3 - 01=0 Copy Funtion Sel	Display o3-01 (Copy Function Selection) using the Increment Key and Decrement Key.
4	-ADV- Copy Funtion Sel o3-01= 0 *0* COPY SELECT	Press the DATA/ENTER Key, and select the function setting display.
5	-ADV- Copy Funtion Sel o3-01= 3 *0* OP←→INV VERIFY	Change the set value to 3 using the Increment Key.
6	-ADV- VERIFY DATA VERIFYING	Set the changed data using the DATA/ENTER Key. The VERIFY function will start.
7	-ADV- VERIFY VERIFY COMPLETE	If the VERIFY function ends normally, End is displayed on the Digital Operator.
8	-ADV- Copy Funtion Sel o3 - 01=0 *0* COPY SELECT	The display returns to o3-01 when a key is pressed.

An error may occur during the comparison. If an error is displayed, press any key to cancel the error display and return to the o3-01 display. Error displays and their meanings are shown below. (Refer to *Chapter 7 Errors when Using Digital Operator Copy Function.)*

Error Display	Meaning
VYE VERIFY ERROR	Verify error (Settings in the Digital Operator and the Drive do not match).

■Application Precautions

When using the copy function, check that the following settings are the same between the Drive and the Digital Operator.

- Drive product and type
- Software number
- Drive capacity and voltage
- Control method

◆ Prohibiting Writing Parameters from the Digital Operator

If you set A1-01 to 0, you can refer to and set the A1 and A2 parameter groups, and refer to drive mode, using the Digital Operator.

If you set one of the parameters H1-01 to H1-05 (multi-function contact input terminal S3 to S7 function selection) to 1B (write parameters permitted), you can write parameters from the digital operator when the terminal that has been set is ON. When the set terminal is OFF, writing parameters other than the frequency reference is prohibited. You can, however, reference parameters.

Parameter Number	Name	Description	Setting Range	Factory Setting	Change during Operation	Control Methods				
	Display					V/f	V/f with PG	Open Loop Vector 1	Flux Vector	Open Loop Vector 2
A1-01	Access Level Selection Access Level	Selects which parameters are accessible via the Digital Operator. 0: Operation Only 1: User Level (only available if A2 parameters have been set) 2: Advanced Level	0 to 2	2	Yes	A	A	A	A	A

◆ Setting a Password

When a password is set in A1-05, if the set values in A1-04 and A1-05 do not match, you cannot refer to or change the settings of parameters A1-01 to A1-03, or A2-01 to A2-32.

You can prohibit the setting and referencing of all parameters except A1-00 by using the password function in combination with setting A1-01 to 0 (Monitor only).

■Related Parameters

Parameter Number	Name: Display	Description	Setting Range	Factory Setting	Change during Operation	Control Methods: V/f	V/f with PG	Open Loop Vector 1	Flux Vector	Open Loop Vector 2
A1-01	Access Level Selection / Access Level	Selects which parameters are accessible via the Digital Operator. 0: Operation Only 1: User Level (only available if A2 parameters have been set) 2: Advanced Level	0 to 2	2	Yes	A	A	A	A	A
A1-04	Password 1 / Enter Password	When the value set into A1-04 does NOT match the value set into A1-05, parameters A1-01 thru A1-03 and A2-01 thru A2-32 cannot be changed. All other parameters as determined by A1-01 can be changed. Parameter A1-05 can be accessed by pressing the MENU key while holding the RESET key.	0 to 9999	0	No	A	A	A	A	A
A1-05	Password 2 / Select Password	When the value set into A1-04 does NOT match the value set into A1-05, parameters A1-01 thru A1-03 and A2-01 thru A2-32 cannot be changed. All other parameters as determined by A1-01 can be changed. Parameter A1-05 can be accessed by pressing the MENU key while holding the RESET key.	0 to 9999	0	No	A	A	A	A	A

■Setting Precautions

Parameter A1-05 cannot be displayed using normal key operations. To display A1-05, hold down the RESET Key and press the MENU Key while A1-04 is displayed.

◆ Displaying User-set Parameters Only

You can set and refer to parameters necessary to the Drive only, using the A2 parameters (user-set parameters) and A1-01 (Parameters Access Level).

Set the number of the parameter to which you want to refer in A2-01 to A2-32, and then set A1-01 to 1. You can set and refer to parameters set in A1-01 to A1-03 and A2-01 to A2-32 only, using advanced programming mode.

■Related Parameters

Parameter Number	Name	Description	Setting Range	Factory Setting	Change during Operation	Control Methods				
						V/f	V/f with PG	Open Loop Vector 1	Flux Vector	Open Loop Vector 2
A2-01 to A2-32	User setting parameters User Param 1 to 32	Used to set the parameter numbers that can be set/read. Maximum 32. Effective when the Parameter Access Level (A1-01) is set to User Program (1). Parameters set in parameters A2-01 to A2-32 can be set/read in programming mode.	b1-01 to o3-02	-	No	A	A	A	A	A

Options

This section explains the Drive option functions.

◆ Performing Speed Control with PG

This section explains functions with V/f control with PG.

■Related Parameters

Parameter Number	Name: Display	Description	Setting Range	Factory Setting	Change during Operation	Control Methods: V/f	V/f with PG	Open Loop Vector 1	Flux Vector	Open Loop Vector 2
F1-01	PG parameter PG Pulses/Rev	Sets the number of pulses per revolution (PPM) of the encoder (pulse generator).	0 to 60000	600	No	No	Q	No	Q	No
F1-02	Operation selection at PG open circuit (PGO) PG Fdbk Loss Sel	Sets stopping method when a PG open circuit fault (PGO) occurs. See parameter F1-14. 0: Ramp to stop - Decelerate to stop using the active deceleration time. 1: Coast to stop 2: Fast - Stop - Decelerate to stop using the deceleration time in C1-09. 3: Alarm Only - Drive continues operation.	0 to 3	1	No	No	A	No	A	No
F1-03	Operation selection at overspeed (OS) PG Overspeed Sel	Sets the stopping method when an overspeed (OS) fault occurs. See F1-08 and F1-09. 0: Ramp to stop - Decelerate to stop using the active deceleration time. 1: Coast to stop 2: Fast - Stop - Decelerate to stop using the deceleration time in C1-09. 3: Alarm Only - Drive continues operation.	0 to 3	1	No	No	A	No	A	A
F1-04	Operation Selection at Deviation PG Deviation Sel	Sets the stopping method when a speed deviation (DEV) fault occurs. 0: Ramp to stop (Deceleration stop using Deceleration Time 1, C1-02.) 1: Coast to stop 2: Fast stop (Emergency stop using the deceleration time in C1-09.) 3: Continue operation (DEV is displayed and operation continued.)	0 to 3	3	No	No	A	No	A	A

Parameter Number	Name: Display	Description	Setting Range	Factory Setting	Change during Operation	Control Methods: V/f	V/f with PG	Open Loop Vector 1	Flux Vector	Open Loop Vector 2
F1-05	PG Rotation Selection PG Rotation Sel	0: Fwd=C.C.W. - Phase A leads with forward run command. (Phase B leads with reverse run command.) 1: Fwd=C.W. - Phase B leads with forward run command. (Phase A leads with reverse run command.)	0 or 1	0	No	No	A	No	A	No
F1-06	PG Division Rate (PG Pulse Monitor) PG Output Ratio	Sets the division ratio for the pulse monitor of the PG-B2 encoder feedback option board. This function is not available with the PG-X2 option board. Division ratio = [(1 + n) / m] (n = 0 to 1, m =1 to 32) The first digit of the value of F1-06 stands for n, the second and the third stand for m. (from left to right). The possible division ratio settings are: 1/32 ≤ F1-06 ≤ 1	1 to 132	1	No	No	A	No	A	No
F1-07	Integral Function during Accel/Decel Selection PG Ramp PI/I Sel	Sets integral control during acceleration/deceleration to either enabled or disabled. 0: Disabled - The integral function is not used while accelerating or decelerating. 1: Enabled - The integral function is used at all times.	0 or 1	0	No	No	A	No	No	No
F1-08	Overspeed Detection Level PG Overspd Level	Configures the overspeed fault (OS) detection. OS fault will occur, if the motor speed feedback is greater than the F1-08 setting for a time longer than F1-09. F1-08 is set as a percentage of the maximum output frequency (E1-04). See F1-03.	0 to 120	115%	No	No	A	No	A	A
F1-09	Overspeed Detection Delay Time PG Overspd Time		0.0 to 2.0	0.0sec*	No	No	A	No	A	A
F1-10	Excessive Speed Deviation Detection Level PG Deviate Level	Configures the speed deviation fault (DEV) detection. DEV fault will occur if the speed deviation is greater than the F1-10 setting for a time longer than F1-11. F1-10 is set as a percentage of the maximum output frequency (E1-04). Speed deviation is the difference between actual motor speed and the frequency reference command. See F1-04.	0 to 50	10%	No	No	A	No	A	A
F1-11	Excessive Speed Deviation Detection Delay Time PG Deviate Time		0.0 to 10.0	0.5sec	No	No	A	No	A	A

Parameter Number	Name: Display	Description	Setting Range	Factory Setting	Change during Operation	Control Methods: V/f	V/f with PG	Open Loop Vector 1	Flux Vector	Open Loop Vector 2
F1-12	Number of PG Gear Teeth 1 PG # Gear Teeth1	Sets the gear ratio between the motor shaft and the encoder (PG). A gear ratio of 1 will be used if either of these parameters is set to 0. This function is not available in flux vector control.	0 to 1000	0	No	No	A	No	No	No
F1-13	Number of PG Gear Teeth 2 PG # Gear Teeth2			0	No	No	A	No	No	No
F1-14	PG Open-Circuit Detection Time PGO Detect Time	Configures the PG open (PGO) function. PGO will be detected if no PG pulses are detected for a time longer than F1-14. See F1-02.	0.0 to 10.0	2.0sec	No	No	A	No	A	No

* Factory setting will change according to the control mode (factory settings for Vector Control w/PG are shown here).

■Using PG Speed Control Card

There are four types of PG Speed Control Card that can be used in V/f control with PG.

- PG-A2: A-phase (single) pulse input, compatible with open collector or complimentary outputs.
- PG-B2: A/B-phase pulse input, compatible with complimentary outputs.
- PG-D2: A-phase (single) pulse input, compatible with line drivers.
- PG-X2: A/B/Z-phase pulse input, compatible with line drivers.

There are two types of PG Speed Control Cards that can be used for flux vector control.

- PG-B2: A/B phase pulse inputs, complementary outputs
- PG-X2: A/B/Z phase pulse inputs, line driver outputs

For the connection diagram, refer to *page 2*-36.

■Setting Number of PG Pulses

Set the number of PG (Pulse Generator/Encoder) pulses in pulses/rotation. Set the number of A-phase or B-phase pulses per 1 motor rotation in F1-01.

■Matching PG Rotation Direction and Motor Rotation Direction

Parameter F1-05 matches the PG rotation direction and the motor rotation direction. If the motor is rotating forwards, set whether it is A-phase driven or B-phase driven. Make this setting when using PG-B2 or PG-X2.

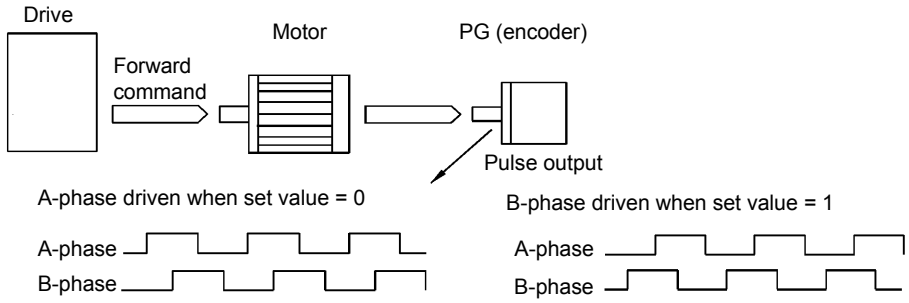

Example: Forward rotation of standard Yaskawa motor (PG used: Samtack (KK))

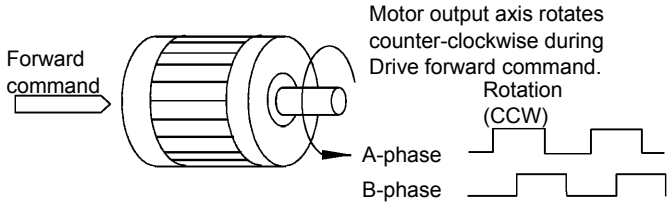

Yaskawa standard PG used is A-phase driven (CCW) when motor rotation is forward.

Fig 6.75 PG Rotation Direction Setting

Generally, PG is A-phase driven when rotation is clockwise (CW) see from the input axis. Also, motor rotation is counter-clockwise (CCW) seen from the output side when forward commands are output. Consequently, when motor rotation is forward, PG is normally A-phase driven when a load is applied, and B-phase driven when a load is not applied.

■Setting Number of Gear Teeth Between PG and Motor

Set the number of PG gear teeth in F1-12 and F1-13. If there are gears between the motor and PG, you can operate the motor by setting the number of gear teeth.

When the number of gear teeth has been set, the number of motor rotations within the Drive is calculated using the following formula.

No. of motor rotations (min^{-1}.) = No. of input pulses from PC × 60 / F1-01 × F1-13 (No. of gear teeth on load side) / F1-12 (No. of gear teeth on motor side)

■Matching Motor Speed During Acceleration and Deceleration to Frequency Reference

You can select whether to enable or disable integral operation during acceleration and deceleration when using flux vector control.

To match the motor speed as closely as possible to the frequency reference even during acceleration and deceleration, set F1-07 to 1.

IMPORTANT

If F1-01 is set to 1, overshoot or undershoot may occur easily immediately after acceleration and deceleration. To minimize the possibility of overshoot or undershoot occurring, set F1-01 to 0.

■Setting PG Pulse Monitor Output Dividing Ratio

This function is enabled only when using PG speed control card PG-B2. Set the dividing ratio for the PG pulse monitor output. The set value is expressed as n for the higher place digit, and m for the lower place 2 digits. The dividing ratio is calculated as follows:

Dividing ratio = (1 + n)/m (Setting range) n: 0 or 1, m: 1 to 32

F1-06 = □ □□
n m

The dividing ratio can be set within the following range: 1/32 ≤ F1-06 ≤ 1. For example, if the dividing ratio is 1/2 (set value 2), half of the number of pulses from the PG are monitor outputs.

■Detecting PG Open Circuit

Select the stopping method when PG cable disconnected is detected and the PG open circuit (PGO) detection time.

When the Drive is operating with the frequency reference set to 1% minimum (except when operating on direct current), if the speed feedback from PG is greater than the time setting in F1-14, PGO is detected.

■Detecting Motor Overspeed

An error is detected when the number of motor rotations exceeds the regulated limit. An overspeed (OS) is detected when a frequency that exceeds the set value in F1-08 continues for longer than the time set in F1-09. After detecting an overspeed (OS), the Drive stops according to the setting in F1-03.

■Detecting Speed Difference between the Motor and Speed Reference

An error is detected when the speed deviation (i.e., the difference between the designated speed and the actual motor speed) is too great. Speed deviation (DEV) is detected after a speed agreement is detected and when the speed reference and actual workpiece speed are within the setting of L4-02, if a speed deviation great than the set value in F1-10 continues for longer than the time set in F1-11. After a speed deviation is detected, the Drive stops according to the setting in F1-04.

◆ Using Digital Output Cards

There are two types of Drive digital output cards:

- DO-02C
  Relay contact output (DPDT contact)
- DO-08
  6 photocoupler output channels (shared commons)
  2 (independent) relay contact output channels (NC contact)

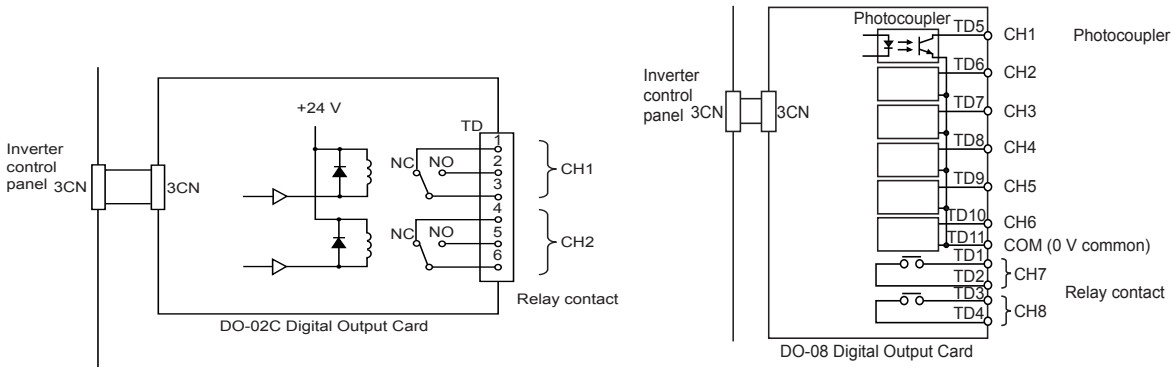

Fig 6.76 Digital Output Cards

■Related Parameters

Parameter Number	Name: Display	Description	Setting Range	Factory Setting	Change during Operation	Control Methods: V/f	V/f with PG	Open Loop Vector 1	Flux Vector	Open Loop Vector 2
F5-01	DO-02/DO-08 Channel 1 Output Selection DO Ch1 Select	Sets the digital output function number for channel 1. See the H2 parameter group for possible selections. Enabled when digital output card DO-02 or DO-08 is used.	0 to 37	0	No	A	A	A	A	A
F5-02	DO-02/DO-08 Channel 2 Output Selection DO Ch2 Select	Sets the digital output function number for channel 2. See the H2 parameter group for possible selections. Enabled when digital output card DO-02 or DO-08 is used.	0 to 37	1	No	A	A	A	A	A
F5-03	DO-08 Channel 3 Output Selection DO Ch3 Select	Sets the digital output function number for channel 3. See the H2 parameter group for possible selections. Enabled when digital output card DO-02 or DO-08 is used.	0 to 37	2	No	A	A	A	A	A
F5-04	DO-08 Channel 4 Output Selection DO Ch4 Select	Sets the digital output function number for channel 4. See the H2 parameter group for possible selections. Enabled when digital output card DO-02 or DO-08 is used.	0 to 37	4	No	A	A	A	A	A

Parameter Number	Name: Display	Description	Setting Range	Factory Setting	Change during Operation	Control Methods: V/f	V/f with PG	Open Loop Vector 1	Flux Vector	Open Loop Vector 2
F5-05	DO-08 Channel 5 Output Selection DO Ch5 Select	Sets the digital output function number for channel 5. See the H2 parameter group for possible selections. Enabled when digital output card DO-02 or DO-08 is used.	0 to 37	6	No	A	A	A	A	A
F5-06	DO-08 Channel 6 Output Selection DO Ch6 Select	Sets the digital output function number for channel 6. See the H2 parameter group for possible selections. Enabled when digital output card DO-02 or DO-08 is used.	0 to 37	37	No	A	A	A	A	A
F5-07	DO-08 Channel 7 Output Selection DO Ch7 Select	Sets the digital output function number for channel 7. See the H2 parameter group for possible selections. Enabled when digital output card DO-02 or DO-08 is used.	0 to 37	F	No	A	A	A	A	A
F5-08	DO-08 Channel 8 Output Selection DO Ch8 Select	Sets the digital output function number for channel 8. See the H2 parameter group for possible selections. Enabled when digital output card DO-02 or DO-08 is used.	0 to 37	F	No	A	A	A	A	A
F5-09	DO-08 Output Mode Selection DO-08 Selection	Sets the function of the DO-08 digital output option board. 0: 8-channel individual outputs. 1: Binary code output. 2: 8-channel Selected - Output according to F5-01 to F5-08 settings.	0 to 2	0	No	A	A	A	A	A

6

■Setting Output Items for the DO-02C Digital Output Card

If using DO-02C Digital Output Card, set the output items using F5-01 and F5-02.

■Setting Output Items for the DO-08 Digital Output Card

If using DO-08 Digital Output Card, select one of the following three output modes according to the setting in F5-09.

F5-09 Set to 0

Set Value	Terminal Number	Output Details
0: 8 separate outputs	TD5-TD11	Overcurrent (SC, OC, GF)
	TD6-TD11	Overvoltage (OV)
	TD7-TD11	Drive overload (OL2)
	TD8-TD11	Fuse blown (PUF)
	TD9-TD11	Overspeed (OS)
	TD10-TD11	Drive overheated (OH1) or motor overload (OL1)
	TD1-TD2	Zero speed detected
	TD3-TD4	Speed agreement

F5-09 Set to 1

Set Value	Terminal Number	Output Details	
1: Binary code output	TD5-TD11	bit 0	Encoded output (Refer to table below)
	TD6-TD11	bit 1	
	TD7-TD11	bit 2	
	TD8-TD11	bit 3	
	TD9-TD11	Zero speed detected	
	TD10-TD11	Speed agreement	
	TD1-TD2	Operating	
	TD3-TD4	Minor fault	

The following table shows the code outputs.

Bits 3, 2, 1, and 0	Output Details	Bits 3, 2, 1, and 0	Output Details
0000	No error	1000	External fault (EFxx)
0001	Overcurrent (SC, OC, GF)	1001	Controller error (CPFxx)
0010	Overvoltage (OV)	1010	Motor overload (OL1)
0011	Drive overload (OL2)	1011	Not used
0100	Drive overheated (OH, OH1)	1100	Power loss (UV1, UV2, or UV3)
0101	Overspeed (OS)	1101	Speed deviation (DEV)
0110	Fuse blown (PUF)	1110	PG open circuit (PGO)
0111	Dynamic braking resistor (RH) Injection brake transistor error (RR)	1111	Not used

F5-09 Set to 2

Output depends on the settings in F5-01 to F5-08.

◆ Using an Analog Reference Card

When using a AI-14B or A1-14U Analog Reference Card, set parameter b1-01 (Reference selection) to 3 (Option Card).

AI-14B provides 3 channels of bi-polar inputs with 14-bit A/D conversion accuracy (and a sign bit). The function of each channel is determined by the setting of F2-01.

AI-14U provides 2 channels of bi-polar inputs with 14-bit A/D conversion accuracy. Channel 1 is a voltage input and channel 2 is a current input. The sum of channels 1 and 2 is a frequency input. F2-01 does not need to be set for the AI-14U.

■Related Parameters

Parameter Number	Name	Description	Setting Range	Factory Setting	Change during Operation	Control Methods				
	Display					V/f	V/f with PG	Open Loop Vector 1	Flux Vector	Open Loop Vector 2
F2-01	AI-14 Input Selection AI-14 Input Sel	Sets the function for channel 1 to 3 of the AI-14B analog input reference option board. 0: 3-channel individual (Channel 1: terminal A1, Channel 2: terminal A2, Channel 3: terminal A3) 1: 3-channel addition (Summed values of channels 1 to 3 is the frequency reference) When set to 0, select 1 for b1-01. In this case, the multi-function input "Option/Drive selection" cannot be used.	0 to 1	0	No	A	A	A	A	A

■Setting Precautions

Always set b1-01 (Reference selection) to 1 (control circuit terminal) when using the AI-14B for three channels of independent inputs. When this is done, H1-01 to H1-10 (multi-function contact inputs) cannot be set to 2 (Option/Drive selection).

◆ Using a Digital Reference Card

When using a DI-08 or DI-16H2 Digital Reference Card, set b1-01 (Reference selection) to 3 (Option Card).

The DI-16H2 can be used to set a frequency using a 16-bit digital reference. The DI-08 can be used to set a frequency using a 8-bit digital reference.

■Related Parameters

Parameter Number	Name: Display	Description	Setting Range	Factory Setting	Change during Operation	Control Methods: V/f	V/f with PG	Open Loop Vector 1	Flux Vector	Open Loop Vector 2
F3-01	DI-08 / DI-16H2 Input Selection DI Input	Sets the function of the DI-08 or the DI-16H2 digital input option board. 0: BCD 1% unit 1: BCD 0.1% unit 2: BCD 0.01% unit 3: BCD 1Hz unit 4: BCD 0.1Hz unit 5: BCD 0.01Hz unit 6: BCD (5-digit) 0.01Hz unit (only effective when DI-16H2 is used.) 7: Binary input When o1-03 is set to 2 or higher, the input will be BCD, and the units will change to the o1-03 setting.	0 to 7	0	No	A	A	A	A	A
o1-03	Digital Operator Display Selection Display Scaling	Sets the units of the Frequency References (d1-01 to d1-17), the Frequency Reference Monitors (U1-01, U1-02, U1-05), and the Modbus communication frequency reference. 0: Hz 1: % (100% = E1-04) 2 to 39: RPM (Enter the number of motor poles). 40 to 39999: User display. Set the number desired at maximum output frequency. 4 digit number Number of digits from the right of the decimal point. Example 1: o1-03 = 12000, will result in frequency reference from 0.0 to 200.0 (200.0 = Fmax). Example 2: o1-03 = 21234, will result in frequency reference from 0.00 to 12.34 (12.34 = Fmax).	0 to 39999	0	No	A	A	A	A	A

■Selecting Input Terminal Functions for the DI-16H2 Digital Reference Card

The frequency reference from the DI-16H2 Card is determined by the setting of F3-01 and the 12/16-bit switch on the Option card. The possible settings are listed in the following table.

Terminal	Pin No.	12-bit Binary with Sign	16-bit Binary with Sign	3-digit BCD with Sign		4-digit BCD with Sign		4-digit BCD without Sign	
		F3-01 = 7 S1: 12 bit	F3-01 = 7 S1: 16 bit	F3-01 = 0 to 5 S1: 12 bit		F3-01 = 0 to 5 S1: 16 bit		F3-01 = 6 S1: 16 bit	
TC1	1	Bit 1 (2^0)	Bit 1 (2^0)	1	BDC digit 1 (0 to 9)	1	BDC digit 1 (0 to 9)	2	BDC digit 1 (2 to 9)
	2	Bit 1 (2^1)	Bit 1 (2^1)	2		2		4	
	3	Bit 1 (2^2)	Bit 1 (2^2)	4		4		8	
	4	Bit 1 (2^3)	Bit 1 (2^3)	8		8		1	BDC digit 2 (0 to 9)
	5	Bit 1 (2^4)	Bit 1 (2^4)	1	BDC digit 2 (0 to 9)	1	BDC digit 2 (0 to 9)	2	
	6	Bit 1 (2^5)	Bit 1 (2^5)	2		2		4	
	7	Bit 1 (2^6)	Bit 1 (2^6)	4		4		8	
	8	Bit 1 (2^7)	Bit 1 (2^7)	8		8		1	BDC digit 3 (0 to 9)
	9	Bit 1 (2^8)	Bit 1 (2^8)	1	BDC digit 3 (0 to 9)	1	BDC digit 3 (0 to 9)	2	
	10	Bit 1 (2^9)	Bit 1 (2^9)	2		2		4	
TC2	1	Bit 1 (2^{10})	Bit 1 (2^{10})	4		4		8	
	2	Bit 1 (2^{11})	Bit 1 (2^{11})	8		8		1	BDC digit 4 (0 to 9)
	3	-	Bit 1 (2^{12})		-	1	BDC digit 4 (0 to 9)	2	
	4	-	Bit 1 (2^{13})		-	2		4	
	5	-	Bit 1 (2^{14})		-	4		8	
	6	-	Bit 1 (2^{15})		-	8		1	BDC digit 5 (0 to 3)
	7	Sign signal (0: Forward, 1: Reverse)						2	
	8	SET (read) signal (1: Read)							
	9	Input signal common (0 V)							
TC3		Shield wire connection terminal							

■Application Precautions

- The maximum frequency (100% speed) reference will be used when the binary input is set (setting: 6 or 7) and all bits are 1.
- Setting F3-01 to 6 is valid only when the D1-16H2 is used. Using this setting, a frequency from 0.00 to 399.8Hz can be set in BCD. The sign bit is used as a data bit, so only positive (plus) data can be set. Also, the digit starts from 0, so the minimum setting is 0.02Hz.

■Selecting the Input Terminal Function for a DI-08 Digital Reference Card

The frequency reference from a DI-08 Card is determined by the setting of F3-01, as shown in the following table.

Terminal	Pin No.	8-bit Binary with Sign	2-digit BCD with Sign	
		F3-01 = 7	F3-01 = 0 to 5	
TC	1	Bit 1 (2^0)	1	BDC digit 1 (0 to 9)
	2	Bit 1 (2^1)	2	
	3	Bit 1 (2^2)	4	
	4	Bit 1 (2^3)	8	
	5	Bit 1 (2^4)	1	BDC digit 2 (0 to 15)
	6	Bit 1 (2^5)	2	
	7	Bit 1 (2^6)	4	
	8	Bit 1 (2^7)	8	
	9	Sign signal		
	10	SET (read) signal		
	11	Reference common signal (0 V)		

■Application Precautions

The DI-08 will not function if F3-01 is set to 6

■Selecting the Digital Reference

The range of the digital references is determined by the combination of the settings of o1-03 and F3-01. The information monitored in U1-01 (Frequency reference) will also change.

DI-16H2 Reference Ranges

When using the DI-16H2, the following ranges can be set depending on the settings of the parameters.

o1-03	F3-01	Switch S1	Reference Input Mode	Reference Setting Range	U1-01 Monitor Unit	
					o1-03 = 0	o1-03 = 1
0 or 1	0	12 bits	3-digit BCD with sign, 1%	-110 to 110%	0.01Hz	0.01%
		16 bits	4-digit BCD with sign, 1%	-110 to 110%		
	1	12 bits	3-digit BCD with sign, 0.1%	-110.0 to 110.0%		
		16 bits	4-digit BCD with sign, 0.1%	-110.0 to 110.0%		
	2	12 bits	3-digit BCD with sign, 0.01%	-15.99 to 15.99%		
		16 bits	4-digit BCD with sign, 0.01%	-110.0 to 110.0%		
	3	12 bits	3-digit BCD with sign, 1Hz	-400 to 400Hz		
		16 bits	4-digit BCD with sign, 1Hz	-400 to 400Hz		
	4	12 bits	3-digit BCD with sign, 0.1Hz	-159.9 to 159.9Hz		
		16 bits	4-digit BCD with sign, 0.1Hz	-400.0 to 400.0Hz		
	5	12 bits	3-digit BCD with sign, 0.01Hz	-15.99 to 15.99Hz		
		16 bits	4-digit BCD with sign, 0.01Hz	-159.99 to 159.99Hz		
	6	16 bits	5-digit BCD without sign, 0.01Hz	000.00 to 399.98Hz		
	7	12 bits	12-bit binary with sign, 100%/4095	-4095 to 4095		
		16 bits	16-bit binary with sign, 100%/30000	-33000 to 33000		
2 to 39	-	12 bits	3-digit BCD with sign, 1 rpm	-1599 to 1599 rpm	1 rpm	
		16 bits	4-digit BCD with sign, 1 rpm	-15999 to 15999 rpm	1 rpm	
40 to 39999	-	12 bits	3-digit BCD with sign, 100%/(1- to 4-digit setting of o1-03)	-4095 to 4095	5th digit of o1-03 setting: X = 0, unit: 1 X = 1, unit: 0.1 X = 2, unit: 0.01 X = 3, unit: 0.001	
	-	16 bits	4-digit BCD with sign, 100%/(1- to 4-digit setting of o1-03)	-10999 to 10999 (when o1-03 = 9999)		
10000 x = 1 to 3	-	16 bits	4-digit BCD with sign, 100%/10000	-11000 to 11000		

DI-08 Reference Ranges

When using the DI-08, the following ranges can be set depending on the settings of the parameters.

F3-01	Reference Input Mode	Reference Setting Range	U1-01 Monitor Unit	
			o1-03 = 0	o1-03 = 1
0	2-digit BCD with sign, 1%	-110 to 110%	0.01Hz	0.01%
1	2-digit BCD with sign, 0.1%	-15.9 to 15.9%		
2	2-digit BCD with sign, 0.01%	-1.59 to 1.59%		
3	2-digit BCD with sign, 1Hz	-159 to 159Hz		
4	2-digit BCD with sign, 0.1Hz	-15.9 to 15.9Hz		
5	2-digit BCD with sign, 0.01Hz	-1.59 to 1.59Hz		
6	-			
7	12-bit binary with sign, 100%/4095	-255 to 255		

7

Troubleshooting

This chapter describes the fault displays and countermeasure for the Drive and motor problems and countermeasures.

Protective and Diagnostic Functions 7-2
Troubleshooting 7-18

Protective and Diagnostic Functions

This section describes the alarm functions of the Drive. The alarm functions include fault detection, alarm detection, operation error detection, and autotuning error detection.

◆ Fault Detection

When the Drive detects a fault, the fault contact output operates, and the Drive output is shut OFF causing the motor to coast to a stop. (The stopping method can be selected for some faults, and the selected stopping method will be used with these faults.) A fault code is displayed on the Digital Operator.

When a fault has occurred, refer to the following table to identify and correct the cause of the fault.

Use one of the following methods to reset the fault after restarting the Drive:

- Set a multi-function contact input (H1-01 to H1-05) to 14 (Fault Reset) and turn ON the fault reset signal.
- Press the RESET Key on the Digital Operator.
- Turn the main circuit power supply OFF and then ON again.

Table 7.1 Fault Displays and Processing

Display	Meaning	Probable Causes	Corrective Actions
OC Over Current	Overcurrent The Drive output current exceeded the overcurrent detection level. (200% of rated current)	• A short-circuit or ground fault occurred at the Drive output. (A short or ground fault can be caused by motor burn damage, worn insulation, or a damaged cable.) • The load is too large or the acceleration/deceleration time is too short. • A special-purpose motor or motor with a capacity too large for the Drive is being used. • A magnetic switch was switched at the Drive output.	Reset the fault after correcting its cause.
GF Ground Fault	Ground Fault The ground fault current at the Drive output exceeded approximately 50% of the Drive rated output current.	A ground fault occurred at the Drive output. (A ground fault can be caused by motor burn damage, worn insulation, or a damaged cable.)	Reset the fault after correcting its cause.
PUF Main IBGT Fuse Blown	Fuse Blown The fuse in the main circuit is blown.	The output transistor has failed because of a short-circuit or ground fault at the Drive output. Check whether there is a short-circuit between the following terminals. A short-circuit will damage the output transistor: B1 (⊕3) ←→ U/T1, V/T2, W/T3 ⊖ ←→ U/T1, V/T2, W/T3	Replace the Drive after correcting the cause.
OV DC Bus Fuse Open	Main Circuit Overvoltage The main circuit DC voltage exceeded the overvoltage detection level. 200-240 V class: Approx. 410 V 380-380 V class: Approx. 820 V	The deceleration time is too short and the regenerative energy from the motor is too large.	Increase the deceleration time or connect a braking resistor (or Braking Resistor Unit).
		The power supply voltage is too high.	Decrease the voltage so it's within specifications.

Table 7.1 Fault Displays and Processing (Continued)

Display	Meaning	Probable Causes	Corrective Actions
UV1 DC Bus Undervolt	Main Circuit Undervoltage The main circuit DC voltage is below the Undervoltage Detection Level (L2-05). 200-240 V class: Approx. 190 V 380-380 V class: Approx. 380 V	• An open-phase occurred with the input power supply. • A momentary power loss occurred. • The wiring terminals for the input power supply are loose. • The voltage fluctuations in the input power supply are too large.	Reset the fault after correcting its cause.
UV2 CTL PS Undervolt	Control Power Fault The control power supply voltage dropped.	-	• Try turning the power supply off and on. • Replace the Drive if the fault continues to occur.
UV3 MC Answer-back	Inrush Prevention Circuit Fault A fault occurred in the surge prevention circuit.	-	• Try turning the power supply off and on. • Replace the Drive if the fault continues to occur.
PF Input Pha Loss	Main Circuit Voltage Fault The main circuit DC voltage oscillates unusually (not when regenerating). This fault is detected when L8-05 is set to “Enabled.”	• An open-phase occurred in the input power supply. • A momentary power loss occurred. • The wiring terminals for the input power supply are loose. • The voltage fluctuations in the input power supply are too large. • The voltage balance between phases is bad.	Reset the fault after correcting its cause.
LF Output Pha Loss	Output Open-phase An open-phase occurred at the Drive output. This fault is detected when L8-07 is set to “Enabled.”	• There is a broken wire in the output cable. • There is a broken wire in the motor winding. • The output terminals are loose.	Reset the fault after correcting its cause.
		The motor being used has a capacity less than 5% of the Drive's maximum motor capacity.	Check the motor and Drive capacity.
OH (OH1) Heatsnk Overtemp (Heatsnk MAX Temp)	Cooling Fin Overheating The temperature of the Drive's cooling fins exceeded the setting in L8-02 or 105°C.	The ambient temperature is too high.	Install a cooling unit.
		There is a heat source nearby.	Remove the heat source.
		The Drive's cooling fan has stopped.	Replace the cooling fan. (Contact our sales representative.)
	Drive's Cooling Fan Stopped (18.5 kW or higher)	The Drive's cooling fan has stopped.	
OH3 Motor Overheat 1	Motor Overheating Alarm The Drive will stop or will continue to operate according to the setting of L1-03.	The motor has overheated.	Check the size of the load and the length of the acceleration, deceleration, and cycle times.
			Check the V/f characteristics.
			Check the Motor Rated Current (E2-01).

Table 7.1 Fault Displays and Processing (Continued)

Display	Meaning	Probable Causes	Corrective Actions
OH4 Motor Overheat 2	Motor Overheating Fault The Drive will stop according to the setting of L1-04.	The motor has overheated.	Check the size of the load and the length of the acceleration, deceleration, and cycle times.
			Check the V/f characteristics.
			Check the Motor Rated Current (E2-01).
RH DynBrk Resistor	Installed Braking Resistor Overheating Braking resistor protection function set in L8-01 has operated.	The deceleration time is too short and the regenerative energy from the motor is too large.	• Reduce the load, increase the deceleration time, or reduce the motor speed. • Change to a Braking Resistor Unit.
RR DynBrk Transistr	Internal Braking Transistor Fault The braking transistor is not operating properly.	-	• Try turning the power supply off and on. • Replace the Drive if the fault continues to occur.
OL1 Motor Overloaded	Motor Overload The motor overload protection function has operated based on the internal electronic thermal value.	The load is too heavy. The acceleration time, deceleration time, and cycle time are too short.	Check the size of the load and the length of the acceleration, deceleration, and cycle times.
		The V/f characteristics voltage is too high.	Check the V/f characteristics.
		The Motor Rated Current (E2-01) is incorrect.	Check the Motor Rated Current (E2-01).
OL2 Inv Overloaded	Drive Overload The Drive overload protection function has operated based on the internal electronic thermal value.	The load is too heavy. The acceleration time, deceleration time and cycle time are too short.	Check the size of the load and the length of the acceleration, deceleration, and cycle times.
		The V/f characteristics voltage is too high.	Check the V/f characteristics.
		The Drive capacity is too low.	Replace the Drive with one that has a larger capacity.
OL3 Overtorque Det 1	Overtorque Detected 1 There has been a current greater than the setting in L6-02 for longer than the setting in L6-03.	-	• Make sure that the settings in L6-02 and L6-03 are appropriate. • Check the mechanical system and correct the cause of the overtorque.
OL4 Overtorque Det 2	Overtorque Detected 2 There has been a current greater than the setting in L6-05 for longer than the setting in L6-06.	-	• Make sure that the current setting in L6-05 and time setting in L6-06 are appropriate. • Check the mechanical system and correct the cause of the overtorque.
OL7 HSB-OL	High-slip Braking OL The output frequency did not change for longer than the time set in n3-04.	The inertia returned to the load is too large.	• Make sure the load is an inertial load. • Set the system so that the deceleration time that does not produce 0 V is 120 s or less.

Table 7.1 Fault Displays and Processing (Continued)

Display	Meaning	Probable Causes	Corrective Actions
UL3 Undertorq Det 1	Undertorque Detected 1 There has been a current less than the setting in L6-02 for longer than the setting in L6-03.	-	• Make sure that the settings in L6-02 and L6-03 are appropriate. • Check the mechanical system and correct the cause of the overtorque.
UL4 Undertorq Det 2	Undertorque Detected 2 There has been a current less than the setting in L6-05 for longer than the setting in L6-06.	-	• Make sure that the current setting in L6-05 and time setting in L6-06 are appropriate. • Check the mechanical system and correct the cause of the overtorque.
OS Overspeed Det	Overspeed The speed has been greater than the setting in F1-08 for longer than the setting in F1-09.	Overshooting/Undershooting are occurring.	Adjust the gain again.
		The reference speed is too high.	Check the reference circuit and reference gain.
		The settings in F1-08 and F1-09 aren't appropriate.	Check the settings in F1-08 and F1-09.
PGO PG Open	PG Disconnection Detected PG pulses were input when the Drive was outputting a frequency.	There is a break in the PG wiring.	Fix the broken/disconnected wiring.
		The PG is wired incorrectly.	Fix the wiring.
		Power isn't being supplied to the PG.	Supply power to the PG properly.
		-	Check for open circuit when using brake (motor).
DEV Speed Deviation	Excessive Speed Deviation The speed deviation has been greater than the setting in F1-10 for longer than the setting in F1-11.	The load is too heavy.	Reduce the load.
		The acceleration time and deceleration time are too short.	Lengthen the acceleration time and deceleration time.
		The load is locked.	Check the mechanical system.
		The settings in F1-10 and F1-11 aren't appropriate.	Check the settings in F1-10 and F1-11.
		-	Check for open circuit when using brake (motor).
CF Out of Control	Control Fault The torque limit was reached continuously for 3 seconds or longer during a deceleration stop during open-loop vector control 1.	Motor parameter settings are not correct.	• Check the motor parameters. • Perform autotuning.
	An error occurred in the speed estimation calculation for open-loop vector control 2.	Motor parameter settings are not correct. Run command was received when the motor was coasting.	• Perform autotuning. • Input the run command after the motor stops. • Set b3-01 (Speed search selection) to 1 or 3 (speed search enabled at startup). • Refer to *Precautions When Using Open-loop Vector Control 2* on page *10-4*.

Table 7.1 Fault Displays and Processing (Continued)

Display	Meaning	Probable Causes	Corrective Actions
FBL Feedback Loss	PID Feedback Reference Lost A PID feedback reference loss was detected (b5-12 = 2) and the PID feedback input was less than b5-13 (PID feedback loss detection level) for longer than the time set in b5-14 (PID feedback loss detection time).	-	-
EF0 Opt External Flt	External fault input from Communications Option Card	-	Check the Communications Option Card and communications signals.
EF3 Ext Fault S3	External fault (Input terminal 3)	An “external fault” was input from a multi-function input terminal.	• Reset external fault inputs to the multi-function inputs. • Remove the cause of the external fault.
EF4 Ext Fault S4	External fault (Input terminal 4)		
EF5 Ext Fault S5	External fault (Input terminal 5)		
EF6 Ext Fault S6	External fault (Input terminal 6)		
EF7 Ext Fault S7	External fault (Input terminal 7)		
EF8 Ext Fault S8	External fault (Input terminal 8)		
EF9 Ext Fault S9	External fault (Input terminal 9)		
EF10 Ext Fault S10	External fault (Input terminal 10)		
EF11 Ext Fault S11	External fault (Input terminal 11)		
EF12 Ext Fault S12	External fault (Input terminal 12)		
SVE Zero Servo Fault	Zero Servo Fault The rotation position moved during zero servo operation.	The torque limit is too small.	Increase the limit.
		The load torque is too large.	Reduce the load torque.
		-	Check for signal noise.

Table 7.1 Fault Displays and Processing (Continued)

Display	Meaning	Probable Causes	Corrective Actions
OPR Oper Dis-connect	Digital Operator Connection Fault The connection to the Digital Operator was broken during operation for a RUN command from the Digital Operator.	-	Check the connection to the Digi-tal Operator.
CE Modbus Com Err	MODBUS Communications Error A normal reception was not possible for 2 s or longer after control data was received once.	-	Check the communications devices and communications sig-nals.
BUS Option Com Err	Option Communications Error A communications error was detected during a run command or while setting a frequency reference from a Commu-nications Option Card.	-	Check the communications devices and communications sig-nals.
E-15 SI-F/G Com Err	SI-F/G Communications Error Detected A communications error was detected when a run command or frequency reference was set from an Option Card and continuous operation was set for the E-15 operation selection.	-	Check the communications sig-nals.
E-10 SI-F/G CPU down	SI-F/G Option Card CPU Failure SI-F/G Option Card operation failed.	Digital Operator connection is faulty.	Disconnect and then reconnect the Digital Operator.
		Drive control circuit is faulty.	Replace the Drive.
CPF00 CPF	Digital Operator Communications Error 1 Communications with the Digital Operator were not established within 5 seconds after the power was turned on.	The Digital Operator's connector isn't connected properly.	Disconnect the Digital Operator and then connect it again.
		The Drive's control circuits are faulty.	Replace the Drive.
	CPU External RAM Fault	-	Try turning the power supply off and on again.
		The control circuits were destroyed.	Replace the Drive.
CPF01 CPF01	Digital Operator Communications Error 2 After communications were estab-lished, there was a communications error with the Digital Operator for more than 2 seconds.	The Digital Operator isn't connected properly.	Disconnect the Digital Operator and then connect it again.
		The Drive's control circuits are faulty.	Replace the Drive.
CPF02 BB Circuit Err	Baseblock circuit error	-	Try turning the power supply off and on again.
		The control circuit is damaged.	Replace the Drive.
CPF03 EEPROM Error	EEPROM error	-	Try turning the power supply off and on again.
		The control circuit is damaged.	Replace the Drive.

Table 7.1 Fault Displays and Processing (Continued)

Display	Meaning	Probable Causes	Corrective Actions
CPF04 Internal A/D Err	CPU internal A/D converter error	-	Try turning the power supply off and on again.
		The control circuit is damaged.	Replace the Drive.
CPF05 External A/D Err	CPU internal A/D converter error	-	Try turning the power supply off and on again.
		The control circuit is damaged.	Replace the Drive.
CPF06 Option error	Option Card connection error	The Option Card is not connected properly.	Turn off the power and insert the Card again.
		The Drive or Option Card is faulty.	Replace the Option Card or the Drive.
CPF07 RAM-Err	ASIC internal RAM fault	-	Try turning the power supply off and on again.
		The control circuit is damaged.	Replace the Drive.
CPF08 WAT-Err	Watchdog timer fault	-	Try turning the power supply off and on again.
		The control circuit is damaged.	Replace the Drive.
CPF09 CPU-Err	CPU-ASIC mutual diagnosis fault	-	Try turning the power supply off and on again.
		The control circuit is damaged.	Replace the Drive.
CPF10 ASIC-Err	ASIC version fault	The Drive control circuit is faulty	Replace the Drive.
CPF20 Option A/D error	Communications Option Card A/D converter error	The Option Card is not connected properly.	Turn off the power and insert the Card again.
		The Option Card's A/D converter is faulty.	Replace the Communications Option Card.
CPF21 Option CPU down	Communications Option Card self diagnostic error	Communications Option Card fault.	Replace the Option Card.
CPF22 Option Type Err	Communications Option Card model code error		
CPF23 Option DPRAM Err	Communications Option Card DPRAM error		

◆ Alarm Detection

Alarms are detected as a type of Drive protection function that do not operate the fault contact output. The system will automatically returned to its original status once the cause of the alarm has been removed.

The Digital Operator display flashes and the alarm is output from the multi-function outputs (H2-01 to H2-03).

When an alarm occurs, take appropriate countermeasures according to the table below.

Table 7.2 Alarm Displays and Processing

Display	Meaning	Probable causes	Corrective Actions
EF (blinking) External Fault	Forward/Reverse Run Commands Input Together Both the forward and reverse run commands have been ON for more than 0.5 s.	-	Check the sequence of the forward and reverse run commands. Since the rotational direction is unknown, the motor will be decelerated to a stop when this minor fault occurs.
UV (blinking) DC Bus Undervolt	Main Circuit Undervoltage The following conditions occurred when there was no Run signal. • The main circuit DC voltage was below the Undervoltage Detection Level Setting (L2-05). • The surge current limiting contactor opened. • The control power supply voltage when below the CUV level.	See causes for UV1, UV2, and UV3 faults in the previous table.	See corrective actions for UV1, UV2, and UV3 faults in the previous table.
OV (blinking) DC Bus Overvolt	Main Circuit Overvoltage The main circuit DC voltage exceeded the overvoltage detection level. 200-240 V class: Approx. 400 V 380-380 V class: Approx. 800 V	The power supply voltage is too high.	Decrease the voltage so it's within specifications.
OH (blinking) Heatsink Overtemp	Cooling Fin Overheating The temperature of the Drive's cooling fins exceeded the setting in L8-02.	The ambient temperature is too high.	Install a cooling unit.
		There is a heat source nearby.	Remove the heat source
		The Drive cooling fan has stopped.	Replace the cooling fan. (Contact your Yaskawa representative.)
OH2 (blinking) Over Heat 2	Drive Overheating Pre-alarm An OH2 alarm signal (Drive overheating alarm signal) was input from a multi-function input terminal (S3 to S12).	-	Clear the multi-function input terminal's overheating alarm input.
OH3 (blinking) Motor Overheat 1	Motor overheating E was set for H3-09 and the motor temperature thermistor input exceeded the alarm detection level.	The motor has overheated.	Check the size of the load and the length of the acceleration, deceleration, and cycle times.
			Check the V/f characteristics.
			Check the motor temperature input on terminals A1 and A2.

Table 7.2 Alarm Displays and Processing (Continued)

Display	Meaning	Probable causes	Corrective Actions
OL3 (blinking) Over-torque Det 1	Overtorque 1 There has been a current greater than the setting in L6-02 for longer than the setting in L6-03.	-	• Make sure that the settings in L6-02 and L6-03 are appropriate. • Check the mechanical system and correct the cause of the overtorque.
OL4 (blinking) Over-torque Det 2	Overtorque 2 There has been a current greater than the setting in L6-05 for longer than the setting in L6-06.	-	• Make sure that the current setting in L6-05 and time setting in L6-06 are appropriate. • Check the mechanical system and correct the cause of the overtorque.
UL3 (blinking) Under-torq Det 1	Undertorque 1 There has been a current less than the setting in L6-02 for longer than the setting in L6-03.	-	• Make sure that the settings in L6-02 and L6-03 are appropriate. • Check the mechanical system and correct the cause of the overtorque.
UL4 (blinking) Under-torq Det 2	Undertorque 2 There has been a current less than the setting in L6-05 for longer than the setting in L6-06.	-	• Make sure that the current setting in L6-05 and time setting in L6-06 are appropriate. • Check the mechanical system and correct the cause of the overtorque.
OS (blinking) Over-speed Det	Overspeed The speed has been greater than the setting in F1-08 for longer than the setting in F1-09.	Overshooting/undershooting are occurring.	Adjust the gain again.
		The reference speed is too high.	Check the reference circuit and reference gain.
		The settings in F1-08 and F1-09 aren't appropriate.	Check the settings in F1-08 and F1-09.
PGO (blinking) PG Open	The PG is disconnected The Drive is outputting a frequency, but PG pulses aren't being input.	There is a break in the PG wiring.	Fix the broken/disconnected wiring.
		The PG is wired incorrectly.	Fix the wiring.
		Power isn't being supplied to the PG.	Supply power to the PG properly.
DEV (blinking) Speed Devia-tion	Excessive Speed Deviation The speed deviation has been greater than the setting in F1-10 for longer than the setting in F1-11.	The load is too large.	Reduce the load.
		The acceleration time and decelera-tion time are too short.	Lengthen the acceleration time and deceleration time.
		The load is locked.	Check the mechanical system.
		The settings in F1-10 and F1-11 aren't appropriate.	Check the settings in F1-10 and F1-11.
EF0 Opt External Flt	External fault detected for Commu-nications Card other than SI-K2 Continuing operation was specified for EF0 (F6-03 = 3)and an external fault was input from the Option Card.	-	Remove the cause of the external fault.

Table 7.2 Alarm Displays and Processing (Continued)

Display	Meaning	Probable causes	Corrective Actions
EF3 (blinking) Ext Fault S3	External fault (Input terminal S3)	An external fault was input from a multi-function input terminal (S3 to S12).	• Reset external fault inputs to the multi-function inputs. • Remove the cause of the external fault.
EF4 (blinking) Ext Fault S4	External fault (Input terminal S4)		
EF5 (blinking) Ext Fault S5	External fault (Input terminal S5)		
EF6 (blinking) Ext Fault S6	External fault (Input terminal S6)		
EF7 (blinking) Ext Fault S7	External fault (Input terminal S7)		
EF8 (blinking) Ext Fault S8	External fault (Input terminal S8)		
EF9 (blinking) Ext Fault S9	External fault (Input terminal S9)		
EF10 (blinking) Ext Fault S10	External fault (Input terminal S10)		
EF11 (blinking) Ext Fault S11	External fault (Input terminal S11)		
EF12 (blinking) Ext Fault S12	External fault (Input terminal S12)		
FBL (blinking) Feed-back Loss	PID Feedback Reference Lost A PID feedback reference loss was detected (b5-12 = 2) and the PID feed-back input was less than b5-13 (PID feedback loss detection level) for longer than the time set in b5-14 (PID feedback loss detection time).	-	-

Table 7.2 Alarm Displays and Processing (Continued)

Display	Meaning	Probable causes	Corrective Actions
CE (blinking) modbus Com Err	MODBUS Communications Error Normal reception was not possible for 2 s or longer after received control data.	-	Check the communications devices and signals.
BUS (blinking) Option Com Err	Option Card Communications Error A communications error occurred in a mode where the run command or a frequency reference is set from an Communications Option Card.	-	Check the communications devices and signals.
CALL (blinking) Com Call	Communications on Standby Control data was not normally received when power was turned ON.	-	Check the communications devices and signals.
E-15 SI-F/G Com Err	SI-F/G Communications Error Detected A communications error was detected when a run command or frequency reference was set from an Option Card and continuous operation was set for the E-15 operation selection.	-	Check the communications signals.

◆ Operation Errors

An operation error will occur if there is an invalid setting or a contradiction between two parameter settings. It won't be possible to start the Drive until the parameters have been set correctly. (The alarm output and fault contact outputs will not operate either.)

When an operation error has occurred, refer to the following table to identify and correct the cause of the errors.

Table 7.3 Operation Error Displays and Incorrect Settings

Display	Meaning	Incorrect settings
OPE01 kVA Selection	Incorrect Drive capacity setting	The Drive capacity setting doesn't match the Unit. (Contact your Yaskawa representative.)
OPE02 Limit	Parameter setting range error	The parameter setting is outside of the valid setting range. When this error is displayed, press the ENTER Key to display U1-34 (OPE fault parameter).
OPE03 Terminal	Multi-function input selection error	One of the following errors has been made in the multi-function input (H1-01 to H1-10) settings: • The same setting has been selected for two or more multi-function inputs. • An up or down command was selected independently. (They must be used together.) • The up/down commands (10 and 11) and Accel/Decel Ramp Hold (A) were selected at the same time. • Speed Search 1 (61, maximum output frequency) and Speed Search 2 (62. set frequency) were selected at the same time. • The up/down commands (10 and 11) were selected while PID Control Mode Selection (b5-01) was enabled. • Positive and negative speed commands have not been set at the same time. • The emergency stop command NO and NC have been set at the same time.
OPE05 Sequence Select	Option Card selection error	The Option Card was selected as the frequency reference source by setting b1-01 to 3, but an Option Card isn't connected (C option).
OPE06 PG Opt Missing	Control method selection error	V/f control with PG feedback was selected by setting A1-02 to 1, but a PG Speed Control Card isn't connected.
OPE07 Analog Selection	Multi-function analog input selection error	The same setting has been selected for the analog input selection and the PID function selection. • H3-09 = B and H6-01 = 1 • H3-09 = C and H6-01 = 2 b1-01 (Reference Selection) is set to 4 (pulse input) and H6-01 (Pulse Train Input Function Selection) is set to a value other than 0 (frequency reference).
OPE08	Parameter selection error	A setting has been made that is not required in the current control method. Ex.: A function used only with open-loop vector control was selected for V/f control. When this error is displayed, press the ENTER Key to display U1-34 (OPE fault parameter).
OPE09	PID control selection error	The following settings have been made at the same time. • b5-01 (PID Control Mode Selection) has been set to a value other than 0. • b5-15 (PID Sleep Function Operation Level) has been set to a value other than 0. • b1-03 (Stopping Method Selection) has been set to 2 or 3.

Table 7.3 Operation Error Displays and Incorrect Settings (Continued)

Display	Meaning	Incorrect settings
OPE10 V/f Ptrn Set-ting	V/f data setting error	Parameters E1-04, E1-06, E1-07, and E1-09 do not satisfy the following conditions: • E1-04 (FMAX) ≥ E1-06 (FA) > E1-07 (FB) ≥ E1-09 (FMIN) • E3-02 (FMAX) ≥ E3-04 (FA) > E3-05 (FB) ≥ E3-07 (FMIN)
OPE11 Carr Freq/ On-Delay	Parameter setting error	One of the following parameter setting errors exists. • C6-05 (Carrier Frequency Gain) > 6, the Carrier Frequency Lower Limit (C6-04) > the Carrier Frequency Gain(C6-05) • Upper/lower limit error in C6-03 to 05. • C6-01 is 0 and C6-02 is 2 to E. • C6-01 is 1 and C6-02 is 7 to E.
ERR EEPROM R/W Err	EEPROM write error	A verification error occurred when writing EEPROM. • Try turning the power supply off and on again. • Try setting the parameters again.

◆ Errors During Autotuning

The errors that can occur during autotuning are given in the following table. If an error is detected, the motor will coast to a stop and an error code will be displayed on the Digital Operator. The error contact output and alarm output will not function.

Table 7.4 Errors During Autotuning

Display	Meaning	Probable causes	Corrective Actions
Data Invalid	Motor data error	There is an error in the data input for autotuning. There is an error in the relationship between the motor output and the motor rated current. The is an error between the no-load current setting and the input motor rated current (when autotuning for only line-to-line resistance is performed for vector control).	• Check the input data. • Check the capacity of the Drive and motor. • Check the motor rated current and no-load current.
Minor Fault	Alarm	A minor fault occurred during autotuning (xxx).	• Check the input data. • Check wiring and the machine. • Check the load.
STOP key	STOP key input	The STOP Key was pressed to cancel autotuning.	
Resistance	Line-to-line resistance error	Autotuning was not completed in the specified time. The results of autotuning has exceeded the setting range for a user parameter.	• Check the input data. • Check motor wiring. • If the motor is connected to the machine, disconnect it.
No-Load Current	No-load current error		
Rated Slip	Rated slip error		
Accelerate	Acceleration error (detected only for rotational autotuning)	The motor did not accelerate in the specified time.	• Increase C1-01 (Acceleration Time 1). • Increase L7-01 and L7-02 (Reverse Torque Limits) if they are low. • If the motor is connected to the machine, disconnect it.
Motor Speed	Motor speed error (detected only for rotational autotuning)	The torque reference was too high (100%) during acceleration (for open-loop vector control only).	• If the motor is connected to the machine, disconnect it. • Increase C1-01 (Acceleration Time 1). • Check the input data (particularly the number of PG pulses and the number of motor poles).
I-det. Circuit	Current detection error	The current flow exceeded the motor rated current.	Check the current detection circuit, motor wiring, current detector, and installation methods.
		The detected current sign was the opposite of what it should be.	
		There is a phase fault for U/T1, V/T2, W/T3.	
Leak Inductance	Leakage inductance error	Autotuning was not completed in the specified time.	Check motor wiring.

Table 7.4 Errors During Autotuning (Continued)

Display	Meaning	Probable causes	Corrective Actions
V/f Over Setting	V/f settings excessive*	The torque reference exceeded 100% and the no-load torque exceeded 70% during autotuning.	• Check and correct the settings. • Disconnect the load from the motor.
Saturation	Motor core saturation error (detected only for rotational autotuning)*	The results of autotuning has exceeded the setting range for a user parameter so a temporary setting was made for the motor core saturation coefficient.	• Check the input data. • Check motor wiring. • If the motor is connected to the machine, disconnect it.
Rated FLA Alm	Rated current setting alarm*	The rated current is set high.	Check the input data (particularly the motor output current and motor rated current).

* Displayed after autotuning has been completed.

◆ Errors when Using the Digital Operator Copy Function

The errors that can occur when using the copy function from the Digital Operator are given in the following table. An error code will be displayed on the Digital Operator. If a Digital Operator key is pressed when an error code is being displayed, the display will be cleared and 03-01 will be displayed. The error contact output and alarm output will not function.

Table 7.5 Errors during Copy Function

Function	Display	Meaning	Probable causes	Corrective Actions
Read	PRE READ IMPOSSIBLE	Digital Operator write-protected	o3-01 was set to 1 to write a parameter when the Digital Operator was write-protected (o3-02 = 0).	Set o3-02 to 1 to enable writing parameters with the Digital Operator.
	IFE READ DATA ERROR	Illegal read data	The read data length does not agree.	Repeat the read. Check the Digital Operator cable. Replace the Digital Operator.
			The write data is incorrect.	
	RDE DATA ERROR	Illegal write status	An attempted write of a parameter to EEPROM on the Digital Writer failed.	A low Drive voltage has been detected. Repeat the read. Replace the Digital Operator.
Copy	CPE ID UNMATCH	ID not matched	The Drive product code or software number is different.	Use the copy function for the same product code and software number.
	VAE INV. KVA UNMATCH	Drive capacity matched	The capacity of the Drive being copied and the capacity in the Digital Operator are different.	Use the copy function for the same Drive capacity.
	CRE CONTROL UNMATCH	Control method matched	The control method of the Drive being copied and the control method in the Digital Operator are different.	Use the copy function for the same control method.
	CYE COPY ERROR	Verify error	The parameter written to the Drive was compared with the parameter in the Digital Operator and they were different.	Retry the copy.
	CSE SUM CHECK ERROR	Checksum error	The checksum in the Drive parameter area was compared with the checksum in the Digital Operator parameter area and they were different.	Retry the copy.
Verify	VYE VERIFY ERROR	Verify error	The Digital Operator and Drive settings do not agree.	Retry the copy and verify again.

Troubleshooting

Due to parameter setting errors, faulty wiring, and so on, the Drive and motor may not operate as expected when the system is started up. If that should occur, use this section as a reference and apply the appropriate measures.

If the contents of the fault are displayed, refer to *Protective and Diagnostic Functions*.

◆ If Parameters Cannot Be Set

Use the following information if an Drive parameter cannot be set.

■The display does not change when the Increment and Decrement Keys are pressed.

The following causes are possible.

The Drive is operating (drive mode).

There are some parameters that cannot be set during operation. Turn the Drive off and then make the settings.

Parameter write enable is input.

This occurs when “parameter write enable” (set value: 1B) is set for a multi-function input terminal (H1-01 to H1-10). If the parameter write enable input is OFF, the parameters cannot be changed. Turn it ON and then set the parameters.

Passwords do not match. (Only when a password is set.)

If the parameter A1-04 (Password) and A1-05 (Password Setting) numbers are different, the parameters for the initialize mode cannot be changed. Reset the password.

If you cannot remember the password, display A1-05 (Password Setting) by pressing the Reset/Select Key and the Menu Key simultaneously while in the A1-04 display. Then reset the password. (Input the reset password in parameter A1-04.)

■OPE01 through OPE11 is displayed.

The set value for the parameter is wrong. Refer to *Operation Errors* in this chapter and correct the setting.

■CPF00 or CPF01 is displayed.

This is a Digital Operator communications error. The connection between the Digital Operator and the Drive may be faulty. Remove the Digital Operator and then re-install it.

◆ If the Motor Does Not Operate

Use the following information if the motor does not operate.

■The motor does not operate when the RUN Key on the Digital Operator is pressed.

The following causes are possible.

IMPORTANT

If the Drive is not in drive mode, it will remain in ready status and will not start. Press the Menu Key to display the drive mode, and enter the drive mode by pressing the DATA/ENTER Key. “-Rdy-” will be displayed when drive mode is entered.

The operation method setting is wrong.

If parameter b1-02 (Operation Method Selection) is set to 1 (control circuit terminal), the motor will not operate when the Run Key is pressed. Either press the LOCAL/REMOTE Key* to switch to Digital Operator operation or set b1-02 to 0 (Digital Operator).

INFO

The LOCAL/REMOTE Key is enabled by setting o2-01 to 1 and disabled by setting o2-01 to 2. It is enabled when the drive mode is entered.

The frequency reference is too low.

If the frequency reference is set below the frequency set in E1-09 (Minimum Output Frequency), the Drive will not operate.

Raise the frequency reference to at least the minimum output frequency.

There is a multi-function analog input setting error.

If multi-function analog input H3-09 is set to 1 (frequency gain), and if no voltage (current) is input, then the frequency reference will be zero. Check to be sure that the set value and analog input value are correct.

■The motor does not operate when an external operation signal is input.

The following causes are possible.

The Drive is not in drive mode.

If the Drive is not in drive mode, it will remain in ready status and will not start. Press the MENU Key to display the drive mode, and enter the drive mode by pressing the DATA/ENTER Key. “-Rdy-” will be displayed when drive mode is entered.

The operation method selection is wrong.

If parameter b1-02 (reference selection) is set to 0 (Digital Operator), the motor will not operate when an external operation signal is input. Set b1-02 to 1 (control circuit terminal) and try again.

Similarly, the motor will also not operate if the LOCAL/REMOTE Key has been pressed to switch to Digital Operator operation. In that case press the LOCAL/REMOTE Key* again to return to the original setting.

INFO

The LOCAL/REMOTE Key is enabled by setting o2-01 to 1 and disabled by setting o2-01 to 2. It is enabled when the drive mode is entered.

A 3-wire sequence is in effect.

The input method for a 3-wire sequence is different than when operating by forward/stop and reverse/stop (2-wire sequence). When 3-wire sequence is set, the motor will not operate even when an input terminal suitable for forward run/stop and reverse run/stop is turned ON.

When using a 3-wire sequence, refer to the timing chart and input the proper signals.

When using a 2-wire sequence, set the multi-function input terminal (H1-01 through H1-10, terminals S3 to S11) to a value other than 0.

The frequency reference is too low.

If the frequency reference is set below the frequency set in E1-09 (Minimum Output Frequency), the Drive will not operate. Raise the frequency reference to at least the minimum output frequency.

There is a multi-function analog input setting error.

If multi-function analog inputs H3-05 (Multi-function Analog Input Terminal A3 Selection) and H3-09 (Multi-function Analog Input Terminal A2 Selection) are set to 1 (frequency gain), and if no voltage (current) is input, then the frequency reference will be zero. Check to be sure that the set value and analog input value are correct.

■The motor stops during acceleration or when a load is connected.

The load may be too heavy. The Drive has a stall prevention function and an automatic torque boost function, but the motor responsiveness limit may be exceeded if acceleration is too rapid or if the load is too heavy. Lengthen the acceleration time or reduce the load. Also consider increasing the motor capacity.

■The motor only rotates in one direction.

“Reverse run prohibited” is selected. If b1-04 (Prohibition of Reverse Operation) is set to 1 (reverse run prohibited), the Drive will not receive reverse run commands. To use both forward and reverse operation, set b1-04 to 0.

◆ If the Direction of the Motor Rotation is Reversed

If the motor operates in the wrong direction, the motor output wiring is faulty. When the Drive T1(U), T2(V), and T3(W) are properly connected to the motor T1(U), T2(V), and T3(W), the motor operates in a forward direction when a forward run command is executed. The forward direction depends on the manufacturer and the motor type, so be sure to check the specifications.

The direction of rotation can be reversed by switching two wires among U, V, and W.

◆ If the Motor Does Not Put Out Torque or If Acceleration is Slow

Use the following information is the motor does not output torque or if acceleration is too slow.

■The torque limit has been reached.

When a torque limit has been set in parameters L7-01 to L7-04, no torque will be output beyond that limit. This can cause the torque to be insufficient, or the acceleration time to be too long. Check to be sure that the value set for the torque limit is suitable.

If torque limits have been set for the multi-function analog input (H3-05 or H3-09 = 10 to 12 or 15), check to be sure that the analog input value is suitable.

■The stall prevention level during acceleration is too low.

If the value set for L3-02 (Stall Prevention Level during Acceleration) is too low, the acceleration time will be too long. Check to be sure that the set value is suitable.

■The stall prevention level during running is too low.

If the value set for L3-06 (Stall Prevention Level during Running) is too low, the speed will drop before outputting torque. Check to be sure that the set value is suitable.

■Autotuning has not been performed for vector control

Vector control will not be perform if autotuning has not been performed. Perform autotuning separately for the motor, or set the motor parameters through calculations. Alternatively, change the Control Method Selection (A1-02) to V/f control (0 or 1).

◆ If the Motor Operates Higher Than the Reference

Use the following information if the motor operates higher than the reference.

■The analog frequency reference bias setting is wrong (the gain setting is wrong).

The frequency reference bias set in parameter H3-03 is added to the frequency reference. Check to be sure that the set value is suitable.

■A signal is being input to the frequency reference (current) terminal A1.

When 1F (frequency reference) is set for parameter H3-09 (Multi-function Analog Input Terminal A2 Function Selection), a frequency corresponding to the terminal A2 input voltage (current) is added to the frequency reference. Check to be sure that the set value and analog input value are suitable.

◆ If the Slip Compensation Function Has Low Speed Precision

If speed control accuracy is low for the slip compensation function, the slip compensation limit has been reached. With the slip compensation function, compensation cannot be carried out beyond the slip compensation limit set in parameter C3-03. Check to be sure that the set value is suitable.

◆ If There is Low Speed Control Accuracy at High-speed Rotation in Open-loop Vector Control Mode

The motor's rated voltage is high.

The Drive's maximum output voltage is determined by its input voltage. (For example, if 200 Vac is input, then the maximum output voltage will be 200 Vac.) If, as a result of vector control, the output voltage reference value exceeds the Drive output voltage maximum value, the speed control accuracy will decrease. Use a motor with a low rated voltage (i.e., a special motor for use with vector control), or change to flux vector control.

◆ If Motor Deceleration is Slow

Use the following information when the motor deceleration is slow.

■The deceleration time is long even when braking resistor is connected.

The following causes are possible.

“Stall prevention during deceleration enabled” is set.

When braking resistor is connected, set parameter L3-04 (Stall Prevention Selection during Deceleration) to 0 (disabled) or 3 (with braking resistor). When this parameter is set to 1 (enabled, the factory setting), braking resistor does not fully function.

The deceleration time setting is too long.

Check the deceleration time setting (parameters C1-02, C1-04, C1-06, and C1-08).

Motor torque is insufficient.

If the parameters are correct and there is no overvoltage fault, then the motor's power is limited. Consider increasing the motor capacity.

The torque limit has been reached.

When a torque limit has been set in parameters L7-01 to L7-04, no torque will be output beyond that limit. This can cause the deceleration time to be too long. Check to be sure that the value set for the torque limit is suitable.

If torque limits have been set for the multi-function analog input terminal A2 Function H3-09 (set value: 10 to 12 or 15), check to be sure that the analog input value is suitable.

■If the Vertical-axis Load Drops When Brake is Applied

The sequence is incorrect. The Drive goes into DC injection braking status for 0.5 seconds after deceleration is completed. (This is the factory-set default.)

To ensure that the brake holds, set frequency detection 2 (H2-01 = 5) for the multi-function contact output terminals (M1 and M2) so that the contacts will turn OFF when the output frequency is greater than L4-01 (3.0 to 5.0 Hz). (The contacts will turn ON below L4-01.)

There is hysteresis in frequency detection 2 (i.e., a frequency detection width, L4-02 = 2.0 Hz). Change the setting to approximately 0.5 Hz if there are drops during stop. Do not use the multi-function contact output run signal (H2-01 = 0) for the brake ON/OFF signal.

◆ If the Motor Overheats

Take the following steps if the motor overheats.

■The load is too big.

If the motor load is too heavy and the motor is used with the effective torque exceeding the motor's rated torque, the motor will overheat. Some motor rating are given for short period performance and are not continuous ratings. Reduce the load amount by either lightening the load or lengthening the acceleration/deceleration time. Also consider increasing the motor capacity.

■The ambient temperature is too high.

The motor rating is determined within a particular ambient operating temperature range. The motor will burn out if it is run continuously at the rated torque in an environment in which the maximum ambient operating temperature is exceeded. Lower the motor's ambient temperature to within the acceptable ambient operating temperature range.

■The withstand voltage between the motor phases is insufficient.

When the motor is connected to the Drive output, a surge is generated between the Drive switching and the motor coil. Normally the maximum surge voltage is three times the Drive's input power supply voltage. Be sure to use a motor with a withstand voltage between the motor phases that is greater than the maximum surge voltage. In particular, when using a 380-380 V class Drive, use a special motor for Drives.

■Autotuning has not been performed for vector control

Vector control will not perform if autotuning has not been performed. Perform autotuning, or set the motor parameters through calculations. Alternatively, change the Control Method Selection (A1-02) to V/f control (0 or 1).

◆ If There is Noise When the Drive is Started or From an AM Radio

If noise is generated by Drive switching, implement the following countermeasures:

- Change the Drive's Carrier Frequency Selection (C6-02) to lower the carrier frequency. This will help to some extent by reducing the amount of internal switching.
- Install an Input Noise Filter at the Drive's power supply input area.
- Install an Output Noise Filter at the Drive's power supply output area.
- Use metal tubing. Electric waves can be shielded by metal, so encase the Drive with metal (steel).
- Ground the Drive and motor.
- Separate main circuit wiring from control wiring.

◆ If the Ground Fault Interrupter Operates When the Drive is Run

The Drive performs internal switching, so there is a certain amount of leakage current. This may cause the ground fault interrupter to operate and cut off the power supply. Change to a ground fault interrupter with a high leakage detection level (i.e., a sensitivity current of 200 mA or greater per Unit, with an operating time of 0.1 s or more), or one that incorporates high frequency countermeasures (i.e., one designed for use with Drives). It will also help to some extent to change the Drive's Carrier Frequency Selection (C6-02) to lower the carrier frequency. In addition, remember that the leakage current increases as the cable is lengthened.

◆ If There is Mechanical Oscillation

Use the following information when there is mechanical oscillation.

■The machinery is making unusual sounds.

The following causes are possible.

There may be resonance between the mechanical system's characteristic frequency and the carrier frequency.

If the motor is running with no problems and the machinery is oscillating with a high-pitched whine, it may indicate that this is occurring. To prevent this type of resonance, adjust the carrier frequency with parameters C6-02 to C6-05.

There may be resonance between a machine's characteristic frequency and the output frequency of the Drive.

To prevent this from occurring, either use the jump frequency functions in parameters d3-01 to d3-04 or install rubber padding on the motor base to reduce oscillation.

■Oscillation and hunting are occurring with open-loop vector control 1.

The gain adjustment may be insufficient. Reset the gain to a more effective level by adjusting parameters C4-02 (torque compensation time parameter), C2-01 (S-curve Characteristic Time at Acceleration Start), and C3-02 (Slip Compensation Primary Delay Time) in order. Lower the gain setting and raise the primary delay time setting.

Vector control will not perform if autotuning has not been performed. Perform autotuning separately for the motor, or set the motor parameters through calculations. Alternatively, change the control method selection (A1-02) to V/f control (0 or 1).

■Oscillation and hunting are occurring with V/f control.

The gain adjustment may be insufficient. Reset the gain to a more effective level by adjusting parameters C4-02 (Torque Compensation Primary Delay Time Constant), n1-02 (Hunting Prevention Gain), and C3-02 (Slip Compensation Primary Delay Time) in order. Lower the gain setting and raise the primary delay time setting.

■Oscillation and hunting are occurring with V/f w/PG control.

The gain adjustment may be insufficient. Adjust the various types of speed control loop (ASR) gain.

If the oscillation cannot be eliminated in this way, set the hunting prevention selection (parameter n1-01) to 0 (disabled) and then try adjusting the gain again.

■Oscillation and hunting are occurring with flux vector control.

The gain adjustment is insufficient. Adjust the various gains for speed control (ASR). If the oscillation points overlap with those of the machine and cannot be eliminated, increase the primary delay time constant for speed control (ASR) in C5-06 and then readjust the gains.

If autotuning is not performed, proper performance cannot be achieved for vector control. Perform autotuning or set the motor parameters according to calculations.

■Oscillation and hunting are occurring with PID control.

If there is oscillation or hunting during PID control, check the oscillation cycle and individually adjust P, I, and D parameters. (Refer to page 6-102.)

■Autotuning has not been performed with vector control.

Vector control will not perform if autotuning has not been performed. Perform autotuning separately for the motor, or set the motor parameters through calculations. Alternatively, change the Control Method Selection (A1-02) to V/f control.

◆ If the Motor Rotates Even When Drive Output is Stopped

If the motor rotates even when the Drive output is stopped, the DC injection braking is insufficient. If the motor continues operating at low speed, without completely stopping, and after a deceleration stop has been executed, it means that the DC injection braking is not decelerating enough. Adjust the DC injection braking as follows:

- Increase the parameter b2-02 (DC Injection Braking Current) setting.
- Increase the parameter b2-04 (DC Injection Braking (initial excitation) Time at Stop) setting.

◆ If 0 V is Detected When the Fan is Started, or Fan Stalls

Generation of 0 V (main circuit voltage) and stalling can occur if the fan is turning when it is started. The DC injection braking is insufficient when starting.

This can be prevented by slowing fan rotation by DC injection braking before starting the fan. Increase the parameter b2-03 (DC injection braking time (initial excitation) at start) setting.

◆ If Output Frequency Does Not Rise to Frequency Reference

Use the following information if the output frequency does not rise to the frequency reference.

■The frequency reference is within the jump frequency range.

When the jump frequency function is used, the output frequency does not change within the jump frequency range. Check to be sure that the Jump Frequency (parameters d3-01 to d3-03) and Jump Frequency Width (parameter d3-04) settings are suitable.

■The frequency reference upper limit has been reached.

The output frequency upper limit is determined by the following formula:
Maximum Output Frequency (E1-04) × Frequency Reference Upper Limit (d2-01) / 100
Check to be sure that the parameter E1-04 and d2-01 settings are suitable.

8

Maintenance and Inspection

This chapter describes basic maintenance and inspection for the Drive.

Maintenance and Inspection 8-2

Maintenance and Inspection

◆ Outline of Maintenance

The maintenance period of the Drive is as follows:

Maintenance Period: Within 18 months of shipping from the factory or within 12 months of being delivered to the final user, whichever comes first.

◆ Daily Inspection

Check the following items with the system in operation.

- The motor should not be vibrating or making unusual noises.
- There should be no abnormal heat generation.
- The ambient temperature should not be too high.
- The output current value shown on the monitor displays should not be higher than normal.
- The cooling fan on the bottom of the Drive should be operating normally.

◆ Periodic Inspection

Check the following items during periodic maintenance.

Always turn OFF the power supply before beginning inspection. Confirm that the LCD and LED indicators on the front cover have all turned OFF, and then wait until at least five minutes has elapsed before beginning the inspection. Be sure not to touch terminals right after the power has been turned off. Doing so can result in electric shock.

Table 8.1 Periodic Inspections

Item	Inspection	Corrective Procedure
External terminals, mounting bolts, connectors, etc.	Are all screws and bolts tight?	Tighten loose screws and bolts firmly.
	Are connectors tight?	Reconnect the loose connectors.
Cooling fins	Are the fins dirty or dusty?	Clean off any dirt and dust with an air gun using dry air at a pressure of 39.2 x 10^4 to 58.8 x 10^4 Pa (4 to 6 kg•cm^2).
PCBs	Is there any conductive dirt or oil mist on the PCBs?	Clean off any dirt and dust with an air gun using dry air at a pressure of 39.2 x 10^4 to 58.8 x 10^4 Pa (4 to 6 kg•cm^2). Replace the boards if they cannot be made clean.
Cooling fan	Is there any abnormal noise or vibration or has the total operating time exceeded 20,000 hours?	Replace the cooling fan.
Power elements	Is there any conductive dirt or oil mist on the elements?	Clean off any dirt and dust with an air gun using dry air at a pressure of 39.2 x 10^4 to 58.8 x 10^4 Pa (4 to 6 kg•cm^2).
Smoothing capacitor	Are there any irregularities, such as discoloration or odor?	Replace the capacitor or Drive.

◆ Periodic Maintenance of Parts

The Drive is configured of many parts, and these parts must be operating properly in order to make full use of the Drive functions.

Among the electronic components, there are some that require maintenance depending on their usage conditions. In order to keep the Drive operating normally over a long period of time, it is necessary to perform period inspections and replace parts according to their service life.

Periodic inspection standards vary depending the Drive's installation environment and usage conditions. The Drive's maintenance periods are noted below. Keep them as reference.

Table 8.2 Part Replacement Guidelines

Part	Standard Replacement Period	Replacement Method
Cooling fan	2 to 3 years	Replace with new part.
Smoothing capacitor	5 years	Replace with new part. (Determine need by inspection.)
Breaker relays	-	Determine need by inspection.
Fuses	10 years	Replace with new part.
Aluminum capacitors on PCBs	5 years	Replace with new board. (Determine need by inspection.)

Note The standard replacement period is based on the following usage conditions:
Ambient temperature:Yearly average of 30°C
Load factor: 80% max.
Operating rate: 12 hours max. per day

◆ Cooling Fan Replacement Outline

■200-240 V and 380-480 V Class Drives of 15 kW or Less

A cooling fan is attached to the bottom of the Drive.

If the Drive is installed using the mounting holes on the back of the Drive, the cooling fan can be replaced without removing the Drive from the installation panel.

Removing the Cooling Fan

1. Press in on the right and left sides of the fan cover in the direction of arrows 1 and when pull the fan out in the direction of arrow 2.
2. Pull out the cable connected to the fan from the fan cover and disconnect the relay connector.
3. Open the fan cover on the left and right sides and remove the fan cover from the fan.

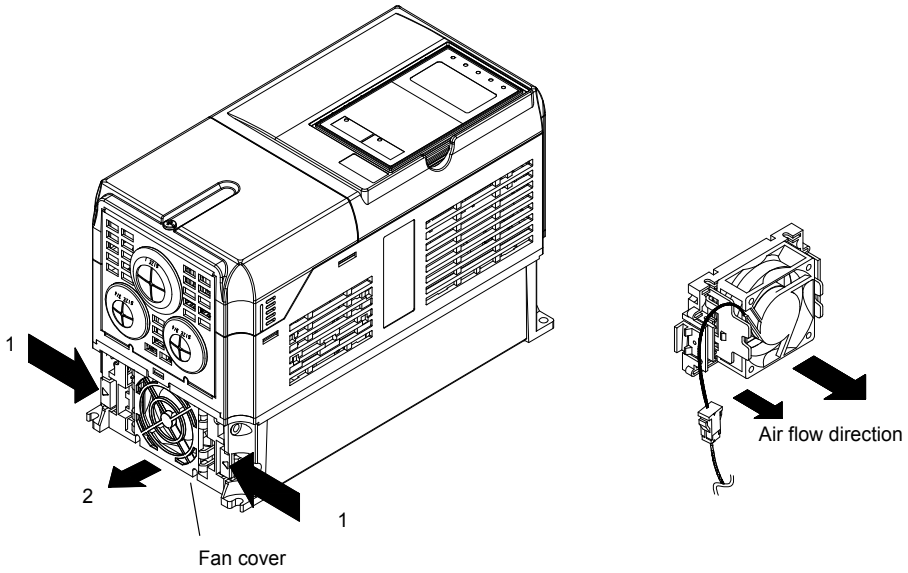

Fig 8.1 Cooling Fan Replacement (Drives of 15 kW or Less)

Mounting the Cooling Fan

1. Attach the fan cover to the cooling fan. Be sure that the air flow direction indicated by the arrows above faces into the Drive.
2. Connect the relay connector securely and place the relay connector and cable into the fan cover.
3. Mount the fan cover on the Drive. Be sure that the tabs on the sides of the fan cover click into place on the Drive.

■200-240 V and 380-480 V Class Drives of 18.5 kW or More

A cooling fan is attached to the top panel inside the Drive.

The cooling fan can be replaced without removing the Drive from the installation panel.

Removing the Cooling Fan

1. Remove the terminal cover, Drive cover, Digital Operator, and front cover from the front of the Drive.
2. Remove the controller bracket to which the cards are mounted. Remove all cables connected to the controller.
3. Remove the cooling fan power cable connector (CN26 and CN27) from the gate driver positioned at the back of the controller.
4. Remove the fan cover screws and pull out the fan cover from the Drive.
5. Remove the cooling fan from the fan cover.

Mounting the Cooling Fan

After attaching a new cooling fan, reverse the above procedure to attach all of the components.
When attaching the cooling fan to the mounting bracket, be sure that the air flow faces the top of the Drive.

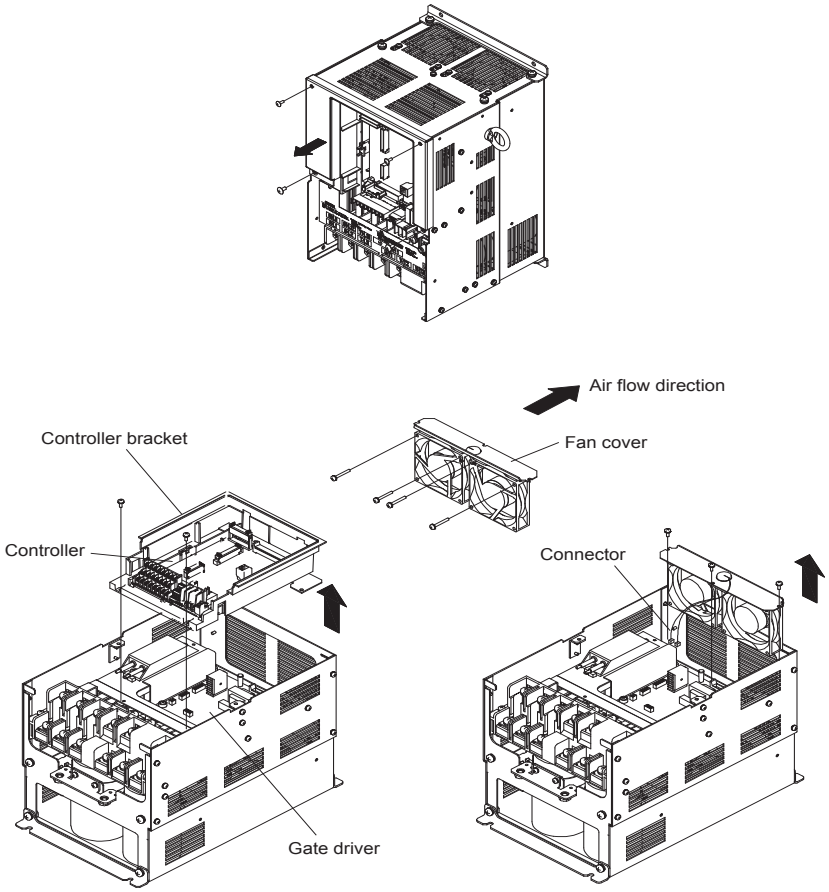

Fig 8.2 Cooling Fan Replacement (Drives of 18.5 kW or More)

◆ Removing and Mounting the Control Circuit Terminal Card

The control circuit terminal card can be removed and mounted without disconnecting the cables.

IMPORTANT

Always confirm that the charge indicator is not lit before removing or mounting the control circuit terminal card.

■Removing the Control Circuit Terminal Card

1. Remove the Digital Operator and front cover.
2. Remove the connecting line connectors connected to FE and NC on the control circuit terminal card.
3. Loosen the mounting screws (1) on the left and right sides of the control terminals until they are free. (It is not necessary to remove these screws completely. They are self-rising.)
4. Pull the terminal card out sideways (in direction 2) with the screws sticking out from the card.

■Mounting the Control Circuit Terminal Card

Reverse the removal procedure to mount the terminal card.

Confirm that the terminal circuit card and the controller properly meet at connector CN5 before pressing in on the card.

The connector pins may be bent if the card is forced into place, possibly preventing correct Drive operation.

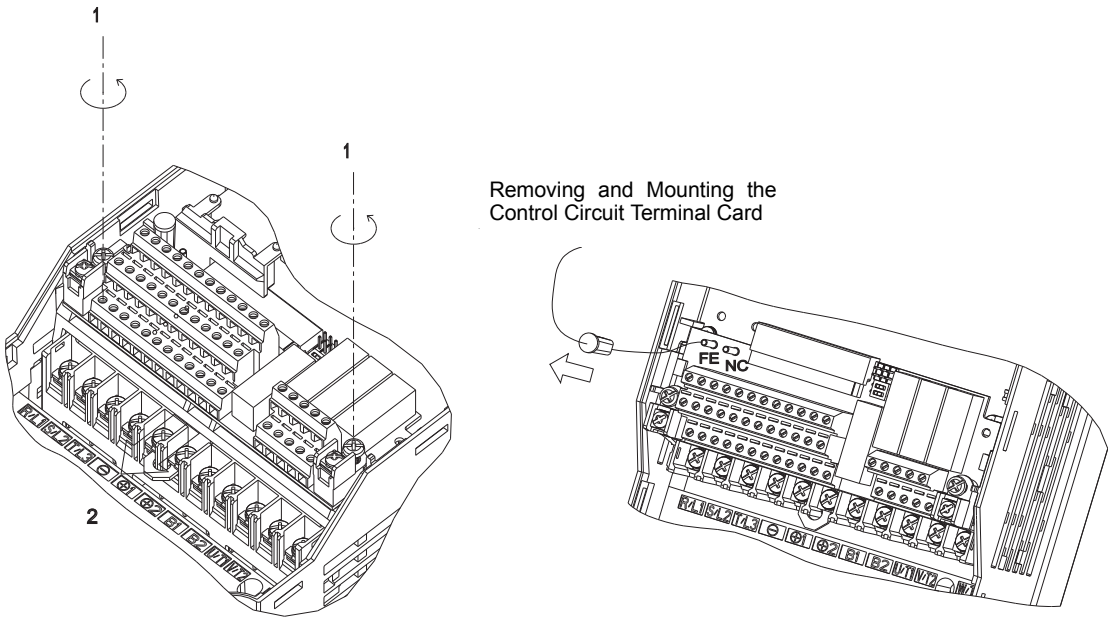

Fig 8.3 Removing the Control Circuit Terminal Card

9

Specifications

This chapter describes the basic specifications of the Drive and specifications for options and peripheral devices.

Standard Drive Specifications 9-2
Specifications of Options and Peripheral Devices 9-5

Standard Drive Specifications

The standard Drive specifications are listed by capacity in the following tables.

◆ Specifications by Model

Specifications are given by model in the following tables.

■200-240V Class

Table 9.1 200-240 V Class Drives

Model Number CIMR-G7U □			20P4	20P7	21P5	22P2	23P7	25P5	27P5	2011	2015	2018	2022	2030	2037	2045	2055	2075	2090	2110
Max. applicable motor output (kW)			0.4	0.75	1.5	2.2	3.7	5.5	7.5	11	15	18.5	22	30	37	45	55	75	90	110
Output ratings	Rated output capacity (kVA)		1.2	2.3	3.0	4.6	6.9	10	13	19	25	30	37	50	61	70	85	110	140	160
	Rated output current (A)		3.2	6	8	12	18	27	34	49	66	80	96	130	160	183	224	300	358	415
	Max. output voltage (V)		3-phase; 200, 208, 220, 230, or 240 Vac (Proportional to input voltage.)																	
	Max. output frequency (Hz)		Frequencies supported up to 400 Hz using parameter setting																	
Power supply characteristics	Rated voltage (V) Rated frequency (Hz)		3-phase, 200/208/220/230/240 Vac, 50/60 Hz*2																	
	Allowable voltage fluctuation		+ 10%, - 15%																	
	Allowable frequency fluctuation		±5%																	
Measures for power supply harmonics	DClink choke		Optional									Built in								
	12-phase rectification		Not possible									Possible*3								

* 1. The maximum applicable motor output is given for a standard 4-pole Yaskawa motor. When selecting the actual motor and Drive, be sure that the Drive's rated current is applicable for the motor's rated current.

* 2. The voltage of the cooling fan for 200-240 V Class Drives of 30 kW is three-phase, 200, 208, or 220 V at 50 Hz or 200, 208, 220, or 230 V at 60 Hz.

* 3. A 3-wire transformer is required on the power supply for 12-phase rectification.

■380-480 V Class

Table 9.2 380-480 V Class Drives

Model Number CIMR-G7U □			40P4	40P7	41P5	42P2	43P7	44P0	45P5	47P5	4011	4015	4018
Max. applicable motor output (kW) *1			0.4	0.75	1.5	2.2	3.7	4.0	5.5	7.5	11	15	18.5
Output ratings	Rated output capacity (kVA)		1.4	2.6	3.7	4.7	6.9	8.4	11	16	21	26	32
	Rated output current (A)		1.8	3.4	4.8	6.2	9	11	15	21	27	34	42
	Max. output voltage (V)		3-phase; 380, 400, 415, 440, 460, or 480 Vac (Proportional to input voltage.)										
	Max. output frequency (Hz)		Frequencies supported up to 400 Hz using parameter setting										
Power supply characteristics	Rated voltage (V) Rated frequency (Hz)		3-phase, 380, 400, 415, 440, 460 or 480 Vac, 50/60 Hz										
	Allowable voltage fluctuation		+ 10%, - 15%										
	Allowable frequency fluctuation		±5%										
Measures for power supply harmonics	DC link choke		Optional										Built in
	12-phase rectification		Not possible										Possible*2

Model Number CIMR-G7U □			4022	4030	4037	4045	4055	4075	4090	4110	4132	4160	4185	4220	4300
Max. applicable motor output (kW)*1			22	30	37	45	55	75	90	110	132	160	185	220	300
Output ratings	Rated output capacity (kVA)		40	50	61	74	98	130	150	180	210	230	280	340	460
	Rated output current (A)		52	65	80	97	128	165	195	240	270	302	370	450	605
	Max. output voltage (V)		3-phase, 380, 400, 415, 440, 460, or 480 Vac (Proportional to input voltage.)												
	Max. output frequency (Hz)		Frequencies supported up to 400 Hz using parameter setting												
Power supply characteristics	Max. voltage (V) Rated frequency (Hz)		3-phase, 380, 400, 415, 440, 460, or 480 Vac, 50/60 Hz												
	Allowable voltage fluctuation		+ 10%, - 15%												
	Allowable frequency fluctuation		±5%												
Measures for power supply harmonics	DC link choke		Built in												
	12-phase rectification		Possible*2												

* 1. The maximum applicable motor output is given for a standard 4-pole Yaskawa motor. When selecting the actual motor and Drive, be sure that the Drive's rated current is applicable for the motor's rated current.

* 2. A 3-wire transformer (optional) is required on the power supply for 12-phase rectification.

◆ Common Specifications

The following specifications apply to both 200-240 V and 380-480 V Class Drives.

Table 9.3 Common Specifications

Model Number CIMR-G7U □		Specification
Control characteristics	Control method	Sine wave PWM Flux vector control, open-loop vector control 1 or 2, V/f control without PG, V/f control with PG (switched by parameter setting)
	Torque characteristics	150%/0.3 Hz (Open-loop vector control 2), 150%/0 min^{-1} (Flux vector control)*1
	Speed control range	1:200 (Open-loop vector control 2), 1:1000 (Flux vector control)*1
	Speed control accuracy	±0.2% (Open-loop vector control, 25°C ± 10°C), ±0.02% (Flux vector control, 25°C ± 10°C)
	Speed control response	10 Hz (Open-loop vector control 2), 30 Hz (Flux vector control)
	Torque limits	Provided for vector control only (4 quadrant steps can be changed by parameter settings.)
	Torque accuracy	±5%
	Frequency control range	0.01 to 400 Hz*3
	Frequency accuracy (temperature characteristics)	Digital references: ± 0.01% (-10°C to +40°C)
		Analog references: ±0.1% (25°C ±10°C)
	Frequency setting resolution	Digital references: 0.01 Hz, Analog references: 0.03 Hz/60 Hz (11 bit with no sign)
	Output frequency resolution	0.001 Hz
	Overload capacity and maximum current*2	150% of rated output current per minute, 200% for 5 s
	Frequency setting signal	-10 to 10 V, 0 to 10 V, 4 to 20 mA, pulse train
	Acceleration/Deceleration time	0.01 to 6000.0 s (4 selectable combinations of independent acceleration and deceleration settings)
	Braking torque	Approximately 20% (Approximately 125% with Braking Resistor option, braking transformer built into 200-240 V and 380-480 V Class Drives for 15 kW or less.)*2
	Main control functions	Restarting for momentary power loss, speed searches, overtorque detection, torque limits, 17-speed control (maximum), acceleration/deceleration time changes, S-curve acceleration/deceleration, 3-wire sequence, autotuning (rotational or stationary), dwell functions, cooling fan ON/OFF control, slip compensation, torque compensation, jump frequencies, upper and lower limits for frequency references, DC braking for starting and stopping, high-slip braking, PID control (with sleep function), energy-saving control, MODBUS communications (RS-485/422, 19.2 kbps maximum), fault reset, function copying, droop control, torque control, speed/torque control switching, etc.
Protective functions	Motor protection	UL recognized protection by electronic thermal overload relay.
	Instantaneous overcurrent protection	Stops at approx. 200% of rated output current.
	Fuse blown protection	Stops for fuse blown.
	Overload protection	150% of rated output current per minute, 200% for 5 s
	Overvoltage protection	200-240 Class Drive: Stops when main-circuit DC voltage is above 410 V. 380-480 Class Drive: Stops when main-circuit DC voltage is above 820 V.
	Undervoltage protection	200-240 Class Drive: Stops when main-circuit DC voltage is below 190 V. 380-480 Class Drive: Stops when main-circuit DC voltage is below 380 V.
	Momentary power loss ridethrough	Stops for 15ms or more. By selecting the momentary power loss method, operation can be continued if power is restored within 2 s.
	Cooling fin overheating	Protection by thermistor.
	Stall prevention	Stall prevention during acceleration, deceleration, or running.
	Grounding protection	Protection by electronic circuits.
	Charge indicator	Lit when the main circuit DC voltage is approx. 50 V or more.
Environment	Ambient operating temperature	-10°C to 40°C (Enclosed wall-mounted type) 10°C to 45°C (Open chassis type)
	Ambient operating humidity	95% max. (with no condensation)
	Storage temperature	- 20°C to + 60°C (short-term temperature during transportation)
	Application site	Indoor (no corrosive gas, dust, etc.)
	Altitude	1000 m max.
	Vibration	Tolerance for vibration frequency less than 20 Hz, 9.8 m/s^2 max.; 20 to 50 Hz, 2 m/s^2 max

* 1. Rotational autotuning must be performed to ensure obtaining the specifications given for flux vector control and open-loop vector control 1 and 2.

* 2. When connecting a Braking Resistor or Braking Resistor Unit, set L3-04 (Stall prevention selection during deceleration) to 0 (disabled). Stopping may not be possible in the specified deceleration time if this function is not disabled.

* 3. The maximum output frequency for open-loop vector control 2 is 60 Hz.

Specifications of Options and Peripheral Devices

The following options and peripheral devices can be used for the Drive. Select them according to the application.

Table 9.4 Options and Peripheral Devices

Purpose	Name	Model (Code)	Descriptions
Protect Drive wiring	MCCB or Ground Fault Interrupter*1	NF□	Always connect a breaker to the power supply line to protect Drive wiring. Use a ground fault interrupter suitable for high frequencies.
Prevents burning when a Braking Resistor is used.	Magnetic Contactor	HI-□J	Install to prevent the braking resistor from burning out when one is used. Always attach a surge absorber to the coil.
Contains switching surge	Surge Absorber	DCR2-□	Absorbs surge from the magnetic contactor and control relays. Connect surge absorbers to all magnetic contactors and relays near the Drive.
Isolates I/O signals	Isolator	DGP□	Isolates the I/O signals of the Drive and is effective against inductive noise.
Improve the input power factor of the Drive	DC Reactor AC Reactor	UZDA-□ UZBA-□	Used to improve the input power factor of the Drive. All Drives of 18.5 kW or higher contain built-in DC reactors. These are optional for Drives of 15 kW or less. Install DC and AC reactors for applications with a large power supply capacity (600 kVA or higher).
Reduce the affects of radio and control device noise	Input Noise Filter	(Single phase) LNFB-□ (3 phase) LNFD-□HF□	Reduces noise coming into the Drive from the power supply line and to reduce noise flowing from the Drive into the power supply line. Connect as close to the Drive as possible.
	Finemet zero-phase reactor to reduce radio noise*2	F6045GB (FIL001098) F11080GB (FIL001097)	Reduces noise from the line that sneaks into the Drive input power system. Insert as close to the Drive as possible. Can be use on both the input side and output side.
	Output Noise Filter	LF-o	Reduces noise generated by the Drive. Connect as close to the Drive as possible.
Enable stopping the machine in a set time	Braking Resistor	ERF-150WJ□□ (R00□□□□)	Consumes the regenerative motor energy with a resistor to reduce deceleration time (use rate: 3% ED).
	Braking Resistor Unit	LKEB-□ (75600-K□□□0)	Consumes the regenerative motor energy with a resistor to reduce deceleration time (use rate: 10% ED).
	Braking Unit	CDBR-□ (72600-R□□□0)	Used with a Braking Resistor Unit to reduce the deceleration time of the motor.
Operates the Drive externally	VS Operator (small plastic Operator)	JVOP-95•□ (73041-0905X-□)	Allows frequency reference settings and ON/OFF operation control to be performed by analog references from a remote location (50 m max.). Frequency counter specifications: 60/120 Hz, 90/180Hz
	VS Operator (Standard steel-plate Operator)	JVOP-96•□ (73041-0906X-□)	Allows frequency reference settings and ON/OFF operation control to be performed by analog references from a remote location (50 m max.). Frequency counter specifications: 75 Hz, 150 Hz, 220 Hz
	Digital Operator Connection Cable	1 m cable: (72606-WV001) 3 m cable: (72606-WV003)	Extension cable to use a Digital Operator remotely. Cable length: 1 m or 3 m
Controls Drive system	VS System Module	JGSM-□	A system controller that can be match to the automatic control system to produce an optimum system configuration.
Provides Drive momentary power loss recovery time	Momentary Power Loss Recovery Unit	P00□0 (73600-P00□0)	Handles momentary power losses for the control power supply for models 2.2 kW or less (maintains power for 2 s).
Set/monitor frequencies and voltages externally.	Frequency Meter	DCF-6A	Devices to set or monitor frequencies externally.
	Frequency Setter	RV30YN20S (2 kΩ)	
	Frequency Setter Knob	CM-3S	
	Output Voltmeter	SCF-12NH	Measures the output voltage externally and designed for use with a PWM Drive.
Correct frequency reference input, frequency meter, ammeter scales	Variable Resistor Board for Frequency Reference	2 kΩ (ETX003270) 20 kΩ (ETX003120)	Connected to the control circuit terminals to input a frequency reference.
	Frequency Meter Scale Correction Resistor	(RH000850)	Calibrates the scale of frequency meters and ammeters.

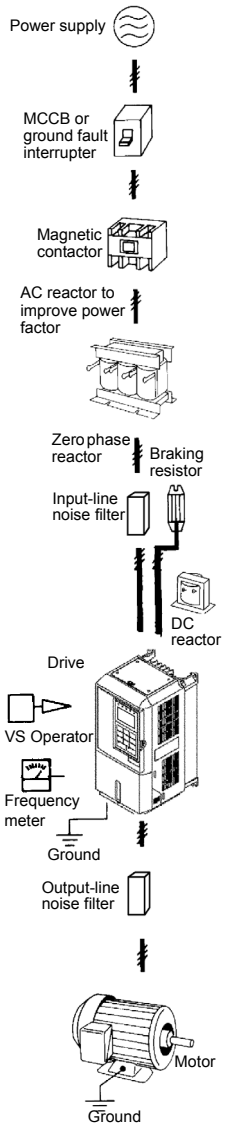

* 1. Use a ground fault interrupter with a current sensitivity of 200 mA minimum and an operating time of 0.1 s minimum to prevent operating errors. The interrupter must be suitable for high-frequency operation.
Example: NV series by Mitsubishi Electric Corporation (manufactured in or after 1988)
EG, SG series by Fuji Electric Co., Ltd. (manufactured in or after 1984)

* 2. The finement zero-phase reactor is manufactured by Hitachi Metals.

The following Option Cards are available

Table 9.5 Option Cards

Type		Name	Code Number	Function	Document Number
Built-in (connect to connector)	Speed (Frequency) Reference Option Cards	Analog Reference Card AI-14U	73600-C001X	Enables high-precision, high-resolution setting of analog speed references. • Input signal ranges: 0 to 10 V (20 kΩ), 1 channel 4 to 20 mA (250 Ω), 1 channel • Input resolution: 14-bit (1/16384)	-
		Analog Reference Card AI-14B	73600-C002X	Enables high-precision, high-resolution setting of analog speed references. • Input signal ranges: 0 to ±10 V (20 kΩ) 4 to 20 mA (500 Ω), 3 channels • Input resolution: 13-bit + sign (1/8192)	-
		Digital Reference Card DI-08	73600-C003X	Enables 8-bit digital setting of speed references. • Input signal: 8-bit binary 2-digit BCD + sign signal + set signal • Input voltage: +24 V (isolated) • Input current: 8 mA	-
		Digital Reference Card DI-16H2	73600-C016X	Enables 16-bit digital setting of speed references. • Input signal: 16-bit binary 4-digit BCD + sign signal + set signal • Input voltage: +24 V (isolated) • Input current: 8 mA With 16-bit/12-bit switch.	-
	Monitoring Optional Cards	Analog Monitor Card AO-08	73600-D001X	Converts analog signals to monitor the Drive's output status (output frequency, output current, etc.) to absolute values and outputs them. • Output resolution: 8 bits (1/256) • Output voltage: 0 to +10 V (not insulated) • Output channels: 2 channels	-
		Analog Monitor Card AO-12	73600-D002X	Output analog signals to monitor the Drive's output status (output frequency, output current, etc.). • Output resolution: 11 bits (1/2048) + sign • Output voltage: -10 to +10 V (not insulated) • Output channels: 2 channels	-
		Digital Output Card DO−08	73600-D004X	Outputs isolated digital signals to monitor the Drives operating status (alarm signals, zero speed detection, etc.) Output form: Photocoupler output, 6 channels (48 V, 50 mA max.) Relay contact outputs, 2 channels (250 Vac: 1 A max., 30Vdc: 1 A max.)	-
		2C-Relay Output Card DO−02C	73600-D007X	Provides two multi-function outputs (DPDT relay contacts) in addition to those provided by the Drive.	-

Table 9.5 Option Cards (Continued)

Type		Name	Code Number	Function	Document Number
Built-in (connect to connector)	PG Speed Control Cards	PG−A2	73600-A012X	Used for V/f with PG control. Speed feedback is performed using the PG attached to the motor to compensate for speed fluctuations caused by slipping. • A-phase pulse (single pulse) input (voltage, complementary, open-collector input) • Maximum input frequency: 32767 Hz • Pulse monitor output: +12 V, 20 mA (PG power supply output: +12 V, 200 mA max.)	-
		PG−B2	73600-A013X	• Used for V/f control. • A-, B-phase input (complimentary input) • Maximum input frequency: 32767 Hz • Pulse monitor output: Open-collector (PG power supply output: +12 V, 200 mA max.)	-
		PG−D2	73600-A014X	• Differential input. • A-phase pulse (differential pulse) input, for V/f control • Maximum input frequency: 300 kHz • Input: Conforms to RS-422 • Pulse monitor output: RS-422 (PG power supply output: +5 or +12 V, 200 mA max.)	-
		PG-X2	73600-A015X	• A-, B-, Z-phase pulse (differential pulse) input • Maximum input frequency: 300 kHz • Input: Conforms to RS-422 • Pulse monitor output: RS-422 (PG power supply output: +5 or +12 V, 200 mA max.)	-

Table 9.5 Option Cards (Continued)

Type		Name	Code Number	Function	Document Number
Built-in (connected to connector)	Communications Option Cards	DeviceNet Communications Interface Card SI-N	73600-C021X	Used to communicate with Drive from a host computer using DeviceNet communications to start/stop Drive operation, read/set parameters, and read/set monitor parameters (output frequencies, output currents, etc.).	-
		ProfiBus-DP Communications Interface Card SI-P	73600-C022X	Used to communicate with Drive from a host computer using ProfiBus-DP communications to start/stop Drive operation, read/set parameters, and read/set monitor parameters (output frequencies, output currents, etc.).	-
		InterBus-S Communications Interface Card SI-R	*	Used to communicate with Drive from a host computer using InterBus-S communications to start/stop Drive operation, read/set parameters, and read/set monitor parameters (output frequencies, output currents, etc.).	-
		CANopen Communications Interface Card SI-S	*	Used to communicate with Drive from a host computer using CANopen communications to start/stop Drive operation, read/set parameters, and read/set monitor parameters (output frequencies, output currents, etc.).	-
		ControlNet Communications Interface Card SI-U	*	Used to communicate with Drive from a host computer using ControlNet communications to start/stop Drive operation, read/set parameters, and read/set monitor parameters (output frequencies, output currents, etc.).	-
		CC-Link Communications Interface Card SI-C	73600-C032X	Used to communicate with Drive from a host computer using CC-Link communications to start/stop Drive operation, read/set parameters, and read/set monitor parameters (output frequencies, output currents, etc.).	-

* Under development.

10

Appendix

This chapter provides precautions for the Drive, motor, and peripheral devices and also provides lists of parameters.

Varispeed G7 Control Modes 10-2

Drive Application Precautions 10-7

Motor Application Precautions 10-10

Conformance to UL and CE Markings 10-12

User Parameters 10-20

Varispeed G7 Control Modes

Details of the Varispeed G7-Series Drive control modes and their features are provided in this section.

◆ Control Modes and Features

Varispeed G7-Series Drives support the following five control modes, allowing the selection of a control mode to suit the required purpose. *Table 10.1* provides an overview of the control modes and their features.

Table 10.1 Overview and Features of Control Modes

Control Mode		V/f Control without PG	V/f Control with PG	Open-loop Vector Control 1	Flux Vector Control	Open-loop Vector Control 2
Parameter Setting		A1-02 = 0	A1-02 = 1	A1-02 = 2 (factory setting)	A1-02 = 3	A1-02 = 4
Basic Control		Voltage/frequency fixed ratio control	Voltage/frequency fixed ratio control with speed compensation using a PG	Current vector control without a PG	Current vector control with a PG	Current vector control without a PG using a high-performance magnetic flux and speed estimator (software)
Main Applications		Variable speed control, particularly for control of multiple motors with a single Drive and for replacing existing Drives	Applications requiring high-precision speed control using a PG on the machine side	Variable speed control, applications requiring high performance without a PG on the motor side, and for replacing open-loop vector control of the previous VS-616G5.	Very high-performance control with a PG on the motor side (simple servodrives, high-precision speed control, torque control, and torque limiting)	Very high-performance control without a PG on the motor side (such as simple servodrives, torque control, and torque limiting), and function applications between flux vector and open-loop vector 1 control.
PG Speed Control Card (Option)		Not required.	Required (PG-A2 or PG-D2).	Not required.	Required (PG-B2 or PG-X2).	Not required.
Basic Performance	Speed Control Range*1	1:40	1:40	1:100	1:1000	1:200*13
	Speed Control Accuracy*2	±2 to 3%	±0.03%	±0.2%	±0.02%	±0.2%
	Speed Response*3	Approx. 1 Hz	Approx. 1 Hz	5 Hz	40 Hz	10 Hz
	Maximum Output Frequency	400 Hz	400 Hz	400 Hz	400 Hz	60 Hz*13
	Starting Torque*4	150%/3 Hz	150%/3 Hz	150%/1 Hz	150%/0 min^{-1}	150%/0.3 Hz
Application Functions	Autotuning	Line-to-line resistance (Normally not required.)	Line-to-line resistance (Normally not required.)	Rotational autotuning, stationary autotuning, stationary autotuning for line-to-line resistance only	Rotational autotuning, stationary autotuning, sta5 ionary autotuning for line-to-line resistance only	Rotational autotuning, stationary autotuning, stationary autotuning for line-to-line resistance only

Table 10.1 Overview and Features of Control Modes

Control Mode		V/f Control without PG	V/f Control with PG	Open-loop Vector Control 1	Flux Vector Control	Open-loop Vector Control 2
Application Functions (Cont.)	Torque Limiting*5	No	No	Yes (except during acceleration/deceleration, below minimum frequency, or during reverse rotation)	Yes	Yes (except below minimum frequency and during reverse rotation)
	Torque Control*6	No	No	No	Yes	Yes (except below minimum frequency and during reverse rotation)
	Droop Control*7	No	No	No	Yes (except for 0 min^{-1} and during reverse rotation)	Yes (Except below minimum frequency and during reverse rotation)
	Zero-servo Control*8	No	No	No	Yes	No
	Speed Estimation (Detection) Instantaneous Speed Search*9	Yes (speed and rotation direction estimation)	Yes (speed detection and rotation direction estimation)	Yes (speed and rotation direction estimation)	Yes (speed and rotation direction detection)	Yes (speed and rotation direction estimation)
	Automatic Energy-saving Control*10	Yes	Yes	Yes	Yes	Yes
	High-slip Braking*11	Yes	Yes	(Under development)	(Under development)	(Under development)
	Feed Forward Control*12	No	No	No	Yes	Yes

* 1. The variable speed control range. (For continuous operation, the motor's temperature rise must be considered.)
* 2. The speed deviation in relation to the maximum speed with a rated load and when the load is stable. (For open-loop vector control 1 and 2, the motor temperature must be 25 °C ± 10 °C.)
* 3. The speed response guidelines indicating the extent of the motor's actual speed gain in proportion to the speed reference, which changes in a sinusoidal wave form, within a range where motor torque does not become saturated.
* 4. A guideline for the motor torque that can be generated when started at a low speed and its output frequency (rotations) at that time.
* 5. This function limits the maximum motor torque to protect the machine and the load.
* 6. This function directly controls the amount of torque being generated at the motor and its rotation direction, e.g., to control force.
* 7. This function controls the amount of motor slip that occurs to prevent mechanical shock, when replacing a torque motor, etc.
* 8. This function performs simple positioning control (servo lock), without using an external positioning control device.
* 9. This function instantaneously estimates (or detects) the speed and rotation direction of a coasting motor, and quickly starts it without subjecting it to shock.
* 10.This function automatically adjusts the voltage applied to the motor to optimize the motor's efficiency with light loads.
* 11.This function improves the deceleration time without using a braking resistor by making the motor winding absorb regenerative power. As a standard, this function is effective with a motor running on 160 kW or less with a high-inertia load.
* 12.This function enables proportional gain in relation to changes in the speed reference, even for low rigidity (corresponds to the servo's model gain control).
* 13.Set the maximum output frequency (E1-04) for open-loop vector control 2 to a value not exceeding 60 Hz. Use within a speed control range of 1:10 for torque control on the regenerative side.

■Application Function Precautions

Observe the following precautions when using the application functions.

- Perform rotational autotuning during trial operation whenever it is possible to separate the motor and machine. To achieve the characteristics of vector control described in *Table 10.1*, the control must be adjusted within a range that the machine will not vibrate after rotational autotuning has been performed.
- With vector control, the motor and Drive must be connected 1:1. Vector control is not possible when multiple motors are connected to a single Drive. Select Drive capacity so the rated motor current is 50% to 100% of the rated Drive current.
- For estimated speed searching, the motor and Drive must be connected 1:1. The speed search must be performed at a frequency of 130 Hz or less and with a motor with the same number of frames as or one frame less than the Drive capacity.
- During high-slip braking, motor loss increases, so use a high-slip braking frequency of 5% ED or less, and a braking time of 90 seconds or less. Once high-slip braking has started, the motor cannot be restarted until it has stopped.
- Feed forward control is a function that improves the proportional gain of the motor speed in relation to the change in the speed reference. Adjust the response to interference loads using the speed controller (ASR) parameters.
- The torque limit function will not operate during acceleration or deceleration (during soft start transition) when using a control mode such as open-loop vector control 1. Even if the motor speed drops due to torque limiting while set to a fixed speed, the speed will not fall below the minimum frequency and the motor will not slip into reverse rotation. These conditions also apply to open-loop vector control 2 and other application functions.

■Precautions When Using Open-loop Vector Control 2

Using open-loop vector control 2 (A1-02=4) gives a higher level of control than conventional open-loop vector control (A1-02=2). When using open-loop vector control 2, pay attention to the points listed below. For a comparison with other control modes, refer to *Table 10.1 Overview and Features of Control Modes*.

General Precautions

- The maximum possible setting for the maximum output frequency (E1-04) is 60 Hz.
- Be sure to perform autotuning. Refer to the precautions given under *Autotuning* in *Chapter 4 Trial Operation*.

Precaution on Regeneration

With speed control, in the low speed range (approx. 6 Hz max.), the speed increases for large regenerative loads, and it may not be possible to maintain speed accuracy. Examples are given below for forward rotation at frequencies of 0.3, 1, 3, 6, and 60 Hz.

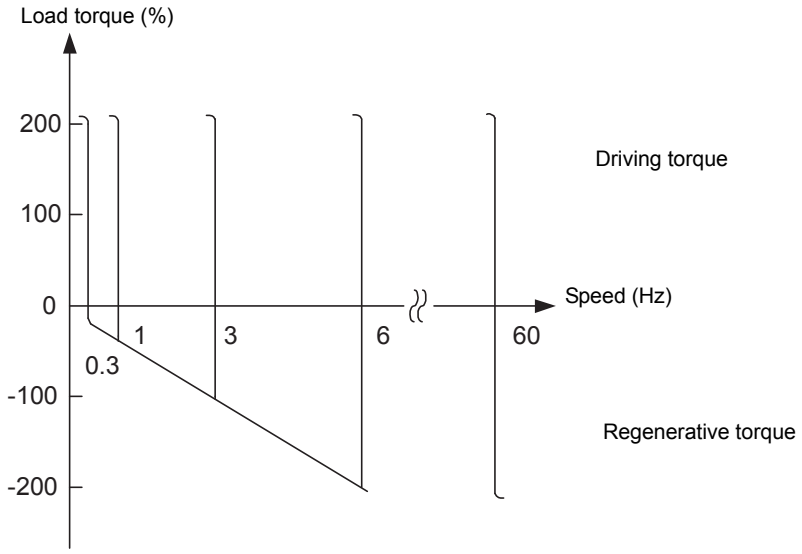

With torque control, operate within a speed control range of 1:10 on the regenerative side.

Precautions on Setting Parameters

If the parameters are not set properly, performance may be adversely affected.

- If there is a possibility of starting with the motor already rotating, enable the speed search function (b3-01=1).
- When lowering a torque limit (L7-□□), set it to as high a value as possible within the range allowed by the system.
- If torque limit acceleration is performed, or if the motor slips at the torque limit causing a CF (control fault), increase n4-08 (proportional gain of speed estimator) in steps of 5 until acceleration and deceleration are performed smoothly. When n4-08 is increased, the torque reference (U1-09) may oscillate. If so, increase C5-06 (ASR primary delay time) by about 0.050 s.

Precaution on Torque Accuracy

To ensure torque accuracy within the speed control range of 1:10 when the motor is operated by itself at the minimum frequency and the torque reference (U1-09) is higher than in the medium- and high-speed ranges, increase the setting of the torque adjustment gain (n4-17) and adjust the torque reference so that it is about the same as that in the medium and high speed ranges.

◆ Control Modes and Applications

■V/f Control without PG (A1-02 = 0)

V/f control without a PG is suitable for applications where multiple motors are operated with a single Drive, such as with multi-motor drives.

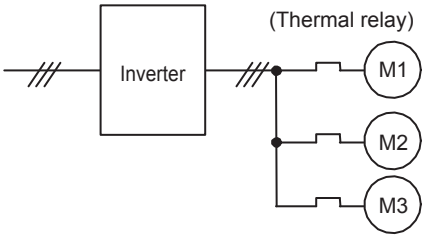

Fig 10.1

■V/f Control with PG (A1-02 = 1)

V/f control with a PG enables precise control of machine line speed. Speed control using the speed feedback of the machine shaft is possible in this mode.

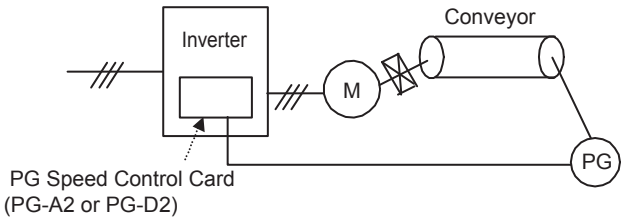

Fig 10.2

■Flux Vector Control (A1-02 = 2 or 4)

Flux vector control enables the use of high-performance drives without a speed detector. PG (pulse generator) wiring is not required.

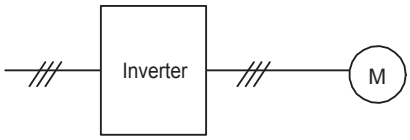

Fig 10.3

■Vector Control with PG (A1-02 = 3)

Vector control with a PG is suitable for applications using high-precision drives with PG feedback. High-precision positioning, zero-speed control, and torque control are possible with this mode.

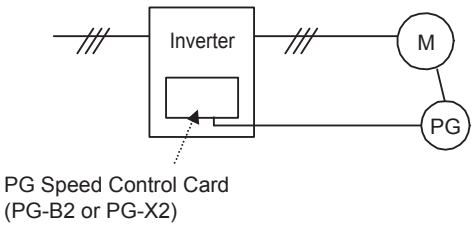

Fig 10.4

Drive Application Precautions

This section provides precautions for selecting, installing, setting, and handling Drives.

◆ Selection

Observe the following precautions in selecting Drive.

■Installing Reactors

A large peak current will flow in the power input circuit when the Drive is connected to a large-capacity power transformer (600 kVA or higher) or when switching a phase capacitor. Excessive peak current can destroy the convertor section. To prevent this, install a DC or AC reactor (optional) to improve the power supply power factor.

DC reactors are built into 200-240 V class Drives of 18.5 to 110 kW and 380-480 V class Drives of 18.5 to 300 kW.

If a thyristor convertor, such as a DC drive, is connected in the same power supply system, connect a DC or AC reactor regardless of the power supply conditions shown in the following diagram.

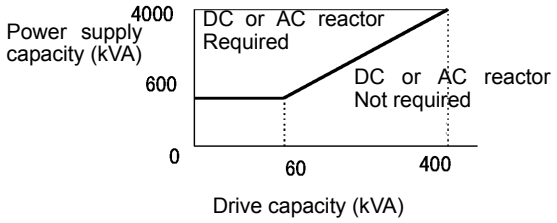

Fig 10.5

■Drive Capacity

When connecting special motors or multiple motors in parallel to Drive, select the Drive capacity so that the rated output current of the Drive is 1.1 times the sum of all the motor rated currents.

■Initial Torque

The startup and acceleration characteristics of the motor are restricted by the overload current ratings of the Drive that is driving the motor. The torque characteristics are generally less than those required when starting using a normal commercial power supply. If a large initial torque is required, select Drive with a somewhat larger capacity or increase the capacity of both the motor and the drive.

■Emergency Stop

Although the Drive's protective functions will stop operation when a fault occurs, the motor will not stop immediately. Always provide mechanical stop and protection mechanisms on equipment requiring an emergency stop.

■Options

Terminals B1, B2, ⊖, ⊕1, ⊕2, ⊕3 are for connecting only the options specifically provided by Yaskawa. Never connect any other devices to these terminals.

◆ Installation

Observe the following precautions when installing Drive.

■Installation in Enclosures

Either install the Drive in a clean location not subject to oil mist, airborne matter, dust, and other contaminants, or install the Drive in a completely enclosed panel. Provide cooling measures and sufficient panel space so that the temperature surrounding the Drive does not go beyond the allowable temperature. Do not install the Drive on wood or other combustible materials.

■Installation Direction

Mount the Drive vertically to a wall or other horizontal surface.

◆ Settings

Observe the following precautions when making settings for Drive.

■Upper Limits

The Digital Operator can be used to set high-speed operation up to a maximum of 400 Hz (depends on the carrier frequency). Incorrect settings can be dangerous. Use the maximum frequency setting functions to set upper limits. (The maximum output frequency is factory-set to 60 Hz.)

■DC Injection Braking

The motor can overheat if the DC injection braking voltage or braking time is set to a large value.

■Acceleration/Deceleration Times

The motor's acceleration and deceleration times are determined by the torque generated by the motor, the load torque, and the load's inertial moment ($GD^2/4$). If the stall prevention functions are activated during acceleration or deceleration, increase the acceleration or deceleration time. The stall prevention functions will increase the acceleration or deceleration time by the amount of time the stall prevention function is active.

To reduce the acceleration or deceleration times, increase the capacity of the motor and Drive.

◆ Handling

Observe the following precautions when wiring or performing maintenance for Drive.

■Wiring Check

The Drive will be internally damaged if the power supply voltage is applied to output terminal U/T1, V/T2, or W/T3. Check wring for any mistakes before supplying power. Check all wiring and sequences carefully.

■Magnetic Contactor Installation

Do not start and stop operation frequently with a magnetic contactor installed on the power supply line. Doing so can cause the Drive to malfunction. Do not turn the Drive ON and OFF with a magnetic contactor more than one time every 30 minutes.

■Maintenance and Inspections

After turn OFF the main circuit power supply, always confirm that the CHARGE indicator is not lit before performing maintenance or inspections. The voltage remaining in the capacitor may cause electric shock.

Motor Application Precautions

This section provides precautions for motor application.

◆ Using the Drive for an Existing Standard Motor

When a standard motor is operated with the Drive, power loss is slightly higher than when operated with a commercial power supply. Observe the following precautions when using Drive for an existing standard motor.

■Low Speed Ranges

Cooling effects diminish in the low-speed range, resulting in an increase in the motor temperature. Therefore, the motor torque should be reduced in the low-speed range whenever using a motor not made by Yaskawa. If 100% torque is required continuously at low speed, consider using a special drive or vector motor.

■Installation Withstand Voltage

If the input voltage is high (440 V or higher) or the wiring distance is long, the motor insulation voltage must be considered. Contact your Yaskawa representative for details.

■High-speed Operation

When using the motor at a high speed (60 Hz or more), problems may arise in dynamic balance and bearing durability. Contact your Yaskawa representative for details.

■Torque Characteristics

The motor may require more acceleration torque when the motor is operated with the Drive than when operated with a commercial power supply. Check the load torque characteristics of the machine to be used with the motor to set a proper V/f pattern.

■Vibration

The Drive uses a high carrier PWM to reduce motor vibration. (A parameter can be set to select low carrier, PWM modulation control as well.) When the motor is operated with the Drive, motor vibration is almost the same as when operated with a commercial power supply.
Motor vibration may, however, become greater in the following cases.

Resonance with the Natural Frequency of the Mechanical System

Take special care when a machine that has been operated at a constant speed is to be operated in variable speed mode. If resonance occurs, install vibration-proof rubber on the motor base or use the frequency jump function to skip any frequency resonating the machine.

Imbalanced Rotor

Take special care when the motor is operated at a higher speed (60 Hz or more).

■Noise

Noise varies with the carrier frequency. At high carrier frequencies, the noise is almost the same when the motor is operated with a commercial power supply. Motor noise, however, becomes louder when the motor is operated at a speed higher than the rated speed (60 Hz).

◆ Using the Drive for Special Motors

Observe the following precautions when using a special motor.

■Pole-changing Motor

The rated input current of pole-changing motors differs from that of standard motors. Select, therefore, an appropriate Drive according to the maximum input current of the motor to be used. Before changing the number of poles, always make sure that the motor has stopped. Otherwise, the overvoltage protective or overcurrent protective mechanism will be actuated, resulting in an error.

■Submersible Motor

The rated input current of submersible motors is higher than that of standard motors. Therefore, always select Drive by checking its rated output current. When the distance between the motor and Drive is long, use a cable thick enough to connect the motor and Drive to prevent motor torque reduction.

■Explosion-proof Motor

When an explosion-proof motor is to be used, it must be subject to an explosion-proof test in conjunction with the Drive. This is also applicable when an existing explosion-proof motor is to be operated with the Drive. Since the Drive itself is, however, not explosion-proof, always install it in a safe place.

■Gearmotor

The speed range for continuous operation differs according to the lubrication method and motor manufacturer. In particular, continuous operation of an oil-lubricated motor in the low speed range may result in burning. If the motor is to be operated at a speed higher than 60 Hz, consult with the manufacturer.

■Synchronous Motor

A synchronous motor is not suitable for Drive control. If a group of synchronous motors is individually turned ON and OFF, synchronism may be lost.

■Single-phase Motor

Do not use Drive for a single-phase motor. The motor should be replaced with a 3-phase motor.

◆ Power Transmission Mechanism (Speed Reducers, Belts, and Chains)

If an oil-lubricated gearbox or speed reducer is used in the power transmission mechanism, oil lubrication will be affected when the motor operates only in the low speed range. The power transmission mechanism will make noise and experience problems with service life and durability if the motor is operated at a speed higher than 60 Hz.

Conformance to UL and CE Markings

Information regarding conformance to UL and CE markings is provided in this section.

◆ CE Markings

CE markings indicate conformance to safety and environmental standards that apply to business transactions (including production, imports, and sales) in Europe. There are unified European standards for mechanical products (Machine Directive), electrical products (Low Voltage Directive), and electrical noise (EMC Directive). CE markings are required for business transactions in Europe (including production, imports, and sales).

The Varispeed G7-Series Drives bear CE markings indicating conformance to the Low Voltage Directive and the EMC Directive.

- Low Voltage Directive: 73/23/EEC
  93/68/EEC
- EMC Directive: 89/336/EEC
  92/31/EEC
  93/68/EEC

Machinery and installations that incorporate the Drive are also subject to CE markings. It is ultimately the responsibility of customers making products incorporating the Drive to attach CE markings to the finished products. The customer must confirm that the finished products (machines or installations) conform to the European Standards.

◆ Requirements for Conformance to CE Markings

■Low Voltage Directive

Varispeed G7-Series Drives satisfy testing for conformance to the Low Voltage Directive under the conditions described in European Standard EN50178.

Requirements for Conformance to the Low Voltage Directive

Varispeed G7-Series Drives must satisfy the following conditions in order to conform to the Low Voltage Directive.

- It must be used under conditions corresponding to overvoltage category 3 or less and pollution degree 2 or less as specified in IEC664.
- Input fuses:
  For details on selecting fuses, refer to *Table 10.2 Selection Requirements for Input Fuses with Examples*.
- With Drives CIMR-G7U2018 to 2110 and CIMR-G7U4018 to 4300, an enclosure preventing foreign matter from entering from the top or front sides is required (IP4X or higher: panel installation).

Input Fuses

In order to conform to the Low Voltage Directive or UL, fuses must be provided for inputs. Use UL-compatible input fuses with ratings higher than the voltages and currents, and fusing I^2t specifications within the ranges shown in the table below.

Table 10.2 Selection Requirements for Input Fuses with Examples

Voltage Class	Drive Model Number CIMR-G7U	Selection Requirements			Input Fuse (Examples)			
		Voltage (V)	Current (A)	Fusing I^2t (A^2sec)	Model Number	Manufacturer	Ratings	Fusing I^2t (A^2sec)
200-240 V class	20P4	240	10	12 to 25	A60Q12-2	FERRAZ	600 V 12 A	17
	20P7	240	15	23 to 55	CR2LS-20/UL	FUJI	600 V 12 A	27
	21P5	240	20	34 to 98	CR2LS-30/UL	FUJI	250 V 20 A	60
	22P2	240	30	82 to 220	CR2LS-50/UL	FUJI	250 V 30 A	200
	23P7	240	40	220 to 610	CR2LS-75/UL	FUJI	250 V 50 A	560
	25P5	240	50	290 to 1300	CR2LS-75/UL	FUJI	250 V 75 A	560
	27P5	240	60	450 to 5000	CR2LS-100/UL	FUJI	250 V 75 A	810
	2011	240	90	1200 to 7200	CR2L-125/UL	FUJI	250 V 100 A	1570
	2015	240	120	1800 to 7200	CR2L-150/UL	FUJI	250 V 125 A	2260
	2018	240	140	870 to 16200	CR2L-150/UL	FUJI	250 V 150 A	2260
	2022	240	160	1500 to 23000	CR2L-200/UL	FUJI	250 V 150 A	4010
	2030	240	220	2100 to 19000	CR2L-260/UL	FUJI	250 V 200 A	7320
	2037	240	270	2700 to 55000	CR2L-300/UL	FUJI	250 V 260 A	9630
	2045	240	300	4000 to 55000	CR2L-300/UL	FUJI	250 V 300 A	9630
	2055	240	370	7100 to 64000	CR2L-400/UL	FUJI	250 V 350 A	24000
	2075	240	500	11000 to 64000	CR2L-500/UL	FUJI	250 V 450 A	40000
	2090	240	600	13000 to 83000	CR2L-600/UL	FUJI	250 V 600 A	52000
	2110	240	700	13000 to 83000	A50P700-4	FERRAZ	250 V 600 A	49000

Table 10.2 Selection Requirements for Input Fuses with Examples

Voltage Class	Drive Model Number CIMR-G7U	Selection Requirements			Input Fuse (Examples)			
		Voltage (V)	Current (A)	Fusing I^2t (A^2sec)	Model Number	Manufacturer	Ratings	Fusing I^2t (A^2sec)
380-480 V class	40P4	480	5	16 to 660	CR6L-20/UL	FUJI	600 V 20 A	26
	40P7	480	10	19 to 660	CR6L-20/UL	FUJI	600 V 20 A	26
	41P5	480	10	46 to 660	CR6L-30/UL	FUJI	600 V 30 A	59
	42P2	480	15	78 to 660	CR6L-50/UL	FUJI	600 V 50 A	317
	43P7	480	20	110 to 660	CR6L-50/UL	FUJI	600 V 50 A	317
	44P0	480	30	220 to 660	CR6L-50/UL	FUJI	600 V 50 A	317
	45P5	480	40	240 to 900	CR6L-50/UL	FUJI	600 V 50 A	317
	47P5	480	50	320 to 900	CR6L-75/UL	FUJI	600 V 75 A	564
	4011	480	50	1000 to 1800	CR6L-100/UL	FUJI	600 V 100 A	1022
	4015	480	60	1500 to 4100	CR6L-150/UL	FUJI	600 V 150 A	3070
	4018	480	70	530 to 5800	CR6L-150/UL	FUJI	600 V 150 A	3070
	4022	480	90	1130 to 5800	CR6L-150/UL	FUJI	600 V 150 A	3070
	4030	480	110	1700 to 5800	CR6L-150/UL	FUJI	600 V 150 A	3070
	4037	480	140	2000 to 13000	CR6L-200/UL	FUJI	600 V 200 A	5200
	4045	480	160	3000 to 13000	CR6L-200/UL	FUJI	600 V 200 A	5200
	4055	480	220	6800 to 55000	CR6L-300/UL	FUJI	600 V 300 A	17700
	4075	480	280	9000 to 55000	CR6L-300/UL	FUJI	600 V 300 A	17700
	4090	480	330	12000 to 23000	A70P400-4	FERRAZ	700 V 400 A	19000
	4110	480	400	18000 to 64000	A70P450-4	FERRAZ	700 V 450 A	24000
	4132	480	450	28000 to 250000	A70P600-4	FERRAZ	700 V 600 A	43000
	4160	480	540	40000 to 250000	A70P700-4	FERRAZ	700 V 700 A	59000
	4185	480	620	43000 to 400000	A70P900-4	FERRAZ	700 V 900 A	97000
	4220	480	750	63000 to 400000	A70P900-4	FERRAZ	700 V 900 A	97000
	4300	480	1000	94000 to 920000	A70P1000-4	FERRAZ	700 V 1000 A	120000

■EMC Directive

Varispeed G7-Series Drives satisfy testing for conformance to the EMC Directive under the conditions described in European Standard EN61800-3.

Installation Method

In order to ensure that the machinery or installation incorporating the Drive conforms to the EMC Directive, perform installation according to the method below.

- Install a noise filter that conforms to European Standards on the input side. (Refer to *Table 10.3 EMC Noise Filters*).
- Use a shielded line or metal piping for wiring between the Drive and Motor. Make the wiring as short as possible.
- To suppress harmonics, install a DC reactor in CIMR-G7U20P4, 20P7, 40P4, and 40P7 models. (Refer to *Table 10.4 DC Reactors for Suppressing Harmonics*.)

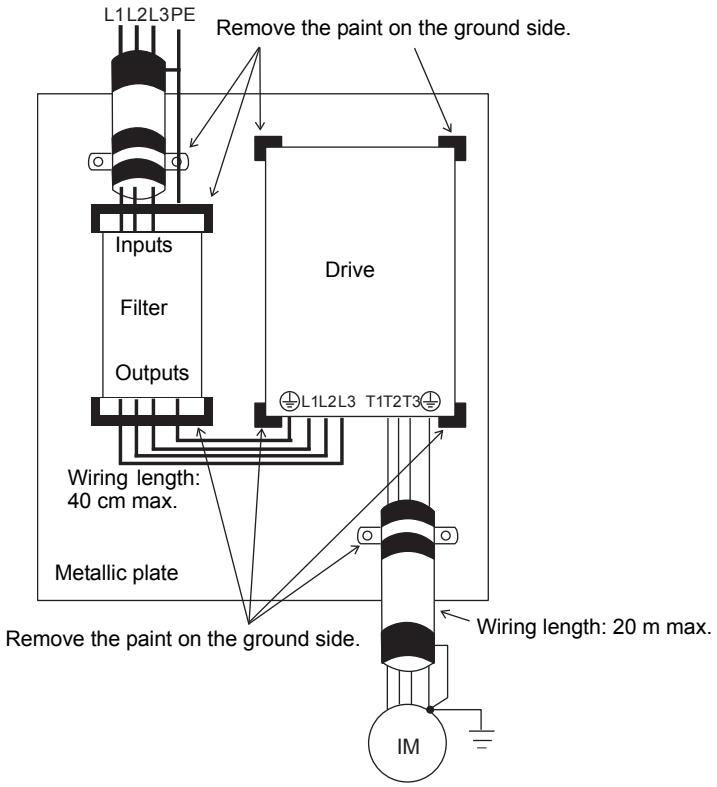

Fig 10.6 Installation Method for Filter and Drive (CIMR-G7U20P4 to 2018, 40P4 to 4018)

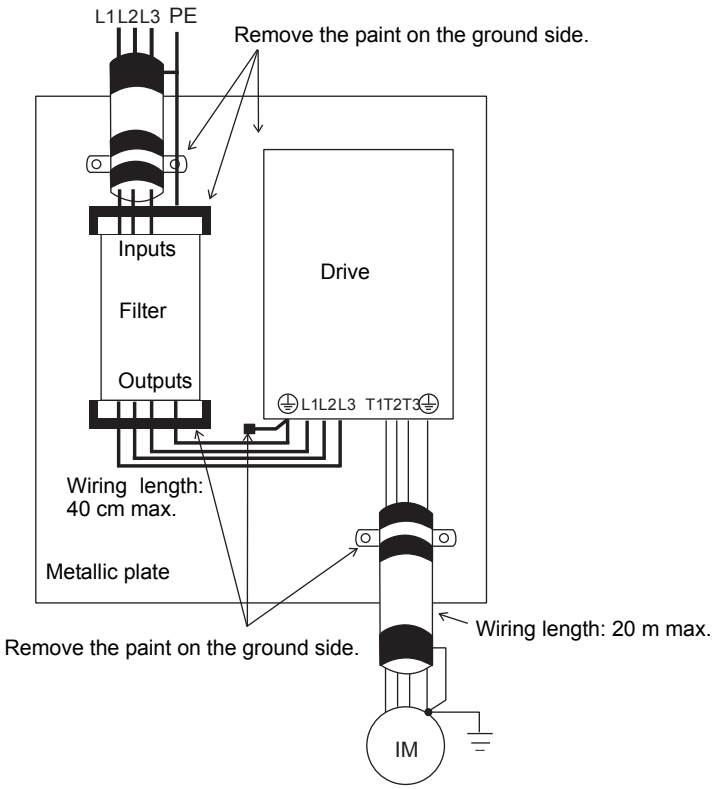

Fig 10.7 Installation Method for Filter and Drive (CIMR-G7U2022 to 2110, 4022 to 4300)

Table 10.3 EMC Noise Filters

Voltage Class	Drive Model Number CIMR-G7U	Noise Filter (Made by Schaffner)			
		Model Number	Rated Current (A)	Weight (kg)	Dimensions
200-240 V class	20P4	FS 5972-10-07	10	1.1	141 x 330 x 46
	20P7				
	21P5	FS 5972-18-07	18	1.3	141 x 330 x 46
	22P2	FS 5972-35-07	35	1.4	141 x 330 x 46
	23P7				
	25P5	FS 5972-60-07	60	3	206 x 355 x 60
	27P5				
	2011	FS 5972-100-07	100	4.9	236 x 408 x 80
	2015				
	2018				
	2022	FS 5972-120-35	120	4.3	90 x 366 x 180
	2030	FS 5972-180-40	180	6	120 x 451 x 170
	2037				
	2045	FS 5972-300-37	300	11	130 x 610 x 240
	2055				
	2075	FS 5972-300-37	360	11	130 x 610 x 240
	2090	FS 5972-300-37	450	11	130 x 610 x 240
	2110				

Table 10.3 EMC Noise Filters

Voltage Class	Drive Model Number CIMR-G7U	Noise Filter (Made by Schaffner)			
		Model Number	Rated Current (A)	Weight (kg)	Dimensions
380-480 V class	40P4	Under development	---	---	---
	40P7				
	41P5	Under development	---	---	---
	42P2				
	43P7				
	44P0				
	45P5				
	47P5	Under development	---	---	---
	4011				
	4015	Under development	---	---	---
	4018				
	4022	Under development	---	---	---
	4030				
	4037	Under development	---	---	---
	4045				
	4055				
	4075	Under development	---	---	---
	4090	Under development	---	---	---
	4110				
	4132	Under development	---	---	---
	4160	Under development	---	---	---
	4185	Under development	---	---	---
	4220	Under development	---	---	---
	4300	Under development	---	---	---

Table 10.4 DC Reactors for Suppressing Harmonics

Voltage Class	Drive Model Number CIMR-G7U	DC Reactor			
		Model Number	Manufacturer	Ratings	Code Number
200-240 V class	20P4	UZDA-B	YASKAWA	5.4 A 8 mH	X010084
	20P7				
380-480 V class	40P4	UZDA-B	YASKAWA	3.2 A 28 mH	X010052
	40P7				

◆ UL Markings

The G7 is UL listed to UL Standard 508C, UL FILE No.: E13145.

◆ Conformance to UL Standard

To comply with UL standard, follow the appropriate installation instructions.

■ Installation Site

Install the Inverter in a pollution degree 2 environment or equivalent.

■ Specification of Closed-Loop Connector

The closed-loop connectors must be installed on conductors before installing to terminal blocks.

Use UL Listed closed-loop connectors shown in **Table 10.5** below.

Table 10.5 JST Closed-Loop Connector Model

Inverter Model CIMR-G7	JST Kit P/N			
	Input Wire Size	Input JST Kit P/N	Output Wire Size	Output JST Kit P/N
2015	2 AWG	38-8	4 AWG	22-8
2018	2 AWG	38-8	2 AWG	38-8
2022	1/0 AWG	60-8	1/0 AWG	60-8
2030	3/0 AWG	80-10	3/0 AWG	80-10
2037	4/0 AWG	100-10	4/0 AWG	100-10
2045	1/0 AWG	60-10 (2 per Ph)	1/0 AWG	60-10 (2 per Ph)
2055	3/0 AWG	80-10 (2 per Ph)	3/0 AWG	80-10 (2 per Ph)
2075	250 kcmil	150-12 (2 per Ph)	4/0 AWG	100-12 (2 per Ph)
2090	400 kcmil	200-12 (2 per Ph)	250 kcmil	150-12 (2 per Ph)
2110	400 kcmil	200-12 (2 per Ph)	300 kcmil	150-12 (2 per Ph)
4018	6 AWG	14-6	6 AWG	14-6
4022	4 AWG	22-6	4 AWG	22-6
4030	2 AWG	38-8	4 AWG	22-8
4037	2 AWG	38-8	2 AWG	38-8
4045	1/0 AWG	60-8	1/0 AWG	60-8
4055	3/0 AWG	80-10	3/0 AWG	80-10
4075	4/0 AWG	100-10	4/0 AWG	100-10
4090	1/0 AWG	60-10 (2 per Ph)	1/0 AWG	60-10 (2 per Ph)
4110	3/0 AWG	80-10 (2 per Ph)	3/0 AWG	80-10 (2 per Ph)
4132	3/0 AWG	80-12 (2 per Ph)	3/0 AWG	80-12 (2 per Ph)
4160	4/0 AWG	100-12 (2 per Ph)	4/0 AWG	100-12 (2 per Ph)
4185	250 kcmil	150-16 (2 per Ph)	250 kcmil	150-16 (2 per Ph)
4220	400 kcmil	200-16 (2 per Ph)	300 kcmil	150-16 (2 per Ph)
4300	650 kcmil	325-16 (2 per Ph)	650 kcmil	325-16 (2 per Ph)

■Control Circuit Terminal

A UL Listed, Class 2 power supply must be used for the control circuits. See **Table 10.6** below.

Table 10.6 Power Supply for Control Circuits

Input/Output	Terminal	Power Supply
Open Collector Outputs	P3, P4, PC, C3, C4	Class 2 power supply
Digital Inputs	S1, S2, S3, S4, S5, S6, S7, S8, S9, S10, S11, S12, SC	LVLC power supply when using internal power supply. Class 2 power supply when using external power supply.
Analog Inputs	RP, +V, -V, A1, A2, A3, AC	

■Interrupting Rating

WARNING! Fire Hazard. Install adequate branch circuit protection according to applicable local codes and this manual **(Table 10.2)**. Failure to comply could result in fire and damage to the drive or injury to personnel.

The G7 drive is suitable for use on a circuit capable of delivering not more than 100,000 RMS symmetrical amperes, 240 Vac (200 V class) and 480 Vac (400 V class), when protected by branch circuit protection devices specified in this manual. Use a circuit breaker or fuses having an interrupting rating not less than 100,000 RMS symmetrical amperes, 600 VAC maximum.

■ Motor Overheat Protection

To protect the motor from overheating, set the E2-01 constant in the Inverter to the same value as the level of the motor rated current.

User Parameters

Factory settings are given in the following table. These setting are for a 200-240 V Class Drive of 0.4 kW set to factory set control method (open-loop vector control).

Table 10.7 User Parameters

No.	Name	Factory Setting	Setting	No.	Name	Factory Setting	Setting
A1-00	Language selection for digital operator display	1*1		b5-11	PID reverse output selection	0	
A1-01	Parameter access level	2		b5-12	Selection of PID feedback command loss detection	0	
A1-02	Control method selection	2*1		b5-13	PID feedback command loss detection level	0	
A1-03	Initialize	0		b5-14	PID feedback command loss detection time	1.0	
A1-04	Password	0		b5-15	PID sleep function operation level	0.0	
A1-05	Password setting	0		b5-16	PID sleep operation delay time	0.0	
A2-01 to A2-32	User setting parameters	-		b5-17	Acceleration/deceleration time for PID reference	0.0	
b1-01	Reference selection	1		b6-01	Dwell frequency at start	0.0	
b1-02	Operation method selection	1		b6-02	Dwell time at start	0.0	
b1-03	Stopping method selection	0		b6-03	Dwell frequency at stop	0.0	
b1-04	Prohibition of reverse operation	0		b6-04	Dwell time at stop	0.0	
b1-05	Operation selection for setting E1-09 or less	0		b7-01	Droop control gain	0.0	
b1-06	Read sequence input twice	1		b7-02	Droop control delay time	0.05	
b1-07	Operation selection after switching to remote mode	0		b8-01	Energy-saving mode selection	0	
b1-08	Run command selection in programming modes	0		b8-02	Energy-saving gain	1.0*4	
b2-01	Zero speed level (DC injection braking starting frequency)	0.5		b8-03	Energy-saving filter time constant	0.50*5	
b2-02	DC injection braking current	50		b8-04	Energy-saving coefficient	*6	
b2-03	DC injection braking time at start	0.00		b8-05	Power detection filter time constant	20	
b2-04	DC injection braking time at stop	0.50		b8-06	Search operation voltage limiter	0	
b2-08	Magnetic flux compensation volume	0		b9-01	Zero-servo gain	5	
b3-01	Speed search selection	2*2 *3		b9-02	Zero-servo completion width	10	
b3-02	Speed search operating current	100*2		C1-01	Acceleration time 1	10.0	
b3-03	Speed search deceleration time	2.0		C1-02	Deceleration time 1	10.0	
b3-05	Speed search wait time	0.2		C1-03	Acceleration time 2	10.0	
b4-01	Timer function ON-delay time	0.0		C1-04	Deceleration time 2	10.0	
b4-02	Timer function OFF-delay time	0.0		C1-05	Acceleration time 3	10.0	
b5-01	PID control mode selection	0		C1-06	Deceleration time 3	10.0	
b5-02	Proportional gain (P)	1.00		C1-07	Acceleration time 4	10.0	
b5-03	Integral (I) time	1.0		C1-08	Deceleration time 4	10.0	
b5-04	Integral (I) limit	100.0		C1-09	Emergency stop time	10.0	
b5-05	Derivative (D) time	0.00		C1-10	Accel/decel time setting unit	1	
b5-06	PID limit	100.0		C1-11	Accel/decel time switching frequency	0.0	
b5-07	PID offset adjustment	0.0		C2-01	S-curve characteristic time at acceleration start	0.20	
b5-08	PID primary delay time constant	0.00		C2-02	S-curve characteristic time at acceleration end	0.20	
b5-09	PID output characteristics selection	0		C2-03	S-curve characteristic time at deceleration start	0.20	
b5-10	PID output gain	1.0		C2-04	S-curve characteristic time at deceleration end	0.00	

Table 10.7 User Parameters (Continued)

No.	Name	Factory Setting	Setting	No.	Name	Factory Setting	Setting
C3-01	Slip compensation gain	1.0*3		d3-01	Jump frequency 1	0.0	
C3-02	Slip compensation primary delay time	200*2		d3-02	Jump frequency 2	0.0	
C3-03	Slip compensation limit	200		d3-03	Jump frequency 3	0.0	
C3-04	Slip compensation selection during regeneration	0		d3-04	Jump frequency width	1.0	
C3-05	Output voltage limit operation selection	0		d4-01	Frequency reference hold function selection	0	
C4-01	Torque compensation gain	1.00		d4-02	+ - Speed limits	10	
C4-02	Torque compensation primary delay time constant	20*2*3		d5-01	Torque control selection	0	
C4-03	Forward starting torque	0.0		d5-02	Torque reference delay time	0	
C4-04	Reverse starting torque	0.0		d5-03	Speed limit selection	1	
C4-05	Starting torque time constant	10		d5-04	Speed limit	0	
C5-01	ASR proportional gain 1	20.00		d5-05	Speed limit bias	10	
C5-02	ASR integral (I) time 1	0.500		d5-06	Speed/torque control switching timer	0	
C5-03	ASR proportional gain 2	20.00		d6-01	Field weakening level	80	
C5-04	ASR integral (I) time 2	0.500		d6-02	Field frequency	0.0	
C5-05	ASR limit	5.0		d6-03	Field forcing function selection	0	
C5-06	ASR primary delay time	0.004		d6-05	AϕR time constant	1.00	
C5-07	ASR switching frequency	0.0		E1-01	Input voltage setting	200*7	
C5-08	ASR integral (I) limit	400		E1-03	V/f pattern selection	F	
C6-02	Carrier frequency selection	6*6		E1-04	Max. output frequency	60.0	
C6-03	Carrier Frequency Upper Limit	15.0*6		E1-05	Max. voltage	200.0 *2 *7	
C6-04	Carrier Frequency Lower Limit	15.0*6		E1-06	Base frequency	60.0*2	
C6-05	Carrier Frequency Proportional Gain	00		E1-07	Mid. output frequency	3.0*2	
C6-11	Carrier frequency for open-loop vector control 2	4		E1-08	Mid. output frequency voltage	15.0*2 *7	
d1-01	Frequency reference 1	0.00		E1-09	Min. output frequency	1.5*2	
d1-02	Frequency reference 2	0.00		E1-10	Min. output frequency voltage	9.0*2 *7	
d1-03	Frequency reference 3	0.00		E1-11	Mid. output frequency 2	0.0*9	
d1-04	Frequency reference 4	0.00		E1-12	Mid. output frequency voltage 2	0.0*9	
d1-05	Frequency reference 5	0.00		E1-13	Base voltage	0.0*10	
d1-06	Frequency reference 6	0.00		E2-01	Motor rated current	1.90*6	
d1-07	Frequency reference 7	0.00		E2-02	Motor rated slip	2.90*6	
d1-08	Frequency reference 8	0.00		E2-03	Motor no-load current	1.20*6	
d1-09	Frequency reference 9	0.00		E2-04	Number of motor poles	4	
d1-10	Frequency reference 10	0.00		E2-05	Motor line-to-line resistance	9.842*6	
d1-11	Frequency reference 11	0.00		E2-06	Motor leak inductance	18.2*6	
d1-12	Frequency reference 12	0.00		E2-07	Motor iron saturation coefficient 1	0.50	
d1-13	Frequency reference 13	0.00		E2-08	Motor iron saturation coefficient 2	0.75	
d1-14	Frequency reference 14	0.00		E2-09	Motor mechanical loss	0.0	
d1-15	Frequency reference 15	0.00		E2-10	Motor iron loss for torque compen-sation	14*4	
d1-16	Frequency reference 16	0.00		E2-11	Motor rated output	0.40*4	
d1-17	Jog frequency reference	6.00		E3-01	Motor 2 control method selection	2	
d2-01	Frequency reference upper limit	100.0		E3-02	Motor 2 max. output frequency (FMAX)	60.0*2	
d2-02	Frequency reference lower limit	0.0		E3-03	Motor 2 max. voltage (VMAX)	230.0*2	
d2-03	Master speed reference lower limit	0.0		E3-04	Motor 2 max. voltage frequency (FA)	60.0	

Table 10.7 User Parameters (Continued)

No.	Name	Factory Setting	Setting	No.	Name	Factory Setting	Setting
E3-05	Motor 2 mid. output frequency 1 (FB)	3.0 *2		F4-08	Analog output signal level for channel 2	0	
E3-06	Motor 2 mid. output frequency voltage 1 (VC)	12.6 *7		F5-01	Channel 1 output selection	0	
E3-07	Motor 2 min. output frequency (FMIN)	0.5 *2		F5-02	Channel 2 output selection	1	
E3-08	Motor 2 min. output frequency voltage (VMIN)	2.3 *7		F5-03	Channel 3 output selection	2	
E4-01	Motor 2 rated current	1.90 *6		F5-04	Channel 4 output selection	4	
E4-02	Motor 2 rated slip	2.90 *6		F5-05	Channel 5 output selection	6	
E4-03	Motor 2 no-load current	1.20 *6		F5-06	Channel 6 output selection	37	
E4-04	Motor 2 number of poles (number of poles)	4		F5-07	Channel 7 output selection	0F	
E4-05	Motor 2 line-to-line resistance	9.842*6		F5-08	Channel 8 output selection	0F	
E4-06	Motor 2 leak inductance	18.2*6		F5-09	DO-08 output mode selection	0	
E4-07	Motor 2 rated capacity	0.40*6		F6-01	Operation selection after communications error	1	
F1-01	PG constant	1024		F6-02	Input level of external fault from Communications Option Card	0	
F1-02	Operation selection at PG open circuit (PGO)	1		F6-03	Stopping method for external fault from Communications Option Card	1	
F1-03	Operation selection at overspeed (OS)	1		F6-04	Trace sampling from Communications Option Card	0	
F1-04	Operation selection at deviation	3		F6-06	Torque reference/torque limit selection from optical option	1	
F1-05	PG rotation	0		H1-01	Terminal S3 function selection	24	
F1-06	PG division rate (PG pulse monitor)	1		H1-02	Terminal S4 function selection	14	
F1-07	Integral value during accel/decel enable/disable	0		H1-03	Terminal S5 function selection	3 (0)*8	
F1-08	Overspeed detection level	115		H1-04	Terminal S6 function selection	4 (3)*8	
F1-09	Overspeed detection delay time	0.0		H1-05	Terminal S7 function selection	6 (4)*8	
F1-10	Excessive speed deviation detection level	10		H1-06	Terminal S8 function selection	8 (6)	
F1-11	Excessive speed deviation detection delay time	0.5		H1-07	Terminal S9 function selection	5	
F1-12	Number of PG gear teeth 1	0		H1-08	Terminal S10 function selection	32	
F1-13	Number of PG gear teeth 2	0		H1-09	Terminal S11 function selection	7	
F1-14	PG open-circuit detection time	2.0		H1-10	Terminal S12 function selection	15	
F2-01	Bi-polar or uni-polar input selection	0		H2-01	Terminal M1-M2 function selection (contact)	0	
F3-01	Digital input option	0		H2-02	Terminal M3-M4 function selection (open collector)	1	
F4-01	Channel 1 monitor selection	2		H2-03	Terminal M5-M6 function selection (open collector)	2	
F4-02	Channel 1 gain	1.00		H2-04	Terminal P3 function selection (open-collector)	6	
F4-03	Channel 2 monitor selection	3		H2-05	Terminal P4 function selection (open-collector)	5	
F4-04	Channel 2 gain	0.50		H3-01	Signal level selection (terminal A1)	0	
F4-05	Channel 1 output monitor bias	0.0		H3-02	Gain (terminal A1)	0	
F4-06	Channel 2 output monitor bias	0.0		H3-03	Bias (terminal A1)	100.0	
F4-07	Analog output signal level for channel 1	0		H3-04	Signal level selection (terminal A3)	0	

Table 10.7 User Parameters (Continued)

No.	Name	Factory Setting	Setting	No.	Name	Factory Setting	Setting
H3-05	Multi-function analog input (terminal A3)	2		L2-04	Voltage recovery time	0.3	
H3-06	Gain (terminal A3)	100.0		L2-05	Undervoltage detection level	190*7	
H3-07	Bias (terminal A3)	0.0		L2-06	KEB deceleration time	0.0	
H3-08	Multi-function analog input terminal A2 function selection	2		L2-07	Momentary recovery time	0*11	
H3-09	Multi-function analog input terminal A2 signal level selection	0		L2-08	Frequency reduction gain at KEB start	100	
H3-10	Gain (terminal A2)	100.0		L3-01	Stall prevention selection during accel	1	
H3-11	Bias (terminal A2)	0.0		L3-02	Stall prevention level during accel	150	
H3-12	Analog input filter time constant	0.03		L3-03	Stall prevention limit during accel	50	
H4-01	Monitor selection (terminal FM)	2		L3-04	Stall prevention selection during decel	1	
H4-02	Gain (terminal FM)	1.00		L3-05	Stall prevention selection during running	1	
H4-03	Bias (terminal FM)	0.0		L3-06	Stall prevention level during running	160	
H4-04	Monitor selection (terminal AM)	3		L4-01	Speed agreement detection level	0.0	
H4-05	Gain (terminal AM)	0.50		L4-02	Speed agreement detection width	2.0	
H4-06	Bias (terminal AM)	0.0		L4-03	Speed agreement detection level (+/-)	0.0	
H4-07	Analog output 1 signal level selection	0		L4-04	Speed agreement detection width (+/-)	2.0	
H4-08	Analog output 2 signal level selection	0		L4-05	Operation when frequency reference is missing	0	
H5-01	Station address	1F		L5-01	Number of auto restart attempts	0	
H5-02	Communication speed selection	3		L5-02	Auto restart operation selection	0	
H5-03	Communication parity selection	0		L6-01	Torque detection selection 1	0	
H5-04	Stopping method after communication error	3		L6-02	Torque detection level 1	150	
H5-05	Communication error detection selection	1		L6-03	Torque detection time 1	0.1	
H5-06	Send wait time	5		L6-04	Torque detection selection 2	0	
H5-07	RTS control ON/OFF	1		L6-05	Torque detection level 2	150	
H6-01	Pulse train input function selection	0		L6-06	Torque detection time 2	0.1	
H6-02	Pulse train input scaling	1440		L7-01	Forward drive torque limit	200	
H6-03	Pulse train input gain	100.0		L7-02	Reverse drive torque limit	200	
H6-04	Pulse train input bias	0.0		L7-03	Forward regenerative torque limit	200	
H6-05	Pulse train input filter time	0.10		L7-04	Reverse regenerative torque limit	200	
H6-06	Pulse train monitor selection	2		L8-01	Protect selection for internal DB resistor (Type ERF)	0	
H6-07	Pulse train monitor scaling	1440		L8-02	Overheat pre-alarm level	95	
L1-01	Motor protection selection	1		L8-03	Operation selection after overheat pre-alarm	3	
L1-02	Motor protection time constant	1.0		L8-05	Input open-phase protection selection	0	
L1-03	Alarm operation selection during motor overheating	3		L8-07	Output open-phase protection selection	0	
L1-04	Motor overheating operation selection	1		L8-09	Ground protection selection	1	
L1-05	Motor temperature input filter time constant	0.20		L8-10	Cooling fan control selection	0	
L2-01	Momentary power loss detection	0		L8-11	Cooling fan control delay time	60	
L2-02	Momentary power loss ridethru time	0.1*6		L8-12	Ambient temperature	45	
L2-03	Min. baseblock time	0.5		L8-15	OL2 characteristics selection at low speeds	1	

Table 10.7 User Parameters (Continued)

No.	Name	Factory Setting	Setting	No.	Name	Factory Setting	Setting
L8-18	Soft CLA selection	1		o2-01	LOCAL/REMOTE key enable/disable	1	
n1-01	Hunting-prevention function selection	1		o2-02	STOP key during control circuit terminal operation	1	
n1-02	Hunting-prevention gain	1.00		o2-03	User parameter initial value	0	
n2-01	Speed feedback detection control (AFR) gain	1.00		o2-04	kVA selection	0*6	
n2-02	Speed feedback detection control (AFR) time constant	50		o2-05	Frequency reference setting method selection	0	
n2-03	Speed feedback detection control (AFR) time constant 2	750		o2-06	Operation selection when digital operator is disconnected	0	
n3-01	High-slip braking deceleration frequency width	5		o2-07	Cumulative operation time setting	0	
n3-02	High-slip braking current limit	150		o2-08	Cumulative operation time selection	0	
n3-03	High-slip braking stop dwell time	1.0		o2-10	Fan operation time setting	0	
n3-04	High-slip braking OL time	40		o2-12	Fault trace/fault history clear function	0	
n4-07	Integral time of speed estimator	0.100		o3-01	Copy function selection	0	
n4-08	Proportional gain of speed estimator	15		o3-02	Read permitted selection	0	
n4-17	Torque adjustment gain	0.8		T1-00	Motor 1/2 selection	1	
n4-18	Feeder resistance adjustment gain	1.00		T1-01	Autotuning mode selection	0	
n5-01	Feed forward control selection	0		T1-02	Motor output power	0.40	
n5-02	Motor acceleration time	0.178		T1-03	Motor rated voltage	200.0*7	
n5-03	Feed forward proportional gain	1.0		T1-04	Motor rated current	1.90*6	
o1-01	Monitor selection	6		T1-05	Motor base frequency	60.00	
o1-02	Monitor selection after power up	1		T1-06	Number of motor poles	4	
o1-03	Frequency units of reference setting and monitor	0		T1-07	Motor base speed	1750	
o1-04	Setting unit for frequency parameters related to V/f characteristics	0		T1-08	PG pulses per revolution for teaching	600	
o1-05	LCD brightness adjustment	3					

* 1. Not initialized. (Japanese standard specifications: A1-01 = 1, A1-02 = 2)
* 2. The factory setting will change if the control method is changed. The factory settings given above are for V/f without PG control.
* 3. Factory setting depends on the control method (A1-02).
* 4. For V/f with PG control: 1.0
* 5. For Drives with a capacity of 55 kW or more: 2.00
* 6. Setting range and initial setting depend on Drive capacity.
* 7. Setting for 200-240 V class Drives. For 380-480 V class Drives, double the value.
* 8. Factory setting in the parentheses is for 3-wire sequence.
* 9. The contents is ignored if the setting is 0.0.
* 10.E1-13 will have the same value as E1-05 after autotuning.
* 11.If the set value is 0, acceleration will be to the speeds for the acceleration times (C1-01 to C1-08)
* 12.The setting range is 10% to 200% of the Drive rated output. (The value given is for a 200-240 V Class Drive for 0.4 kW.)

Symbols

+/- speed, 6-75

Numerics

2-wire sequence, 6-7
3-wire sequence, 6-8

A

AC reactor, 2-17
acceleration and deceleration times, 6-15
advanced programming mode, 3-5, 3-10
ASIC internal RAM fault, 7-8
ASIC version fault, 7-8
auto restart, 6-66
autotuning, 4-9
autotuning mode, 3-5, 3-14

B

baseblock circuit error, 7-7
braking resistor, 2-21
braking resistor unit, 2-21
BUS Option Com Err, 7-7, 7-12

C

CALL Com Call, 7-12
CE Memobus Com Err, 7-12
CE Memobus Com Err, 7-7
CF out of control, 7-5
circuit breaker, 2-16
common specifications, 9-4
communications on standby, 7-12
communications option card A/D converter error, 7-8
communications option card DPRAM error, 7-8
communications option card model code error, 7-8
communications option card self diagnostic error, 7-8
parameter selection error, 7-13
parameter setting error, 7-14
parameter setting range error, 7-13
control circuit terminals, 2-22
control fault, 7-5
control method, 4-8
control method selection error, 7-13
control power fault, 7-3
cooling fin overheating, 7-3
CPF00 CPF, 7-7
CPF01 CPF01, 7-7
CPU internal A/D converter error, 7-8
CPU-ASIC mutual diagnosis fault, 7-8
crimp terminals, 2-5, 2-40

D

daily inspection, 8-2
DC link choke, 2-17
detecting motor overspeed, 6-155
detecting motor torque, 6-45
detecting PG open circuit, 6-155
DEV Speed Deviation, 7-10
digital operator, 3-2
digital operator communications error 1, 7-7
digital operator communications error 2, 7-7
digital operator connection fault, 7-7
digital output cards, 6-156
drive mode, 3-5, 3-7
dwell function, 6-19

E

EEPROM error, 7-7
EEPROM write error, 7-14
EF External Fault, 7-9
EF0 Opt External Flt, 7-6, 7-10
emergency stop, 6-14
enclosed wall-mounted type, 1-8
ERR EEPROM R/W Err, 7-14
excessive speed deviation, 7-5, 7-10
external fault function, 6-78

F

FBL Feedback Loss, 7-6, 7-11
FJOG, 6-77
forward/reverse run commands input together, 7-9
frequency reference, 6-2, 6-25
fuse blown, 7-2

G

ground fault, 7-2
ground fault interrupter, 2-15
ground wiring, 2-20

H

high-slip braking OL, 7-4
hunting-prevention function, 6-37

I

incorrect drive capacity setting, 7-13
inductive noise, 2-19
inrush prevention circuit fault, 7-3
installation site, 1-10
installed braking resistor overheating, 7-4
internal braking transistor fault, 7-4
drive input voltage, 6-113
drive overload, 7-4
drive's cooling fan stopped, 7-3

J

jump frequency function, 6-27

L

limiting motor rotation direction, 6-56
loaded operation, 4-15

M

magnetic contactor, 2-17
main circuit overvoltage, 7-2
main circuit undervoltage, 7-3, 7-9
main circuit voltage fault, 7-3
maintenance and inspection, 8-1
MODBUS/Memobus communications, 6-84
MODBUS/Memobus communications error, 7-7, 7-12
modes, 3-5
motor parameters, 6-108
motor overheating, 7-9
motor overheating alarm, 7-3
motor overheating fault, 7-4
motor overload, 7-4
motor protection operation time, 6-53
mounting dimensions, 1-7
multi-function analog input, 6-43
multi-function analog input selection error, 7-13
multi-function input selection error, 7-13
multi-step speed operation, 6-5

N

noise filter, 2-17
no-load operation, 4-14
number of gear teeth between PG and motor, 6-154
number of PG pulses, 6-153

O

OH Heatsink Overtemp, 7-9
OH2 Over Heat 2, 7-9
OH3 Motor Overheat 1, 7-9
OL3 Overtorque Det 1, 7-10
OL4 Overtorque Det 2, 7-10
OPE01 kVA Selection, 7-13
OPE11 Carr Freq/On-Delay, 7-14
OPE02 Limit, 7-13
OPE03 Terminal, 7-13
OPE05 Sequence Select, 7-13
OPE06 PG Opt Missing, 7-13
OPE07 Analog Selection, 7-13
OPE08, 7-13

OPE09, 7-13
OPE10 V/f Ptrn Setting, 7-14
open chassis type, 1-4
open-loop vector control, 4-9
operation errors, 7-13
OPR Oper Disconnect, 7-7
option card communications error, 7-12
option card connection error, 7-8
option card selection error, 7-13
option communications error, 7-7
OS Overspeed Det, 7-10
output open-phase, 7-3
OV DC Bus Overvolt, 7-9
overcurrent, 7-2
overspeed, 7-5, 7-10
overtorque 2, 7-10
overtorque detected 1, 7-4
overtorque detected 2, 7-4

P

password, 4-16, 6-149
periodic inspection, 8-2
periodic maintenance of parts, 8-3
PG (encoder) pulses, 2-41
PG disconnection, 7-10
PG disconnection detected, 7-5
PG pulse monitor output dividing ratio, 6-155
PG rotation direction, 6-153
PG speed control card, 6-153
PG speed control cards, 2-33
PGO PG Open, 7-10
PID control, 6-98
PID control selection error, 7-13
PID feedback reference lost, 7-6, 7-11
power ON, 4-3

Q

quick programming mode, 3-5, 3-9

R

radio interference, 2-20
rated current, 6-52
RJOG, 6-77
run command, 6-7

S

S-curve characteristics, 6-18
slip compensation function, 6-32
speed control with PG, 6-151
stabilizing speed, 6-38
stall prevention function, 6-20, 6-22, 6-45
standard connection diagrams, 2-15
standard drive specifications, 9-2
stopping methods, 6-9
straight solderless terminals, 2-40
surge absorber, 2-17
switching monitors when the power supply is ON, 6-141

T

terminal block, 2-4
thermal overload relay, 2-19
tightening torque, 2-40
timer function, 6-97
torque compensation, 6-35
torque limit function, 6-42
trial operation, 4-1
troubleshooting, 7-1, 7-18

U

UL3 Undertorq Det 1, 7-10
UL4 Undertorq Det 2, 7-10
undertorque 1, 7-10
undertorque 2, 7-10
undertorque detected 1, 7-5
undertorque detected 2, 7-5
user parameter access levels, 4-16
UV DC Bus Undervolt, 7-9

V

V/f control, 4-8
V/f control with PG, 4-8
V/f pattern, 6-111, 6-113
verify mode, 3-5, 3-13

W

watchdog timer fault, 7-8
wire size, 2-22
wiring, 2-1, 2-36

Drives Technical Support in USA and Canada

Technical Support for Drives and Drives is available by phone as follows:
Normal: Monday through Friday during the hours of 8 a.m. to 5:00 p.m. C.S.T.
Emergency: After normal hours, 7 days a week including weekends and holidays

To contact Drives Technical Support, please call 1-800-YASKAWA (927-5292).
From the menu, dial 2 for Drive and Drive Products, then 5 for Technical Support.

Drives Technical Support can also be reached by e-mail at DriveSupport@yaskawa.com.
Support information, such as technical manuals, FAQs, instruction sheets and software downloads are available at our website, www.yaskawa.com.

When calling for technical support, please have the following materials available:

- The appropriate Technical Manual in hand because the support associate may refer to this
- Complete nameplate information from the drive and the motor.
(Confirm that Drive Nameplate Output amps is greater than Motor Nameplate amps)
- A list with your parameter settings
- A sketch of the electrical power train, from AC line to motor, including filters and disconnects

Field Service, Start Up Assistance, Factory Repair, Replacement Parts, and Other Support

Contact Drives Technical Support for help with any of these needs.

Technical Training

Training is conducted at Yaskawa training centers, at customer sites, and via the internet.
For information, visit www.yaskawa.com or call 1-800-YASKAWA (927-5292).
From the phone menu, dial 2 for Drive and Drive Products, then 4 for Product Training.

Support in Other Countries

Yaskawa is a multi-national company with offices and service representation around the world.
To obtain support, always contact the local distributor first for guidance and assistance.
Contact the closest Yaskawa office listed for further assistance.

G7 Drive

YASKAWA

YASKAWA ELECTRIC AMERICA, INC.
Drives Division
16555 W. Ryerson Rd., New Berlin, WI 53151, U.S.A.
Phone: (800) YASKAWA (800-927-5292) Fax: (262) 782-3418
Internet: http://www.drives.com

YASKAWA AMERICA, INC.
Chicago-Corporate Headquarters
2121 Norman Drive South, Waukegan, IL 60085, U.S.A.
Phone: (800) YASKAWA (800-927-5292) Fax: (847) 887-7310
Internet: http://www.yaskawa.com

MOTOMAN INC.
805 Liberty Lane, West Carrollton, OH 45449, U.S.A.
Phone: (937) 847-6200 Fax: (937) 847-6277
Internet: http://www.motoman.com

YASKAWA ELECTRIC CORPORATION
New Pier Takeshiba South Tower, 1-16-1, Kaigan, Minatoku, Tokyo, 105-6891, Japan
Phone: 81-3-5402-4502 Fax: 81-3-5402-4580
Internet: http://www.yaskawa.co.jp

YASKAWA ELETRICO DO BRASIL COMERCIO LTDA.
Avenida Fagundes Filho, 620 Bairro Saude Sao Paolo-SP, Brasil CEP: 04304-000
Phone: 55-11-3585-1100 Fax: 55-11-5581-8795
Internet: http://www.yaskawa.com.br

YASKAWA EUROPE GmbH
Haupstrauße 185, 65760 Eschborn, Germany
Phone: 49-6196-569-300 Fax: 49-6196-569-398

MOTOMAN ROBOTICS AB
Box 504 S38525, Torsas, Sweden
Phone: 46-486-48800 Fax: 46-486-41410

MOTOMAN ROBOTEC GmbH
Kammerfeldstrabe 1, 85391 Allershausen, Germany
Phone: 49-8166-900 Fax: 49-8166-9039

YASKAWA ELECTRIC UK LTD.
1 Hunt Hill Orchardton Woods Cumbernauld, G68 9LF, Scotland, United Kingdom
Phone: 44-12-3673-5000 Fax: 44-12-3645-8182

YASKAWA ELECTRIC KOREA CORPORATION
7F, Doore Bldg. 24, Yeoido-dong,Yeoungdungpo-gu, Seoul,150-877,Korea
Phone: 82-2-784-7844 Fax: 82-2-784-8495

YASKAWA ELECTRIC (SINGAPORE) PTE. LTD.
Head Office: 151 Lorong Chuan, #04-01, New Tech Park Singapore 556741, Singapore
Phone: 65-282-3003 Fax: 65-289-3003

TAIPEI OFFICE (AND YATEC ENGINEERING CORPORATION)
10F 146 Sung Chiang Road, Taipei, Taiwan
Phone: 886-2-2563-0010 Fax: 886-2-2567-4677

YASKAWA JASON (HK) COMPANY LIMITED
Rm. 2909-10, Hong Kong Plaza, 186-191 Connaught Road West, Hong Kong
Phone: 852-2803-2385 Fax: 852-2547-5773

BEIJING OFFICE
Room No. 301 Office Building of Beijing International Club,
21 Jianguomanwai Avenue, Beijing 100020, China
Phone: 86-10-6532-1850 Fax: 86-10-6532-1851

SHANGHAI OFFICE
27 Hui He Road Shanghai 200437 China
Phone: 86-21-6553-6600 Fax: 86-21-6531-4242

SHANGHAI YASKAWA-TONJI M & E CO., LTD.
27 Hui He Road Shanghai 200437 China
Phone: 86-21-6533-2828 Fax: 86-21-6553-6677

BEIJING YASKAWA BEIKE AUTOMATION ENGINEERING CO., LTD.
30 Xue Yuan Road, Haidian, Beijing 100083 China
Phone: 86-10-6232-9943 Fax: 86-10-6234-5002

SHOUGANG MOTOMAN ROBOT CO., LTD.
7, Yongchang-North Street, Beijing Economic & Technological Development Area,
Beijing 100076 China
Phone: 86-10-6788-0551 Fax: 86-10-6788-2878

YEA, TAICHUNG OFFICE IN TAIWAIN
B1, 6F, No.51, Section 2, Kung-Yi Road, Taichung City, Taiwan, R.O.C.
Phone: 886-4-2320-2227 Fax:886-4-2320-2239

Document Number: TM.G7.01 Rev: 15-06

Data subject to change without notice. Yaskawa America, Inc.

TM.G7.01