Frequency Inverter

CFW100 V2.2X

Programming Manual

Programming Manual

Series: CFW100

Language: English

Document Number: 10002853582 / 00

Software Version: 2.2X

Publication Date: 06/2014

NOTE!
For further information on the availability of the DeviceNet communication protocol, contact the manufacturer (WEG).

QUICK REFERENCE OF PARAMETERS, ALARMS AND FAULTS 0-1

1 SAFETY INSTRUCTIONS 1-1
1.1 SAFETY WARNINGS IN THIS MANUAL 1-1
1.2 SAFETY WARNINGS IN THE PRODUCT.....1-1
1.3 PRELIMINARY RECOMMENDATIONS.....1-2

2 GENERAL INFORMATION.....2-1
2.1 ABOUT THE MANUAL 2-1
2.2 TERMINOLOGY AND DEFINITIONS.....2-1
2.2.1 Terms and Definitions Used.....2-1
2.2.2 Numerical Representation..... 2-2

3 ABOUT THE CFW100 3-1
3.1 ABOUT THE CFW100..... 3-1

4 HMI AND BASIC PROGRAMMING.....4-1
4.1 USE OF THE HMI TO OPERATE THE INVERTER..... 4-1
4.2 INDICATIONS ON THE HMI DISPLAY..... 4-1
4.3 OPERATING MODES OF THE HMI..... 4-1

5 PROGRAMMING BASIC INSTRUCTIONS.....5-1
5.1 SETTING OF DISPLAY INDICATIONS 5-1
5.2 BACKUP PARAMETERS 5-3
5.3 SITUATIONS FOR CONFIG STATUS..... 5-4

6 IDENTIFICATION OF THE INVERTER MODEL AND ACCESSORIES..6-1
6.1 INVERTER DATA 6-1

7 LOGICAL COMMAND AND FREQUENCY REFERENCE 7-1
7.1 SELECTION FOR LOGICAL COMMAND AND FREQUENCY REFERENCE 7-1
7.2 REFERENCE FREQUENCY 7-6
7.2.1 Limits for Frequency Reference 7-6
7.2.2 Backup of the Speed Reference.....7-7
7.2.3 Parameters for Reference Frequency.....7-7
7.2.4 Reference via Electronic Potentiometer 7-9
7.2.5 Frequency Input FI 7-10
7.2.6 “13-Bit Speed” Reference 7-10
7.3 CONTROL WORD AND INVERTER STATUS.....7-10
7.3.1 Control via HMI Inputs 7-12
7.3.2 Control via Digital Inputs 7-12

8 AVAILABLE MOTOR CONTROL TYPES.....8-1

9 V/f SCALAR CONTROL 9-1
9.1 PARAMETERIZATION OF THE V/f SCALAR CONTROL..... 9-3
9.2 START-UP IN V/f MODE 9-7

10 VVW VECTOR CONTROL 10-1
10.1 VVW VECTOR CONTROL PARAMETERIZATION..... 10-3
10.2 START-UP IN VVW MODE..... 10-5

11 FUNCTIONS COMMON TO ALL THE CONTROL MODES 11-1
11.1 RAMPS 11-1
11.2 DC LINK VOLTAGE AND OUTPUT CURRENT LIMITATION 11-3
11.2.1 DC Link Voltage Limitation by “Ramp Hold” P150 = 0 or 2: 11-3
11.2.2 DC Link Voltage Limitation by “Accelerate Ramp” P150 = 1 or 3: 11-3
11.2.3 Output Current Limitation by “Ramp Hold” P150 = 2 or 3: 11-5
11.2.4 Current Limitation Type “Decelerate Ramp” P150 = 0 or 1: 11-5
11.3 FLYING START / RIDE-THROUGH 11-6
11.3.1 Flying Start Function 11-7
11.3.2 Ride-Through Function 11-7
11.4 DC BRAKING 11-8
11.5 AVOIDED FREQUENCY 11-10

12 DIGITAL AND ANALOG INPUTS AND OUTPUTS 12-1
12.1 ANALOG INPUTS 12-1
12.2 FREQUENCY INPUT 12-4
12.3 DIGITAL INPUT 12-6
12.4 DIGITAL OUTPUTS 12-12

13 FAULTS AND ALARMS 13-1
13.1 MOTOR OVERLOAD PROTECTION (F072 AND A046) 13-1
13.2 IGBTS OVERLOAD PROTECTION (F051 AND A050) 13-2
13.3 OVERCURRENT PROTECTION (F070) 13-2
13.4 LINK VOLTAGE SUPERVISION (F021 AND F022) 13-3
13.5 VVW CONTROL MODE SELF-TUNING FAULT (F033) 13-3
13.6 REMOTE HMI COMMUNICATION FAULT ALARM (A700) 13-3
13.7 REMOTE HMI COMMUNICATION ERROR FAULT (F701) 13-3
13.8 AUTO-DIAGNOSIS ALARM (A084) 13-3
13.9 FAULT IN THE CPU (F080) 13-3
13.10 SAVE USER FUNCTION FAULT (F081) 13-3
13.11 COPY FUNCTION FAULT (F082) 13-3
13.12 EXTERNAL ALARM (A090) 13-4
13.13 EXTERNAL FAULT (F091) 13-4
13.14 FAULT HISTORY 13-4
13.15 FAULT AUTO-RESET 13-5

14 READING PARAMETERS 14-1

15 COMMUNICATION 15-1
15.1 SERIAL RS-485 INTERFACE 15-1
15.2 CAN – CANOPEN / DEVICENET INTERFACE 15-2
15.3 COMMANDS AND COMMUNICATION STATUS 15-3

16 SOFTPLC 16-1
16.1 SOFTPLC 16-1

QUICK REFERENCE OF PARAMETERS, ALARMS AND FAULTS

Param.	Description	Adjustable Range	Factory Setting	Prop.	Page
P000	Access to Parameters	0 to 9999	1		5-3
P001	Speed Reference	0 to 9999		ro	14-1
P002	Output Speed (Motor)	0 to 9999		ro	14-1
P003	Motor Current	0.0 to 10.0 A		ro	14-1
P004	DC Link Voltage (Ud)	0 to 524 V		ro	14-1
P005	Output Frequency (Motor)	0.0 to 300.0 Hz		ro	14-1
P006	Inverter Status	0 = Ready 1 = Run 2 = Undervoltage 3 = Fault 4 = Not Used 5 = Configuration		ro	14-2
P007	Output Voltage	0 to 240 V		ro	14-2
P009	Motor Torque	-100.0 to 100.0 %		ro, VVW	14-2
P011	Active Current	-10.0 to 10.0 A		ro	14-3
P012	DI4 to DI1 Status	Bit 0 = DI1 Bit 1 = DI2 Bit 2 = DI3 Bit 3 = DI4		ro	12-6
P013 (*)	DO1 Status	Bit 0 = DO1		ro	12-13
P018 (*)	AI1 Value	-100.0 to 100.0 %		ro	12-1
P022	FI Value in Hz	1 to 3000 Hz		ro	12-4
P023	Main SW Version	0.00 to 99.99		ro	6-1
P024 (*) (**)	Accessory SW Version	0.00 to 99.99		ro	6-1
P027	Plug-in Module Configuration	0 = Without Plug-in 1 = Reserved 2 = CFW100-IOAR 3 = CFW100-CCAN 4 = CFW100-CBLT		ro	6-1
P029	Power HW Configuration	Dig. 1 = Rated Dig. 2 = Rated Current Dig. 3 = Gate Driver	According to the inverter model	ro	6-1
P030	Module Temperature	-200.0 to 200.0 °C		ro	14-3
P037	Motor Overload Ixt	0.0 to 100.0 %		ro	13-2
P047	CONFIG Status	0 to 999		ro	14-3
P048	Present Alarm	0 to 999		ro	13-4
P049	Present Fault	0 to 999		ro	13-4
P050	Last Fault	0 to 999		ro	13-4
P051	Last Fault Current	0.0 to 10.0 A		ro	13-4
P052	Last Fault DC Link	0 to 524 V		ro	13-4
P053	Last Fault Frequency	0.0 to 300.0 Hz		ro	13-5
P054	Last Fault Temperature	0 to 200.0 °C		ro	13-5
P060	Second Fault	0 to 999		ro	13-4
P070	Third Fault	0 to 999		ro	13-4
P100	Acceleration Time	0.1 to 999.9 s	5.0		11-1
P101	Deceleration Time	0.1 to 999.9 s	10.0		11-1
P102	Acceleration Time Ramp 2ª	0.1 to 999.9 s	5.0		11-1
P103	Deceleration Time Ramp 2ª	0.1 to 999.9 s	10.0		11-1
P104	S Ramp	0 = Inactive 1 = Active	0	cfg	11-2

Param.	Description	Adjustable Range	Factory Setting	Prop.	Page
P105	Selection 1st/2nd ramp	0 = 1st Ramp 1 = 2nd Ramp 2 = DIx 3 = Serial/USB 4 = Reserved 5 = CO/DN/DP 6 = SoftPLC	0		11-2
P106	Acceleration Time R. Emer.	0.1 to 999.9 s	5.0 s		11-2
P107	Time Deceleration R. Emer.	0.1 to 999.9 s	5.0 s		11-2
P120	Speed Ref. Backup	0 = Inactive 1 = Active 2 = Backup by P121	1		7-7
P121	Reference via HMI	0.0 to 300.0 Hz	3.0 Hz		7-7
P122	JOG Reference	-300.0 to 300.0 Hz	5.0 Hz		7-8
P124	Multispeed Ref. 1	-300.0 to 300.0 Hz	3.0 Hz		7-8
P125	Multispeed Ref. 2	-300.0 to 300.0 Hz	10.0 (5.0) Hz		7-8
P126	Multispeed Ref. 3	-300.0 to 300.0 Hz	20.0 (10.0) Hz		7-8
P127	Multispeed Ref. 4	-300.0 to 300.0 Hz	30.0 (20.0) Hz		7-8
P128	Multispeed Ref. 5	-300.0 to 300.0 Hz	40.0 (30.0) Hz		7-8
P129	Multispeed Ref. 6	-300.0 to 300.0 Hz	50.0 (40.0) Hz		7-8
P130	Multispeed Ref. 7	-300.0 to 300.0 Hz	60.0 (50.0) Hz		7-8
P131	Multispeed Ref. 8	-300.0 to 300.0 Hz	66.0 (55.0) Hz		7-8
P133	Minimum Frequency	0.0 to 300.0 Hz	3.0 Hz		7-7
P134	Maximum Frequency	0.0 to 300.0 Hz	66.0 (55.0) Hz		7-7
P135	Maximum Output Current	0.0 to 10.0 A	$1.5xI_{nom}$		11-6
P136	Manual Torque Boost	0.0 to 30.0 %	0.0 %	V/f	9-4
P137	Automatic Torque Boost	0.0 to 30.0 %	0.0 %	V/f	9-5
P138	Slip Compensation	-10.0 to 10.0 %	0.0 %	V/f	9-6
P139	Output Current Filter	0 to 9.999 s	0.005 s		8-1
P140	Slip Com. Filter	0 to 9.999 s	0.5 s	VVW	8-1
P142	Maximum Output Voltage	0.0 to 100.0 %	100.0 %	cfg, V/f	9-5
P143	Intermediate Output Voltage	0.0 to 100.0 %	50.0 %	cfg, V/f	9-5
P145	Field Weakening Start Frequency	0.0 to 300.0 Hz	60.0 (50.0) Hz	cfg, V/f	9-5
P146	Intermediate Frequency	0.0 to 300.0 Hz	30.0 (25.0) Hz	cfg, V/f	9-5
P149	DC Link Comp.	0 = Inactive 1 = Active	1	cfg	11-3
P150	Type Ud and LC Regulator	0 = hold_Ud and desac_LC 1 = acel_Ud and desac_LC 2 = hold_Ud and hold_LC 3 = acel_UD and hold_LC	0	cfg	11-4
P151	Ud V/f Regul. Level	325 to 460 V	380 V		11-4
P156	Overload Current	0.1 to $2xI_{nom}$	$1.2xI_{nom}$		13-1
P178	Rated Flux	50.0 to 150.0 %	100.0 %	VVW	10-3
P200	Password	0 = Inactive 1 = Active 2 to 9999 = New Password	0	cfg	5-2
P202	Type of Control	0 = V/f 1 = V/f Quadratic 2 to 4 = Not Used 5 = VVW	0	cfg	8-1
P204	Load/Save Parameters	0 to 4 = Not Used 5 = Load 60 Hz 6 = Load 50 Hz 7 = Load User 8 = Not Used 9 = Save User 10 = Not Used	0	cfg	5-3
P207	Parameter for Bar	0 to 999	3		5-1

Param.	Description	Adjustable Range	Factory Setting	Prop.	Page
P208	Full Scale Ref.	1 to 9999	600 (500)		5-1
P209	Ref. Eng. Unit	0 = Without Unit 1 = Without Unit 2 = Volts (V) 3 = Hertz (Hz) 4 = Without Unit 5 = Percent (%) 6 = Without Unit 7 = Rotation/min. (rpm)	3		5-2
P210	Ref. Indication Form	0 = wxyz 1 = wxy.z 2 = wx.yz 3 = w.xyz	1		5-2
P213	Bar Scale Factor	1 to 9999	52		5-2
P219	Red. Switch. Freq.	0.0 to 15.0 Hz	5.0 Hz		6-2
P220	LOC/REM Selection Source	0 = Always Local 1 = Always Remote 2 to 3 = Not Used 4 = DIx 5 = Serial/USB (LOC) 6 = Serial/USB (REM) 7 to 8 = Not Used 9 = CO/DN (LOC) 10 = CO/DN (REM) 11 = SoftPLC	0	cfg	7-4
P221	LOC Reference Sel.	0 = HMI Keys 1 = AI1 2 to 3 = Not Used 4 = FI 5 to 6 = Not Used 7 = E.P. 8 = Multispeed 9 = Serial/USB 10 = Not Used 11 = CO/DN 12 = SoftPLC 13 = Not Used 14 = AI1 > 0 15 to 16 = Not Used 17 = FI > 0	0	cfg	7-4
P222	REM Reference Sel.	See options in P221	2	cfg	7-4
P223	LOC Rotation Sel.	0 = Always FWD 1 = Always REV 2 = Not Used 3 = Not Used 4 = DIx 5 = Serial/USB (FWD) 6 = Serial/USB (REV) 7 to 8 = Not Used 9 = CO/DN (FWD) 10 = CO/DN (REV) 11 = Not Used 12 = SoftPLC	0	cfg	7-5
P224	LOC Run/Stop Sel.	0 = HMI Keys 1 = DIx 2 = Serial/USB 3 = Not Used 4 = CO/DN 5 = SoftPLC	0	cfg	7-5
P225	LOC JOG Selection	0 = Disable 1 = Not Used 2 = DIx 3 = Serial/USB 4 = Not Used 5 = CO/DN 6 = SoftPLC	1	cfg	7-6
P226	REM Rotation Selection	See options in P223	2	cfg	7-5
P227	REM Run/Stop Selection	See options in P224	3	cfg	7-5

Param.	Description	Adjustable Range	Factory Setting	Prop.	Page
P228	REM JOG Selection	See options in P225	1	cfg	7-6
P229	Stop Mode Selection	0 = Ramp to Stop 1 = Coast to Stop	0	cfg	7-12
P230	Dead Zone (AIs)	0 = Inactive 1 = Active	0	cfg	12-1
P231	AI1 Signal Function	0 = Speed Ref. 1 to 6 = Not Used 7 = Use SoftPLC	0	cfg	12-2
P232	AI1 Input Gain	0.000 to 9.999	1.000		12-2
P233	AI1 Input Signal	0 = 0 to 10 V / 20 mA 1 = 4 to 20 mA 2 = 10 V / 20 mA to 0 3 = 20 to 4 mA	0		12-3
P234	AI1 Input Offset	-100.0 to 100.0 %	0.0		12-2
P235	AI1 Input Filter	0.00 to 16.00 s	0.00		12-2
P245	Input Filter in Freq. FI	0.00 to 16.00 s	0.00 s		12-5
P246	FI Input in Freq.	0 = Inactive 1 = Active	0	cfg	12-5
P247	FI Input Gain	0.000 to 9.999	1.000		12-5
P248	FI Minimum Input	1 to 3000 Hz	100 Hz		12-5
P249	FI Input Offset	-100.0 to 100.0 %	0.0 %		12-5
P250	FI Maximum Input	1 to 3000 Hz	1000 Hz		12-5
P263	DI1 Input Function	0 = Not Used 1 = Run/Stop 2 = General Enable 3 = Quick Stop 4 = Forward Run 5 = Reverse Run 6 = Start 7 = Stop 8 = FWD/REV 9 = LOC/REM 10 = JOG 11 = Increase E.P. 12 = Decelerate E.P. 13 = Multispeed 14 = 2nd Ramp 15 to 17 = Not Used 18 = No Ext. Alarm 19 = No Ext. Fault 20 = Reset 21 to 23 = Not Used 24 = Disab. Flying Start 25 = Regul. DC Link 26 = Lock Prog. 27 to 31 = Not Used 32 = 2nd Ramp Multispeed 33 = 2nd Ramp E.P. Ac. 34 = 2nd Ramp E.P. De. 35 = 2nd Ramp FRW Run 36 = 2nd Ramp Rev Run 37 = Turn ON / Ac. E.P. 38 = De. E.P. / Turn OFF 39 = Stop 40 = Safety Switch 41 = Function 1 Application 42 = Function 2 Application 43 = Function 3 Application 44 = Function 4 Application 45 = Function 5 Application 46 = Function 6 Application 47 = Function 7 Application 48 = Function 8 Application	1	cfg	12-6
P264	DI2 Input Function	See options in P263	8	cfg	12-6
P265	DI3 Input Function	See options in P263	0	cfg	12-6
P266	DI4 Input Function	See options in P263	0	cfg	12-6

Param.	Description	Adjustable Range	Factory Setting	Prop.	Page
P275 (*)	DO1 Output Function	0 = Not Used 1 = F* ≥ Fx 2 = F ≥ Fx 3 = F ≤ Fx 4 = F = F* 5 = Not Used 6 = Is > Ix 7 = Is < Ix 8 to 9 = Not Used 10 = Remote 11 = Run 12 = Ready 13 = No Fault 14 = No F070 15 = Not Used 16 = No F021/F022 17 = Not Used 18 = No F072 19 = 4-20 mA OK 20 = Not Used 21 = Forward 22 to 23 = Not Used 24 = Ride-Through 25 = Pre-Charge OK 26 = Fault 27 = Not Used 28 = SoftPLC 29 to 34 = Not Used 35 = No Alarm 36 = No Fault/ Alarm 37 = Function 1 Application 38 = Function 2 Application 39 = Function 3 Application 40 = Function 4 Application 41 = Function 5 Application 42 = Function 6 Application 43 = Function 7 Application 44 = Function 8 Application	13		12-13
P281 (*)	Fx Frequency	0.0 to 300.0 Hz	3.0 Hz		12-14
P282 (*)	Fx Hysteresis	0.0 to 300.0 Hz	0.5 Hz		12-14
P290 (*)	Ix Current	0 to 10.0 A	$1.0xI_{nom}$		12-15
P295	Inv. Rated Current	1.6 to 15.2 A	According to inverter model	ro	6-2
P296	Line Rated Voltage	0 to 1 = Reserved 2 = 200 - 240 V	2	ro, cfg	6-2
P297	Switching Frequency	2.5 to 15.0 kHz	5.0 kHz		6-2
P299	Start Braking Time	0.0 to 15.0 s	0.0 s		11-8
P300	Stop Braking Time	0.0 to 15.0 s	0.0 s		11-9
P301	Start Frequency	0.0 to 300.0 Hz	3.0 Hz		11-9
P302	DC Braking Voltage	0.0 to 100.0 %	20.0 %		11-9
P303	Skip Frequency 1	0.0 to 300.0 Hz	0.0 Hz		11-10
P304	Skip Frequency 2	0.0 to 300.0 Hz	0.0 Hz		11-10
P306	Skip Band	0.0 to 25.0 Hz	0.0 Hz		11-10
P308	Serial Address	1 to 247	1	cfg	15-1
P310	Communication Rate. Serial	0 = 9600 bits/s 1 = 19200 bits/s 2 = 38400 bits/s		cfg	15-1
P311	Serial Bytes Config.	0 = 8 bits, no, 1 1 = 8 bits, even, 1 2 = 8 bits, odd, 1 3 = 8 bits, no, 2 4 = 8 bits, even, 2 5 = 8 bits, odd, 2	1	cfg	15-1
P312	Serial Protocol	0 to 1 = Reserved 2 = Modbus RTU (RS-485)	2	cfg	15-1

Param.	Description	Adjustable Range	Factory Setting	Prop.	Page
P313	Communic. Error Action	0 = Inactive 1 = Ramp Stop 2 = General Disable 3 = Go to LOC 4 = LOC Keep Enab 5 = Cause Fault	1		15-1
P314	Serial Watchdog	0.0 to 999.9 s	0.0 s	cfg	15-1
P316	Serial Interf. Status	0 = Inactive 1 = Active 2 = Watchdog Error		ro	15-1
P320	Flying Start/Ride-Through	0 = Inactive 1 = Flying Start 2 = FS / RT 3 = Ride-Through	0	cfg	11-6
P331	Voltage Ramp	0.2 to 60.0 s	2.0 s		11-7
P332	Dead time	0.1 to 10.0 s	1.0 s		11-7
P340	Auto-Reset Time	0 to 255 s	0 s		13-5
P397	Regener. Slip Compens.	0 = Inactive 1 = Active	1	cfg	8-2
P399	Motor Rated Efficiency	50.0 to 99.9 %	67.0 %	cfg, VVW	10-3
P400	Motor Rated Voltage	0 to 240 V	220 (230)	cfg, VVW	10-4
P401	Motor Rated Current	0.0 to 10.0 A	1.4 A	cfg	10-4
P402	Motor Rated Speed	0 to 9999 rpm	1720 (1310) rpm	cfg	10-4
P403	Motor Rated Frequency	0 to 300 Hz	60 (50) Hz	cfg	10-4
P404	Motor Rated Power	0 = 0.16 HP (0.12 kW) 1 = 0.25 HP (0.19 kW) 2 = 0.33 HP (0.25 kW) 3 = 0.50 HP (0.37 kW) 4 = 0.75 HP (0.55 kW) 5 = 1.00 HP (0.75 kW)	2	cfg, VVW	10-4
P407	Motor Rated Power Factor	0.50 to 0.99	0.69	cfg, VVW	10-5
P409	Stator Resistance	0.01 to 99.99	10.63	cfg, VVW	10-5
P680	Logical Status	Bit 0 to 4 = Reserved Bit 5 = 2nd Ramp Bit 6 = Config. status Bit 7 = Alarm Bit 8 = Running Bit 9 = Enabled Bit 10 = Forward Bit 11 = JOG Bit 12 = Remote Bit 13 = Undervoltage Bit 14 = Reserved Bit 15 = Fault		ro	7-11
P681	Speed in 13 bits	-32768 to 32767		ro	15-1 15-3
P682	Serial/USB Control	Bit 0 = Ramp Enable Bit 1 = General Enable Bit 2 = Run Forward Bit 3 = JOG Enable Bit 4 = Remote Bit 5 = 2nd Ramp Bit 6 = Reserved Bit 7 = Fault Reset Bit 8 to 15 = Reserved		ro	7-11
P683	Serial/USB Speed Ref.	-32768 to 32767		ro	15-1
P684 (**)	CO/DN Control	See options in P682		ro	15-2
P685 (**)	CO/DN Speed Ref.	-32768 to 32767		ro	15-2
P700 (**)	CAN Protocol	1 = CANopen 2 = DeviceNet	1		15-2
P701 (**)	CAN Address	0 to 127	63		15-2

Param.	Description	Adjustable Range	Factory Setting	Prop.	Page
P702 (**)	CAN Baud Rate	0 = 1 Mbps/Auto 1 = Reserved/Auto 2 = 500 Kbps 3 = 250 Kbps 4 = 125 Kbps 5 = 100 Kbps/Auto 6 = 50 Kbps/Auto 7 = 20 Kbps/Auto 8 = 10 Kbps/Auto	0		15-2
P703 (**)	Bus Off Reset	0 = Manual 1 = Automatic	1		15-2
P705 (**)	CAN Controller Status	0 = Inactive 1 = Auto-baud 2 = CAN Active 3 = Warning 4 = Error Passive 5 = Bus Off 6 = No Bus Power		ro	15-2
P706 (**)	CAN RX Telegrams	0 to 65535		ro	15-2
P707 (**)	CAN TX Telegrams	0 to 65535		ro	15-2
P708 (**)	Bus Off Counter	0 to 65535		ro	15-2
P709 (**)	CAN Lost Messages	0 to 65535		ro	15-2
P710 (**)	DeviceNet I/O Instances	0 = ODVA Basic 2W 1 = ODVA Extend 2W 2 = Manuf. Spec. 2W 3 = Manuf. Spec. 3W 4 = Manuf. Spec. 4W 5 = Manuf. Spec. 5W 6 = Manuf. Spec. 6W			15-2
P711 (**)	DeviceNet Reading #3	0 to 1199	0		15-2
P712 (**)	DeviceNet Reading #4	0 to 1199	0		15-2
P713 (**)	DeviceNet Reading #5	0 to 1199	0		15-2
P714 (**)	DeviceNet Reading #6	0 to 1199	0		15-2
P715 (**)	DeviceNet Writing #3	0 to 1199	0		15-2
P716 (**)	DeviceNet Writing #4	0 to 1199	0		15-2
P717 (**)	DeviceNet Writing #5	0 to 1199	0		15-3
P718 (**)	DeviceNet Writing #6	0 to 1199	0		15-3
P719 (**)	DeviceNet Network Status	0 = Offline 1 = OnLine, Not Conn. 2 = OnLine Connect. 3 = Connection Timed out 4 = Link Failure 5 = Auto-Baud	5	ro	15-3
P720 (**)	DNet Master Status	0 = Run 1 = Idle		ro	15-3
P721 (**)	CANopen Com. Status	0 = Disabled 1 = Reserved 2 = Communic. Enabled 3 = Error Ctrl. Enable 4 = Guarding Error 5 = Heartbeat Error		ro	15-3 15-3
P722 (**)	CANopen Node Status	0 = Disabled 1 = Initialization 2 = Stopped 3 = Operational 4 = Preoperational		ro	15-3 15-3
P770 (***)	Bluetooth Name	0 to 9999	Serial Number of inverter	cfg	15-1
P771 (***)	Bluetooth Password	0 to 9999	1234	cfg	15-2
P900	SoftPLC Status	0 = No App. 1 = Installing App. 2 = Incompat. App. 3 = App. Stopped 4 = App. Running			16-1

Param.	Description	Adjustable Range	Factory Setting	Prop.	Page
P901	SoftPLC Command	0 = Stop Program 1 = Run Program 2 = Delete Program	0	cfg	16-1
P902	Scan Cycle Time	0 to 9.999 s		ro	16-1
P910	SoftPLC Parameter 1	-9999 to 9999	0		16-1
P911	SoftPLC Parameter 2	-9999 to 9999	0		16-1
P912	SoftPLC Parameter 3	-9999 to 9999	0		16-1
P913	SoftPLC Parameter 4	-9999 to 9999	0		16-1
P914	SoftPLC Parameter 5	-9999 to 9999	0		16-1
P915	SoftPLC Parameter 6	-9999 to 9999	0		16-1
P916	SoftPLC Parameter 7	-9999 to 9999	0		16-1
P917	SoftPLC Parameter 8	-9999 to 9999	0		16-1
P918	SoftPLC Parameter 9	-9999 to 9999	0		16-1
P919	SoftPLC Parameter 10	-9999 to 9999	0		16-1
P920	SoftPLC Parameter 11	-9999 to 9999	0		16-1
P921	SoftPLC Parameter 12	-9999 to 9999	0		16-1
P922	SoftPLC Parameter 13	-9999 to 9999	0		16-1
P923	SoftPLC Parameter 14	-9999 to 9999	0		16-1
P924	SoftPLC Parameter 15	-9999 to 9999	0		16-1
P925	SoftPLC Parameter 16	-9999 to 9999	0		16-1
P926	SoftPLC Parameter 17	-9999 to 9999	0		16-1
P927	SoftPLC Parameter 18	-9999 to 9999	0		16-1
P928	SoftPLC Parameter 19	-9999 to 9999	0		16-1
P929	SoftPLC Parameter 20	-9999 to 9999	0		16-1
P930	SoftPLC Parameter 21	-9999 to 9999	0		16-1
P931	SoftPLC Parameter 22	-9999 to 9999	0		16-1
P932	SoftPLC Parameter 23	-9999 to 9999	0		16-1
P933	SoftPLC Parameter 24	-9999 to 9999	0		16-1
P934	SoftPLC Parameter 25	-9999 to 9999	0		16-1
P935	SoftPLC Parameter 26	-9999 to 9999	0		16-1
P936	SoftPLC Parameter 27	-9999 to 9999	0		16-1
P937	SoftPLC Parameter 28	-9999 to 9999	0		16-1
P938	SoftPLC Parameter 29	-9999 to 9999	0		16-1
P939	SoftPLC Parameter 30	-9999 to 9999	0		16-1
P940	SoftPLC Parameter 31	-9999 to 9999	0		16-1
P941	SoftPLC Parameter 32	-9999 to 9999	0		16-1
P942	SoftPLC Parameter 33	-9999 to 9999	0		16-1
P943	SoftPLC Parameter 34	-9999 to 9999	0		16-1
P944	SoftPLC Parameter 35	-9999 to 9999	0		16-1
P945	SoftPLC Parameter 36	-9999 to 9999	0		16-1
P946	SoftPLC Parameter 37	-9999 to 9999	0		16-1
P947	SoftPLC Parameter 38	-9999 to 9999	0		16-1
P948	SoftPLC Parameter 39	-9999 to 9999	0		16-1
P949	SoftPLC Parameter 40	-9999 to 9999	0		16-1
P950	SoftPLC Parameter 41	-9999 to 9999	0		16-1
P951	SoftPLC Parameter 42	-9999 to 9999	0		16-1
P952	SoftPLC Parameter 43	-9999 to 9999	0		16-1
P953	SoftPLC Parameter 44	-9999 to 9999	0		16-1
P954	SoftPLC Parameter 45	-9999 to 9999	0		16-1
P955	SoftPLC Parameter 46	-9999 to 9999	0		16-1

Param.	Description	Adjustable Range	Factory Setting	Prop.	Page
P956	SoftPLC Parameter 47	-9999 to 9999	0		16-1
P957	SoftPLC Parameter 48	-9999 to 9999	0		16-1
P958	SoftPLC Parameter 49	-9999 to 9999	0		16-1
P959	SoftPLC Parameter 50	-9999 to 9999	0		16-1

(*) Available only when the CFW100-IOAR accessory is present (connected).
(**) Available only when the CFW100-CCAN accessory is present (connected).
(***) Available only when the CFW100-CBLT accessory is present (connected).

Notes:
ro = Read only parameter.
V/f = Parameter available in V/f mode.
cfg = Configuration parameter, value can only be changed with the motor stopped.
VVW = Parameter available in VVW mode.

Fault / Alarm	Description	Possible Causes
A046 Motor Overload	Motor overload alarm.	■ Settings of P156 is too low for the used motor. ■ Overload on the motor shaft.
A050 Power Module Overtemperature	Overtemperature alarm from the power module temperature sensor (NTC).	■ High temperature at IGBTs (P030 > 110 °C). ■ High ambient temperature around the inverter (>50 °C (> 122 °F)) and high output current. ■ Blocked or defective fan. ■ Heatsink is too dirty, preventing the air flow.
A090 External Alarm	External alarm via DIx (option “No External Alarm” in P26x).	■ Wiring on DI1 to DI4 inputs are open or have poor contact.
A128 Telegram Reception Timeout	Alarm that indicates serial communication fault. It indicates the equipment stopped receiving valid serial telegrams for a period longer than the setting in P314.	■ Check network installation, broken cable or fault/poor contact on the connections with the network, grounding. ■ Ensure the master always sends telegrams to the equipment in a time shorter than the setting in P314. ■ Disable this function in P314.
A133 No power supply on the CAN interface	It indicates that the CAN interface has no power supply between pins 1 and 5 of the connector.	■ Measure if there is voltage within the allowed range between pins 1 and 5 of the CAN interface connector. ■ Check if the power supply cables are not misconnected or inverted. ■ Check for contact problems on the cable or connector of the CAN interface.
A134 Bus Off	Buss off error detected on the CAN interface.	■ Check for short circuit on the CAN circuit transmission cable. ■ Check if the cables are not misconnected or inverted. ■ Check if all the network devices use the same baud rate. ■ Check if the termination resistors with the right specification were installed only at the end of the main bus. ■ Check if the CAN network was properly installed.
A135 Node Guarding/ Heartbeat	CANopen communication error control detected communication error using the guarding mechanism.	■ Check the times set on the master and on the slave for message exchange. In order to prevent problems due to transmission delays and time counting, it is recommended that the values set for error detection by the slave be multiples of the times set for message exchange on the master. ■ Check if the master is sending the guarding telegrams in the time set. ■ Check problems in the communication that may cause missing telegrams or transmission delays.
A163 Signal Fault AI1	Analog input signal AI1 at 4 to 20 mA or 20 to 4 mA is below 4-20 mA.	■ Cable of AI1 broken. ■ Poor contact at the signal connection on the terminals.
A700 Remote HMI Communication Fault	No communication with remote HMI, but here is frequency command or reference for this source.	■ Check if the communication interface with the HMI is properly configured in parameter P312. ■ HMI cable disconnected.
A702 Inverter Disabled	This failure occurs when there is a SoftPLC movement block (REF block) active and the “General Enable” command is disabled.	■ Check if the drive General Enable command is active.
A704 Two Movem. Enabled	It occurs when 2 or more SoftPLC movement blocks (REF Block) are enabled at the same time.	■ Check the user’s program logic.
A706 Refer. Nao Progr. SPLC	This failure occurs when a SoftPLC movement block is enabled and the speed reference is not programmed for the SoftPLC.	■ Check the programming of the references in the Local and/or Remote mode (P221 and P222).
A712 SPLC protected against copy	It occurs when there is an attempt to copy the SoftPLC application protected against copies.	■ Attempt to copy WLP application protected against copies (“never permit copies”). ■ Attempt to copy WLP from a copy protected against copies (“no permission to copy from a copy”)
F021 Undervoltage on the DC Link	Undervoltage fault on the intermediate circuit.	■ Wrong voltage supply; check if the data on the inverter label comply with the power supply and parameter P296. ■ Supply voltage too low, producing voltage on the DC link below the minimum value (in P004): Ud < 200 Vdc in 200 / 240 Vac. ■ Phase fault in the input. ■ Fault in the pre-charge circuit.

Fault / Alarm	Description	Possible Causes
F022 Overvoltage on the DC Link	Overvoltage fault on the intermediate circuit.	■ Wrong voltage supply; check if the data on the inverter label comply with the power supply and parameter P296. ■ Supply voltage is too high, producing voltage on the DC link above the maximum value (in P004): Ud > 410 Vdc in 200 / 240 Vac. ■ Load inertia is too high or deceleration ramp is too fast. ■ P151 setting is too high.
F033 VVW Self-tuning Fault	Stator resistance setting fault P409.	■ Stator resistance value in P409 does not comply with the inverter power. ■ Motor connection error; turn off the power supply and check the motor terminal box and the connections with the motor terminals. ■ Motor power too low or too high in relation to the inverter.
F051 IGBTs Overtemperatures	Overtemperature fault measured on the temperature sensor of the power pack.	■ High temperature at IGBTs (P030 > 120 °C). ■ High ambient temperature around the inverter (>50 °C (>122 °F)) and high output current. ■ Blocked or defective fan. ■ Heatsink is too dirty, preventing the air flow.
F070 Overcurrent/Shortcircuit	Overcurrent or short-circuit on the output, DC link or braking resistor.	■ Short-circuit between two motor phases. ■ IGBTs module in short-circuit or damaged. ■ Start with too short acceleration ramp. ■ Start with motor spinning without the Flying Start function.
F072 Motor Overload	Motor overload fault (60 s in 1.5xInom)	■ P156 setting is too low in relation to the motor operating current. ■ Overload on the motor shaft.
F080 CPU Fault (Watchdog)	Fault related to the supervision algorithm of the inverter main CPU.	■ Electric noise. ■ Inverter firmware fault.
F081 Fault on the Save User function	Fault in the attempt to save the User parameter table.	■ Attempt to save (P204 = 9) more than 32 parameters (with values different from the factory default) on the User parameter table. ■ The function Saves User is blocked.
F082 Fault in the Copy Function (MMF)	Fault in the copy of parameters.	■ Attempt to copy the parameters from the Flash Memory Module to the inverter with different software versions.
F084 Auto-diagnosis Fault	Fault related to the automatic identification algorithm of the inverter hardware.	■ Poor contact in the connection between the main control anthe power pack. ■ Hardware not compatible with the firmware version. ■ Defect on the internal circuits of the inverter.
F091 External Fault	External fault via DIx ("No External Fault" in P26x).	■ Wiring on DI1 to DI4 inputs are open or have poor contact.
F228 Timeout in receipt of telegrams	Indicates fault in the serial communication. It indicates the equipment stopped receiving valid serial telegrams for a period longer than the setting in P314.	■ Check network installation, broken cable or fault/poor contact on the connections with the network, grounding. ■ Ensure the master always sends telegrams to the equipment in a time shorter than the setting in P314. ■ Disable this function in P314.
F233 No power supply on the CAN interface	It indicates that the CAN interface has no power supply between pins 1 and 5 of the connector.	■ Measure if there is voltage within the allowed range between pins 1 and 5 of the CAN interface connector. ■ Check if the power supply cables are not misconnected or inverted. ■ Check for contact problems on the cable or connector of the CAN interface.
F234 Bus Off	Buss off error detected on the CAN interface.	■ Check for short circuit on the CAN circuit transmission cable. ■ Check if the cables are not misconnected or inverted. ■ Check if all the network devices use the same baud rate. ■ Check if the termination resistors with the right specification were installed only at the end of the main bus. ■ Check if the CAN network was properly installed.
F235 Node Guarding/ Heartbeat	CANopen communication error control detected communication error using the guarding mechanism.	■ Check the times set on the master and on the slave for message exchange. In order to prevent problems due to transmission delays and time counting, it is recommended that the values set for error detection by the slave be multiples of the times set for message exchange on the master. ■ Check if the master is sending the guarding telegrams in the time set. ■ Check problems in the communication that may cause missing telegrams or transmission delays.

Fault / Alarm	Description	Possible Causes
F701 Remote HMI communication fault	No communication with the remote HMI; however, there is command or frequency reference for this source.	■ Check that the HMI communication interface is properly configured in parameter P312. ■ HMI cable disconnected.
F710 SPLC Progr. bigger than 5 KB	No communication with the remote HMI however, there is no command or frequency reference for this source.	■ Extension of the SoftPLC Prog. exceeded 5 KBytes.
F711 The upload of the SoftPLC application failed	The upload or the SoftPLC application failed.	■ The CPU failed to boot the SoftPLC. ■ Incompatible application uploaded (P900 = 2) and command for application (P901 = 0).

1 SAFETY INSTRUCTIONS

This manual contains the information necessary for the correct setting of the frequency inverter CFW100.

It was developed to be used by people with proper technical training or qualification to operate this kind of equipment. These people must follow the safety instructions defined by local standards. The noncompliance with the safety instructions may result in death risk and/or equipment damage.

1.1 SAFETY WARNINGS IN THIS MANUAL

DANGER!
The procedures recommended in this warning have the purpose of protecting the user against death, serious injuries and considerable material damage.

DANGER!
Les procédures concernées par cet avertissement sont destinées à protéger l'utilisateur contre des dangers mortels, des blessures et des détériorations matérielles importantes.

ATTENTION!
The procedures recommended in this warning have the purpose of avoiding material damage.

NOTE!
The information mentioned in this warning is important for the proper understanding and good operation of the product.

1.2 SAFETY WARNINGS IN THE PRODUCT

The following symbols are fixed to the product, as a safety warning:

High voltages present.

Components sensitive to electrostatic discharge.
Do not touch them.

Mandatory connection to the protective earth (PE).

Connection of the shield to the ground.

Hot surface.

1.3 PRELIMINARY RECOMMENDATIONS

DANGER!
Only qualified personnel, familiar with the CFW100 inverter and related equipment must plan or perform the installation, start-up, operation and maintenance of this equipment.
The personnel must follow the safety instructions described in this manual and/or defined by local standards.
The noncompliance with the safety instructions may result in death risk and/or equipment damage.

DANGER!
Seulement personnes avec la qualification adéquate et familiarisation avec le CFW100 et équipements associés doivent planifiquer ou implementer l'installation, mise en marche, operation et entretien de cet équipement.
Cettes personnes doivent suivre toutes les instructions de sécurités indiquées dans ce manuel, et/ou définies par normes locales.
L'inobservance des instructions de sécurité peut résulter en risque de vie et/ou dommages de cet équipement.

NOTE!
For the purposes of this manual, qualified personnel are those trained in order to be able to:
1. Install, ground, power up and operate the CFW100 in accordance with this manual and the safety legal procedures in force.
2. Use the protective equipment in accordance with the relevant standards.
3. Give first aid.

DANGER!
Always disconnect the general power supply before touching any electric component associated to the inverter.
Many components may remain loaded with high voltages and/or moving (fans), even after the AC power supply input is disconnected or turned off. Wait for at least ten minutes in order to guarantee the full discharge of the capacitors. Always connect the frame of the equipment to the protective earth (PE) at the proper point for that.

DANGER!
Débranchez toujours l'alimentation principale avant d'entrer en contact avec un appareil électrique associé au variateur. Plusieurs composants peuvent rester chargés à un potentiel électrique élevé et/ou être en mouvement (ventilateurs), même après la déconnexion ou la coupure de l'alimentation en courant alternatif.
Attendez au moins 10 minutes que les condensateurs se déchargent complètement.
Raccordez toujours la masse de l'appareil à une terre protectrice (PE).

ATTENTION!
Electronic boards have components sensitive to electrostatic discharge. Do not touch directly the component parts or connectors. If necessary, first touch the grounded metallic frame or use proper grounding strap.

Do not execute any applied potential test on the inverter!
If necessary, contact WEG.

NOTE!

- Frequency inverters may interfere in other electronic equipments. Observe the recommendations of chapter 3 Installation and Connection of the user's manual in order to minimize these effects.
- Read the user's manual completely before installing or operating this inverter.

2 GENERAL INFORMATION

2.1 ABOUT THE MANUAL

This manual presents information necessary for the configuration of all the functions and parameters of the frequency inverter CFW100. This manual must be used together with the user's manual of the CFW100.

The text provides additional information so as simplify the use and programming of the CFW100 in certain applications.

2.2 TERMINOLOGY AND DEFINITIONS

2.2.1 Terms and Definitions Used

I_{nom}: inverter rated current by P295.

Rectifier: input circuit of the inverters that transforms the input AC voltage into DC. It is formed by high-power diodes.

IGBT: insulated gate bipolar transistor - basic component part of the output inverter bridge. It works as an electronic switch in the saturated (closed switch) and cut-off (open switch) modes.

DC Link: intermediary circuit of the inverter; voltage in direct current obtained by rectifying the power supply alternate voltage or external supply; it supplies the output inverter bridge with IGBTs.

Pre-Charge Circuit: charges the capacitors of the DC link with limited current, avoiding current peaks in the inverter power-up.

NTC: resistor whose resistance value in ohms decreases proportionally to the increase of the temperature; it is used as a temperature sensor in power packs.

HMI: human-machine interface; device which allows controlling the motor, viewing and changing the inverter parameters. It features keys to control the motor, navigation keys and graphic LCD display.

PE: protective earth.

PWM: pulse width modulation - modulation by pulse width; pulsed voltage that supplies the motor.

Switching Frequency: switching frequency of the IGBTs of the inverter bridge, normally expressed in kHz.

General Enable: when activated, it accelerates the motor by acceleration ramp and Run/Stop = Run. When disabled, the PWM pulses will be immediately blocked. It may be controlled by digital input set for this function or via serial.

Run/Stop: inverter function which, when activated (run), accelerates the motor by acceleration ramp up to the reference frequency and, when deactivated (stop), decelerates the motor by deceleration ramp. It may be controlled by digital input set for this function or via serial.

Heatsink: metal part designed to dissipate the heat produced by power semiconductors.

Amp, A: ampere; unit of measurement of electric current.

°C: celsius degrees; unit of measurement of temperature.

CA: alternate current.

CC: direct current.

CV: cavalo-vapor = 736 Watts (Brazilian unit of measurement of power, normally used to indicate mechanical power of electric motors).

hp (HP): horse power = 746 Watts (unit of measurement of power, normally used to indicate mechanical power of electric motors).

Hz: hertz; unit of measurement of frequency.

kHz: kilohertz = 1000 Hertz.

mA: miliampere = 0.001 ampere.

Nm: Newton meter; unit of torque.

rms: root mean square; effective value.

rpm: revolutions per minute; unit of measurement of rotation.

s: second; unit of measurement of time.

V: volts; unit of measurement of electric voltage.

Ω: ohms; unit of measurement of electric resistance.

2.2.2 Numerical Representation

The decimal numbers are represented by means of digits without suffix. Parameters P012, P680 and P682 are represented in hexadecimal numbers.

3 ABOUT THE CFW100

3.1 ABOUT THE CFW100

The frequency inverter CFW100 is a high performance product which enables speed and torque control of three-phase induction motors. This product provides the user with the options of vector (VVW) or scalar (V/f) control, both programmable according to the application.

In the vector mode (VVW), the operation is optimized for the used motor, providing a better performance in terms of speed regulation torque.

The scalar mode (V/f) is recommended for simpler applications, such as the activation of most pumps and fans. In those cases, it is possible to reduce the motor and inverter losses using the option “Quadratic V/f”, which results in energy saving. The V/f mode is used when more than a motor is activated by an inverter simultaneously (multi-motor applications).

The main components of the CFW100 can be viewed in the block diagram of Figure 3.1 on page 3-1 and Figure 3.2 on page 3-2. The mechanical project was designed to simplify the connection and maintenance, as well as to ensure the safety of the product.

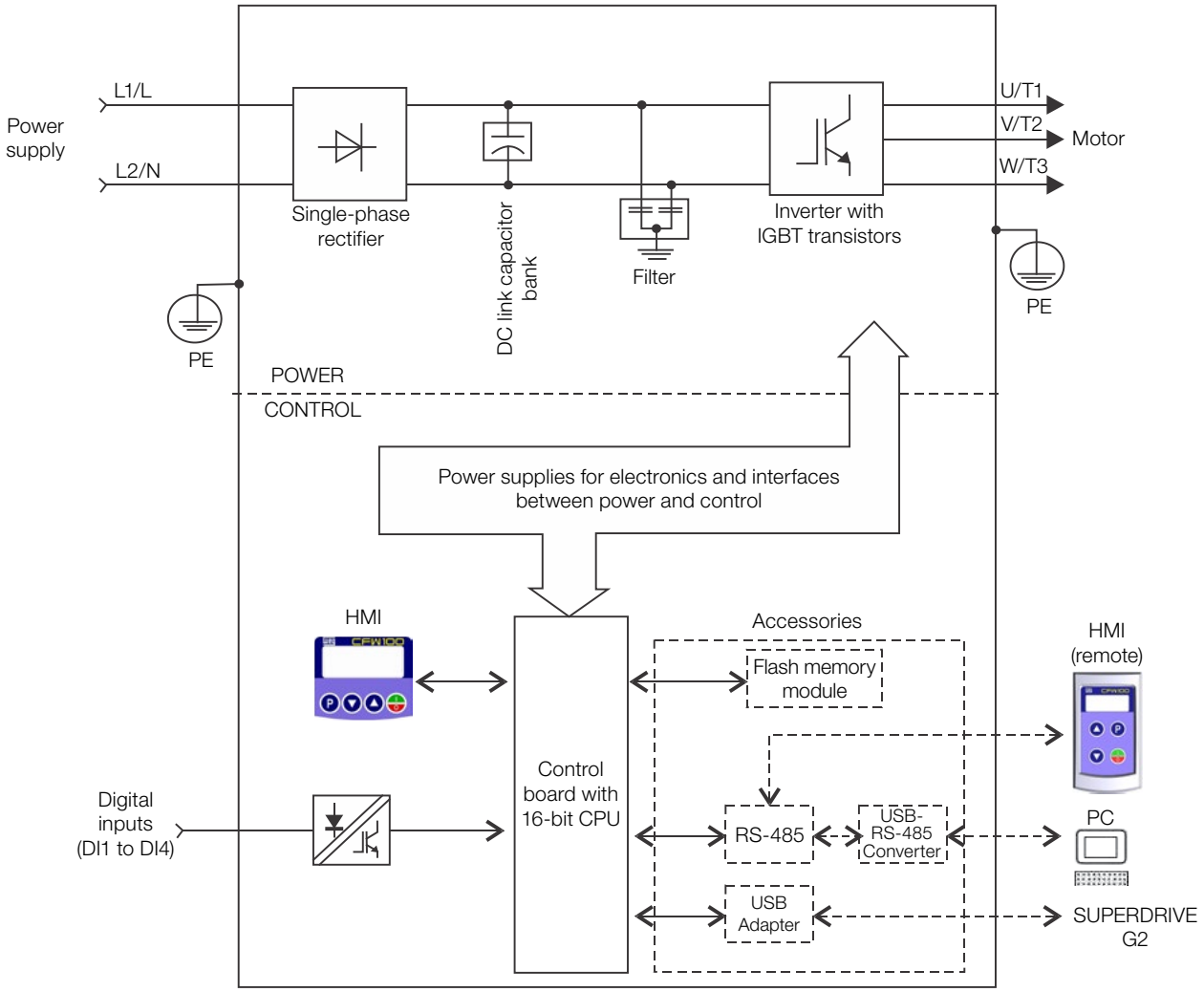

Figure 3.1: *CFW100 block diagram*

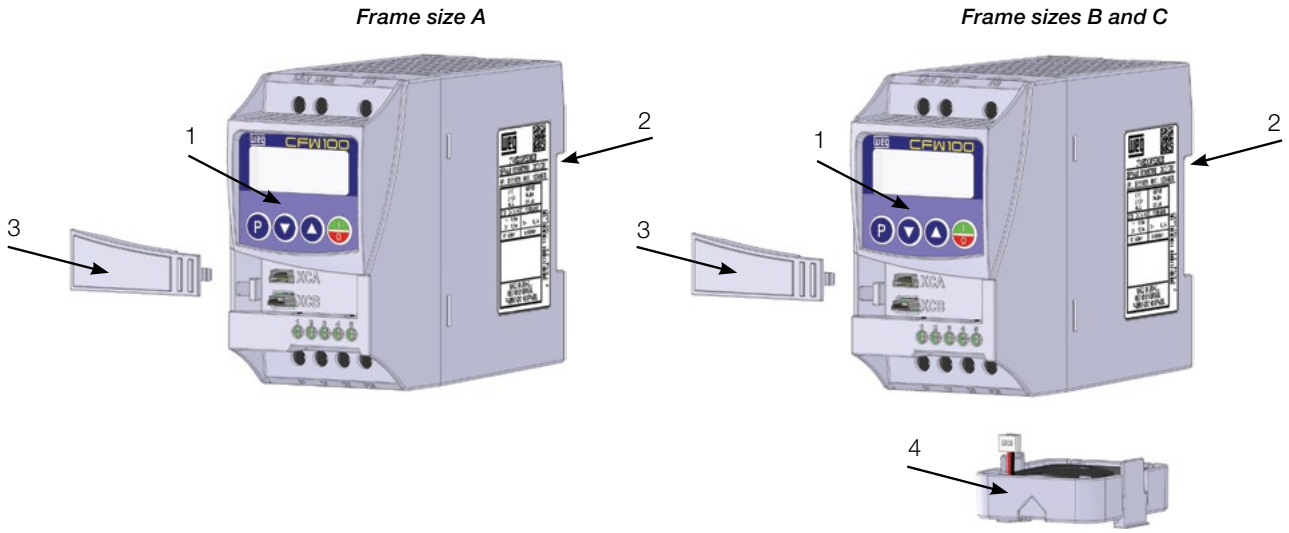

1 – HMI
2 – Mounting bracket (DIN-rail mountingN)
3 – Front cover
4 – Fan with mounting bracket

Figure 3.2: *Main components of the CFW100*

4 HMI AND BASIC PROGRAMMING

4.1 USE OF THE HMI TO OPERATE THE INVERTER

Using the HMI, it is possible to command the inverter, view and adjust all of its parameters. The HMI presents the following functions:

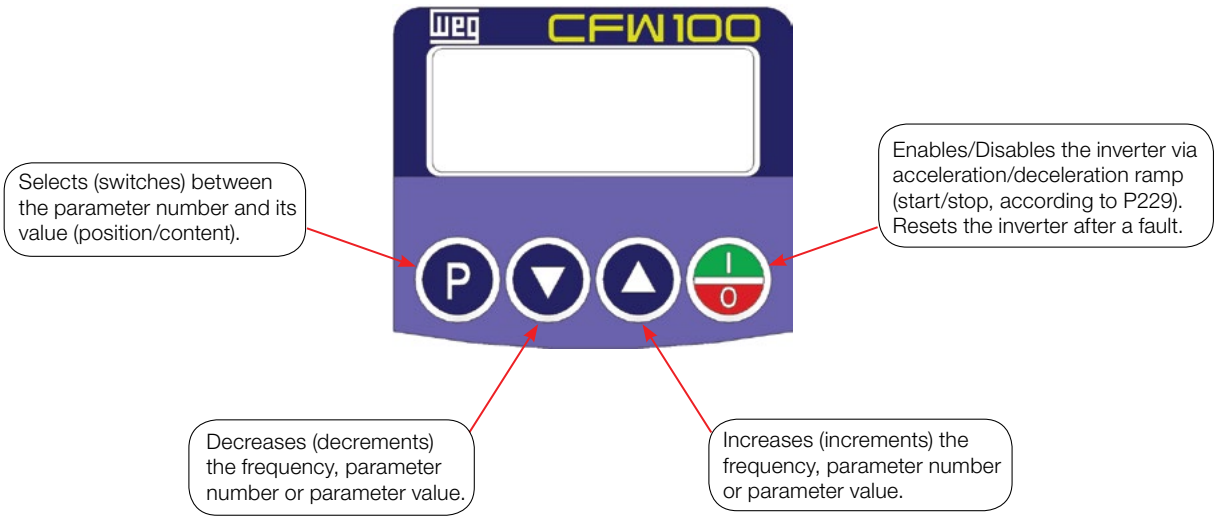

Figure 4.1: *HMI keys*

4.2 INDICATIONS ON THE HMI DISPLAY

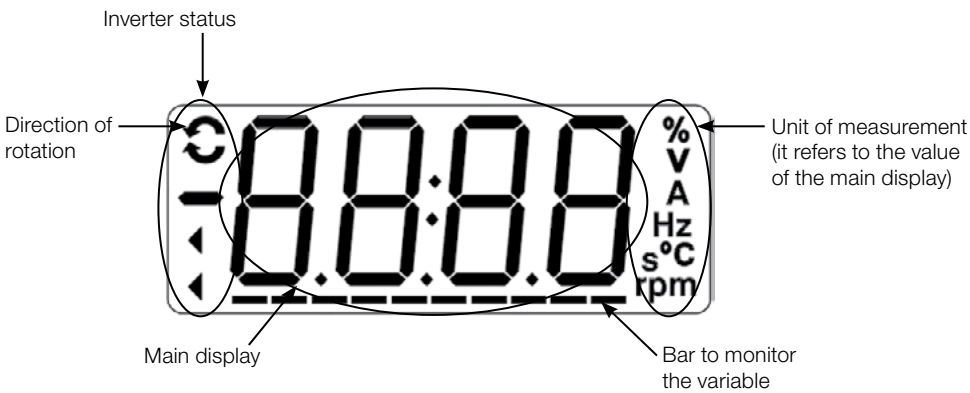

Figure 4.2: *Display areas*

4.3 OPERATING MODES OF THE HMI

When inverter is powered-up, the initial state of the HMI remains in the start-up mode as long as no faults, alarms, undervoltages occur or no keys are pressed.

The setting mode is composed of two levels: Level 1 allows browsing the parameters. Level 2 allows the modification of the parameter selected in level 1. At the end of this level, the modified value is saved when the key P is pressed.

The Figure 4.3 on page 4-2 illustrates the basic browsing of the operating modes of the HMI.

Start-up Mode		
■ It is the initial status of the HMI after the successful power-up (without fault, alarms or undervoltages). ■ Press the P key to go to level 1 of the setting mode – parameter selection. Pressing any other key will also change to the setting mode.	rdY	Monitoring P Parameterization Level 1 P P Parameterization Level 2
Setting Mode		
Level 1: ■ This is the first level of the setting mode. The number of the parameter is shown on the main display. ■ Use the ▲ and ▼ keys to find the desired parameter. ■ Press the P key to go to level 2 of the setting mode – modification of the parameter content.	P002 Hz	
Level 2: ■ The content of the parameter is shown on the main display. ■ Use the ▲ and ▼ keys to confi gure the new value for the selected parameter. ■ Press the P key to confirm the modification (save the new value). After the change is confirmed, the HMI returns to level 1 of the setting mode.	0.0 Hz	

Figure 4.3: *HMI operating modes*

NOTE!
When the inverter is in the fault state, the main display indicates the number of the fault in the format **Fxxx**. The browsing is allowed after pressing the P key.

NOTE!
When the inverter is in the alarm state, the main display indicates the number of the alarm in the format **Axxx**. The browsing is allowed after pressing the P key, and then the indication "**A**" is displayed on the Unit of measurement display, flashing until the situation causing the alarm is solved.

5 PROGRAMMING BASIC INSTRUCTIONS

NOTE!
The inverter comes from the factory with the frequency (V/f 50/60 Hz mode) and voltage adjusted according to the market.
The reset to factory default may change the content of the parameters related to frequency. In the detailed description, some parameters have values between brackets, which represents the default value for operation in 50 Hz; thus the value without brackets is the default for operation in 60 Hz.

5.1 SETTING OF DISPLAY INDICATIONS

Whenever the inverter is powered up, the HMI display goes to the start-up mode if no faults, alarms or undervoltages are present. In order to simplify the reading of the inverter parameters, the display was designed to show two parameters simultaneously, at the user's discretion. One of those parameters (main display) is shown in the numeric form and the other parameter as a bar graph. The parameter monitored by the bar graph is selected via P207, as indicated in Figure 5.1 on page 5-1.

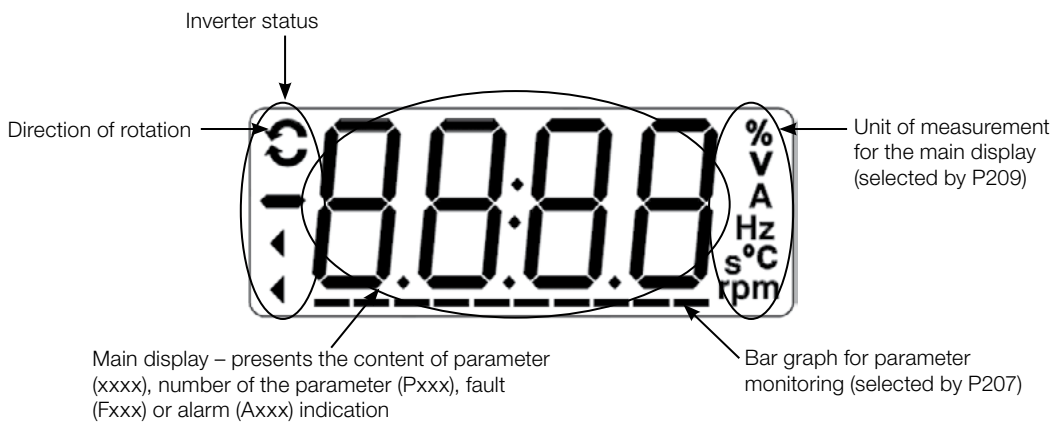

Figure 5.1: *Screen on initialization and display fields*

P207 – Bar Graph Parameter Selection

Adjustable Range:	0 to 999	**Factory Setting:**	P207 = 3

Description:

This parameter defines which parameter will be shown on the HMI Bar Graph.

P208 – Reference Scale Factor

Adjustable Range:	1 to 9999	**Factory Setting:**	P208 = 600 (500)

Description:

This parameter allows adjusting the scale of the parameter speed reference P001 and output (motor) speed P002 so as to convert the indication of frequency values applied to the motor (Hz) into angular speed in "rpm" or a proportional value in "%", for instance.

Together with the unit in P209 and the decimal places in P210, the rated reference (P208) defines the speed indication on the inverter HMI. According to the factory default of those parameters, the preset scale on the inverter is in "Hz" and with a decimal place (60.0 Hz or 50.0 Hz). On the other hand, by setting P208 = 1800 or 1500, P209 = 3 and P210 = 0, a scale in "rpm" with no decimal places is defined (1800 rpm or 1500 rpm).

P209 – Reference Engineering Unit

Adjustable Range:	0 = Without Unit 1 = Without Unit 2 = V 3 = Hz 4 = Without Unit 5 = % 6 = Without Unit 7 = rpm	**Factory Setting:**	3

Description:

This parameter selects the engineering unit that will be presented on parameters P001 and P002.

P210 – Reference Indication Form

Adjustable Range:	0 = wxyz 1 = wxy.z 2 = wx.yz 3 = w.xyz	**Factory Setting:**	1

Description:

This parameter allows setting the form of indication of parameters P001 and P002.

P213 – Bar Graph Scale Factor

Adjustable Range:	1 to 9999	**Factory Setting:**	52

Description:

This parameter configures the full scale (100 %) of the bar graph to indicate the parameter selected by P207.

P200 – Password

Adjustable Range:	0 = Inactive 1 = Active 2 to 9999 = New Password	**Factory Setting:**	0
Properties:	cfg		

Description:

It allows activating the password (by inserting a new value) or disabling it. For further details regarding the use of this parameter, refer to Table 5.1 on page 5-3.

Table 5.1: Required procedure for each kind of action

Action	Procedure
Activate password	1. Set P200 with the desired value for the password (P200 = password). 2. The setting is completed, the new password is active and P200 is automatically adjusted for 1 (password active) (1).
Change password	1. Set the current value of the password (P000 = password). 2. Set the desired value for the new password in P200 (P200 = new password). 3. The setting is completed, the new password is active and P200 is automatically adjusted for 1 (password active) (1).
Disable password	1. Set the current value of the password (P000 = password). 2. Set inactive password (P200 = 0). 3. The setting is completed, the password is disabled (2).
Disable password	1. Activate a factory default by means of P204. 2. The setting is completed, the password is disabled (2).

Notes:
(1) It only allows changing the content of the parameters when P000 is equal to the value of the password.
(2) It is allowed to change the content of the parameters and P000 is inaccessible.

P000 – Access to the Parameters

Adjustable Range:	0 to 9999	**Factory Setting:**	1

Description:

Password input to release the access to the parameters. Once a password is saved in P200, the access to the parameters is only allowed if this password is set in P000. After setting P000 with a password value, P000 will show “1” or “0”, keeping the set password value hidden. Where “1” releases the access to parameters and “0” locks the access to the parameters.

NOTE!
The view of parameter P000 on the HMI will only be available when the password is active (P200 = 1). The access to the parameters and P000 is cleared together with the powering down of the inverter.

5.2 BACKUP PARAMETERS

The CFW100 BACKUP functions allow saving the inverter current parameter contents in a specific memory (virtual EEPROM – flash memory area of the microprocessor), or overwrite the current parameters with the content of the specified memory.

P204 – Load / Save Parameters

Adjustable Range:	0 to 4 = Not Used 5 = Load WEG 60 Hz 6 = Load WEG 50 Hz 7 = Load User 8 = Not Used 9 = Save User 10 = Not Used	**Factory Setting:**	0
Properties:	cfg		

Description:

Table 5.2 on page 5-4 describes the actions performed by each option.

Table 5.2: Option of parameter P204

P204	Action
0 to 4	**Not Used:** no action.
5	**Load WEG 60 Hz:** it loads the default parameters on the inverter with the factory default for 60 Hz.
6	**Load WEG 50 Hz:** it loads the default parameters on the inverter with the factory default for 50 Hz.
7	**Load User:** it transfers the content of the memory from user parameter to the inverter current parameters.
8	**Not Used:** no action.
9	**Save User:** it transfers the current content of the parameters to the memory of user parameters.
10	**Not Used:** no action.

In order to load the parameters of user to the CFW100 operating area (P204 = 7) it is necessary that this area be previously saved.

The operation of uploading this memory (P204 = 7), can also be done via digital inputs (DIx). For further details referring to this programming, refer to section 12.3 DIGITAL INPUT on page 12-6.

NOTE!
When P204 = 5 or 6, parameters P295 (Inv. Rated Current), P296 (Line Rated Voltage) and P308 (Serial Address) are not changed.

NOTE!
In order to upload the user parameters (P204 = 7), the factory default must be uploaded first (P204 = 5 or 6).

5.3 SITUATIONS FOR CONFIG STATUS

The CONFIG status is indicated by the HMI “ConF” status, as well as in parameters P006 and P680. Such status indicates that the CFW100 cannot enable the output PWM pulses because the inverter configuration is incorrect or incomplete. For further details about indications of CONFIG state on the HMI, refer to chapter 14 READING PARAMETERS on page 14-1.

The table below shows the situations of CONFIG status, where the user can identify the origin condition through parameter P047.

Table 5.3: Situations for CONFIG status

P047	Condition
0	Out of CONFIG status. The HMI and parameters P006 and P680 must not indicate ConF.
1	Two or more DIx (P263...P266) programmed for (4 = Forward Run).
2	Two or more DIx (P263...P266) programmed for (5 = Reverse Run).
3	Two or more DIx (P263...P266) programmed for (6 = Start).
4	Two or more DIx (P263...P266) programmed for (7 = Stop).
5	Two or more DIx (P263...P266) programmed for (8 = Direction of Rotation).
6	Two or more DIx (P263...P266) programmed for (9 = LOC/REM).
7	Two or more DIx (P263...P266) programmed for (11 = Accelerate E.P.)
8	Two or more DIx (P263...P266) programmed for (12 = Decelerate E.P.)
9	Two or more DIx (P263...P266) programmed for (14 = 2nd Ramp).
10	Reserved.
11	Two or more DIx (P263...P266) programmed for (24 = Disable Flying Start).
12	Two or more DIx (P263...P266) programmed for (26 = Programming Off).
13	Reserved.
14	Reserved.
15	DIx (P263...P266) programmed for (4 = Forward Run) without DIx (P263...P266) programmed for (5 = Reverse Run) or the opposite.
16	DIx (P263...P266) programmed for (6 = Start) without DIx (P263...P266) programmed for (7 = Stop) or the opposite.
17	P221 or P222 programmed for (8 = Multispeed) without DIx (P263...P266) programmed for (13 = Multispeed) or the opposite.
18	P221 or P222 programmed for (7 = E.P.) without DIx (P263...P266) programmed for (11 = Accelerate E.P) or the opposite.
19	P224 programmed for (1 = DIx) **OR** P227 programmed for (1 = DIx) without DIx (P263...P266) programmed for (1 = Run/Stop) **AND** without DIx (P263...P266) programmed for (2 = General Enable) **AND** without DIx (P263...P266) programmed for (3 = Quick Stop) **AND** without DIx (P263...P266) programmed for (4 = Forward Run) **AND** without DIx (P263...P266) programmed for (6 = Start).
20	Serial baud rate configured for 38400 bps (P310 = 2) and use of the control mode VVW (P202 = 5).
21	P221 or P222 programmed for (8 = Multispeed) with DI1 (P263) and DI2 (P264) programmed for (13 = Multispeed).
22	Minimum Frequency Reference (P133) greater than Maximum Frequency Reference (P134).

6 IDENTIFICATION OF THE INVERTER MODEL AND ACCESSORIES

In order to check the inverter model, see the code on the product nameplate on the side of the inverter.

Once the inverter model identification code is checked, it is necessary to interpret it in order to understand its meaning. Refer to chapter 2 General Information of the CFW100 user's manual.

Below are the parameters related to the inverter model which change according to the inverter model and version. Those parameters must comply with the data read on the product identification label.

6.1 INVERTER DATA

P023 – Main Software Version

P024 – Accessory Software Version

Adjustable Range:	0.00 to 99.99	**Factory Setting:**	
Properties:	ro		

Description:

They indicate the software versions of the microprocessors: Main, on the control card C100A-20 and Accessory, on the accessory connected according to parameter P027.

P027 – Plug-in Module Configuration

Adjustable Range:	0 to 4	**Factory Setting:**	
Properties:	ro		

Description:

This parameter identifies the plug-in which is connected to the control module. The table below presents the accessories which depend on parameter P027.

Table 6.1: *Identification of the plug-in modules of the CFW100*

Name	Description	P027
-	No plug-in module connected.	0
-	Reserved.	1
CFW100-IOAR	Accessory for expansion of IOs: 1 relay output + 1 analog input.	2
CFW100-CCAN	Accessory with communication CANopen and DeviceNet.	3
CFW100-CBLT	Bluetooth communication accessory.	4

P029 – Power Hardware Configuration

Adjustable Range:	Dig. 1 = Rated Voltage Dig. 2 = Rated Current Dig. 3 = Gate Driver	**Factory Setting:**	According to inverter model
Properties:	ro		

Description:

This parameter identifies the inverter model, distinguishing frame, supply voltage and rated current as per Table 6.2 on page 6-2.

Table 6.2: Identification of the CFW100 models

Frame Size	Voltage (V) (P296)	Power Supply	Current (A) (P295)	P029
A	200 / 240	Single-Phase	1.6	312
B	200 / 240	Single-Phase	2.6	322
C	200 / 240	Single-Phase	4.2	332

P295 – Inverter Rated Current

Adjustable Range:	1.6 to 15.2 A	**Factory Setting:**	According to inverter model
Properties:	ro		

Description:

This parameter presents the inverter rated current as per Table 6.2 on page 6-2.

P296 – Line Rated Voltage

Adjustable Range:	0 = Reserved 1 = 100 / 120 V 2 = 200 / 240 V	**Factory Setting:**	2
Properties:	ro, cfg		

Description:

This parameter presents the inverter power supply according to identification performed after power-up.

P297 – Switching Frequency

Adjustable Range:	2.5 to 15.0 kHz	**Factory Setting:**	5.0 kHz

Description:

You can use this parameter to define the inverter IGBT switching frequency.

The inverter switching frequency may be adjusted according to the application needs. Higher switching frequencies imply less acoustic noise in the motor. However, the switching frequency choice results in a compromise among the acoustic noise in the motor, the inverter IGBT losses and the maximum permitted currents.

The reduction of the switching frequency reduces the effects related to the motor instability, which occurs in certain application conditions. Besides, it reduces the earth leakage current, preventing the actuation of the faults F070 (output overcurrent or short-circuit).

P219 – Start Point of the Switching Frequency Reduction

Adjustable Range:	0.0 to 15.0 Hz	**Factory Setting:**	5.0 Hz
Properties:	ro		

Description:

It defines the point at which automatic gradual reduction of the switching frequency occurs. That significantly improves the measurement of the output current at low frequencies and consequently the performance of the inverter.

7 LOGICAL COMMAND AND FREQUENCY REFERENCE

The drive of the electric motor connected to the inverter depends on the logical command and on the reference defined by one of the several possible sources, such as: HMI keys, digital inputs (DIx), analog inputs (AIx), serial/USB interface, CANopen interface, DeviceNet interface, SoftPLC, etc.

The command via HMI is limited to a set of functions pre-defined for the keys according to chapter 4 HMI AND BASIC PROGRAMMING on page 4-1, similarly to the digital inputs (DIx), with the functions implemented in parameter P263 to P270. On the other hand, the command via digital interfaces, such as communication network and SoftPLC, act directly on the inverter control word by means of control parameters and system markers of the SoftPLC, respectively.

The frequency reference in turn is a numeric value in 16 bits with signal with scale in Hertz (Hz), a resolution of 0.1 Hz and full scale at 300.0 Hz.

7.1 SELECTION FOR LOGICAL COMMAND AND FREQUENCY REFERENCE

The inverter command and reference source is defined by the inverter parameters for two different situations: Local and Remote, which can be switched dynamically during the inverter operation. Thus, for a certain parameterization, the inverter has two sets for command and reference, according to block diagram of Figure 7.1 on page 7-2.

Parameter P220 determines the source of commands for Local and Remote situations.

Parameters P223, P224 and P225 define the commands in the Local situation; parameters P226, P227 and P228 define the commands in the Remote situation, and parameter P105 determines the source for selection between 1st and 2nd Ramp. This structure for the selection of the command source is shown in Figure 7.1 on page 7-2.

Parameters P221 and P222 define the frequency reference in the Local and Remote situations.

This structure for the selection of the reference source is shown in Figure 7.2 on page 7-3.

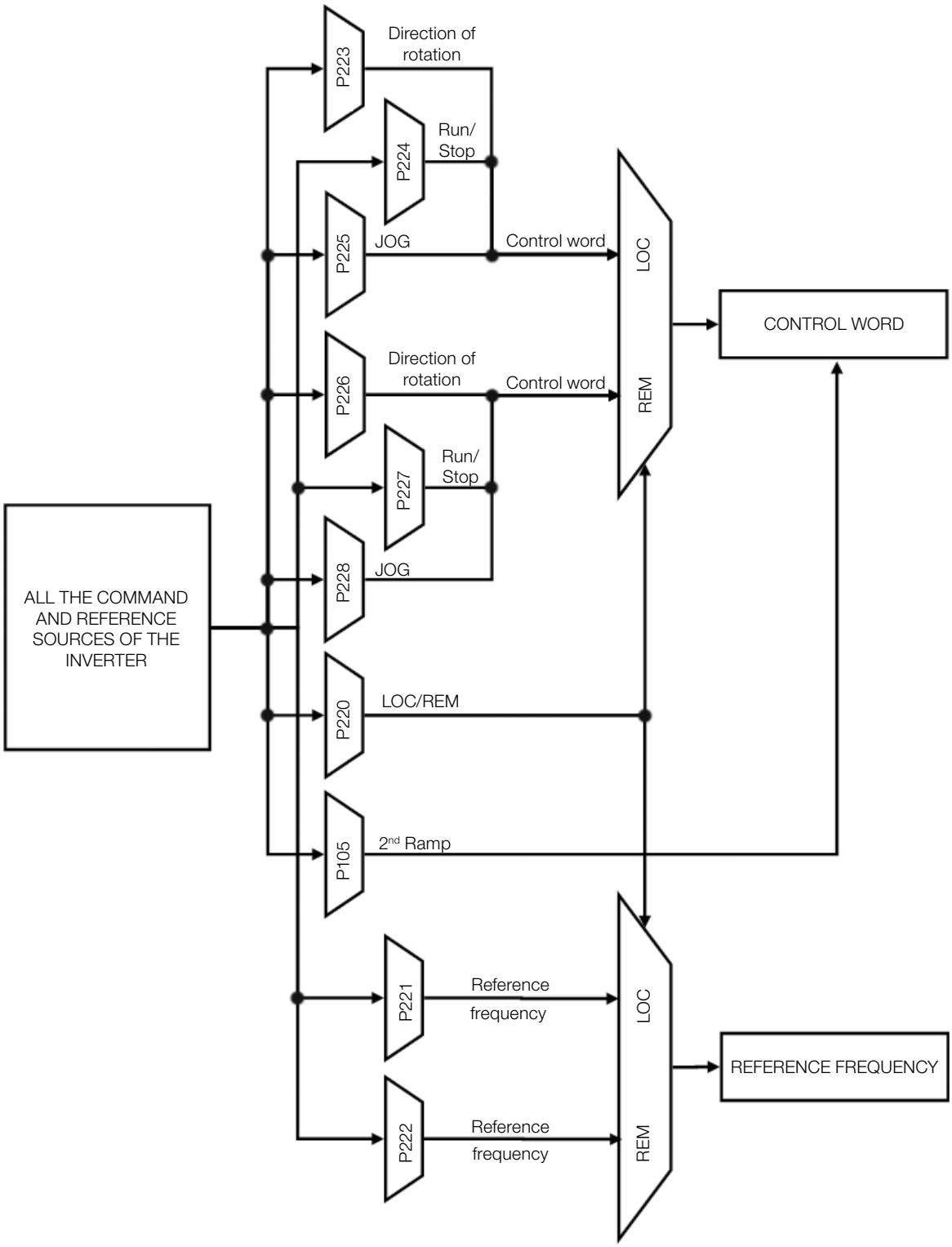

Figure 7.1: *Block diagram for commands and references*

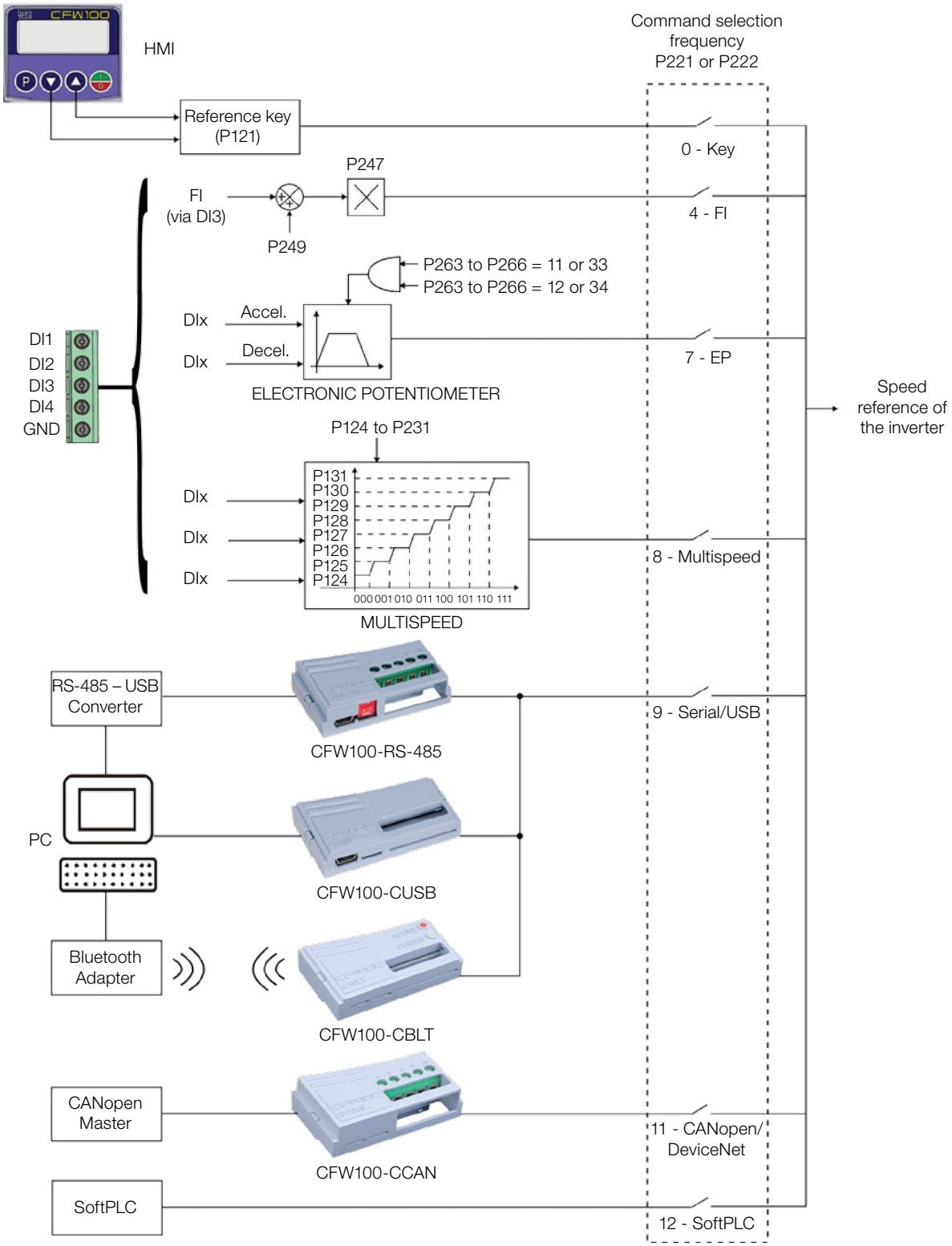

Figure 7.2: *Command selection structure*

P220 – Local/Remote Selection

Adjustable Range:	0 = Always Local 1 = Always Remote 2 = Not Used 3 = Not Used 4 = Digital Input (DIx) 5 = Serial/USB (LOC) 6 = Serial/USB (REM) 7...8 = Not Used 9 = CO/DN (LOC) 10 = CO/DN (REM) 11 = SoftPLC	**Factory Setting:**	0
Properties:	cfg		

Description:

It defines the command origin source which will select between Local situation and Remote situation, where:

- LOC: means Local situation default.
- REM: means Remote situation default.
- DIx: according to function programmed for digital input in P263 to P266.
- CO / DN: CANopen or DeviceNet or Profibus DP Interface.

P221 – Frequency Reference Selection – LOCAL Situation

P222 – Frequency Reference Selection – REMOTE Situation

Adjustable Range:	0 = HMI 1 = AI1 2 to 3 = Not Used 4 = Frequency input (FI) 5 to 6 = Not Used 7 = E.P. 8 = Multispeed 9 = Serial/USB 10 = Not Used 11 = CO/DN 12 = SoftPLC 13 = Not Used 14 = AI1 > 0 15 to 16 = Not Used 17 = FI > 0	**Factory Setting:**	P221 = 0 P222 = 2
Properties:	cfg		

Description:

These parameters define the origin source for the frequency reference in the Local situation and Remote situation. Some comments on the options of this parameter:

- **AI1:** it refers to the analog input signal according to section 12.1 ANALOG INPUTS on page 12-1.
- **HMI:** the reference value set by the keys and are contained in parametere P121.
- **E.P.:** electronic potentiometer; refer to section 12.3 DIGITAL INPUT on page 12-6.

- **Multispeed:** refer to section 12.3 DIGITAL INPUT on page 12-6.
- **AI1 > 0:** the negative values of the AI1 reference are zeroed.
- **CO / DN:** interface CANopen or DeviceNet.

P223 – FORWARD/REVERSE Selection - LOCAL Situation

P226 – FORWARD/REVERSE Selection – REMOTE Situation

Adjustable Range:	0 = Always FORWARD 1 = Always REVERSE 2 = Not Used 3 = Not Used 4 = DIx 5 = Serial/USB (FWD) 6 = Serial/USB (REV) 7 to 8 = Not Used 9 = CO/DN (FWD) 10 = CO/DN (REV) 11 = Not Used 12 = SoftPLC	**Factory Setting:**	P223 = 0 P226 = 2
Properties:	cfg		

Description:

They define the origin source for the “Direction of Rotation" command in the Local and Remote situation, where:

- **H:** Means Forward.
- **AH:** Means Reverse.
- **DIx:** refer to section 12.3 DIGITAL INPUT on page 12-6.
- **CO / DN:** interface CANopen or DeviceNet.

P224 – Run / Stop Selection – LOCAL Situation

P227 – Run / Stop Selection – REMOTE Situation

Adjustable Range:	0 = HMI Keys 1 = DIx 2 = Serial/USB 3 = Not Used 4 = CO/DN 5 = SoftPLC	**Factory Setting:**	P224 = 0 P227 = 3
Properties:	cfg		

Description:

These parameters define the origin source for the “Run/Stop" command in the Local and Remote situation. This command corresponds to the functions implemented in any of the command sources able to enable the motor movement, that is, genera enable, ramp enable, forward run, reverse run, start, etc.

P225 – JOG Selection – LOCAL Situation

P228 – JOG Selection – REMOTE Situation

Adjustable Range:	0 = Disabled 1 = Not Used 2 = DIx 3 = Serial/USB 4 = Not Used 5 = CO/DN 6 = SoftPLC	**Factory Setting:**	P225 = 1 P228 = 1
Properties:	cfg		

Description:

These parameters define the origin source for the JOG function in the Local and Remote situation. The JOG function means a Run/Stop command added to the reference defined by P122; see item 7.2.3 Parameters for Reference Frequency on page 7-7.

7.2 REFERENCE FREQUENCY

The frequency reference is the value applied to the input of the acceleration ramp module (P001) to control the frequency applied to the inverter output (P002) and consequently the motor shaft speed.

Inside the CPU, the inverter uses signed 16 bit variables to treat the frequency references. Besides, the full scale of the reference, output frequency and related variables are defined in 500.0 Hz. On the other hand, depending on the source, this scale is conveniently modified considering the interface with the user by standardization or application requirements.

In general, the digital references defined by parameters such as: HMI keys (P121), Multispeed (P124 to P131) and E.P. have a scale from 0.0 to 300.0 Hz with resolution of 0.1 Hz.

In digital inputs (DIx), on the other hand, the reference is defined according to the function predefined for P263 to P266.

The frequency reference via analog inputs and frequency input is according to the signal, gain and offset parameters P230 to P250. The full scale of the reference is always by P134, that is, maximum value in AIx is equivalent to the frequency reference equal to P134.

The digital references Serial/USB, CANopen, DeviceNet and SoftPLC act on a standardized scale called “13-bit speed”, where the value 8192 (213)) is equivalent to the motor rated frequency (P403). Those references are accessed by parameters P683 and P685.

The digital references, though, have a different scale and the frequency reference parameters with their range from 0.0 to 300.0 Hz, according to previous descriptions. The frequency value on the ramp input (P001) is always limited by P133 and P134. For example, the JOG reference is given by P122, this parameter may be set in up to 300.0 Hz, but the value applied to the ramp input as reference will be limited by P134 when the function is executed.

Table 7.1: *Summary of the scales and resolutions of the frequency references*

Reference	Full Scale	Resolution
Analog inputs (AIx)	-P134 to P134	10 bits or (P134/1024)
Communication networks and SoftPLC	-300.0 Hz to 300.0 Hz	Speed 13 Bits (P403/8192)
HMI parameter	-300.0 Hz to 300.0 Hz	0.1 Hz

7.2.1 Limits for Frequency Reference

Although the parameters to adjust the reference have a wide range of values (0 to 300.0 Hz), the value applied to the ramp is limited by P133 and P134. Therefore, the values in module out of this range will have no effect on the reference.

P133 – Minimum Frequency Reference

Adjustable Range:	0.0 to 300.0 Hz	**Factory Setting:**	3.0 Hz

P134 – Maximum Frequency Reference

Adjustable Range:	0.0 to 300.0 Hz	**Factory Setting:**	66.0 (55.0) Hz

Description:

Limits for frequency reference of the inverter. Those limits are applied to any reference source, even in case of "13-bit speed".

7.2.2 Backup of the Speed Reference

P120 – Backup of the Speed Reference

Adjustable Range:	0 = Inactive 1 = Active 2 = Backup by P121	**Factory Setting:**	1

Description:

This parameter defines the operation of the Backup function of the Speed Reference from one of the options active (P120 = 1), inactive (P120 = 0) and by P121 (P120 = 2). This function, in turn, determines the form of backup of the digital references of the sources: HMI (P121), E.P., Serial/USB (P683), according to Table 7.2 on page 7-7.

Table 7.2: *Options of parameter P120*

P120	Reference Initial Values at the Enabling or Power-Up
0	Value of P133
1	Last adjusted value
2	Value of P121

If P120 = Inactive, the inverter will not save the speed reference value when it is disabled. Thus, when the inverter is enabled again, the speed reference value will become the frequency minimum limit value (P133).

If P120 = Active, the value set in the reference is not lost when the inverter is disabled or powered down.

If P120 = Backup by P121, the reference initial value is fixed by P121 at the enabling or power-up of the inverter.

7.2.3 Parameters for Reference Frequency

P121 – Frequency Reference via HMI

Adjustable Range:	0.0 to 300.0 Hz	**Factory Setting:**	3.0 Hz

Description:

Parameter P121 stores the frequency reference via HMI (P221 = 0 or P222 = 0). When the keys ▲ and ▼ are active and the HMI in the monitoring mode, the value of P121 is increased and shown on the HMI main display. Besides, the P121 is used as input for the reference backup function.

> **NOTE!**
> The maximum setting value of parameter P121 via HMI is limited by P134.

P122 – Frequency Reference for JOG

Adjustable Range:	-300.0 to 300.0 Hz	**Factory Setting:**	5.0 Hz

Description:

During the JOG command, the motor accelerates up to the value defined in P122, following the acceleration ramp set according to P105. This command may be activated by any of the sources, as per section 7.1 SELECTION FOR LOGICAL COMMAND AND FREQUENCY REFERENCE on page 7-1. The negative values determine a direction of rotation opposite to that defined by the inverter command word.

P124 – Multispeed Reference 1

Adjustable Range:	-300.0 to 300.0 Hz	**Factory Setting:**	3.0 Hz

P125 – Multispeed Reference 2

Adjustable Range:	-300.0 to 300.0 Hz	**Factory Setting:**	10.0 (5.0) Hz

P126 – Multispeed Reference 3

Adjustable Range:	-300.0 to 300.0 Hz	**Factory Setting:**	20.0 (10.0) Hz

P127 – Multispeed Reference 4

Adjustable Range:	-300.0 to 300.0 Hz	**Factory Setting:**	30.0 (20.0) Hz

P128 – Multispeed Reference 5

Adjustable Range:	-300.0 to 300.0 Hz	**Factory Setting:**	40.0 (30.0) Hz

P129 – Multispeed Reference 6

Adjustable Range:	-300.0 to 300.0 Hz	**Factory Setting:**	50.0 (40.0) Hz

P130 – Multispeed Reference 7

Adjustable Range:	-300.0 to 300.0 Hz	**Factory Setting:**	60.0 (50.0) Hz

P131 – Multispeed Reference 8

Adjustable Range:	-300.0 to 300.0 Hz	**Factory Setting:**	66.0 (55.0) Hz

Description:

By the combination of up to three digital inputs, one from eight levels that form the multispeed reference is selected. Read the description of the of the digital inputs in section 12.3 DIGITAL INPUT on page 12-6, as well the reference selection in section 7.1 SELECTION FOR LOGICAL COMMAND AND FREQUENCY REFERENCE on page 7-1. The negative values determine a direction of rotation opposite to that defined by the inverter command word (bit 2 of P682).

Figure 7.3 on page 7-9 and Table 7.3 on page 7-9 show the operation of the Multispeed. Although the most significant digital input may be set at DI1 or DI2, only one of those options is allowed; otherwise, the Config state (ConF), according to section 5.3 SITUATIONS FOR CONFIG STATUS on page 5-4, is activated to indicate parameterization incompatibility.

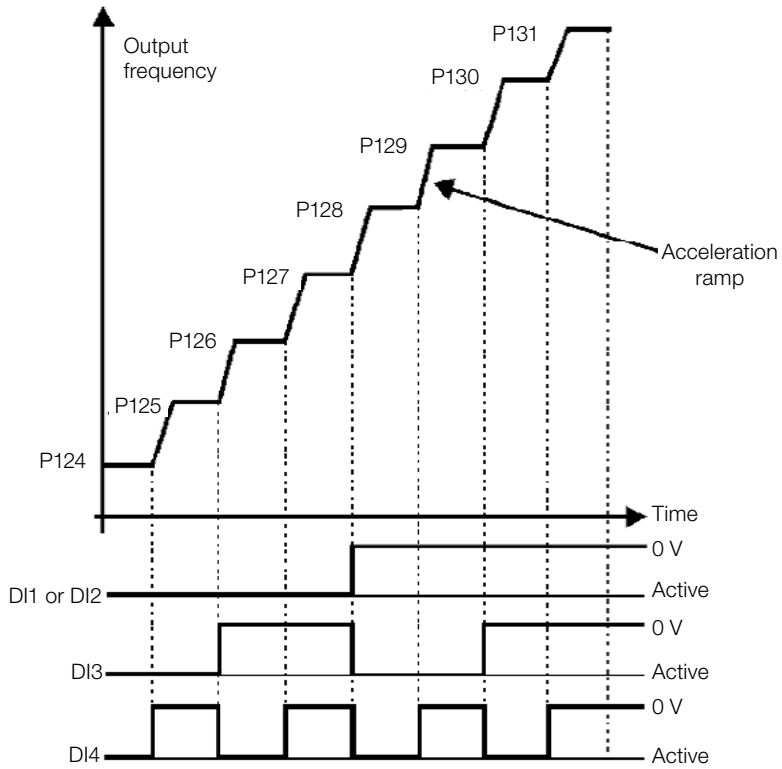

Figure 7.3: *Operating graph of the Multispeed function*

Table 7.3: *Multispeed frequency reference*

8 Referency			
	4 Referency		
		2 Referency	
DI1 or DI2	**DI3**	**DI4**	**Frequency Reference**
Active	Active	Active	P124
Active	Active	0 V	P125
Active	0 V	Active	P126
Active	0 V	0 V	P127
0 V	Active	Active	P128
0 V	Active	0 V	P129
0 V	0 V	Active	P130
0 V	0 V	0 V	P131

7.2.4 Reference via Electronic Potentiometer

The Electronic Potentiometer function (E.P.) allows the frequency reference to be set by means of two digital inputs (one to increment it and another to decrement it).

In order to enable this function, you must first configure the referency reference via E.P., program P221 = 7 and/or

P222 = 7. After enabling this function, just program two digital inputs (P263 to P266) in 11 or 33 (Accelerate E.P.) and 12 or 34 (Decelerate E.P.).

Figure 7.4 on page 7-10 shows the operation of E.P. function of three digital inputs (Accelerate E.P., Decelerate E.P. and Run/Stop). In this example, the reference reset is done with the inverter disabled and activating both Accelerate and Decelerate E.P. inputs. Besides, you can monitor the action of the inputs individually, as well as the action of the reference backup (P120 = 1) when the Run/Stop command is opened and closed again.

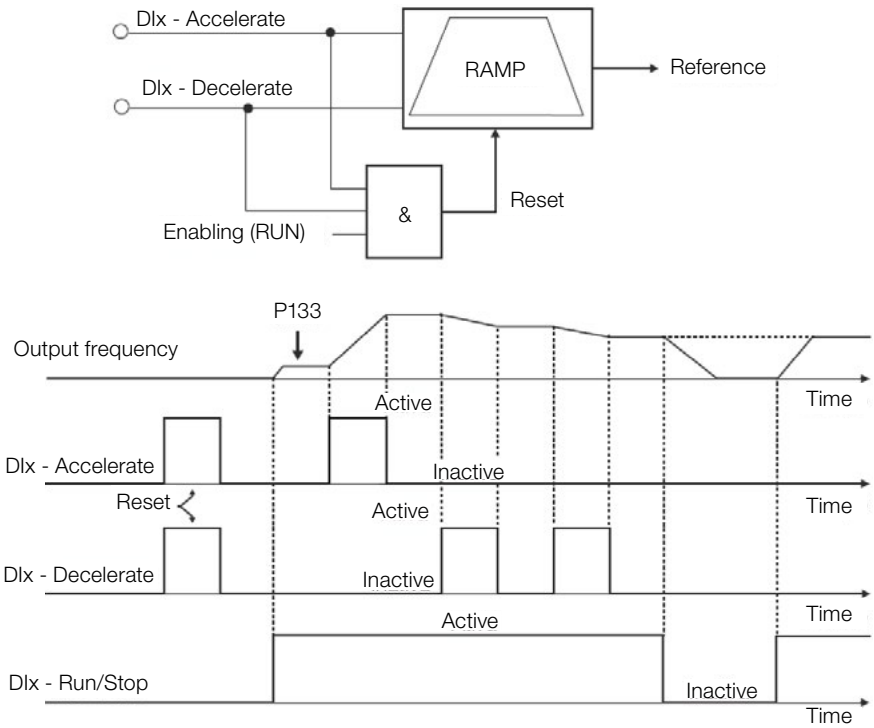

Figure 7.4: *Operating graph of the E.P. function*

7.2.5 Frequency Input FI

The behaviors of the analog input and frequency input are described in details in section 12.2 FREQUENCY INPUT on page 12-4. Thus, after the proper signal treatment, it is applied to the ramp input according to the selection of the reference described in section 7.1 SELECTION FOR LOGICAL COMMAND AND FREQUENCY REFERENCE on page 7-1.

7.2.6 “13-Bit Speed” Reference

The 13-bit Frequency Reference is a scale based on the motor rated frequency (P402) or on the motor rated frequency (P403). In the CFW100, parameter P403 is taken as the base to determine the frequency reference.

Thus, the 13-bit frequency value has a range of 16 bits with signal, that is, -32768 to 32767; however, the rated frequency in P403 is equivalent to the value 8192. Therefore, the maximum value in the range 32767 is equivalent to four times P403.

The 13-bit frequency reference is used in parameters P681 and P683, which are related to the interfaces with communication (Serial/USB) of the product.

7.3 CONTROL WORD AND INVERTER STATUS

The inverter control word is the grouping of a set of bits to determine the commands received by the inverter from an external source. On the other hand, the status word is another set of bits that define the inverter status. This way, the control and status words establish an interface for the exchanging of information between the inverter and an external module, such as a communication network or a controller.

P680 – Logical Status

Adjustable Range:	0000 to FFFF	**Factory Setting:**	-
Properties:	ro		

Description:

The inverter status word is unique for all the sources and can only be accessed for reading. It indicates all the relevant operating status and modes of the inverter. The function of each bit of P680 is described in Table 7.4 on page 7-11.

Table 7.4: *Status word*

BIT	Function	Description
0 to 4	Reserved	-
5	2nd Ramp	**0:** 1st Acceleration and deceleration ramp by P100 and P101. **1:** 2nd Acceleration and deceleration ramp by P102 and P103.
6	Config. Status	**0:** Inverter operating in normal conditions. **1:** Inverter in configuration state. It indicates a special condition in which the inverter cannot be enabled, because it has parameterization incompatibility.
7	Alarm	**0:** Inverter is not in alarm state. **1:** Inverter is in alarm state.
8	Running	**0:** Motor is stopped. **1:** Inverter is running according to reference and command.
9	Enabled	**0:** Inverter is completely disabled. **1:** Inverter is completely enabled and ready to turn the motor.
10	Forward	**0:** Motor spinning reverse. **1:** Motor spinning forward.
11	JOG	**0:** JOG function inactive. **1:** JOG function active.
12	Remote	**0:** Inverter in Local mode. **1:** Inverter in Remote mode.
13	Undervoltage	**0:** No Undervoltage. **1:** With Undervoltage.
14	Reserved	-
15	Fault	**0:** Inverter is not in Fault state. **1:** Some fault registered by the inverter.

P682 – Serial / USB Control

Adjustable Range:	0000h to FFFFh	**Factory Setting:**	-
Properties:	ro		

Description:

The inverter control word for a certain source is accessible for reading and writing, but read only access is permitted for the other sources. The inverter has a common word for interface, which is defined by the function of its bits separately as per Table 7.5 on page 7-12. The value of P682 is indicated in hexadecimal.

Table 7.5: Control word

BIT	Function	Description
0	Ramp Enable	**0:** Stops the motor by deceleration ramp. **1:** Spins the motor according to the acceleration ramp until reaching the speed reference value.
1	General Enable	**0:** Disables the inverter completely, interrupting the power supply to the motor. **1:** Enables the inverter completely, allowing the operation of the motor.
2	Run Forward	**0:** Spins the motor in the opposite direction of the reference signal (reverse). **1:** Spins the motor in the direction of the reference signal (forward).
3	Enable JOG	**0:** Disable JOG function. **1:** Enable JOG function.
4	Remote	**0:** Inverter goes into Local mode. **1:** Inverter goes into Remote mode.
5	2nd Ramp	**0:** Acceleration and deceleration ramp by P100 and P101. **1:** Acceleration and deceleration ramp by P102 and P103.
6	Reserved	-
7	Fault Reset	**0:** No function. **1:** If in fault state, reset the fault.
8 to 15	Reserved	-

P229 – Stop Mode

Adjustable Range:	0 = Ramp to Stop 1 = Coast to Stop	**Factory Setting:**	0
Properties:	cfg		

7

Description:

This parameter defines the motor stop mode when the inverter receives the “Stop” command. Table 7.6 on page 7-12 describes the options of this parameter.

Table 7.6: Selection of stop mode

P229	Description
0	The inverter will apply the stop ramp programmed in P101 or P103.
1	The motor will run free until it stops.

NOTE!
When the Coast Stop mode is programmed and the Flying Start function is disabled, only activate the motor if it is stopped.

NOTE!
This parameter is applied to all the inverter command sources, but it was created aiming at allowing the command via HMI to be able to disable the motor by inertia instead of deceleration ramp. In this way, when P229 = 1, Bit 0 of the control word (Ramp Enable) has a function similar to Bit 1 (General Enable). The same way, the digital input functions such as: Run/Stop, Forward/Reverse Run stop the motor by inertia in this condition of P229.

7.3.1 Control via HMI Inputs

Contrary to the network interfaces and SoftPLC, the HMI commands do not access the inverter control word directly, because of limitations of key functions and HMI behavior. The HMI behavior is described in chapter 4 HMI AND BASIC PROGRAMMING on page 4-1.

7.3.2 Control via Digital Inputs

Contrary to the network interfaces and SoftPLC, the digital inputs do not access the inverter control word directly, because there are several functions for DIx that are defined by the applications. Such digital input functions are detailed in section 12.3 DIGITAL INPUT on page 12-6.

8 AVAILABLE MOTOR CONTROL TYPES

The inverter feeds the motor with variable voltage, current and frequency, providing control of the motor speed. The values applied to the motor follow a control strategy, which depends on the selected type of motor control and on the inverter parameter settings.

The selection of the proper control type for the application depends on the static and dynamic requirements of torque and speed of the driven load, that is, the control type is directly connected to the required performance. Additionally, proper configuration of the selected control mode parameters is essential to reach maximum performance.

The CFW100 is equipped with three control modes for the three-phase induction motor, that is:
- **V/f Scalar Control:** for basic applications without output speed control.
- **Quadratic V/f Scalar Control:** for applications that reduce motor and inverter losses without regulation of the output speed.
- **VVW Sensorless Vector Control:** for applications that need high performance in the control of the output speed.

In chapter 9 V/f SCALAR CONTROL on page 9-1 and chapter 10 VVW VECTOR CONTROL on page 10-1, each of these kinds of control, related parameters and directions regarding the use of each of these modes are described in details.

P202 – Control Type

Adjustable Range:	0 = V/f 1 = Quadratic V/f 2 to 4 = Not used 5 = VVW	**Factory Setting:**	0
Properties:	cfg		

Description:

This parameter selects the kind of three-phase induction motor control used.

P139 – Output Current Filter

Adjustable Range:	0 to 9.999 s	**Factory Setting:**	0.005 s

Description:

Time constant of the filter for the total and active output current. You must consider a filter response time equal to three times the time constant set in P139.

P140 – Slip Compensation Filter

Adjustable Range:	0 to 9.999 s	**Factory Setting:**	0.5 s
Properties:	VVW		

Description:

Time constant of the filter for slip compensation in the output frequency. You must consider a filter response time equal to three times the time constant set in P140.

P397 – Slip Compensation during the Regeneration

Adjustable Range:	0 = Inactive 1 = Active	**Factory Setting:**	1
Properties:	cfg		

Description:

It enables or disables the slip compensation during the regeneration of the VVW control mode.

The regeneration is an operating mode of the inverter which occurs when the power flux goes from the motor to the inverter. Setting P397 = 0 allows the slip compensation to be turned off in this situation. This option is particularly useful when the compensation during the motor deceleration is necessary. Refer to parameter P138 in section 9.1 PARAMETERIZATION OF THE V/f SCALAR CONTROL on page 9-3 for further details on slip compensation.

9 V/f SCALAR CONTROL

This is the classical control method for three-phase induction motors, based on a curve that relates output frequency and voltage. The inverter works as a variable frequency and voltage source, generating a combination of voltage and frequency according to the configured curve. It is possible to adjust this curve for standard 50 Hz, 60 Hz or special motors.

According to the block diagram of Figure 9.1 on page 9-2, the frequency reference f* is limited by P133 and P134 and applied to the input of "V/f CURVE", block, where the output voltage amplitude and frequency imposed to the motor are obtained. For further details on the frequency reference, refer to chapter 7 LOGICAL COMMAND AND FREQUENCY REFERENCE on page 7-1.

By monitoring the total and active output current, and the DC link voltage, compensators and regulators are implanted so as to help in the protection and performance of the V/f control. The operation and parameterization of those blocks are detailed in section 11.2 DC LINK VOLTAGE AND OUTPUT CURRENT LIMITATION on page 11-3.

The advantage of the V/f control is its simplicity and the need of few settings. The start-up is quick and simple and the factory default, in general, requires little or no modification. In cases whose objective is to reduce losses on the motor and inverter, the "Quadratic V/f" may be used, where the flow in the motor air-gap is proportional to the output frequency up to the field weakening point (also defined by P142 and P145). Thus, the result is a torque capacity as a quadratic function of the frequency. The great advantage of such control is the capacity to save energy when driving loads with variable resistant torque, due to the reduction of motor losses (especially losses in the air-gar, magnetic losses).

The V/f or scalar control is recommended for the following cases:

- Drive of several motors with the same inverter (multi-motor drive).
- Energy saving in the drive of loads with quadratic torque/frequency relationship.
- Motor rated current lower than 1/3 of the inverter rated current.
- For test purposes, the inverter is turned on without motor or with a small motor with no load.
- Applications where the load connected to the inverter is not a three-phase induction motor.
- Applications that aim at reducing losses on the motor and inverter (Quadratic V/f).

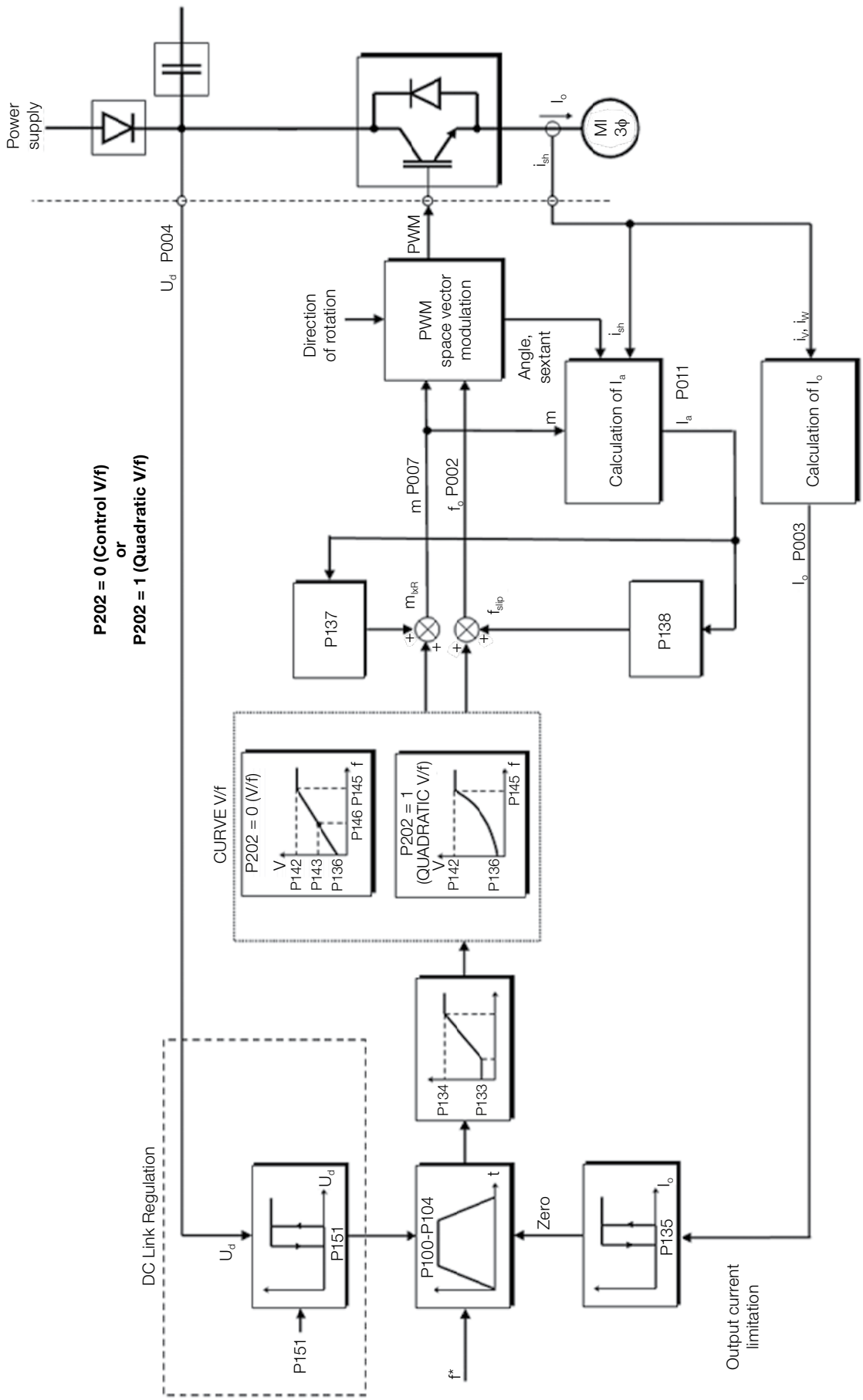

Figure 9.1: *Block diagram of V/f scale control*

9.1 PARAMETERIZATION OF THE V/f SCALAR CONTROL

The scalar control is the inverter factory default control mode for its popularity and because it meets most applications of the market. However, parameter P202 allows the selection of other options for the control mode, as per chapter 8 AVAILABLE MOTOR CONTROL TYPES on page 8-1.

The V/f curve is completely adjustable in four different points as shown in Figure 9.2 on page 9-3,although the factory default set a curve pre-adjusted for motors 50 Hz or 60 Hz, as options for P204. This format, point P0 defines the amplitude applied at 0 Hz, while P2 defines the rated amplitude and frequency and beginning of field weakening. Intermediate points P1 allow the setting of the curve for a non-linear relationship between torque and frequency, for instance, in fans where the load torque is quadratic in relation to the frequency. The field weakening region is determined between P2 and P3, where the amplitude is maintained in 100 %.

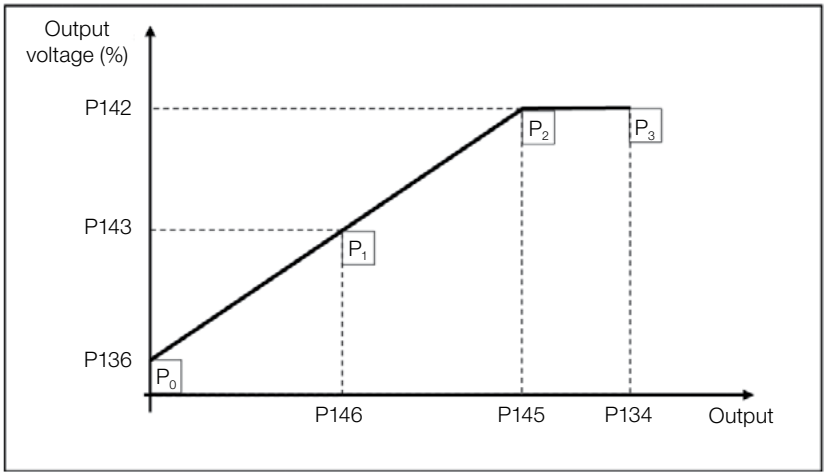

Figure 9.2: *Curva V/f*

The factory default setting of the CFW100 defines a linear relation of the torque with the frequency by means of three points (P_0, P_1 and P_2).

The points $\mathbf{P_0}$[P136, 0 Hz], $\mathbf{P_1}$[P143, P146], $\mathbf{P_2}$[P142, P145] and $\mathbf{P_3}$[100 %, P134] can be set so that the voltage and frequency relation imposed to the output approximates the ideal curve for the load. Therefore, for loads in which the torque behavior is quadratic in relation to the frequency, such as in centrifugal pumps and fans, the points of the curve can be set or the Quadratic V/f control mode can be used so as to save energy. This Quadratic V/f curve is presented in Figure 9.3 on page 9-3.

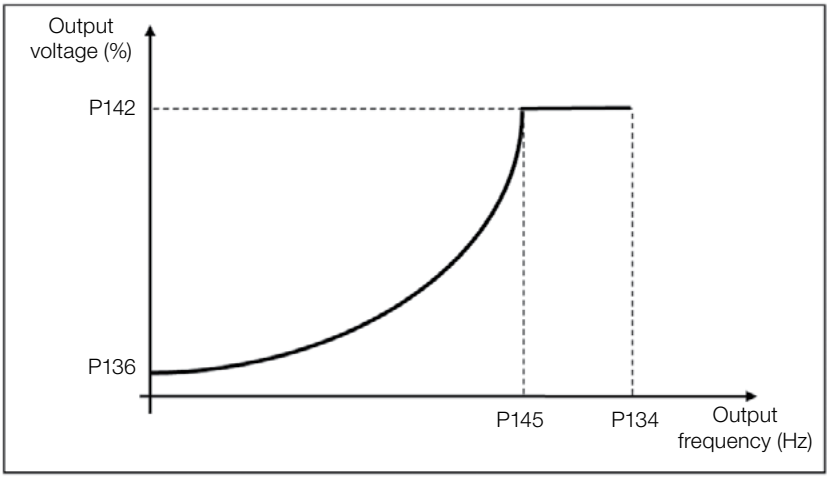

Figure 9.3: *Quadratic V/f Curve*

NOTE!
In frequencies below 0.1 Hz, the output PWM pulses are cut, except when the inverter is in DC Braking mode.

P136 – Manual Torque Boost

Adjustable Range:	0.0 to 30.0 %	**Factory Setting:**	0.0 %
Properties:	V/f		

Description:

It actuates at low speeds, that is, in the range 0 to P146 (V/f) or 0 to P145 (Quadratic V/f), increasing the inverter output voltage so as to compensate the voltage drop in the motor stator resistance in order to keep the torque constant.

The optimum setting is the smallest value of P136 which allows the motor satisfactory start. A value greater than necessary will excessively increase the motor current at low speeds, which may lead the inverter to a fault condition (F051 or F070) or alarm condition (A046 or A050), as well as motor overheating. Figure 9.4 on page 9-4 and Figure 9.5 on page 9-4 show the actuation regions of the Torque Boost for the V/f and Quadratic V/f mode, respectively.

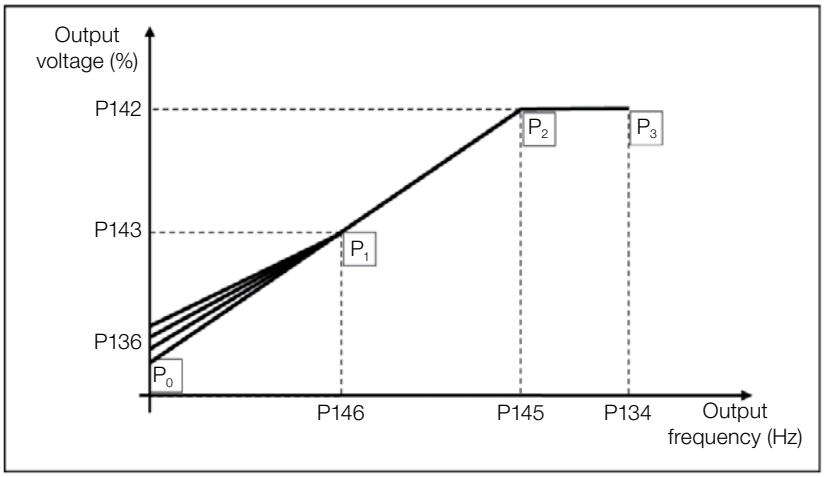

Figure 9.4: *Torque Boost Region for V/f control mode*

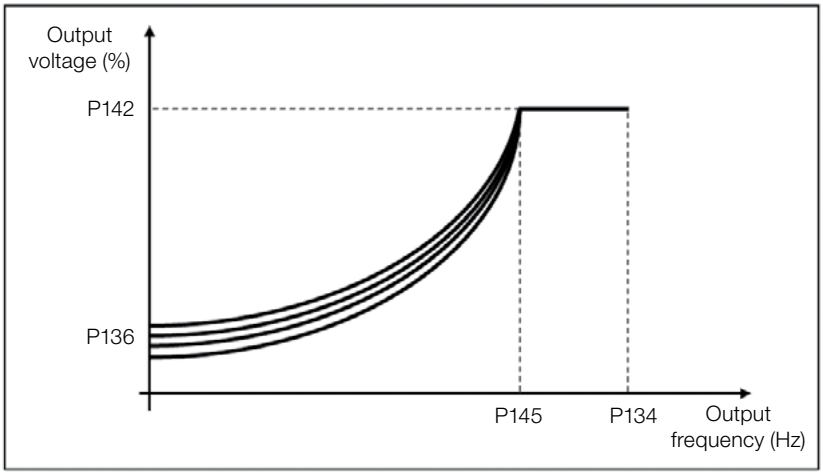

Figure 9.5: *Torque Boost Region for Quadratic V/f control mode*

P142 – Maximum Output Voltage

P143 – Intermediate Output Voltage

Adjustable Range:	0.0 to 100.0 %	**Factory Setting:**	P142 = 100.0 % P143 = 50.0 %
Properties:	cfg, V/f		

Description:

These parameters allow adjusting the inverter V/f curve together with its orderly pairs P145 and P146.

P145 – Field Weakening Start Frequency

P146 – Intermediate Output Frequency

Adjustable Range:	0.0 to 300.0 Hz	**Factory Setting:**	P145 = 60.0 (50.0) Hz P146 = 30.0 (25.0) Hz
Properties:	cfg, V/f		

Description:

These parameters allow adjusting the inverter V/f curve together with its orderly pairs P142 and P143.

The V/f curve can be adjusted in applications where the motor rated voltage is smaller than the power supply voltage, for example, a power supply of 220 V with motor of 200 V.

The adjustment of the V/f curve is necessary when the motor has a frequency different from 50 Hz or 60 Hz, or when a quadratic approximation is desired for energy saving in centrifugal pumps and fans, or in special applications: when a transformer is used between the inverter and the motor or the inverter is used as a power supply.

P137 – Automatic Torque Boost

Adjustable Range:	0.0 to 30.0 %	**Factory Setting:**	0.0 %
Properties:	V/f		

Description:

The automatic torque boost compensates the voltage drop in the stator resistance because of active current. Look at Figure 9.1 on page 9-2, where variable $\mathbf{m_{IxR}}$ corresponds to the automatic torque boost action on the modulation index defined by V/f curve.

P137 actuates similarly to P136, but the value set is applied proportionally to the output active current in relation to the maximum current (2xP295).

The setting criteria of P137 are the same as those of P136, that is, set the value as low as possible for the motor start and operation at low frequencies, because values above those increase the losses, heating and overload of the motor and inverter.

The block diagram of Figure 9.6 on page 9-6 shows the automatic compensation action IxR responsible for the increment of the voltage in the ramp output according to the increase of the active current.

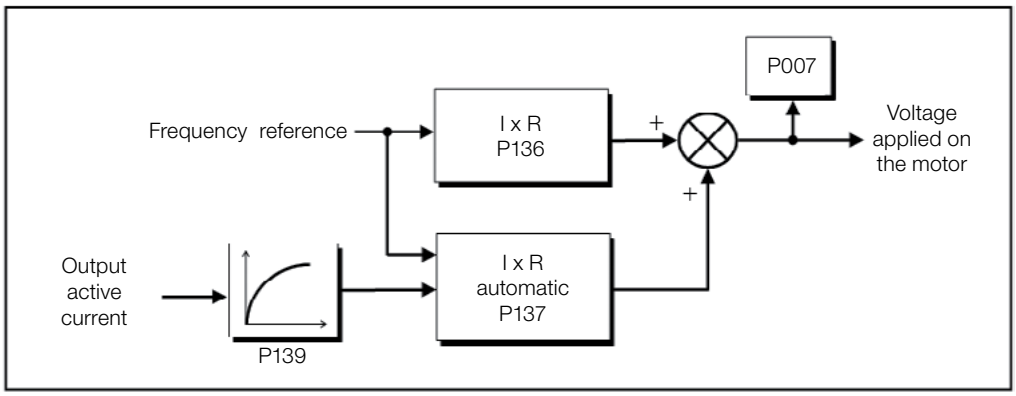

Figure 9.6: *Block diagram of the automatic torque boost*

P138 – Slip Compensation

Adjustable Range:	-10.0 to 10.0 %	**Factory Setting:**	0.0 %
Properties:	V/f		

Description:

Parameter P138 is used in the motor slip compensation function, when set for positive values. In this case, it compensates the speed drop due to the application of load on the shaft and, consequently, the slip. Thus, it increments the output frequency (Δf) considering the increase of the motor active current, as shown in Figure 9.7 on page 9-6. In Figure 9.1 on page 9-2 this compensation is represented in the variable $\mathbf{f_{Slip}}$.

The setting in P138 allows regulating with good accuracy the slip compensation by moving the operation point on the V/f curve, as shown in Figure 9.7 on page 9-6. Once P138 is set, the inverter is able to keep the frequency constant even with load variations.

Negative values are used in special applications where you wish to reduce the output frequency considering the increase of the motor current.

Eg.: load distribution in motors driven in parallel.

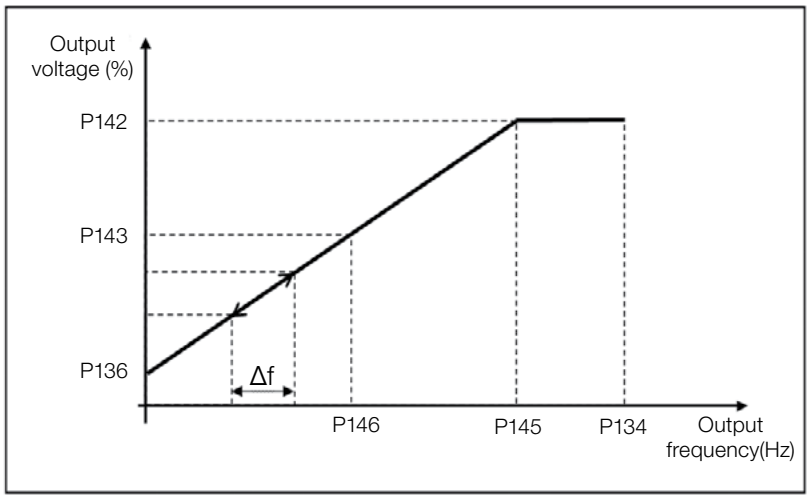

Figure 9.7: *Slip compensation in an operation point of the standar V/f curve*

9.2 START-UP IN V/f MODE

NOTE!
Read chapter 3 Installation and Connection of the CFW100 user manual before installing, energizing or operating the inverter.

Sequence for installation, verification, power up and start-up.

1. Install the inverter: according to chapter 3 Installation and Connection of the user's manual, making all the power and control connections.
2. Prepare and power up the inverter according to section 3.2 Electrical Installation of the user's manual of the CFW100.
3. Load the factory default with P204 = 5 (60 Hz) or P204 = 6 (50 Hz), according to the input rated frequency (power supply) of the inverter used.
4. In order to set a V/f curve different from the default, set the V/f curve using parameters P136 to P146.
5. Setting of specific parameters and functions for the application: program the digital and analog inputs and outputs, HMI keys, etc., according to the application requirements.

For a better view of the start-up in the V/f mode, see Figure 9.8 on page 9-7.

Seq	Indication on the Display/Action	Seq	Indication on the Display/Action
1	rdY ■ Start-up mode. ■ Press this key P to enter the first level of the setting mode.	2	P002 Hz ■ Press the keys ▲ or ▼ until selecting parameter P202.
3	P202 ■ Press the key P if necessary to change the content of "P202 – Control Type" to P202 = 0 (V/f). ■ Press the keys ▲ until selecting parameter P401.	4	P401 A ■ If necessary, change the content of parameter "P401 – Motor Rated Current" according to data on the nameplate. ■ Press the key ▲ for the next parameter.
5	P402 rpm ■ If necessary, change the content of "P402 – Motor Rated Speed". ■ Press the key ▲ for the next parameter.	6	P403 Hz ■ If necessary, change the content of "P403 – Motor Rated Frequency".

Figure 9.8: *Sequence for V/f control*

10 VVW VECTOR CONTROL

The VVW vector control mode (Voltage Vector WEG) uses a control method with a much higher performance than the V/f control because of the load torque estimation and of the control of the magnetic flux in the air gap, as per scheme of Figure 10.1 on page 10-2. In this control strategy, losses, efficiency, rated slip and power factor of the motor are considered in order to improve the control performance.

The main advantage compared to the V/f control is the best frequency regulation with greater torque capacity at low speeds (frequencies below 5 Hz), allowing a relevant improvement in the drive performance in permanent duty. Besides, the VVW control has a quick and simple setting and it is suitable for most medium-performance applications in the control of three-phase induction motor.

By just measuring the output current, the VVW control instantly obtains the motor torque and slip. Thus, the VVW actuates in the output voltage compensation and slip compensation. Therefore, the VVW controller action replaces the classical V/f functions in P137 and P138, but with a calculation model much more sophisticated and accurate, meeting several load conditions or operation points of the application.

In order to achieve a good frequency regulation in permanent duty with a good operation of the VVW control, the parameter setting in the range P399 to P407, and the stator resistance in P409 are essential for the good operation of the VVW control. Those parameters can be easily obtained on the motor nameplate.

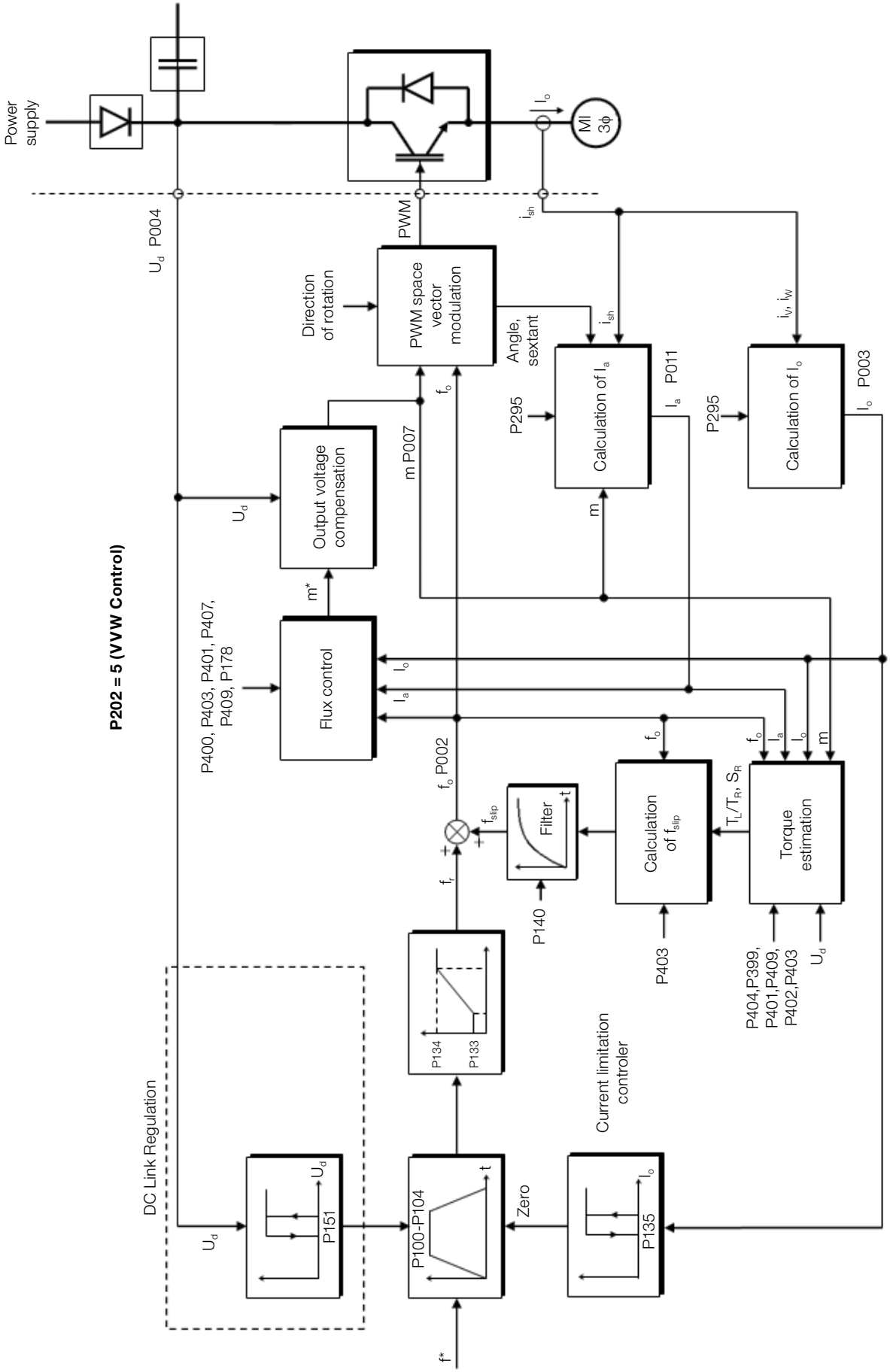

Figure 10.1: VVW control flow

10.1 VVW VECTOR CONTROL PARAMETERIZATION

The VVW control mode is selected by parameter P202, control mode selection, as described in chapter 8 AVAILABLE MOTOR CONTROL TYPES on page 8-1.

Opposite to the V/f scalar control, the VVW control requires a series of data from the motor nameplate and a self-tuning for its proper operation. Besides, it is recommended that the driven motor match the inverter, that is, the motor and inverter power be as close as possible.

Below are described the parameters to configure the VVW vector control setting. This data is easily obtained on WEG standard motor nameplates, however in older motors or motors made by other manufacturers, the data may not be readily available. In those cases, it is recommended first contact the motor manufacturer, measure or calculate the desired parameter. As a last resort, the user always can make a relationship with Table 10.1 on page 10-3 and use the equivalent or approximate WEG standard motor parameter.

NOTE!
The correct setting of the parameters directly contributes to the VVW control performance.

Table 10.1: *Characteristics of IV pole WEG standard motors*

Power [P404]		Frame size	Voltage [P400] (V)	Current [P401] (A)	Frequency [P403] (Hz)	Speed [P402] (rpm)	Efficiency [P399] (%)	Power Factor [P407]	Stator Resistance [P409] (Ω)
(CV)	(kW)								
0.16	0.12	63	220	0.85	60	1720	56	0.66	21.77
0.25	0.18	63		1.12		1720	64	0.66	14.87
0.33	0.25	63		1.42		1720	67	0.69	10.63
0.50	0.37	71		2.07		1720	68	0.69	7.37
0.75	0.55	71		2.90		1720	71	0.70	3.97
1	0.75	80		3.08		1720	78	0.82	4.13
0.16	0.12	63	230	0.73	50	1375	57	0.72	30.62
0.25	0.18	63		1.05		1360	58	0.74	20.31
0.33	0.25	71		1.40		1310	59	0.76	14.32
0.50	0.37	71		1.97		1320	62	0.76	7.27
0.75	0.55	80		2.48		1410	68	0.82	5.78
1	0.75	80		3.23		1395	72	0.81	4.28

10

P178 – Rated Flux

Adjustable Range:	50.0 to 150.0 %	**Factory Setting:**	100.0 %
Properties:	VVW		

Description:

It defines the desired flux in the motor air gap in percentage (%) of the rated flux. In general, it is not necessary to modify the value of P178 of the standard value of 100 %. However, some specific situations may use values slightly above to increase the torque, or below to reduce the energy consumption.

P399 – Motor Rated Efficiency

Adjustable Range:	50.0 to 99.9 %	**Factory Setting:**	67.0 %
Properties:	cfg, VVW		

Description:

This parameter is important for the precise operation of the VVW control. A misconfiguration will cause incorrect calculation of the slip compensation, reducing the performance of the speed control.

P400 – Motor Rated Voltage

Adjustable Range:	0 to 240 V	**Factory Setting:**	220 (230) V
Properties:	cfg, VVW		

Description:

Set according to the data on the motor nameplate and the wire connection on the motor terminal box. This value cannot be above the rated voltage value set in P296 (power supply rated voltage).

Table 10.2: *Default setting of P400 according to the identified inverter model*

P296	P145 (Hz)	P400 (V)
0	Reserved	Reserved
1	50.0	TBD
	60.0	TBD
2	50.0	230
	60.0	220

For further information on model identification, refer to Table 6.2 on page 6-2 of chapter 6 IDENTIFICATION OF THE INVERTER MODEL AND ACCESSORIES on page 6-1.

P401 – Motor Rated Current

Adjustable Range:	0.0 to 10.0 A	**Factory Setting:**	1.4 A
Properties:	cfg		

P402 – Motor Rated Speed

Adjustable Range:	0 to 9999 rpm	**Factory Setting:**	1720 (1310) rpm
Properties:	cfg		

P403 – Motor Rated Frequency

Adjustable Range:	0 to 300 Hz	**Factory Setting:**	60 Hz (50 Hz)
Properties:	cfg		

P404 – Motor Rated Power

Adjustable Range:	0 = 0.16 HP (0.12 kW) 1 = 0.25 HP (0.19 kW) 2 = 0.33 HP (0.25 kW) 3 = 0.50 HP (0.37 kW) 4 = 0.75 HP (0.55 kW) 5 = 1 HP (0.75 kW)	**Factory Setting:**	2
Properties:	cfg, VVW		

P407 – Motor Rated Power Factor

Adjustable Range:	0.50 to 0.99	**Factory Setting:**	0.69
Properties:	cfg, VVW		

Description:

The setting of parameters P401, P402, P403, P404 and P407 must be according to the data on the nameplate of the motor used, taking into account the motor voltage.

P409 – Self-Tuning

Adjustable Range:	0.01 to 99.99 Ω	**Factory Setting:**	10.63
Properties:	cfg, VVW		

Description:

Motor phase stator resistance in ohms (Ω), assuming a star (Y) motor connection.

If the value adjusted in P409 is too high or too low for the inverter used, the inverter indicates fault F033. In order to exit this condition, just perform a reset by using the I/O key. In this case, P409 will be loaded with the factory default value.

10.2 START-UP IN VVW MODE

NOTE!
Read chapter 3 Installation and Connection of the user's manual before installing, powering up or operating the inverter.

Sequence for installation, verification, power up and start-up:

1. **Install the inverter:** according to chapter 3 Installation and Connection of the user's manual, making all the power and control connections.

2. **Prepare and power up the inverter:** according to section 3.2 Electrical Installation of the user's manual.

3. **Load the correct factory default in P204:** based on the motor rated frequency (set P204 = 5 for 60 Hz motors and P204 = 6 for 50 Hz motors).

4. **Adjustment of parameters and specific functions for the application:** program the digital and analog inputs and outputs, HMI keys, etc., according to the application requirements.

5. **Activation of the VVW control:** set P202 = 5 and parameters P399, P400, P401, P402, P403, P404 and P407 according to the motor nameplate. Also set the value of P409. If some of those data are not available, enter the approximate value by calculation or by similarity with WEG standard motor – see Table 10.1 on page 10-3.

For better visualization of the start-up in the VVW mode, check Figure 10.2 on page 10-6, below:

Seq	Action/Indication on the Display	Seq	Action/Indication on the Display
1	rdY ■ Monitoring mode. ■ Press this key P to enter the first level of the setting mode.	2	P002 Hz ■ Press the keys ▲ or ▼ until selecting parameter P202.
3	P202 ■ Press the key P to change the content of "P202 – Control Type" to P202 = 5 (VVW). Use the key ▲.	4	5 ■ Press the key P to save the change of P202. ■ Use the keys ▲ until selecting parameter P399.
5	P399 % ■ If necessary, change the content of "P399 – Motor Rated Efficiency" according to data on the nameplate. ■ Press the key ▲ for the next parameter.	6	P400 V ■ If necessary, change the content of "P400 – Motor Rated Voltage". ■ Press the key ▲ for the next parameter.
8	P401 A ■ If necessary, change the content of "P401 – Motor Rated Current". ■ Press the key ▲ for the next parameter.	9	P402 rpm ■ If necessary, change the content of "P402 – Motor Rated Speed". ■ Press the key ▲ for the next parameter.
10	P403 Hz ■ If necessary, change the content of "P403 – Motor Rated Frequency". ■ Press the key ▲ for the next parameter.	11	P404 ■ If necessary, change the content of "P404 – Motor Rated Output". ■ Press the key ▲ for the next parameter.
12	P407 ■ If necessary, change the content of "P407 – Motor Rated Power Factor". ■ Press the key ▲ for the next parameter.	13	P409 ■ If necessary, change the content of "P409 – Stator Resistance".

Figure 10.2: *Start-up of the VVW mode*

11 FUNCTIONS COMMON TO ALL THE CONTROL MODES

This chapter describes the functions common to the inverter V/f and V VW control modes, but which interferes in the drive performance.

11.1 RAMPS

The inverter ramp functions allow the motor to accelerate or decelerate faster or slower. They are adjusted by parameters that define the linear acceleration time between zero and the maximum frequency (P134) and the time for a linear deceleration from the maximum frequency zero.

In the CFW100, three ramps with different functions were implemented:

- 1st Ramp – standard for most functions.
- 2nd Ramp – it may be activated by the user, according to the drive requirement, by means of the inverter command word or by a digital input.
- Emergency Ramp – it is used for the inverter internal protection functions, such as: current limitation, DC link regulation, etc. The Emergency Ramp has priority over the other ramps.

NOTE!
The setting with too short ramp time may cause overcurrent in the output (F070), undervoltage (F021) or overvoltage (F022) of the DC link.

P100 – Acceleration Time

Adjustable Range:	0.1 to 999.9 s	**Factory Setting:**	5.0 s

Description:
Acceleration time from zero to maximum frequency (P134).

P101 – Deceleration Time

Adjustable Range:	0.1 to 999.9 s	**Factory Setting:**	10.0 s

Description:
Deceleration time from maximum frequency (P134) to zero.

P102 – Acceleration Time 2nd Ramp

Adjustable Range:	0.1 to 999.9 s	**Factory Setting:**	5.0 s

Description:
Acceleration time from zero to maximum frequency (P134) when the 2nd Ramp is active.

P103 – Deceleration Time 2nd Ramp

Adjustable Range:	0.1 to 999.9 s	**Factory Setting:**	10.0 s

Description:

Deceleration time from maximum speed (P134) to zero when the 2nd Ramp is active.

P106 – Emergency Ramp Acceleration Time

Adjustable Range:	0.1 to 999.9 s	**Factory Setting:**	5.0 s

Description:

Acceleration time from zero to maximum frequency (P134) when the Emergency Ramp is active.

P107 – Emergency Ramp Deceleration Time

Adjustable Range:	0.1 to 999.9 s	**Factory Setting:**	5.0 s

Description:

Deceleration time from maximum frequency (P134) to zero when the Emergency Ramp is active.

P104 – S Ramp

Adjustable Range:	0 = Inactive 1 = Active	**Factory Setting:**	0
Properties:	cfg		

Description:

This parameter allows the inverter acceleration and deceleration ramps to have a non-linear profile, similar to an "S", aiming at reducing the mechanical shocks on the load, as shown in Figure 11.1 on page 11-2.

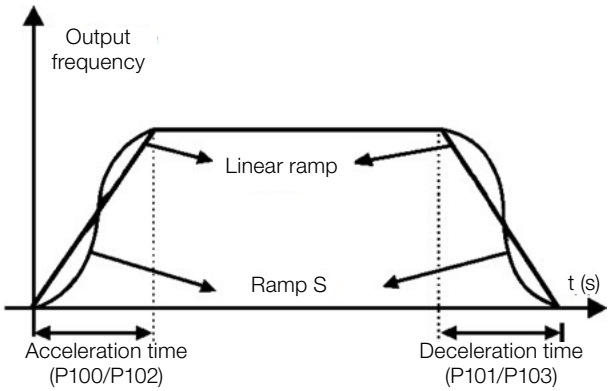

Figure 11.1: *S or Linear ramp*

P105 – 1st / 2nd Ramp Selection

Adjustable Range:	0 = 1st Ramp 1 = 2nd Ramp 2 = DIx 3 = Serial/USB 4 = Reserved 5 = CANopen/DeviceNet 6 = SoftPLC	**Factory Setting:**	0

Description:

It defines the origin source of the command to select between the first and second Ramp.

Note: Parameter P680 (Logical Status) indicates if the 2nd Ramp is active or not. For further information on this parameter, refer to section 7.3 CONTROL WORD AND INVERTER STATUS on page 7-10.

11.2 DC LINK VOLTAGE AND OUTPUT CURRENT LIMITATION

The DC link voltage and output current limitation are protection functions of the inverter which act on the ramp control, aiming at containing the rise of voltage on the DC link and of the output current. In this way, the following of the reference by the ramp is blocked and the output frequency follows the Emergency Ram for a preset safety value.

When the DC link voltage is too high, the inverter may freeze the deceleration ramp. On the other hand, when the output current is too high, the inverter may decelerate or freeze the acceleration ramp in order to reduce this current. Those actions prevent the occurrence of faults F022 and F070, respectively.

Both protections normally occur at different moments of the inverter operation, but in case of occurrence at the same time, by definition, the DC link limitation has higher priority than the output current limitation.

The voltage limitation on the DC link during braking actuates limiting the braking power and torque, so as to prevent the shutting down of the inverter for overvoltage (F022). This situation often occurs when a load with high moment of inertia is decelerated or when short deceleration time is programmed.

11.2.1 DC Link Voltage Limitation by “Ramp Hold” P150 = 0 or 2:

- It has effect during deceleration only.
- Actuation: when the DC link voltage reaches the level set in P151, a command is set to the “ramp” block, which inhibits the motor frequency variation according to Figure 9.1 on page 9-2 and Figure 10.1 on page 10-2.
- Use recommended in the drive of loads with high moment of inertia referred to the motor shaft or loads that require short deceleration ramps.

11.2.2 DC Link Voltage Limitation by “Accelerate Ramp” P150 = 1 or 3:

- It has effect in any situation, regardless the motor frequency condition: accelerating, decelerating or constant frequency.
- Actuation: when the DC link voltage reaches the level set in P151, a command is sent to the “ramp” block to accelerate the motor.
- Use recommended for the drive of loads that require braking torques at constant frequency in the inverter output. For example, the drive of loads with eccentric shaft as in sucker rod pumps; another application is the handling of loads with balance like in the translation in overhead cranes.

P149 – Compensation of the DC Link Voltage

Adjustable Range:	0 = Inactive 1 = Active	**Factory Setting:**	1
Properties:	cfg		

Description:

It enables the use of Compensation of the DC link.

P150 – Type DC V/f Link Regulator

Adjustable Range:	0 = hold_Ud and decel_LC 1 = accel_Ud and decel_LC 2 = hold_Ud and hold_LC 3 = accel_Ud and hold_LC	**Factory Setting:**	0
Properties:	cfg		

Description:

P150 configures the behavior of the ramp for the limitation functions of the DC Link Voltage and Current Limitation. In those cases, the ramp ignores the reference and takes an action of accelerating (accel), decelerating (decel) or freezing (hold) the normal path of the ramp. That occurs because of the limit pre-defined in P151 and P135 for the DC Link (Ud) Limitation and for Current (LC) Limitation, respectively.

In order to disable the DC link limitation (Ud) and/or the current limitation, you must set P151 > 410 V and P135 > 2xInom, respectively.

P151 – DC Link Regulation Level

Adjustable Range:	325 to 460 V	**Factory Setting:**	380 V

Description:

Voltage level to activate the DC link voltage regulation. In order to disable the DC link limitation (Ud), you must set parameter P151 > 410 V.

Figure 11.2 on page 11-4 shows the block diagram of the actuation of the limitation. Figure 11.3 on page 11-5 and Figure 11.4 on page 11-5 show the example chart.

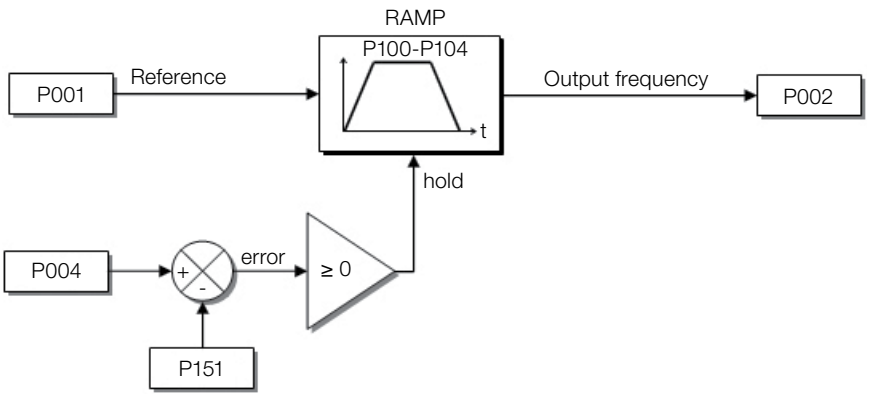

Figure 11.2: *Block diagram DC link voltage limitation*

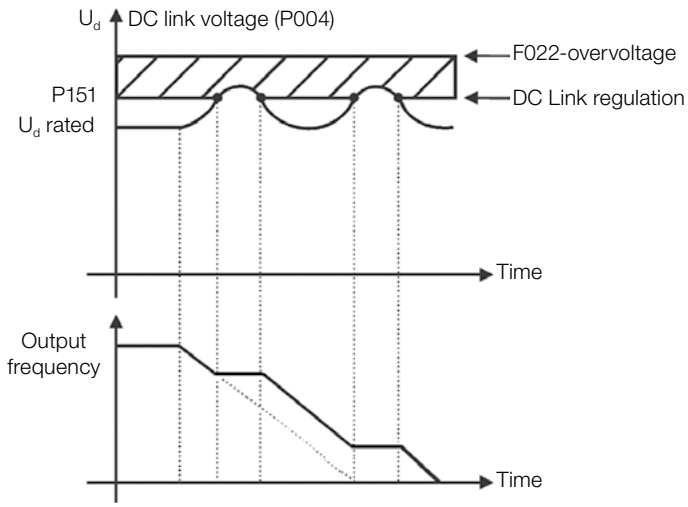

Figure 11.3: *Example graph of DC link voltage limitation – Ramp Hold*

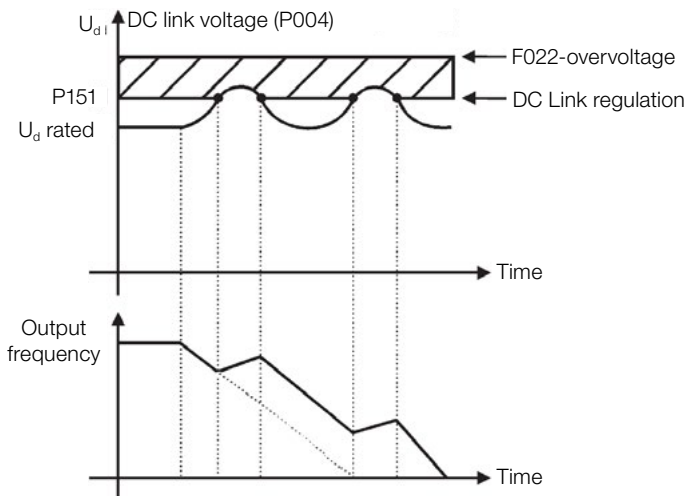

Figure 11.4: *Example graph of the DC link voltage limitation – Accelerate Ramp*

Like in the DC link voltage regulation, the output current regulation also has two operating modes: "Ramp Holding" (P150 = 2 or 3) and "Decelerate Ramp" (P150 = 0 or 1). Both actuate limiting the torque and power delivered to the motor, so as to prevent the shutting down of the inverter by overcurrent (F070). This situation often occurs when a load with high moment of inertia is accelerated or when short acceleration time is programmed.

11.2.3 Output Current Limitation by "Ramp Hold" P150 = 2 or 3:

- It prevents the motor from collapsing during torque overload in the acceleration or deceleration.
- Actuation: if the motor current exceeds the value set in P135 during acceleration or deceleration, the frequency will not be incremented (acceleration) or decremented (deceleration). When the motor current reaches a value below P135 the motor accelerates or decelerates again. Refer to Figure 11.5 on page 11-6;
- It has a faster action than the "Decelerate Ramp" mode.
- It acts in the motorization and regeneration modes.

11.2.4 Current Limitation Type "Decelerate Ramp" P150 = 0 or 1:

- It prevents the motor from collapsing during torque overload in the acceleration or constant frequency.
- Actuation: if the motor current exceeds the value set in P135, a null value is forced for the frequency ramp input forcing the motor deceleration. When the motor current reaches a value below P135 the motor accelerates again. Look at Figure 11.5 on page 11-6.

P135 – Maximum Output Current

Adjustable Range:	0.0 to 10.0 A	**Factory Setting:**	1.5 x I_{nom}

Description:

Current level to activate the current limitation for the Ramp Hold and Decelerate Ramp modes, as per Figure 11.5 on page 11-6 (a) and (b), respectively. In order to disable the current limitation, you must set parameter P135 > 1.9xI_{nom}.

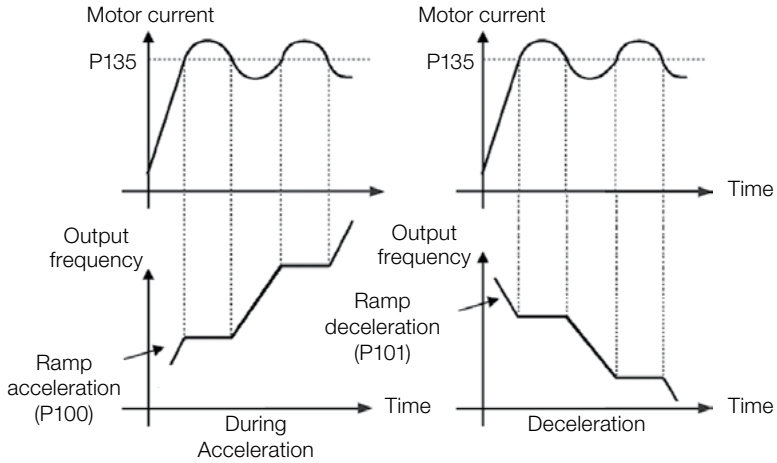

(a) "Ramp Hold"

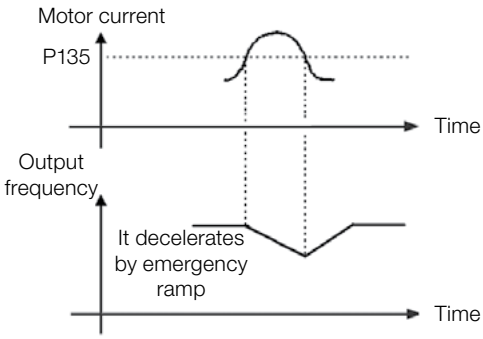

(b) "Ramp Deceleration"

Figure 11.5: *(a) and (b) Actuation modes of Current Limitation via P135*

11

11.3 FLYING START / RIDE-THROUGH

The Flying Start function allows driving a motor that is in free spinning, accelerating it from the rotation in which it is. The Ride-Through function allows recovering the inverter, with no locking by undervoltage, when there is an instant drop in the power supply.

Both functions assume the special case in which the motor is spinning in the same direction and at a frequency close to the frequency reference, thus, by immediately applying the frequency reference to the output and increasing the output voltage in ramp, the slip and the starting torque are minimized.

P320 – Flying Start (FS) / Ride Through (RT)

Adjustable Range:	0 = Inactive 1 = Flying Start 2 = Flying Start / Ride-Through 3 = Ride-Through	**Factory Setting:**	0
Properties:	cfg		

Description:

Parameter P320 selects the use of the Flying Start and Ride-Through functions. More details in the following sections.

P331 – Voltage Ramp for FS and RT

Adjustable Range:	0.2 to 60.0 s	**Factory Setting:**	2.0 s

Description:

This parameter determines the rising time of the output voltage during the execution of the Flying Start and Ride-Through functions.

P332 – Dead Time

Adjustable Range:	0.1 to 10.0 s	**Factory Setting:**	1.0 s

Description:

Parameter P332 sets the minimum time the inverter will wait until driving the motor again, which is necessary for the demagnetization of the motor.

For the Ride-Through function, the time is counted as of the line drop. However, in the actuation of the Flying Start function, the count starts after the application of the “Run/Stop = Run” command.

11.3.1 Flying Start Function

In order to activate this function, just program P320 in 1 or 2; thus the inverter will impose a fixed frequency at the start, defined by the frequency reference, and apply the voltage ramp defined in parameter P331. In this way, the start current is reduced. On the other hand, if the motor is at rest, the frequency reference and the real frequency of the motor are very different or the direction of rotation is inverted; the result in such cases may be worse than the conventional start without Flying Start.

The Flying Start function is applied on loads with high inertia or systems that require start with the motor spinning. Besides, the function may be deactivated dynamically by a digital input P263 to P266 programmed for “24 = Disable Flying Start”. In this way, the user may activate the function in a convenient way according to the application.

11.3.2 Ride-Through Function

The Ride-Through function will disable the inverter output pulses (IGBT) as soon as the supply voltage reaches a value below the undervoltage value. A fault due to undervoltage (F021) does not occur and the DC link voltage will slowly drop until the supply voltage returns. In case it takes the supply voltage too long to return (over 2 seconds), the inverter may indicate F021 (undervoltage on the DC link). If the supply voltage returns before, the inverter will enable the pulses again, imposing the frequency reference instantly (like in the Flying Start function) and making a voltage ramp with time defined by parameter P331. Refer to Figure 11.6 on page 11-8.

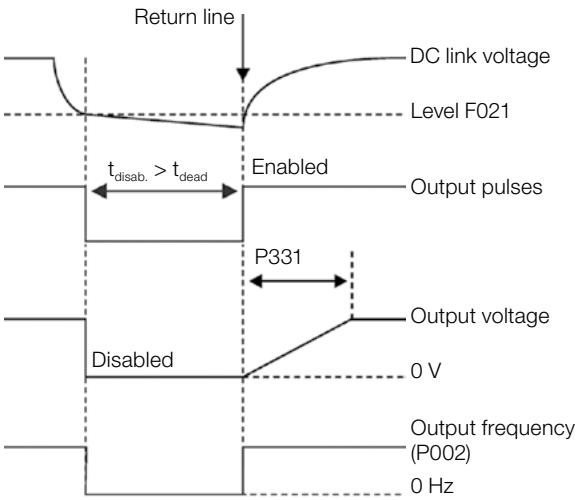

Figure 11.6: *Actuation of the Ride-Through function*

The Ride-Through function allows recovering the inverter without locking by undervoltage F021 for momentary power supply drops. The time interval accepted during a fault is at most two seconds.

11.4 DC BRAKING

The DC Braking allows stopping the motor by applying direct current to it. The current applied at the DC Braking is proportional to the braking torque and may be set in P302. It is set in percentage (%) of the inverter rated current considering the motor of power compatible with the inverter.

P299 – DC Braking Time at Start

Adjustable Range:	0.0 to 15.0 s	**Factory Setting:**	0.0 s

Description:

DC braking duration at the start.

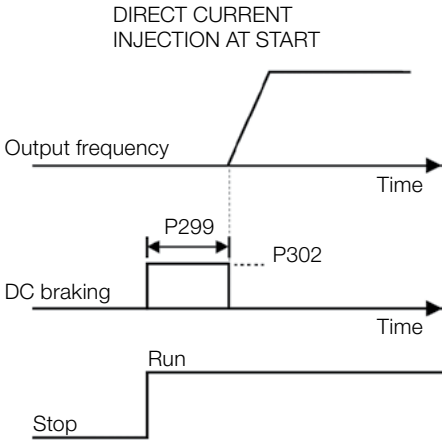

Figure 11.7: *DC Braking actuation at start*

P300 – DC Braking Time at Stop

Adjustable Range:	0.0 to 15.0 s	**Factory Setting:**	0.0 s

Description:

DC Braking duration at the stop. Figure 11.8 on page 11-9 shows the braking behavior at the stop, where the dead time for the de-magnetization of the motor can be observed. This time is proportional to the frequency at the moment of the injection of direct current.

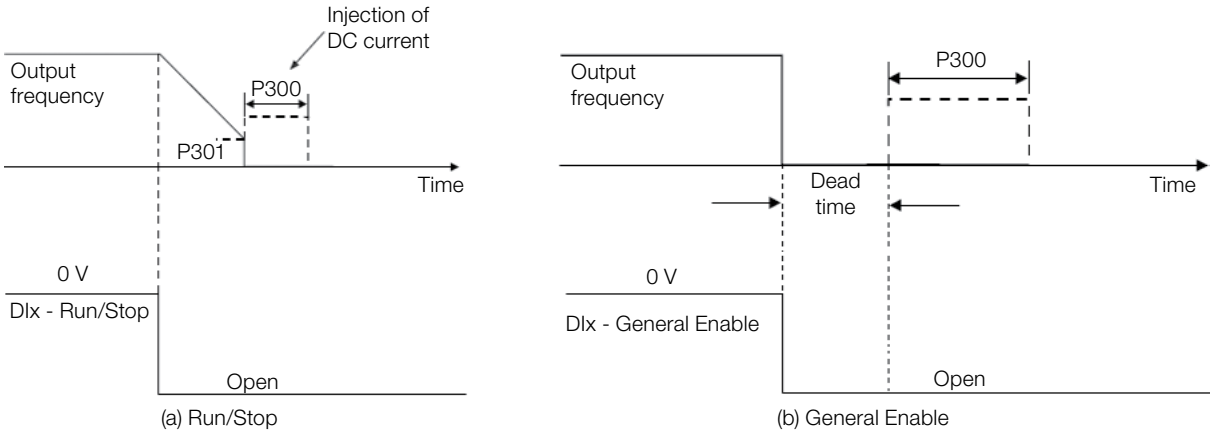

Figure 11.8: *(a) and (b) Actuation of DC Braking*

During the braking process, if the inverter is enabled, the braking is interrupted and the inverter will start operating normally.

ATTENTION!
The DC Braking can continue acting even if the motor has already stopped. Be careful with the thermal dimensioning of the motor for short-period cyclic braking.

P301 – Frequency to Begin DC Braking at Stop

Adjustable Range:	0.0 to 300.0 Hz	**Factory Setting:**	3.0 Hz

Description:

This parameter establishes the initial point to apply the DC Braking at the stop when the inverter is disabled by ramp, as per Figure 11.8 on page 11-9.

P302 – Voltage Applied to the DC Braking

Adjustable Range:	0.0 to 100.0 %	**Factory Setting:**	20.0 %

Description:

This parameter sets the DC voltage (DC Braking torque) applied to the motor during the braking.

The setting must be done by gradually increasing the value of P302, which varies from 0.0 to 100.0 % of the rated braking voltage, until the desired braking is obtained.

The rated braking voltage is the DC voltage value, which results in the rated current for the motor with power matched to the inverter. Therefore, if the inverter has a power too much higher than the motor, the braking torque will be too low. On the other hand, if the opposite is true, overcurrent may occur during the braking, as well as overheating of the motor.

11.5 AVOIDED FREQUENCY

This inverter function prevents the motor from operating permanently at frequency values in which, for example, the mechanical system goes into resonance (causing excessive vibration or noises).

P303 – Skip Frequency 1

Adjustable Range:	0.0 to 300.0 Hz	**Factory Setting:**	0.0 Hz

P304 – Skip Frequency 2

Adjustable Range:	0.0 to 300.0 Hz	**Factory Setting:**	0.0 Hz

P306 – Skip Band

Adjustable Range:	0.0 to 25.0 Hz	**Factory Setting:**	0.0 Hz

Description:

The actuation of those parameters is done as presented in Figure 11.9 on page 11-10 below.

The passage by the avoided frequency band (2xP306) is done through acceleration/deceleration ramp.

The function does not operate correctly if two bands of “Avoided Frequency” overlap.

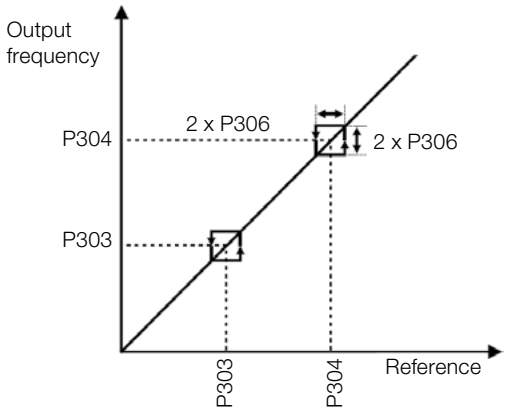

Figure 11.9: *Actuation of the avoided frequency*

12 DIGITAL AND ANALOG INPUTS AND OUTPUTS

This section presents the parameters to configure the CFW100 inputs and outputs. This configuration depends on the plug-in module, as per Table 12.1 on page 12-1.

Table 12.1: *I/O configurations of the CFW100*

Functions								Accessory
DI	AI	DOR	USB	RS485	CAN	BLUETOOTH	Supply 5 V	
4	-	-	-	-	-	-	1	Without Accessory
4	1	1	-	-	-	-	1	CFW100-IOAR
4	-	-	1	-	-	-	1	CFW100-CUSB
4	-	-	-	1	-	-	1	CFW100-CRS485
4	-	-	-	-	1	-	1	CFW100-CCAN
4	-	-	-	-	-	1	1	CFW100-CBLT

DI – Digital Input DOR – Relay Digital Output AI – Analog Input

NOTE!
CFW100 HMI shows just the parameters related to the resources available in the plug-in module connected to the product.

12.1 ANALOG INPUTS

With the analog inputs, it is possible, for instance, to use an external frequency reference or to connect a sensor in order to measure temperature (PTC). Details for those configurations are described in the parameters below.

P018 – Analog Input Value AI1

Adjustable Range:	-100.0 to 100.0 %	**Factory Setting:**	
Properties:	ro		

Description:

Those read-only parameters indicate the value of the analog inputs AI1 in percentage of the full scale. The indicated values are those obtained after the offset action and multiplication by the gain. Check the description of parameters P230 to P245.

P230 – Dead Zone of the Analog Inputs

Adjustable Range:	0 = Inactive 1 = Active	**Factory Setting:**	0
Properties:	cfg		

Description:

This parameter acts just for the analog inputs (AIx) programmed as frequency reference, and defines if the dead zone in those inputs is Active (1) or Inactive (0).

If the parameter is configured as Inactive (P230 = 0), the signal in the analog inputs will actuate on the frequency reference from the minimum point (0 V / 0 mA / 4 mA or 10 V / 20 mA), and it will be directly related to the minimum frequency set in P133. Check Figure 12.1 on page 12-2.

If the parameter is set as Active (P230 = 1), the signal in the analog inputs will have a dead zone, where the frequency reference remains at the Minimum frequênсy value (P133), even with the variation of the input signal. Check Figure 12.1 on page 12-2.

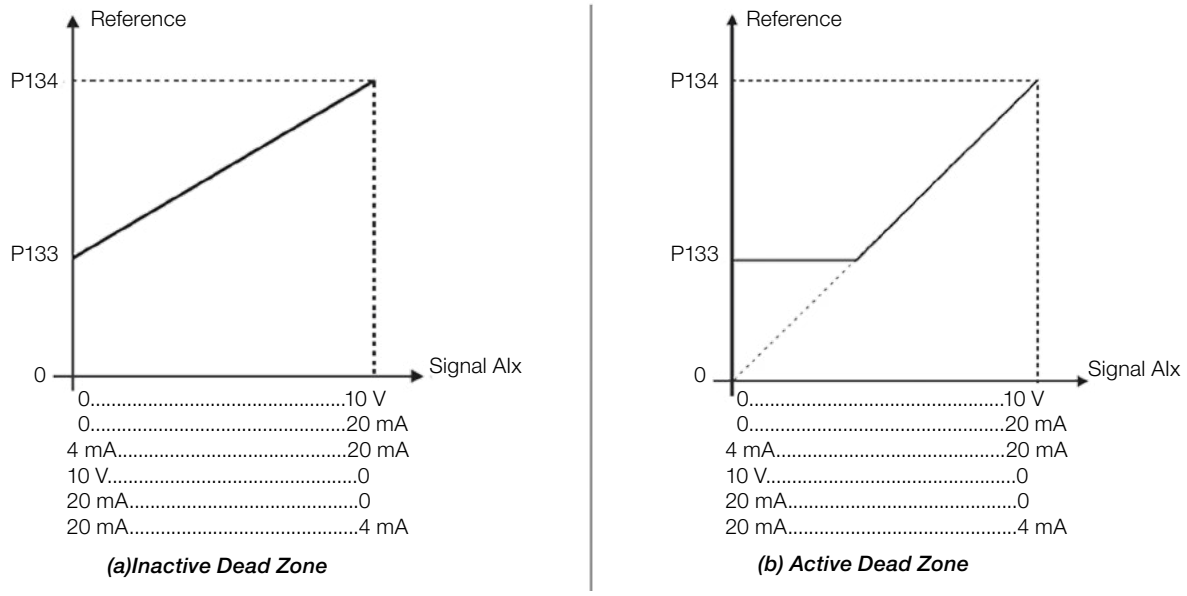

Figure 12.1: *(a) and (b) Actuation of the analog inputs with inactive dead zone and active dead zone*

P231 – AI1 Signal Function

Adjustable Range:	0 = Frequency Reference 1 to 6 = Not Used 7 = Use of SoftPLC	**Factory Setting:**	0
Properties:	cfg		

Description:

These parameters define the analog input functions.

When the 0 option is selected (Reference Frequency), the analog inputs can provide the reference for the motor, subject to the specified limits (P133 and P134) and to the action of the ramps (P100 to P103). However, in order to do so, it is also necessary to configure parameters P221 and/or P222, by selecting the use of the desired analog input. For further detail, refer to the description of those parameters in chapter 7 LOGICAL COMMAND AND FREQUENCY REFERENCE on page 7-1.

Option 7 (SoftPLC) configures the input to be used by the programming done in the memory area reserved for the SoftPLC function. For further details, refer to the SoftPLC user's manual.

P232 – AI1 Input Gain

Adjustable Range:	0.000 to 9.999	**Factory Setting:**	1.000

P234 – AI1 Input Offset

Adjustable Range:	-100.0 to 100.0 %	**Factory Setting:**	0.0 %

P235 – AI1 Input Filter

Adjustable Range:	0.00 to 16.00 s	**Factory Setting:**	0.00 s
Properties:			

Description:

Each analog input of the inverter is defined by the steps of calculation of SIGNAL, OFFSET, GAIN, FILTER, FUNCTION and VALUE AIx, as shown in Figure 12.2 on page 12-3.

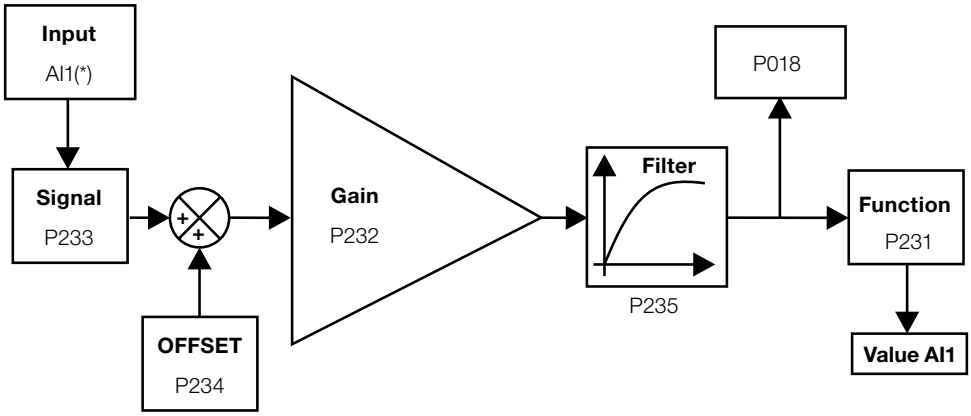

(*) Control terminal available on the CFW100-IOAR accessory.

Figure 12.2: *Block diagram of the analog inputs - AI1*

P233 – AI1 Input Signal

Adjustable Range:	0 = 0 to 10 V / 20 mA 1 = 4 to 20 mA 2 = 10 V / 20 mA to 0 3 = 20 to 4 mA	**Factory Setting:**	0
Properties:			

Description:

These parameters configure the signal type (if current or voltage) that will be read in each analog input, as well as its variation range. In options 2 and 3 of the parameters, the reference is inverse, that is, the maximum frequency is obtained with the minimum reference.

In the CFW100-IOAR plug-in module, DIP Switch S1:1 in ON configures the input AI1 for current signal.

For further details, refer to the Installation, Configuration and Operation Guide of the CFW100-IOAR I/O Expansion Module. Table 12.2 on page 12-3 summarizes the configuration and equation of the analog input.

Table 12.2: *AIx configuration and equation*

Signal	P233	DIP Switch	Equation AIx (%)
0 to 10 V	0	OFF	$AIx = \left(\frac{AIx(V)}{10\ V} \times (100\ \%) + OFFSET\right) \times GAIN$
0 to 20 mA	0	ON	$AIx = \left(\frac{AIx(mA)}{20\ mA} \times (100\ \%) + OFFSET\right) \times GAIN$
4 to 20 mA	1	ON	$AIx = \left(\left(\frac{(AIx(mA) - 4\ mA)}{16\ mA}\right) \times (100\ \%) + OFFSET\right) \times GAIN$
10 to 0 V	2	OFF	$AIx = 100\ \% - \left(\frac{AIx(V)}{10\ V} \times (100\ \%) + OFFSET\right) \times GAIN$
20 to 0 mA	2	ON	$AIx = 100\ \% - \left(\frac{AIx(mA)}{20\ mA} \times (100\ \%) + OFFSET\right) \times GAIN$
20 to 4 mA	3	ON	$AIx = 100\ \% - \left(\left(\frac{(AIx(mA) - 4\ mA)}{16\ mA}\right) \times (100\ \%) + OFFSET\right) \times GAIN$

For example: AIx = 5 V, OFFSET = -70.0 %, Gain = 1.000, with signal of 0 to 10 V, that is, AIx_{ini} = 0 and AIx_{FE} = 10.

$$AIx(\%) = \left(\frac{5}{10} \times (100\ \%) + (-70\ \%)\right) \times 1 = -20.0\ \%$$

Another example: AIx = 12 mA, OFFSET = -80.0 %, Gain = 1.000, with signal of 4 to 20 mA, that is, AIx_{ini} = 4 and AIx_{FE} = 16.

$$AIx(\%) = \left(\frac{12-4}{16} \times (100\ \%) + (-80\ \%)\right) \times 1 = -30.0\ \%$$

AIx' = –30.0 % means that the motor will spin forward with a reference in module equal to 30.0 % of P134, if the signal AIx function is "Frequency Reference".

In the case of filter parameters (P235), the value set corresponds to the time constant used to filter the input signal read. Therefore, the filter response time is around three times the value of this time constant.

12.2 FREQUENCY INPUT

A frequency input consists of a fast digital input able to convert the frequency of the pulses in the input into a proportional signal with 10-bit resolution. After the conversion, this signal is used as an analog signal for frequency reference, process variable, for example.

According to the block diagram of Figure 12.3 on page 12-4, the signal in frequency is converted into a digital quantity in 10 bits by means of the block "Calc. Hz / %", where parameters P248 and P250 define the input signal frequency band, while parameter P022 shows the frequency of the pulses in Hz.

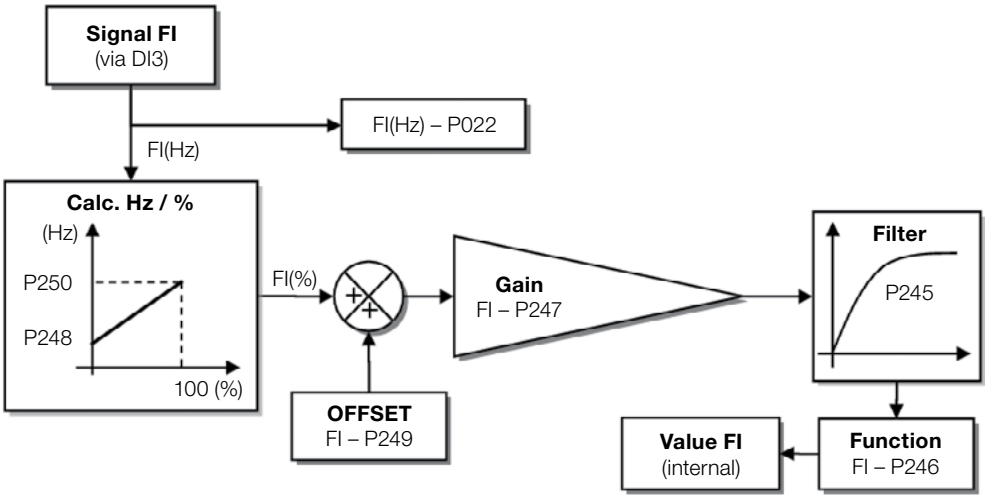

Figure 12.3: *Block diagram of frequency input – FI (DI3)*

12

Digital input DI3 is pre-defined for frequency input with operating capacity in a wide band from 1 to 3000 Hz.

P022 – Value of Frequency Input

Adjustable Range:	1 to 3000 Hz	**Factory Setting:**	
Properties:	ro		

Description:

Value in hertz of the frequency input FI.

> **NOTE!**
> The operation of parameters P022 as well as of the frequency input, depends on the activation of P246.

P245 – Filter of the Frequency Input

Adjustable Range:	0.00 to 16.00 s	**Factory Setting:**	0.00 s

Description:

This parameter sets the time constant of the Frequency Input filter. It is intended to attenuate sudden changes in its value.

P246 – Frequency Input FI

Adjustable Range:	0 = Inactive 1 = Active	**Factory Setting:**	0
Properties:	cfg		

Description:

When set to "1", this parameter activates the frequency input, making the function of the digital input DI3 in P265 be ignored, as well as the value of bit "2" of P012 is maintained in "0". On the other hand, when set to "0", the frequency input is inactive, keeping parameter P022 in zero.

P247 – Input Gain in Frequency FI

Adjustable Range:	0.000 to 9.999	**Factory Setting:**	1.000

P248 – Minimum Frequency Input FI

Adjustable Range:	1 to 3000 Hz	**Factory Setting:**	100 Hz

P249 – Input Offset in Frequency FI

Adjustable Range:	-100.0 to 100.0 %	**Factory Setting:**	0.0 %

P250 – Maximum Frequency Input FI

Adjustable Range:	1 to 3000 Hz	**Factory Setting:**	1000 Hz

Description:

Those parameters define the behavior of the frequency input according to the equation:

$$FI = \left(\left(\frac{FI\ (Hz) - P248}{P250 - P248}\right) x\ (100\ \%) + P249\right) x\ P247$$

Parameters P248 and P250 determine the operation range of the frequency input (FI), while parameters P249 and P247 determine the offset and gain, respectively. For example, FI = 2000 Hz, P248 = 1000 Hz, P250 = 3000 Hz, P249 = -70.0 % and P247 = 1.000, thus:

$$FI = \left(\left(\frac{2000 - 1000}{3000 - 1000}\right) x\ (100\ \%) - 70\ \%\right) x\ 1.000 = 20.0\ \%$$

The value FI = -20.0 % means that the motor will spin in the opposite direction with a reference in module equal 20.0 % of P134, with the function of the FI signal for "Frequency Reference" (P221 = 4).

When P246 = 1, the digital input DI3 is pre-defined for frequency input, regardless the value of P265, with operating capacity in the band from 0 to 3000 Hz in 10 Vpp.

The time constant of the digital filter for the frequency input is defined by means of parameter P245.

12.3 DIGITAL INPUT

Below is a detailed description of the parameters for the digital inputs.

P012 – Status of Digital Inputs

Adjustable Range:	Bit 0 = DI1 Bit 1 = DI2 Bit 2 = DI3 Bit 3 = DI4	**Factory Setting:**	
Properties:	ro		

Description:

Using this parameter, it is possible to view the status of the product digital inputs. Refer to parameter P027 in section 6.1 INVERTER DATA on page 6-1.

The P012 value is indicated in hexadecimal, where each bit of the number indicates the state of a digital input, that is, if BIT0 is “0”, DI1 is inactive; if BIT0 is “1”, DI1 is active, and so on, up to DI4.

The activation of DIx depends on the signal in the digital input, as per Table 12.3 on page 12-6, which lists the limit voltage to activate “VTH”, the limit voltage to deactivate “VTL” and the indication of state of DIx in parameter P012.

Table 12.3: *Values of P012 for x from 1 to 4*

Limit Voltage in DIx	P012
V_{TL} > 10 V	BIT_{x-1} = 0
V_{TH} < 3 V	BIT_{x-1} = 1

NOTE!
Parameter P012 requires the user to know the conversion between binary and hexadecimal numerical system.

P263 – Function of Digital Input DI1

P264 – Function of Digital Input DI2

P265 – Function of Digital Input DI3

P266 – Function of Digital Input DI4

Adjustable Range:	0 to 48	**Factory Setting:**	P263 = 1 P264 = 8 P265 = 0 P266 = 0
Properties:	cfg		

Description:

These parameters allow configuring the digital input function, according to the adjustable range listed in Table 12.4 on page 12-7.

Table 12.4: *Digital input functions*

Value	Description	Dependence
0	Not Used	--
1	Run/Stop command	P224 = 1 or P227 = 1
2	General Enable command	P224 = 1 or P227 = 1
3	Quick Stop command	P224 = 1 or P227 = 1
4	Forward Run command	(P224 = 1 and P223 = 4) or (P227 = 1 and P226 = 4)
5	Reverse Run command	P224 = 1 or P227 = 1
6	Start command	P224 = 1 or P227 = 1
7	Stop command	P224 = 1 or P227 = 1
8	Forward Rotation Direction	P223 = 4 or P226 = 4
9	Local/Remote selection	P220 = 4
10	JOG command	P225 = 2 or P228 = 2
11	Electronic Potentiometer: Accelerate E.P.	P221 = 7 or P222 = 7
12	Electronic Potentiometer: Decelerate E.P.	P221 = 7 or P222 = 7
13	Multispeed reference	P221 = 8 or P222 = 8
14	2nd Ramp selection	P105 = 2
15...17	Not Used	-
18	No External Alarm	-
19	No External Fault	-
20	Fault Reset	Active fault
21...23	Not Used	-
24	Disable Flying Start	P320 = 1 or 3
25	Regulates DC link	-
26	Locks Setting	-
27...31	Not Used	-
32	Multispeed Reference with 2nd Ramp	P221 = 8 or P222 = 8 and P105 = 2
33	Electronic Potentiometer: Accelerates E.P. with 2nd Ramp	P221 = 7 or P222 = 7 and P105 = 2
34	Electronic Potentiometer: Decelerates E.P. with 2nd Ramp	P221 = 7 or P222 = 7 and P105 = 2
35	Forward Run with 2nd Ramp	P224 = 1 or P227 = 1 and P105 = 2
36	Reverse Run with 2nd Ramp	P224 = 1 or P227 = 1 and P105 = 2
37	Accelerates E.P./Start	P224 = 1 or P227 = 1 P221 = 7 or P222 = 7
38	Decelerates E.P./ Stop	P224 = 1 or P227 = 1 P221 = 7 or P222 = 7
39	Stop Command	P224 = 1 or P227 = 1
40	Safety Switch Command	P224 = 1 or P227 = 1
41	Function 1 Application	-
42	Function 2 Application	-
43	Function 3 Application	-
44	Function 4 Application	-
45	Function 5 Application	-
46	Function 6 Application	-
47	Function 7 Application	-
48	Function 8 Application	-

a) RUN/STOP

It enables or disables the motor rotation through the acceleration and deceleration ramp.

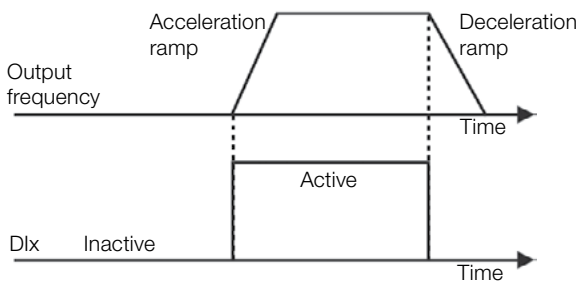

Figure 12.4: *Example of the Run/Stop function*

b) GENERAL ENABLE

It enables the motor rotation through the acceleration ramp and disables it by cutting off the pulses immediately; the motor stops by inertia.

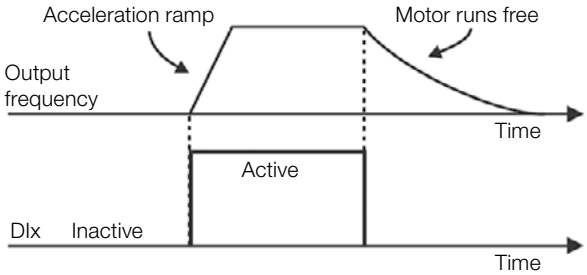

Figure 12.5: *Example of the General Enable function*

c) QUICK STOP

When inactive, it disables the inverter by the emergency deceleration (P107).

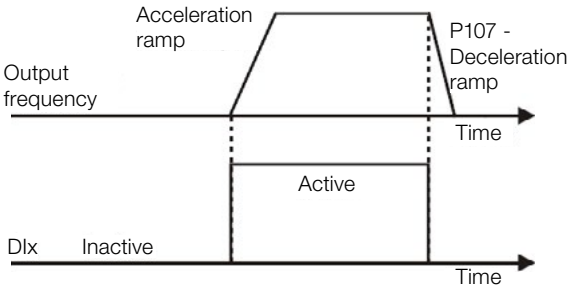

Figure 12.6: *Example of the Quick Stop function*

d) FORWARD/REVERSE

This command is the combination of two DIS: one programmed for forward run and the other for reverse run.

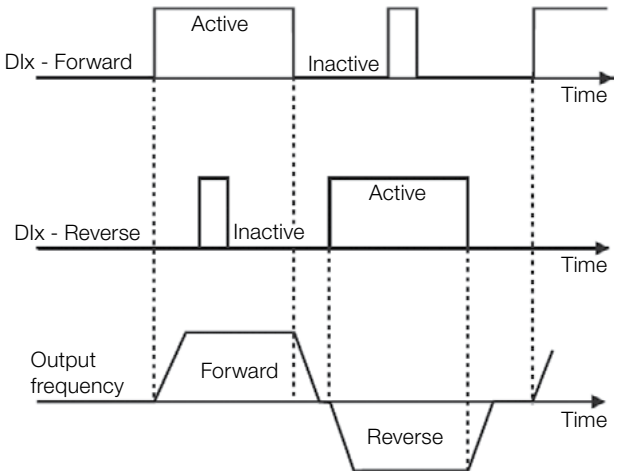

Figure 12.7: *Example of the Forward /Reverse function*

e) START / STOP

This function tries to reproduce the activation of a three-wire direct start with retention contact, where a pulse in the DIx-Start enables the motor spin while the DIx-Stop is active.

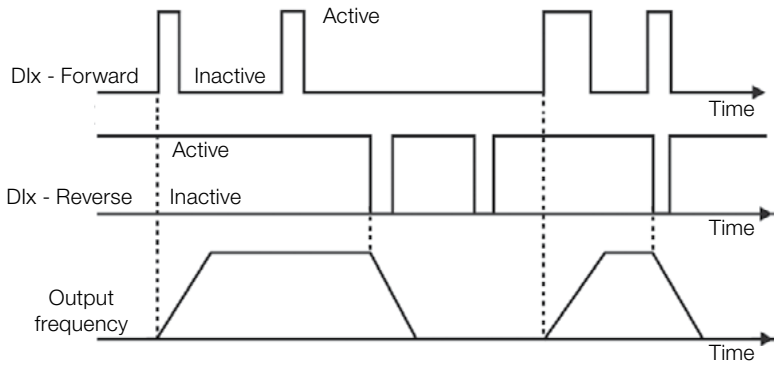

Figure 12.8: *Example of the Start / Stop*

> **NOTE!**
> All the digital inputs set for General Enable, Fast Stop, Forward Run/Reverse Run and Start/Stop must be in the "Active" state so that the inverter can enable the motor spin.

f) DIRECTION OF ROTATION

If the DIx is Inactive, the Direction of Rotation is Forward, otherwise, the direction of rotation will be REVERSE.

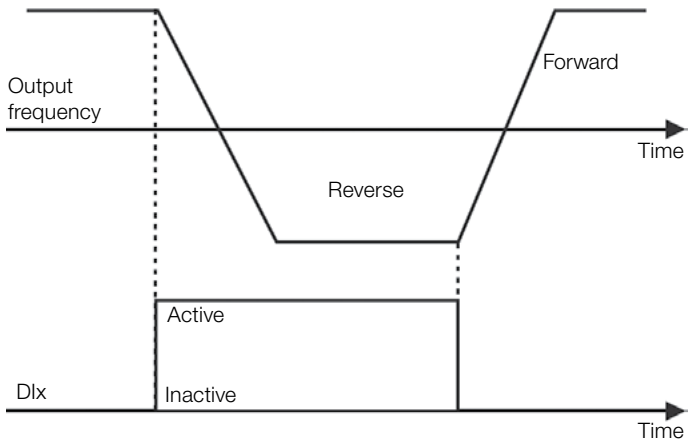

Figure 12.9: *Example of the Direction of Rotation function*

g) LOCAL / REMOTO

If DIx is inactive, the Local command is selected, reverse the Remote command is selected.

h) JOG

The JOG command is the combination of the Run/Stop command with a speed reference via parameter P122.

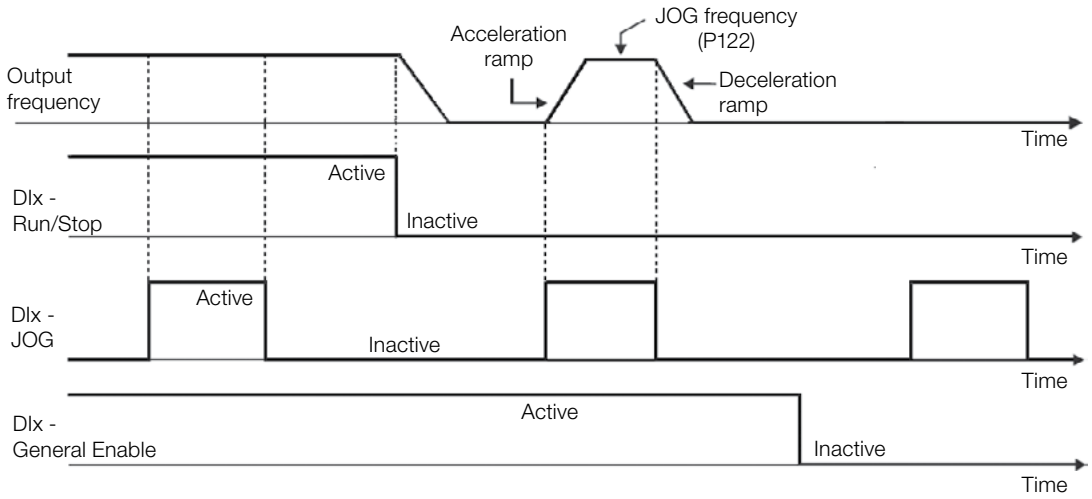

Figure 12.10: *Example of the JOG function*

i) ELECTRONIC POTENTIOMETER (E.P.)

The E.P. function enables the setting of the speed via digital inputs programmed for Accelerate E.P. and Decelerate E.P. The basic principle of this function is similar to the sound volume and intensity control of electronic appliances.

The operation of the E.P. function is also affected by the behavior of parameter P120, that is, if P120 = 0 the E.P. reference initial value will be P133; if P120 = 1 the initial value will be the last reference value before the disabling of the inverter, and if P120 = 2, the initial value will be the reference via P121 keys.

Besides, the E.P. reference can be reset by activating both Accelerate E.P. and Decelerate E.P. inputs when the inverter is disabled.

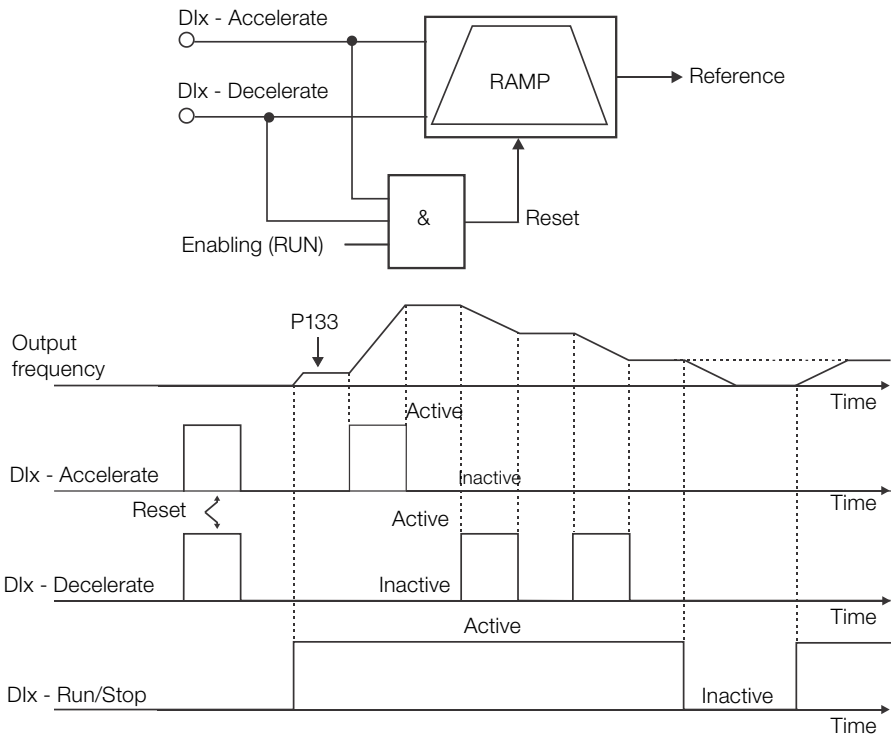

Figure 12.11: *Example of the Electronic Potentiometer (E.P.) function*

j) MULTISPEED

The Multispeed reference, as described in item 7.2.3 Parameters for Reference Frequency on page 7-7, enables, by means of the combination of up to three digital inputs, the selection of one from eight reference levels predefined in parameters P124 to P131. For further details, refer to chapter 7 LOGICAL COMMAND AND FREQUENCY REFERENCE on page 7-1.

k) 2nd RAMP

If DIx is inactive, the inverter uses the default ramp by P100 and P101, otherwise, it will use the 2nd Ramp by P102 and P103.

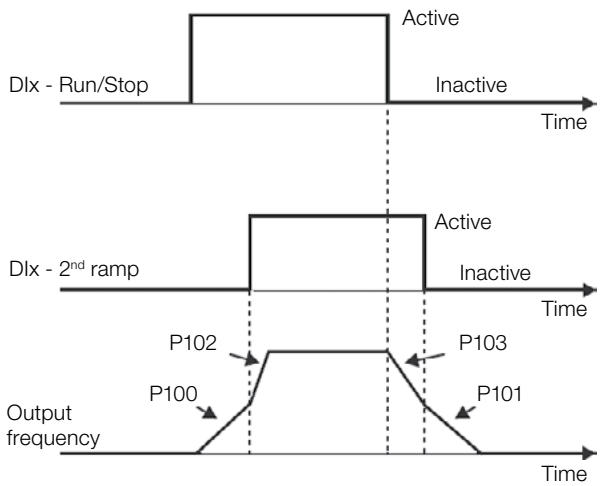

Figure 12.12: *Example of the 2nd Ramp function*

l) NO EXTERNAL ALARM

If DIx is inactive, the inverter will activate the external alarm A090.

m) NO EXTERNAL FAULT

If DIx is inactive, the inverter will activate the external fault F091. In this case, the PWM pulses are disabled immediately.

n) FAULT RESET

Once the inverter is in the fault status and the fault origin condition is no longer active, the fault status will be reset in the transition of the DIx programmed for this function.

o) DISABLE FS

It allows the DIx, when active, to disable the action of the Flying Start function preset in parameter P320 = 1 or 2. When the DIx is inactive, the Flying Start function operates normally again. Refer to section 11.3 FLYING START / RIDE-THROUGH on page 11-6.

p) LOCK PROG

When the DIx input is active, parameters cannot be changed, no matter the values set in P000 and P200. When the DIx input is Inactive, the modification of parameters will depend on the values set in P000 and P200.

q) MULTISPEED, ELECTRONIC POTENTIOMETER, FORWARD/REVERSE WITH 2nd RAMP

It combines the Multispeed, E.P. and Forward Run/Reverse Run with 2nd Ramp primary functions in the same DIx digital input.

r) ACCELERATE E.P. - TURN ON / DECELERATE E.P. - TURN OFF

It consists of the Electronic Potentiometer function with capacity to enable the inverter by means of a pulse at the start, and a pulse for the stop when the output speed is minimum (P133).

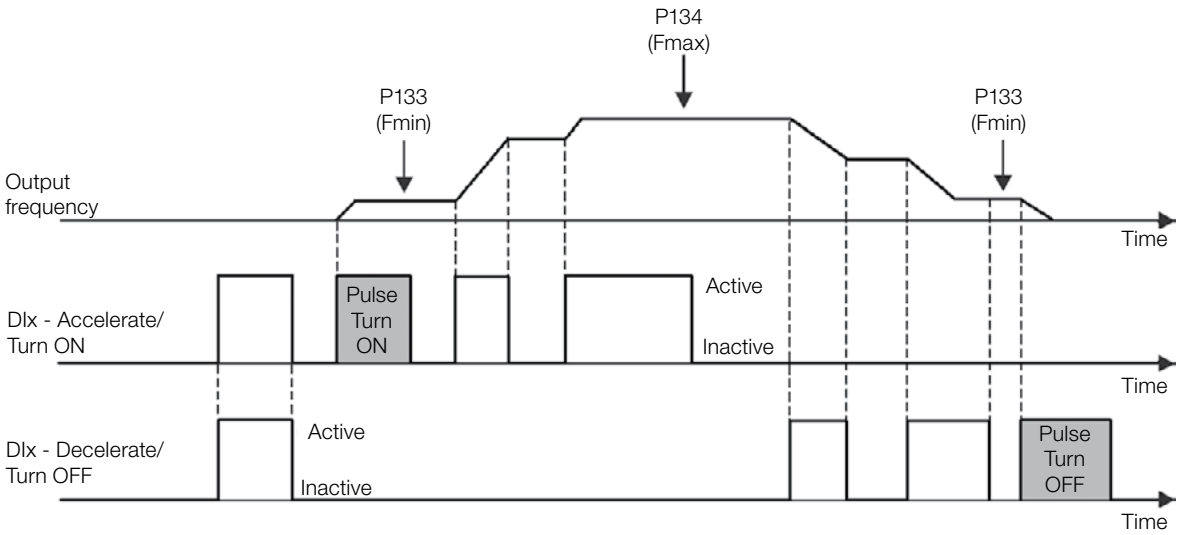

Figure 12.13: *Example of the Accelerate Turn ON / Decelerate Turn OFF*

s) STOP

Only on pulse in the Dix disables the inverter.

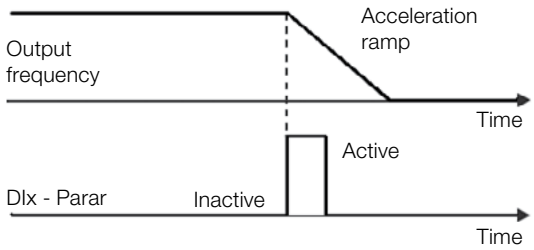

Figure 12.14: *Example the stop function*

t) SAFETY SWITCH

Only one inactive pulse in the Dix disables the inverter.

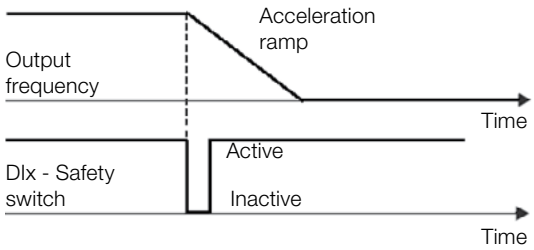

Figure 12.15: *Example of the Emergency function*

12.4 DIGITAL OUTPUTS

The CFW100 can activate only one relay digital output (DO1) with the CFW100-IOAR accessory connected to the product. The configuration of the digital output parameters follows the detailed description below.

P013 – Digital Output Status

Adjustable Range:	0h to 1h	**Factory Setting:**	
Properties:	ro		

Description:

By using this parameter, it is possible to view the CFW100 digital output status.

The value of P013 is indicated in hexadecimal, where each bit indicates the status of a digital output, that is, if the Bit0 is “0”, DO1 is inactive; if the Bit0 is “1”, DO1 is active.

> **NOTE!**
> Parameter P013 requires the user to know the conversion between binary and hexadecimal numerical system.

P275 – DO1 Output Function

Adjustable Range:	0 to 44	**Factory Setting:**	P275 = 13
Properties:			

Description:

These parameters define the DOx digital output function, as per Table 12.5 on page 12-14.

Table 12.5: Digital Output Functions

Value	Function	Description
0	Not used	It deactivates the digital output.
1	F* ≥ Fx	Active when the frequency reference F* (P001) is greater than Fx (P281).
2	F ≥ Fx	Active when the Output Frequency F (P002) is greater than Fx (P281).
3	F ≤ Fx	Active when the Output Frequency F (P002) is smaller than Fx (P281).
4	F = F*	Active if the Output Frequency F (P002) is equal to the reference F* (P001) (ramp end).
5	Not used	It deactivates the digital output.
6	Is > Ix	Active if the output current Is (P003) > Ix (P290).
7	Is < Ix	Active if the output current Is (P003) < Ix (P290).
8 to 9	Not used	It deactivates the digital output.
10	Remote	Active if the command is in the remote situation (REM).
11	Run	Active if the motor is running (active output PWM pulses).
12	Ready	Active if the inverter is ready for enabling.
13	Without fault	Active if the inverter has no faults.
14	Without F070	Active if the inverter has no overcurrent fault (F070).
15	Not used	It deactivates the digital output.
16	Without F021/F022	Active if the inverter has no overvoltage or undervoltage fault (F022 or F021).
17	Not used	It deactivates the digital output.
18	Without F072	Active if the inverter has no motor overload fault (F072).
19	4-20 mA OK	Active if AIx setting is 4 to 20 mA (P233 = 1 or 3) and AIx < 2 mA.
20	Not used	It deactivates the digital output.
21	Forward	Active if the inverter direction of rotation is forward.
22 to 23	Not used	It deactivates the digital output.
24	Ride-Through	Active if the inverter is executing the Ride-Through function.
25	Pre-Charge OK	Active if the pre-charge relay of the DC link capacitors was already activated.
26	With Fault	Active if the inverter has a fault.
27	Not used	It deactivates the digital output.
28	SoftPLC	It activates the output DOx according to the SoftPLC memory area. Check the SoftPLC user manual.
29 to 34	Not used	It deactivates the digital output.
35	Without Alarm	Active when the inverter has no alarms.
36	Without Fault and Alarm	Active when the inverter has neither alarms nor faults.
37	Function 1	-
38	Function 2	-
39	Function 3	-
40	Function 4	-
41	Function 5	-
42	Function 6	-
43	Function 7	-
44	Function 8	-

P281 – Frequency Fx

P282 – Hysteresis Fx

Adjustable Range:	0.0 to 300.0 Hz	**Factory Setting:**	P281 = 3.0 Hz P282 = 0.5 Hz
Properties:			

Description:

These parameters set the hysteresis and actuation level on the Fx output frequency signal and on the F* ramp input of the relay digital output. In this way, the relay commutation levels are “P281 + P282” and “P281 - P282”.

P290 – Current Ix

Adjustable Range:	0.0 to 10.0 A	**Factory Setting:**	1.0xInom
Properties:			

Description:

Current level to activate the relay output in the Is>Ix (6) and Is<Ix (7) functions. The actuation occurs on a hysteresis with upper and lower level by: P290 – 0.05xP295, that is, the equivalent value in Amperes for 5 % of P295 below P290.

13 FAULTS AND ALARMS

The problem detection structure in the inverter is based on the fault and alarm indication.

In case of fault, the locking the IGBTs and motor stop by inertia will occur.

The alarm works as a warning for the user of critical operating conditions and that may cause a fault if the situation is not corrected.

Refer to chapter 6 of the CFW100 user manual and the chapter QUICK REFERENCE OF PARAMETERS, ALARMS AND FAULTS on page 0-1 of this manual to obtain more information regarding Faults and Alarms.

13.1 MOTOR OVERLOAD PROTECTION (F072 AND A046)

The motor overload protection is based on the use of curves that simulate the heating and cooling of the motor in cases of overload. The motor overload protection fault and alarm codes are F072 and A046 respectively.

The motor overload is given considering the reference value In x FS (motor rated current multiplied by the duty factor), which is the maximum value at which the overload protection must not actuate, because the motor can work continuously at that current value without damages.

However, for that protection to actuate properly, the winding-temperature supervision (which corresponds to the time of heating and cooling of the motor) is estimated.

This winding-temperature supervision is approximated by a function called Ixt, which integrates the output current value from a level previously defined by P156. When the accumulated value reaches the limit, an alarm and/or fault are indicated

In order to ensure greater protection in case of restart, this function keeps the value integrated by the function Ixt in the inverter non-volatile memory. Thus, after the energizing, the function will use the Ixt value saved in this memory to perform a new evaluation of overload.

P156 – Overload Current

Adjustable Range:	0.1 to $2xI_{nom}$	**Factory Setting:**	P156 = $1.2xI_{nom}$

Description:

These parameters define the motor overload current (Ixt - F072). The motor overload current is the current value (P156) based on which the inverter will understand that the motor is operating in overload

The greater the difference between the motor current and the overload current (P156) the faster the actuation of fault F072.

It is recommended that parameter P156 (motor overload current at rated speed) be set at a value 10 % above the used motor rated current (P401).

In order to deactivate the motor overload function just set parameters P156 to values equal to or above two times the inverter rated current P295.

Figure 13.1 on page 13-2 shows the overload actuation time considering the normalized output current in relation to the overload current (P156), that is, for a constant output current with 150 % of overload, fault F072 occurs in 60 seconds. On the other hand, for output current value below P156, according to the output frequency, fault F072 does not occur. Whereas for values above 150 % of P156 the fault actuation time is below 60 s.

P037 – Motor Overload Ixt

Adjustable Range:	0.0 to 100.0 %	**Factory Setting:**	
Properties:	ro		

Description:

It indicates the present motor overload percentage or overload intergrator level. When this parameter reaches 6.3 %, the inverter will indicate the motor overload alarm (A046). Or when this parameter reaches 100 %, the "Motor Overload" fault (F072) will occur (F072).

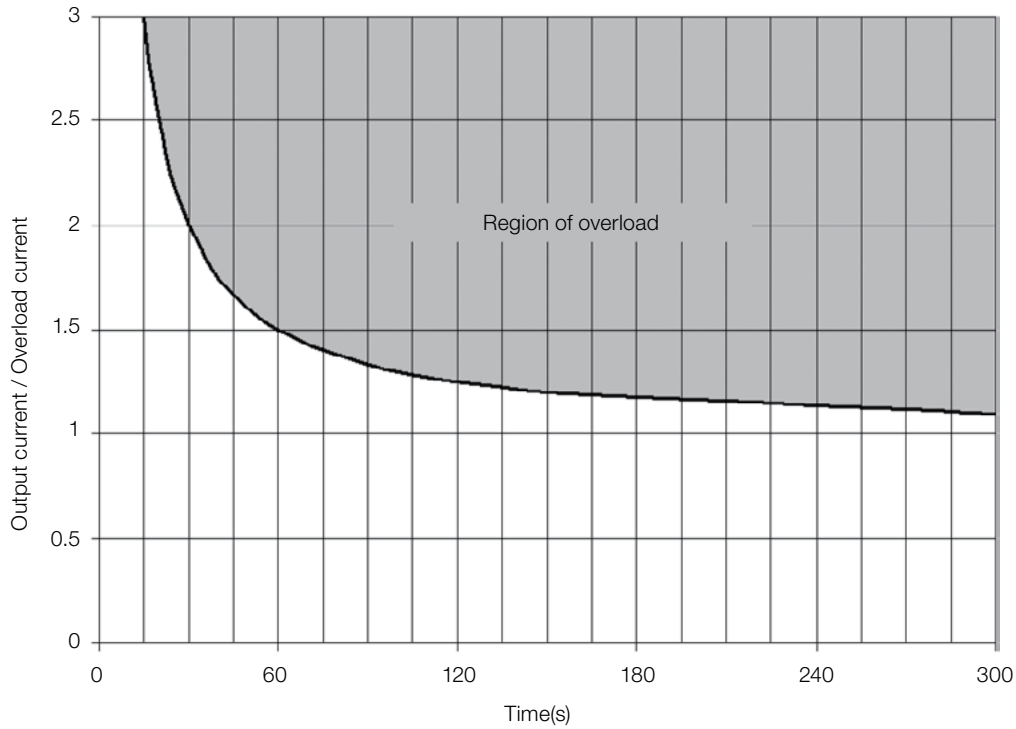

Figure 13.1: *Actuation of the motor overload*

13.2 IGBTS OVERLOAD PROTECTION (F051 AND A050)

The power module temperature is monitored and indicated in parameter P030 in degrees Celsius. This value is constantly compared to the overtemperature fault and alarm trigger value of the power module F051 and A050, according to Table 13.1 on page 13-2.

Table 13.1: *Overtemperature actuation levels of the power module*

Frame size	Model	Level A050	Level F051
A	1.6 A / 200 V	110 °C (230 °F)	120 °C (248 °F)
B	2.6 A / 200 V	110 °C (230 °F)	120 °C (248 °F)
C	4.2 A / 200 V	110 °C (230 °F)	120 °C (248 °F)

13.3 OVERCURRENT PROTECTION (F070)

The ground fault and output overcurrent protections act very fast by means of the hardware to instantly cut the output PWM pulses when the output current is high. Fault F070 corresponds to a current surge between output phases.

The protection current level depends on the used power module so as the protection is effective, still this value is well above the inverter rated operating current (P295).

13.4 LINK VOLTAGE SUPERVISION (F021 AND F022)

The DC link voltage is constantly compared to the maximum and minimum values according to the inverter power supply, as shown in Table 13.2 on page 13-3.

Table 13.2: *Levels of performance monitoring the voltage of the DC link*

Supply	Level F021	Level F022
100 to 120 Vac	230 Vdc	460 Vdc
200 to 240 Vac	200 Vdc	410 Vdc

13.5 VVW CONTROL MODE SELF-TUNING FAULT (F033)

If we set the motor stator resistance (P409) to a value too high in relation to the used inverter, the inverter will indicate fault F033.

13.6 REMOTE HMI COMMUNICATION FAULT ALARM (A700)

After connecting the remote HMI to the CFW100 terminals, the communication with the HMI is supervised so that alarm A700 is activated whenever this communication link is broken.

13.7 REMOTE HMI COMMUNICATION ERROR FAULT (F701)

The condition for fault F701 is the same as that of alarm A700, but it is necessary that the HMI be the source for some command or reference (HMI Keys option) in parameters P220 to P228.

13.8 AUTO-DIAGNOSIS ALARM (A084)

During the programming of the inverter, or before starting loading the factory default (P204 = 5 or 6), the inverter identifies the power hardware in order to obtain information on the module voltage, current and trigger, the power module.

Alarm A084 indicates something wrong happened during the identification of the hardware: nonexistent inverter model, some loose connection cable or damaged internal circuit.

NOTE!
When this alarm occurs, contact WEG.

13.9 FAULT IN THE CPU (F080)

The execution of the inverter firmware is monitored at several levels of the firmware internal structure. When some internal fault is detected in the execution, the inverter will indicate F080.

NOTE!
When this fault occurs, contact WEG.

13.10 SAVE USER FUNCTION FAULT (F081)

This fault occurs during the attempt to save (P204 = 9) more than 32 parameters with values different from the factory default (P204 = 5 or 6) or the Save User function is protected against writing.

13.11 COPY FUNCTION FAULT (F082)

In case the flash memory module (MMF) has been previously loaded with parameters of a “different” version from that of the inverter to which it is trying to copy the parameters, the operation will not be executed and the HMI will indicate fault F082. It is considered a “different” version those which are different in “x” or “y”, assuming that the number of the software versions are represented as Vx.yz.

13.12 EXTERNAL ALARM (A090)

It is necessary to set the digital input Dix for "without external alarm". If DIx is inactive, the inverter will activate the external alarm A090. When DIx is activated, the alarm message will automatically disappear from the HMI display. The motor keeps running normally, regardless the state of this input.

13.13 EXTERNAL FAULT (F091)

It is necessary to set the digital input Dix for "without external fault". If DIx is inactive, the inverter will activate the external fault F091. In this case, the PWM pulses are immediately disabled.

13.14 FAULT HISTORY

The inverter is able to store a set of data on the last three faults occurred, such as: fault number, current (P003), DC link voltage (P004), output frequency (P005), power module temperature (P030).

P048 – Present Alarm

P049 – Present Fault

Adjustable Range:	0 to 999	**Factory Setting:**	
Properties:	ro		

Description:

They indicate the alarm number (P048) or the fault (P049) that may be present in the inverter.

P050 – Last Fault

P060 – Second Fault

P070 – Third Fault

Adjustable Range:	0 to 999	**Factory Setting:**	
Properties:	ro		

Description:

They indicate the number of the occurred fault.

P051 – Output Current Last Fault

Adjustable Range:	0.0 to 10.0 A	**Factory Setting:**	
Properties:	ro		

Description:

They indicate the output current at the moment of the occurred fault.

P052 – Last Fault DC Link

Adjustable Range:	0 to 524 V	**Factory Setting:**	
Properties:	ro		

Description:

They indicate the DC link voltage at the moment of the occurred fault.

P053 – Output Frequency Last Fault

Adjustable Range:	0.0 to 300.0 Hz	**Factory Setting:**	
Properties:	ro		

Description:

They indicate the output frequency at the moment of the occurred fault.

P054 – Temperature in the IGBTs Last Fault

Adjustable Range:	0.0 to 200.0 °C	**Factory Setting:**	
Properties:	ro		

Description:

These parameters indicate the IGBTs temperature at the moment of the occurred fault.

13.15 FAULT AUTO-RESET

This function allows the inverter to execute the automatic reset of a fault by means of the setting of P340.

NOTE!
The function auto-reset is locked if the same fault occurs three times in a row within 30 seconds after the reset.

P340 – Auto-Reset Time

Adjustable Range:	0 to 255 s	**Factory Setting:**	0 s

Description:

It defines the interval after a fault to activate the inverter auto-reset. If the value of P340 is zero the fault autoreset function is disabled.

14 READING PARAMETERS

It is important to point out that all the parameters of this group can only be viewed on the HMI display, and cannot be changed by the user.

P001 – Speed Reference

Adjustable Range:	0 to 9999	**Factory Setting:**	
Properties:	ro		

Description:

This parameter presents, regardless the origin source, the speed reference value in the unit and scale defined for the reference by P208, P209 and P210. The full scale and reference unit in the factory default are 60.0 Hz for P204 = 5 and 50.0 Hz for P204 = 6.

P002 – Output Speed (Motor)

Adjustable Range:	0 to 9999	**Factory Setting:**	
Properties:	ro		

Description:

Parameter P002 indicates the speed imposed to the inverter output at the same scale defined for P001. In this parameter, the compensations made to the output frequency are not shown. In order to see them, use P005.

P003 – Motor Current

Adjustable Range:	0.0 to 10.0 A	**Factory Setting:**	
Properties:	ro		

Description:

It indicates the inverter output current in amperes RMS (Arms).

P004 – DC Link Voltage (Ud)

Adjustable Range:	0 to 524 V	**Factory Setting:**	
Properties:	ro		

Description:

It indicates the DC link direct current voltage in (V).

P005 – Output Frequency (Motor)

Adjustable Range:	0.0 to 300.0 Hz	**Factory Setting:**	
Properties:	ro		

Description:

Real frequency instantly applied to the motor in Hertz (Hz).

P006 – Inverter Status

Adjustable Range:	According to Table 14.1 on page 14-2	**Factory Setting:**	
Properties:	ro		

Description:

It indicates one of the possible inverter status. The following table contains the description of each state, as well as the indication on the HMI.

Table 14.1: *Inverter status- P006*

P006	Status	HMI	Description
0	READY	rdY	Indicates the inverter is ready to be enabled.
1	RUN	60.0 Hz	Indicates the inverter is enabled.
2	SUB	Sub	Indicates the voltage in the inverter is too low for operation (undervoltage), and will not accept the enabling command.
3	FAULT	F072	Indicates the inverter is in the fault status. The fault code will flash.
4	NOT USED	-	Without indication.
5	CONFIGURATION	ConF → P002 Hz	Indicates the inverter has incompatible parameter programming. After pressing the key P, it will keep showing an arrow until the incorrect setting is corrected, as shown in the figure. Refer to sect section 5.3 SITUATIONS FOR CONFIG STATUS on page 5-4.

P007 – Output Voltage

Adjustable Range:	0 to 240 V	**Factory Setting:**	
Properties:	ro		

Description:

It indicates the line voltage in inverter output, in Volts (V).

P009 – Motor Torque

Adjustable Range:	-100.0 to 100.0 %	**Factory Setting:**	
Properties:	ro, VVW		

Description:

It indicates the torque developed by the motor in relation to the rated torque.

P011 – Power Factor

Adjustable Range:	-10.0 to 10.0 A	**Factory Setting:**	
Properties:	ro		

Description:

It indicates the active current in the inverter output in amperes RMS (Arms).

P012 – Digital Input Status

Refer to section 12.3 DIGITAL INPUT on page 12-6.

P013 – Digital Output Status

Refer to section 12.4 DIGITAL OUTPUTS on page 12-12.

P018 – Analog Input Value AI1

Refer to section 12.1 ANALOG INPUTS on page 12-1.

P022 – Frequency Input Value FI in Hz

Refer to section 12.2 FREQUENCY INPUT on page 12-4.

P023 – Version of Main Software

P029 – Power Hardware Configuration

Refer to section 6.1 INVERTER DATA on page 6-1.

P030 – Power Module Temperature

Adjustable Range:	-200.0 to 200.0 °C	**Factory Setting:**	
Properties:	ro		

Description:

Temperature in °C measured inside the power module by the internal NTC.

P037 – Motor Overload Ixt

Refer to section 13.1 MOTOR OVERLOAD PROTECTION (F072 AND A046) on page 13-1.

P047 – CONFIG Status

Adjustable Range:	0 to 999	**Factory Setting:**	
Properties:	ro		

Description:

This parameter shows the origin situation of CONFIG mode. Refer to section 5.3 SITUATIONS FOR CONFIG STATUS on page 5-4.

The reading parameters in the range from P048 to P075 are detailed in section 13.14 FAULT HISTORY on page 13-4.

The reading parameters P295 and P296 are detailed in the section 6.1 INVERTER DATA on page 6-1.

The reading parameter P680 is detailed in the section 7.3 CONTROL WORD AND INVERTER STATUS on page 7-10.

15 COMMUNICATION

In order to exchange information via communication network, the CFW100 features several standardized communication protocols, such as Modbus, CANopen and DeviceNet.

For further details referring to the inverter configuration to operate in those protocols, refer to the CFW100 user's manual for communication with the desired network. Below are listed the parameters related to the communication.

15.1 SERIAL RS-485 INTERFACE

P308 – Serial Address

P310 – Serial Baud Rate

P311 – Serial Interface Byte Configuration

P312 – Serial Protocol

P313 – Action for Communication Error

P314 – Serial Watchdog

P316 – Serial Interface Status

P681 – Motor Speed in 13 Bits

P682 – Control Word via Serial

P683 – Speed Reference via Serial

Description:

Parameter for configuration and operation of the RS-485, USB and Bluetooth. For a detailed description, refer to the Modbus RTU, user's manual, supplied in electronic format in the CD-ROM that comes with the product.

P770 – Bluetooth Local Name

Adjustable Range:	0 to 9999	**Factory Setting:**	Inverter serial number
Properties:			

Description:

This parameter identifies the Bluetooth device with a friendly name on the network. This name is limited to the four digits available on the inverter display.

The default value of this parameter is the last four digits of the inverter serial number.

> **NOTE!**
> Parameter P770 is only available with the Bluetooth accessory connected.

P771 – Bluetooth Parity Password

Adjustable Range:	0 to 9999	**Factory Setting:**	1234
Properties:			

Description:

This parameter defines the Bluetooth parity password. This password is limited to the four digits available on the inverter display. It is recommended that the user change this password.

> **NOTE!**
> Parameter P771 is only available with the Bluetooth accessory connected.

15.2 CAN – CANOPEN / DEVICENET INTERFACE

P684 – Control Word via CANopen/DeviceNet

P685 – Speed Reference via CANopen/DeviceNet

P700 – CAN Protocol

P701 – CAN Address

P702 – CAN Baud Rate

P703 – Bus Off Reset

P705 – CAN Controller Status

P706 – Counter of Received CAN Telegrams

P707 – Counter of Transmitted CAN Telegrams

P708 – Counter of Bus Off Errors

P709 – Counter of Lost CAN Messages

P710 – DeviceNet I/O Instances

P711 – DeviceNet Reading #3

P712 – DeviceNet Reading #4

P713 – DeviceNet Reading #5

P714 – DeviceNet Reading #6

P715 – DeviceNet Writing #3

P716 – DeviceNet Writing #4

P717 – DeviceNet Writing #5

P718 – DeviceNet Writing #6

P719 – DeviceNet Network Status

P720 – DeviceNet Master Status

P721 – CANopen Communication Status

P722 – CANopen Node Status

Description:

Parameters for configuration and operation of the CAN interface. For detailed description, refer to the CANopen communication manual or DeviceNet communication manual supplied in the CD-ROM that comes with the product.

15.3 COMMANDS AND COMMUNICATION STATUS

P681 – Speed at 13 bits

P721 – CANopen Communication Status

P722 – CANopen Node Status

Description:

Parameters used for monitoring and controlling the CFW100 inverter by using the communication interfaces. For detailed description, refer to the communication manual (User) according to the interface used. Those manuals are supplied in electronic format in the CD-ROM that comes with the product.

16 SOFTPLC

16.1 SOFTPLC

The SoftPLC function allows the inverter to assume PLC (Programmable Logical Controller). For further details regarding the programming of those functions in the CFW100, refer to the CFW100 SoftPLC manual. Below are described the parameters related to the SoftPLC.

P900 – SoftPLC Status

Adjustable Range:	0 = No App. 1 = Installing App. 2 = Incompat. App. 3 = App. Stopped 4 = App. Running	**Factory Setting:**	0
Properties:	ro		

Description:

It allows the user to view the status in which the SoftPLC is. If there are no applications installed, the parameters P902 to P959 will not be shown on the HMI.

If this parameter presents option 2 = Incompat. App., it indicates the user's program loaded on the SoftPLC is not compatible with the CFW100 firmware version.

In this case, it is necessary that the user recompile the project on the WLP, considering the new CFW100 version and redo the download. If that is not possible, the upload of this application can be done with the WLP, provided that the application password is known or is not enabled.

P901 – Comando para SoftPLC

Adjustable Range:	0 = Stop Application 1 = Run Application 2 = Delete Application	**Factory Setting:**	0
Properties:	cfg		

Description:

This parameter allows stopping, running or excluding an application installed, but to do so, the motor must be disabled.

P902 – Scan Cycle Time

Adjustable Range:	0 to 9.999 s	**Factory Setting:**	0
Properties:	ro		

Description:

This parameter sets the application scanning time. The larger the application, the longer is the scanning time.

P910 to P959 – SoftPLC Parameters

Adjustable Range:	-9999 to 9999	**Factory Setting:**	0
Properties:			

Description:

These are parameters whose use is defined by the SoftPLC function.

NOTE!
For further information on the use of the SoftPLC function, refer to the CFW100 SoftPLC manual.