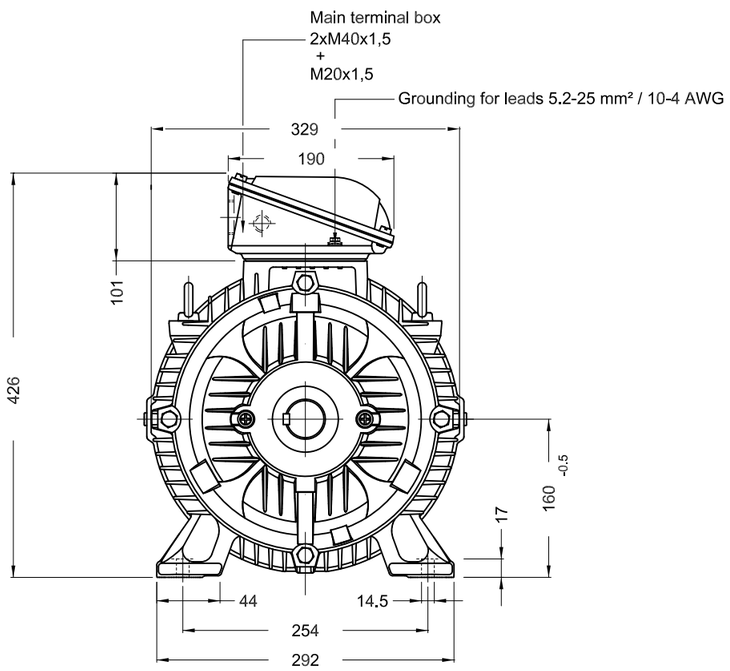

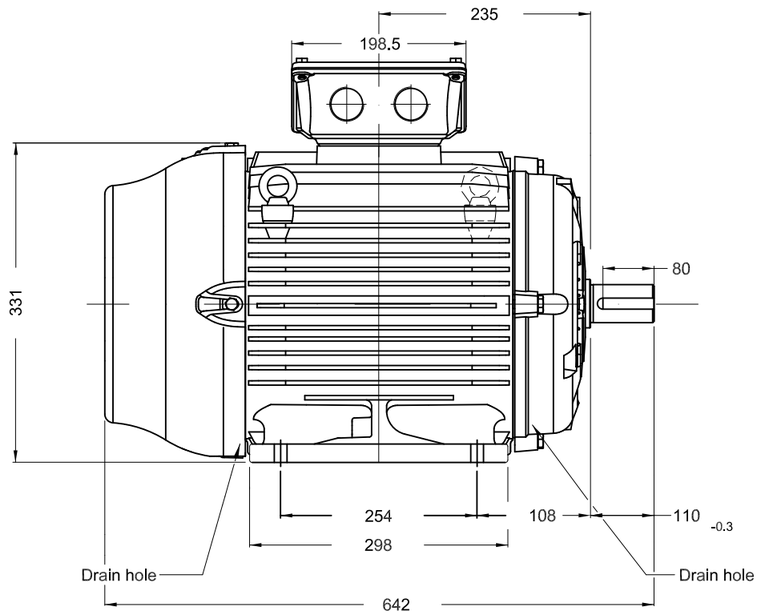

Color RAL 5009

Painting plan 203A

Mounting B3T

DE Shaft End

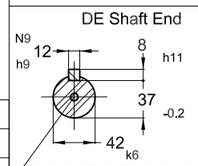

DM16 WEG TBG12 (DS DIN332)

7.5 kW 08 Poles 50 Hz | A

ECM	LOC	SUMMARY OF MODIFICATIONS	EXECUTED	CHECKED	RELEASED	DATE	VER

EXECUTED		THREE PHASE W22 MOTOR - PREMIUM EFF	PREVIEW
CHECKED		FRAME 160L IP55 TEFC	
RELEASED			
REL DT.		WMO Jaragua do Sul Product Engineering	SHEET 1 / 1

Dimensions in mm

XME A3

WEG's property. Forbidden reproduction without previous authorization.