# TECHNICAL DATA

Three Phase Electric Motors - Cast Iron Frame
UM3C 180L-4 IE3
22 kW / 30 Cv
1475 RPM

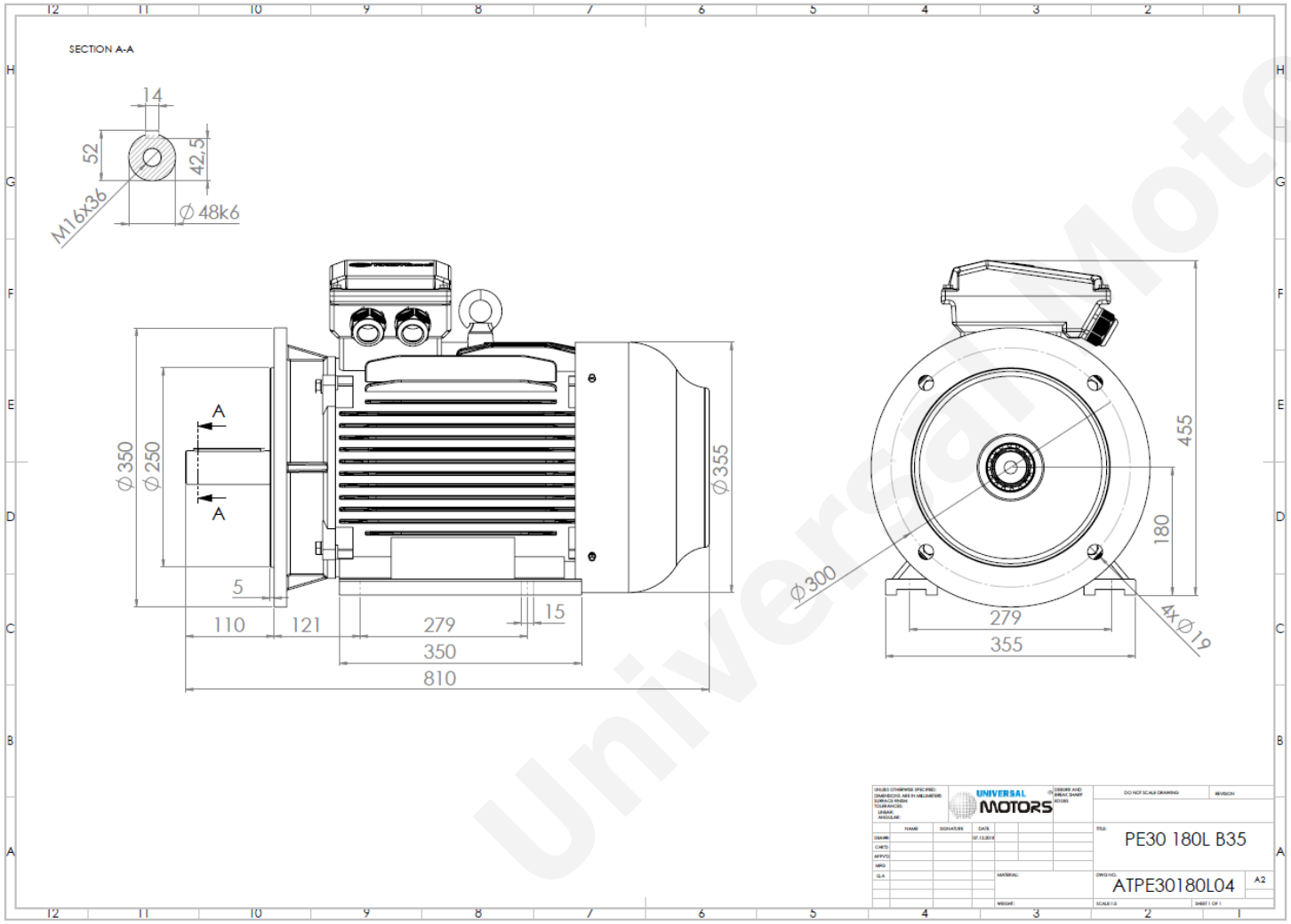


| | |
|---|---|
| Motor type: | **UM3C 180L-4 IE3** |
| Output: | **22 kW / 30 Cv** |
| Speed ($min^{-1}$): | **1475 RPM** |
| Voltage: | **400 V** |
| Frequency: | **50 Hz** |
| Current: | **39.7 A** |
| Power factor (Cos Ø): | **0.86** |
| Poles: | **4** |
| Insulation class: | **F** |
| Temperature rise Class: | **B** |
| Efficiency 50%: | **92.4 %** |
| Efficiency 75%: | **93.3 %** |
| Efficiency 100%: | **93.0 %** |
| Torque: | **142 N.m** |
| Tstarting/Tnominal: | **2.0** |
| Istarting/Inominal: | **7.8** |
| Tmaximum/Tnominal: | **2.3** |
| Noise: | **76 Db(A)** |
| Weight: | **220 Kg** |
| Bearing DE: | **6311 C3** |
| Bearing NDE: | **6311 C3** |

**Regime - S1** **Altitude - 1000m** **Environment Temperature - 40ºC**

* References applied only in the UK

**CONTACTS:**
Universal Motors UK, Ltd
Unit E2, Meltham Mills Industrial Estate, Meltham Mills Road, Meltham, Holmfirth
West Yorkshire HD9 4AR, U.K
Tel: +44(0) 1484 660 222
Fax: +44(0) 1484 660 333
Mail: enquiries@universalmotors-group.co.uk

Universal Motors