TECO A510 Inverter

Quick Start Guide

This guide is to assist you in installing and running the inverter and verify that it is functioning correctly for it's main and basic features.

For detailed information and if there are any doubts please refer to the instruction manual.

Step 1	Supply & Motor connection

1) Ensure that the Inverter & the motor have the correct KW power and voltage ratings.
   Motor full load amps must not exceed the Inverter rating.

2) Ensure that the supply & Motor cables are connected Correctly prior to power up.

3) Connect supply cable to terminals L1,L2& L3.

4) Connect motor cable to terminals T1,T2 &T3.
   (Swap two leads If motor runs in reveres direction).

5) Connect supply Earth and the motor Earth to the drive Earth terminal.

Note:-

I) For detailed installation and wiring refer to the Instruction manual.

Step 2	Apply power to the drive

Apply power to the drive, the display will briefly show the supply voltage 220V followed by **05.0** flashing.

This is the default (factory set) frequency.
If the unit has been used previously then it will show the last frequency programmed.

Step 3	Test run from keypad

Press **RUN** KEY to run.

The frequency will ram up to **5.0** Hz **or** the user **pre-set** frequency and according to the default acceleration ramp time.

Press **STOP** key to stop.
The frequency will ramp down to zero according to the default decel ramp time.

Step 4	To alter frequency from keypad. (Default setting).

Use the Arrow keys ▲ ▼ and < / **RESET** key
to alter the digits to the required frequency.
To store the set frequency use **READ/ENTER** Key
eg. 50.0 HZ then use **RUN** and **STOP** keys to start/ stop.

Remote speed reference and Remote run

Step 1	Remote mode wiring. Speed reference and Run signals.

1) Ensure that you have carried out installation & wiring requirements as per step1 quick start guide on previous page before you proceed.

2) For analogue signal type. -10V to +10V or 0-10V dc. Use the terminal AI1 or AI2. Set SW2 in V position.

   For analogue input type 4 -20mA. Use the terminal AI2. Set SW2 to I Position. (default).

. Connect remote potentiometer OR remote 0-10 vdc signal as required. to terminals AI1 Or AI2.
   Functions of AI1 & AI2 can be set by parameter 04-00 & 04-05.

   Terminal + 12Vdc & -12Vdc is the supply provided for use with the potentiometer.
   Terminals AI1 &AI2 are for potentiometer wiper connection.
   Terminal GND is 0Vdc.

3) Connect remote start switch if required according to diagram in the instruction manual.
   Use terminals +24Vdc & S1 (Forward run).

Step 2	Remote mode Run

1) Power up.
   Display will read the frequency from one of the following according to the Connection made to AI1 or AI2 terminal. Set parameter 00-05 =0001
   a) Remote external potentiometer
   b) Remote 0-10VDC analog signal.

Step 3	Check/ verify and alter parameters

Check / verify and alter parameters for remote start & remote frequency as necessary before you proceed. Parameters 00-02 & 00=05

See quick start parameter list & How to alter parameters.

Step 4	**RUN using remote speed reference.** **(Potentiometer, 0-10vdc or 4-20ma**)

1) **To run.** Activate the remote run switch connected to terminals S1 (FWD) or S2 (REV) as required,. Parameter 00-02=0001

The frequency will ram up to the **frequency** set by one of the Following and according to the set acceleration ramp time.

Select Analogue input 1 or 2 as required to set speed reference.

- External Analogue Input. Parameter 00-05 = 1

AI1	Voltage Input. Speed command	0 to +10V, -10V to +10V
AI2	Multi-function analog input terminal. Use SW2 to switch voltage or current input .	0 to +10V, -10V to +10V 4 to 20 mA

2) **To Stop.** De-activate the remote run switch. The frequency will ramp down to zero and according to decel ramp time.

How to alter Parameters from keypad

1) To alter parameters:- Press the **DISP/FUN** key, until the first parameter 00-00 is displayed.

2) Then use the arrow keys ▲ ▼ to select the parameter required then Press **READ / ENTER** key to read the preset value.

3) Use the ▲ ▼ and < / **RESET** keys to alter the setting of the parameters as per **basic quick start parameter list**.
Note:- For full parameter list refer to the instruction manual.

4) To save each parameter change, press **READ / ENTER** key then the word **END** will be displayed.

5) Use ▲ ▼ key to select the next parameter to alter and follow steps 2 to 4 until all changes are complete.

6) Pressing the DISP/FUN key repeatedly will alternate the display between the **preset frequency** (flashing display) and the last parameter accessed or other selectable displays 0 to 7 when selected by parameter 12-00 according to the table below.

【0】:Disable display **【1】:output Current**
【2】:output Voltage **【3】:DC bus voltage**
【4】:Temperature **【5】:PID feedback**
【6】:AI 1 .Value **【7】:AI2. Value**

Type	Name	Functions
Display	**Main digital displays**	Frequency, parameter, voltage, current, temperature and Fault message.
	LED status display	**FAULT:** When the inverter has a warning or fault message, the indicator lights up. **FWD:** When the inverter is in forward run mode, the indicator lights up. RUN mode: Continuously ON. Stop mode:- Flashes ON/OFF. inverter stopping) **REV:** When the inverter is in revere Run mode, the indicator lights up. RUN mode: Continuously ON. Stop mode:- Flashes ON/OFF **SEQ:** When Run command source is set to external control, the indicator lights up. **REF:** When Frequency command source is set to external control, the indicator lights up.
Keys（8 keys）	**RUN**	**RUN: Run command at the set frequency.**
	STOP	**STOP: Stop command. Decelerate or Coast to stop.**
	▲	Increments parameter number and preset values.
	▼	Decrements parameter number and preset values.
	FWD/REV	Sets Inverter speed and motor rotation direction.
	DSP/FUN	Select between **Frequency, Function** (parameters) and **Monitor displays** according to the following sequence. Frequency screen →Function selection→Monitor parameters→ Frequency screen.
	</RESET	**"<" is** left shift key. It is used for changing parameter or value. RESET key：Use to reset Inverter resettable faults .
	READ/ENTER	Used to display the preset value of parameters and for saving the changed parameter values.

Basic Quick Start Parameter List

Parameter	Default	Range	Note
00-00	0	0-4	**Control Mode:-** 0: V/F 1: V/F+PG (Encoder). 2: SLV (Sensorless Vector) 3: SV (Vector +Encoder) 4: PMSV (Permanent Magnet Motor + Encoder)
00-27	0	0-1	**HD/ND selection** 0: HD (Heavy duty load mode) 1: ND (Normal duty load mode)
00-02	00-00	0-2	**Run mode:-** Keypad = 0 Remote = 1 Communication = 2 PLC = 3
00=05	00-00	0-5	**Frequency source:-** 00-00 = keypad 00-01= Remote control (Analogue Inputs) 00-02= External up/down frequency control 00-03= Control by Communication 00-04 = Pulse Input 00-05 =PID output
00-01	000	0-1	**Run Direction:-** 0: Forward 1: Reverse
00-12	50/60Hz	0.1~109%	Max frequency limit. (default 100%)
00-13	0.0	0.0~109%	Min frequency limit. (default 0.0%)
07-09	000	0-1	**Stop method:** 00-00 = Decel to stop 00-01= Coast to stop 00-02= DC injection braking 00-03= Run signal inhibit (timer) during Coast to stop
02-01	**A	**A	Motor overload protection
13-08	000		**Factory Reset: Inverter Supply voltage.** 2 : 2 wire initialization(230/460V) 3 : 3 wire initialization(230/460V) 4 : 2 wire initialization(200/415V) 5 : 3 wire initialization(200/415V) 6 : 2 wire initialization(200/380V) 7 : 2 wire initialization(200/380V)

Note:- For Full Parameter List see the Instruction manual

Control Modes & Auto Tune

A510 provides five control modes
Select the relevant control mode for the application.
Default control mode is V/f.

V/f can be used for most applications specifically multi-motor
or applications where auto tune is not successful
or when a customized v/f pattern may be required.

Several V/f patterns are available selectable by parameter 01-00.
select the appropriate one based on the application load type and the motor base frequency of 50 or 60 Hz.

For selections of the V/f patterns . Refer to the instruction manual.

For Vector modes SLV & SV modes are used for obtaining best performance
from a motor and in applications that require dynamic response to torque and speed change use SV + Encoder.

V/f Mode Parameters:-

Parameter	Default	Range	Note
01-00	F	0-FF	F= General Purpose. 60 Hz. system 0= General Purpose . 50Hz. System For full list of preset patterns set by 01-00,refer to the manual. FF= Customized V/f. Set parameters 01-02 to 01-13.

For Motor1 parameters in V/f mode, set the name plate data in parameters 02-00 to 02-19
Parameters 02-09 to 02-19. Not normally need to be adjusted.

Note:- Two independent set of parameters can be set. Motor 1 & Mmotor2.
Parameters 02-20 to 02-26. (Motor 2 can only function in V/f mode).

SLV & SV mode set parameters in parameter Group 17.

Enable auto tune function by parameter 17-10.

Three auto tune modes are available. Rotational/ Static & Resistance.

- Use rotational where possible. Motor rotates the process takes about 90 secs
- Use Static when rotation of load is not possible. It takes about 35 secs.
- Use line to Line resistance for long cable (above 50 meters in V/f mode)

Group 17 Automatic Tuning Function Group				
Code	Parameter Name	Range	Default	Unit
17-00	Mode selection of automatic tuning	0: rotation autotune 1: static autotune 2: stator resistance measurement	0	-
17-01	Motor rated output power	0.00~600.00	-	KW
17-02	Motor rated current	0.1~999.9	-	A
17-03	Motor rated voltage	200V: 0.0~255.0 400V:0.0~510.0	220 440	V
17-04	Motor rated frequency	10.0~400.0 10.0~1200.0 (when 00-31 = 1)	60.0	Hz
17-05	Motor rated speed	0~24000	1750	rpm
17-06	Pole number of motor	2,4,6,8	4	Pole
17-07	Number of PG pulse	0~60000	1024	ppr
17-08	Motor no-load voltage	200V: 50~240 400V100~480	-	V
17-09	motor excitation current	0.01~600.00	-	A
17-10	Automatic tuning start	0: Disabled 1: Enabled	0	-
17-11	Auto tune Error History	0: No error 1: Motor data error 2: stator resistance tuning error 3:leakage induction tuning error 4: Rotor resistance tuning error 5: mutual induction tuning error 6: encoder error 7: DT Error 8: Motor's acceleration error 9: Warning	0	-

Wiring Diagram

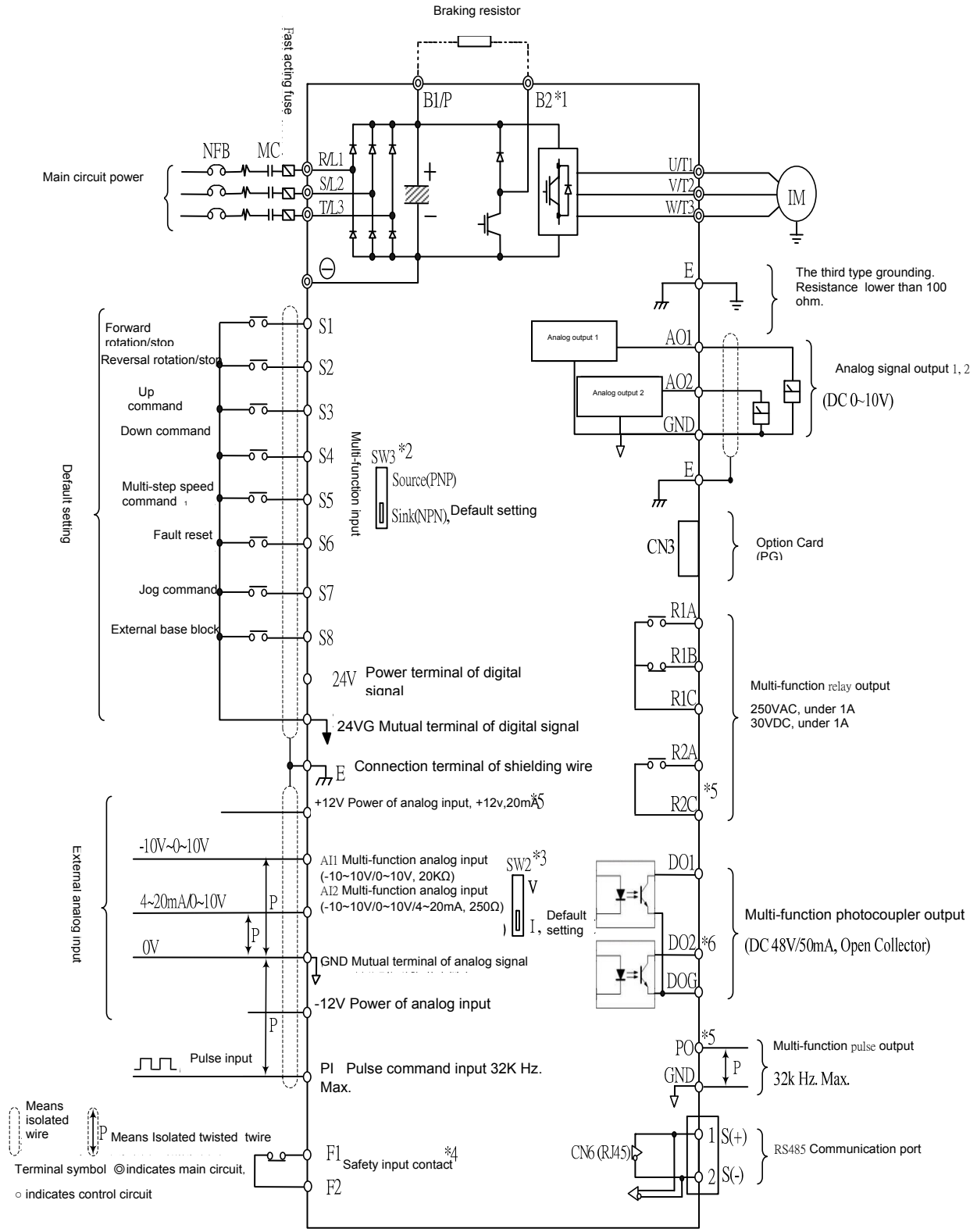

Remark:

*1: Only the master circuit of 220V1~25HP and 440 V1~30HP (included) or models of lower capacity with built-in braking resistor provide terminal B2. The braking resistor can be connected directly between B1 and B2.

*2: The multi-function digital input terminals S1~S8 can be set to Source (PNP) or Sink (NPN) mode through the SW3.

*3: Multi-function analog input 2 (AI2) can be set to the voltage command input (0-10/-10-10v) or the current command input (4~20mA) through the SW3.

*4: Safety input connector F1 and F2 should be shorted so that the inverter outputs properly. When the safety input is used, please be sure to remove the short-pin between F1 and F2.

*5: Only 220 V 3HP and 440 v 5HP (included) or models above, provide terminals -12V, R2A-R2C and PO- GND.

*6. Only 220 V 2HP and 440 v 3HP (included) or models below, provide terminal DO2.

PG (Encoder) feed back set up.

Control modes SV & V/f + Encoder(PG).

Parameter Group 20

Code	Parameter Name	Range	Default	Unit
20-19	Over speed (OS) selection	0: Deceleration to stop 1: Coast to stop 2: Continue to operate	1	
20-20	Over speed (OS) detection level	0~120	115	%
20-21	Over speed (OS) detection time	0.0~2.0	0.5	Sec
20-22	Speed deviation (DEV) stop function.	0: Decelerate to stop 1: Coast to stop 2: Continue to operate	2	
20-23	Speed deviation (DEV) detection level	0~50	10	%
20-24	Speed deviation (DEV) detection time	0.0~10.0	0.5	Sec
20-25	PG (Encoder) Signal loss function.	0: Decelerate to stop 1: Coast to stop 2: Continue to operate	1	-
20-26	PG (encoder) signal loss detection time.	0.0~10.0	2.0	Sec
20-27	PG pulse number	0~60000	1024	ppr
20-28	Selection of PG rotation direction	0: Forward counter –clockwise rotation 1: Forward Clockwise rotation	0	-
20-29	PG pulse scaling	001~132. Example: Using the formula below:- XYZ = 001. X=0,Y=0,Z=1 PG card's dividing ratio will be (X+1)/YZ= (0+1)/0x1=1	1	-
20-30	PG gear ratio 1	1~1000	1	-
20-31	PG gear ratio 2	1~1000	1	-

Using PG Interface. Encoder Option Boards

(1) PGO. Open Collector type : Single A/B phase pulse input, compatible with open-collector or complementary encoder feedback, the maximum response frequency is 100KHz.

(2) PGL. Line Driver type : Single A/B phase pulse input, compatible with line-driver encode feedback, the maximum response frequency is 300 KHz.

PG Feedback Set-Up

1. Overspeed Operation Setting (20-19 to 20-21)

- An error is detected when the number of motor rotations exceeds the regulated limit.
- If an overspeed (OS) fault is detected for more than the time set in 20-21 (overspeed detection delay time) and if the motor speed feedback exceeds the set value in parameter 20-20 (overspeed detection level) then, the inverter stops according to the setting in parameter 20-19.

Refer to Fig. 4.3.117, the PG Feedback Fault Detection Block Diagram.

2. PG Speed Deviation Setting (20-22 to 20-24)

- An error is detected when the speed deviation (i.e. the difference between the preset speed and the actual motor speed) exceeds the regulated limit.
- if the speed deviation is detected for more than the time set in parameter 20-24(deviation detection delay time) and it is greater than the set value in 20-23 (deviation detection level) then, the inverter stops according to the setting in 20-22.

Refer to Fig. 4.3.117, the PG Feedback Fault Detection Block Diagram.

3. PG Open Detection Setting (20-25 to 20-26)

- A PG open (PGO) fault is detected if the PG disconnection time exceeds the set value in 20-26 (PG open detection time).
- After a PG open is detected, the inverter stops according to the setting in 20-25.

Refer to Fig 4.3.117, the PG Feedback Fault Detection Block Diagram.

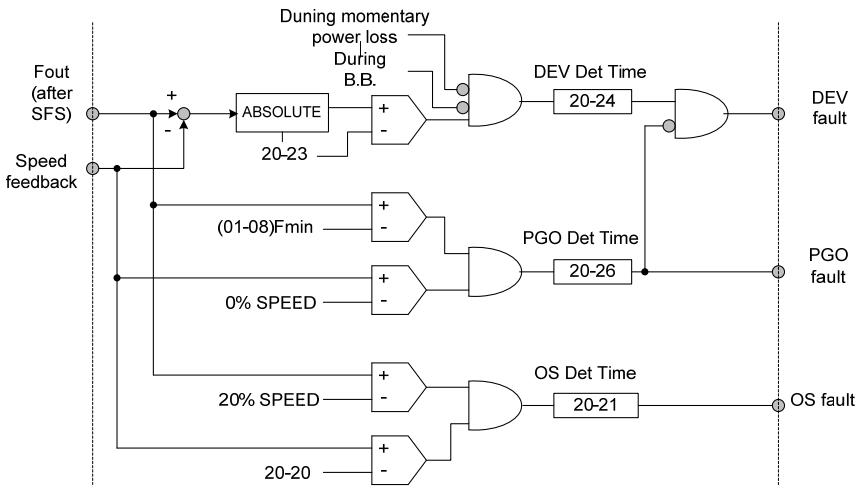

Figure 4.3.117 The block figure of PG feedback failure detection

4. Setting Number of PG Pulse (20-27)

Set the PG (pulse generator or encode) constant in pulses/revolution.

Set the number of phase-A or phase-B pulses per motor revolution in 20-27.

If there is a transmission between the motor and PG, set the gear ratio in parameters 20-30 and 20-31.

5. PG Rotation Direction (20-28)

To coordinate the PG rotation direction with the motor rotation direction

Set whether phase-A or phase-B leads when the motor operates in the forward direction

20-28=0 : Phase A leads with forward run command.
(phase B leads with reverse run command)

20-28=1 : Phase B leads with forward run command.
(phase A leads with reverse run command)

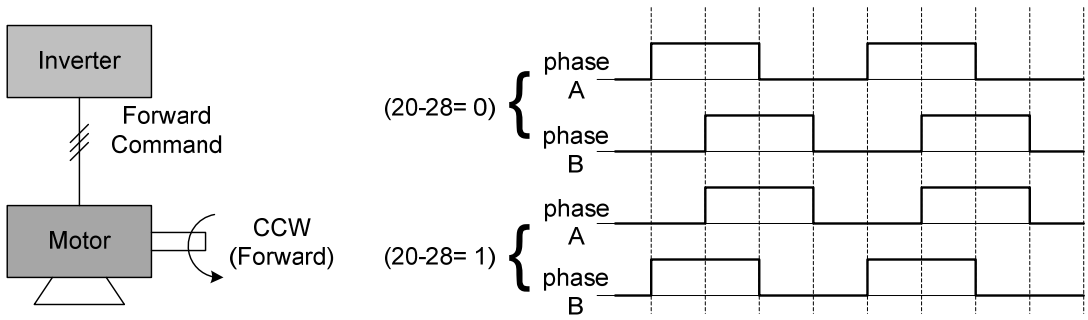

Figure 4.3.118 PG and motor rotation direction signal

The direction of motor is determined as follows:

Forward: The motor output shaft rotates in the C.C.W(counter clockwise) direction with a inverter forward run command. As the following figure shown.

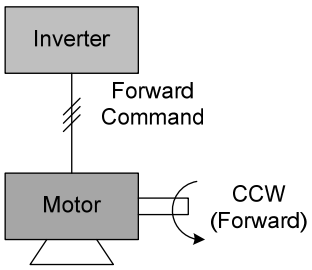

Figure 4.3.119 Motor operation direction

Reverse: The motor output shaft rotate in the C.W (clockwise) direction with a inverter reverse run command.

The phase leading in a typical PG is determined as follows:

Phase A leads when the input axis of PG rotates C.W(clockwise). As the following figure shown.

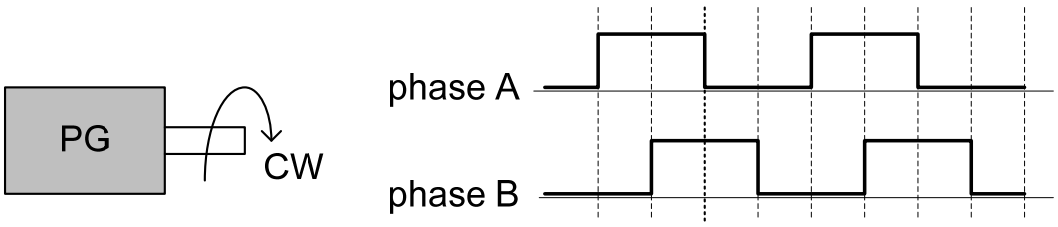

Figure 4.3.120 PG operation direction

6. PG Pulse Monitor Output (PO1).

Reduction Ratio. parameter (20-29)

Terminal PO1 can be used to output the Encoder pulses obtained by the (PG) encoder board.

Set parameter 03-35 (Multi-function selections for Pulse Output 1) to 7.

Set the pulse output reduction ratio for Encoder pulses in parameter 20-29

Parameter 03-36 (pulse output scale) is not relevant for this selection and it is ignored.

Pulse output scaling can be done by using the formaul as follows:-

20-29 = □ □□□

n k

Setting ranges n : 0 to 1

k : 001 to 32

Output Ratio = (1+n)/k. The possible output ratio settings are as follows : 1/32 ~ 1

e.g. 20-29=001 → n=0, k=1, proportion = (1+0)/1=1

①. 20-29=032 → n=0, k=32, proportion = (1+0)/32=1/32
②. 20-29=132 → n=1, k=32, proportion = (1+1)/32=1/16

Sets the PG output ratio(20-29) to keep the PG pulse output from terminal PO1 is less than 300KHz (i.e. PG input pulse × PG pulse output ratio ≤ 300KHz).

7. Setting the Gear Ratio for scaling encoder input and motorspeed.

Set parameters (20-30 , 20-31).

In V/f + PG control mode, the motor can be operated even if there are transmission between the motor and PG.

The speed responsiveness of V/f + PG mode is lower than SV mode.

Set the gear ratio 2. On load side (PG side) using 20-31.

Set the gear ratio1. Motor side using 20-30.

The motor speed will be calculated within the inverter using the following equation:

$$\text{Motor Speed(RPM)} = \frac{\text{No. of input pulses from PG} \times 60}{\text{PG pulses (20-27)}} \times \frac{\text{No. of PG gear teeth 2 (20-31)}}{\text{No. of PG gear teeth 1 (20-30)}}$$