User Guide

UD51

Second encoder small option module for Unidrive

Part Number: 0460-0038
Issue Number: 3

General Information

The manufacturer accepts no liability for any consequences resulting from inappropriate, negligent or incorrect installation or adjustment of the operating parameters of the equipment or from mismatching the Drive with the motor.

This option module is intended for use only with Control Techniques Unidrive products. Any other use invalidates the warranty and may cause a safety hazard.

The contents of this Guide are believed to be correct at the time of printing. In the interests of a commitment to a policy of continuous development and improvement, the manufacturer reserves the right to change the specification of the product or its performance, or the contents of this Guide, without notice.

All rights reserved. No part of this Guide may be reproduced or transmitted in any form or by any means, electrical or mechanical including photocopying, recording or by any information storage or retrieval system, without permission in writing from the publisher.

Use within the European Union, etc

The following information applies where the end use of the Drive is within the European Union, the European Economic Area, or other regions which have implemented Directives of the European Council or equivalent measures.

The Drive, together with its associated option modules, complies with the Low Voltage Directive 73/23/EEC.

The installer is responsible for ensuring that the equipment into which the Drive is incorporated complies with all relevant Directives.

The complete equipment must comply with the EMC Directive 89/336/EEC.

If the Drive is incorporated into a machine, the manufacturer is responsible for ensuring that the machine complies with the Machinery Directive 89/392/EEC. In particular, the electrical equipment should generally comply with European Harmonised standard EN60204-1

Copyright © July 1999 Control Techniques Drives Ltd
Author: RFD
Issue Code: 51nu3
Issue Date: July 1999

Contents

Chapter

1 Introduction 1
1.1 Main features of the UD51 1
2 Safety Information 2
3 Installing the UD51 5
4 Making Connections 7
4.1 Locations of the terminals 7
4.2 Functions of the terminals 8
5 Setting Up the UD51 10
5.1 Example configurations 10
5.2 Encoder shaft position 11
5.3 Encoder outputs (terminals 49, 50, 52, 53) 11
5.4 Z marker-pulse outputs (terminals 54, 55) 12
5.5 Freeze inputs (terminals 54, 55) 13
6 Related Parameters 15
6.1 Introduction 15
6.2 Programmable software 15
6.3 Parameter descriptions 17

Appendix

A Specifications A-1
A.1 Inputs (terminals 40, 41, 43, 44, 46, 47) A-1
A.2 Outputs and combined inputs/outputs (terminals 49, 50, 52, 53, 54, 55) A-1
A3 Temperature ratings A-1
B Diagnostics B-1
B.1 Trip codes B-1

1 Introduction

1.1 Main features of the UD51

Applications

The UD51 Second encoder *small option module* has inputs that allow a second encoder to be connected to a Unidrive. The module also has simulated-encoder outputs.

The UD51 operates with standard quadrature encoders having up to 16384 lines per revolution, allowing a maximum operating frequency of 210 kHz, or from *frequency and direction* (F/D) signals up to 420kHz.

When used in a Drive operating In either the Closed-loop Vector or Closed-loop Servo operating mode, the UD51 can perform the following:

- Give speed and position feedback for position control or digital lock
- Accept *frequency and direction* reference input signals

Simulated encoder outputs

The UD51 has simulated encoder outputs which normally use the second encoder as the source, but can be reconfigured to use the main encoder (Encoder 1) connected to the 15-way D-type on the Drive as the source. These outputs produce *quadrature AB* signals corresponding to the line counts from the source encoder. Also, these outputs can be configrured for frequency and direction signals.

Installation

The UD51 must be fitted in the *small option module* bay of the Unidrive.

All connections to the Drive are made by a multi-way connector. Connections from external equipment are made by a plug-in 16-way screw-terminal block on the UD51.

2 Safety Information

2.1 Warnings, Cautions and Notes

A **Warning** contains information which is essential for avoiding a safety hazard.

A **Caution** contains information which is necessary for avoiding a risk of damage to the product or other equipment.

A **Note** contains information which helps to ensure correct operation of the product.

2.2 Electrical safety – general warning

The voltages used in the Drive can cause severe electric shock and/or burns, and could be lethal. Extreme care is necessary at all times when working with or adjacent to the Drive.

Specific warnings are given at the relevant places in this User Guide.

The installation must comply with all relevant safety legislation in the country of use.

The Drive contains capacitors that remain charged to a potentially lethal voltage after the AC supply has been disconnected. If the Drive has been energized, the AC supply must be isolated at least ten minutes before work may continue.

2.3 System design

The Drive is intended as a component for professional incorporation into complete equipment or systems. If installed incorrectly the Drive may present a safety hazard. The Drive uses high voltages and currents, carries a high level of stored electrical energy, and is used to control mechanical equipment which can cause injury.

Close attention is required to the electrical installation and the system-design to avoid hazards either in normal operation or in the event of equipment malfunction. System-design, installation, commissioning and maintenance must be carried out by personnel who have the necessary training and experience. They must read this safety information and this User Guide carefully.

To ensure mechanical safety, additional safety devices such as electro-mechanical interlocks may be required. The Drive must not be used in a safety-critical application without additional high-integrity protection against hazards arising from a malfunction.

2.4 Environmental limits

Instructions in the *Unidrive Installation Guide* regarding transport, storage, installation and use of Drives must be complied with, including the specified environmental limits. Drives must not be subjected to excessive physical force.

2.5 Compliance with regulations

The installer is responsible for complying with all relevant regulations, such as national wiring regulations, accident prevention regulations and electromagnetic compatibility (EMC) regulations. Particular attention must be given to the cross-sectional areas of conductors, the selection of fuses or other protection, and protective earth (ground) connections.

The *Unidrive Installation Guide* contains instructions for achieving compliance with specific EMC standards.

Within the European Union, all machinery in which this product is used must comply with the following directives:

89/392/EEC: Safety of Machinery

89/336/EEC: Electromagnetic Compatibility

2.6 Safety of personnel

The STOP function of the Drive does not remove dangerous voltages from the output of the Drive or from any external option unit.

The Stop and Start controls or electrical inputs of the Drive must not be relied upon to ensure safety of personnel. If a safety hazard could exist from unexpected starting of the Drive, an interlock that electrically isolates the Drive from the AC supply must be installed to prevent the motor being inadvertently started.

Careful consideration must be given to the functions of the Drive which might result in a hazard, either through their intended functions (eg. Auto-start) or through incorrect operation due to a fault or trip (eg. stop/start, forward/reverse, maximum speed).

Under certain conditions, the Drive can suddenly discontinue control of the motor. If the load on the motor could cause the motor speed to be increased (eg. hoists and cranes), a separate method of braking and stopping the motor must be used (eg. a mechanical brake).

Before connecting the AC supply to the Drive, it is important that you understand the operating controls and their operation. If in doubt, do not adjust the Drive. Damage may occur, or lives put at risk. Carefully follow the instructions in this User Guide.

Before making adjustments to the Drive, ensure all personnel in the area are warned. Make notes of all adjustments that are made.

2.7 Risk analysis

In any application where a malfunction of the Drive could lead to damage, loss of life or injury, a risk analysis must be carried out, and where necessary, further measures taken to reduce the risk. This would normally be an appropriate form of independent safety back-up system using simple electro-mechanical components.

2.8 Signal connections

The control circuits are isolated from the power circuits in the Drive by basic insulation only, as specified in IEC664–1. The installer must ensure that the external control circuits are insulated from human contact by at least one layer of insulation rated for use at the AC supply voltage.

If the control circuits are to be connected to other circuits classified as Safety Extra Low Voltage (SELV) (eg. to a personal computer), an additional isolating barrier must be included in order to maintain the SELV classification.

2.9 Adjusting parameters

Some parameters have a profound effect on the operation of the Drive. They must not be altered without careful consideration of the impact on the controlled system. Measures must be taken to prevent unwanted changes due to error or tampering.

3 Installing the UD51

Warning

Before using the following procedure, refer to the Warnings at the beginning of Chapter 2 *Installing the Drive* in the *Unidrive Installation Guide*.

1. Before installing the UD51 in the Unidrive, ensure the AC supply has been disconnected from the Drive for at least 10 minutes.
2. Check that the exterior of the UD51 is not damaged, and that the multi-way connector is free from dirt and debris. Do not install a damaged or dirty UD51 in the Drive.
3. Remove the terminal cover from the Drive (for removal instructions, see *Installing the Drive and RFI filter* in Chapter 2 of the *Unidrive Installation Guide*).
4. Position the multi-way connector on the rear of the UD51 over the connector in the Drive (see Figure 1), and press on the thumb pad to push the UD51 into place.
5. Re-fit the terminal cover to the Drive.
6. Connect the AC supply to the Drive.
7. Set parameter **.00** at **149** to unlock security.
8. Check that parameter **16.01** is set at **2** to indicate that the module is fitted.
9. If the check in step 8 fails, perform the following:
   - Remove the AC supply from the Drive.
   - Wait at least 10 minutes.
   - Remove the terminal cover.
   - Check that the UD51 is fully inserted.
   - Replace the terminal cover.
   - Re-apply the AC supply.
   - Check again that parameter **16.01** is set at **2**.

Figure 1 ***Installing the UD51 in the Unidrive***

4 Making Connections

Warning

The control circuits are isolated from the power circuits in the Drive by basic insulation only, as specified in IEC664–1. The installer must ensure that the external control circuits are insulated from human contact by at least one layer of insulation rated for use at the AC supply voltage.

If the control circuits are to be connected to other circuits classified as Safety Extra Low Voltage (SELV) (eg. to a personal computer), an additional isolating barrier must be included in order to maintain the SELV classification.

4.1 Locations of the terminals

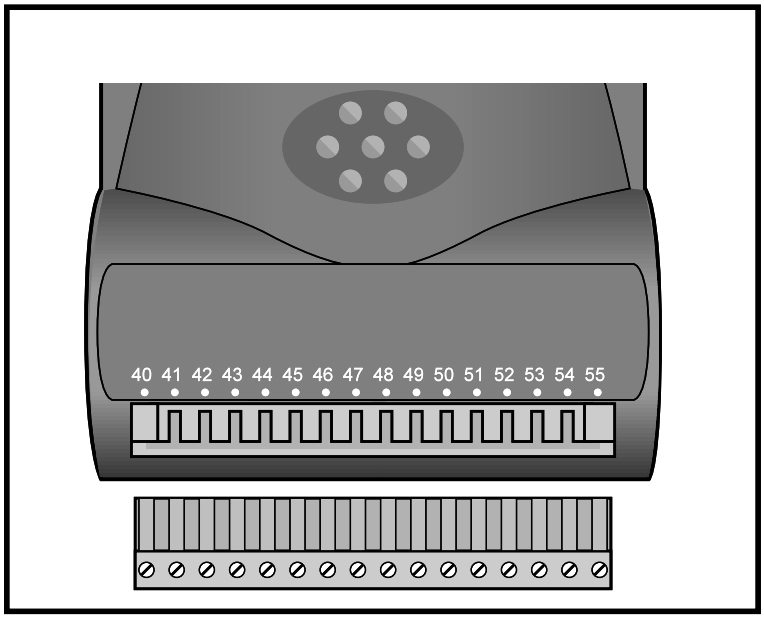

Figure 2 ***Location of the connector on the UD51***

4.2 Functions of the terminals

All the I/O conforms to RS EIA485.

Terminal	Function
40	Quadrature channel A input (default) or F (frequency) input
41	Quadrature channel A\ input (default) or F\ (frequency\) input
42	0V
43	Quadrature channel B input (default) or D (direction) input
44	Quadrature channel B\ input (default) or D\ (direction\) input
45	0V
46	Marker pulse Z input
47	Marker pulse Z \ input
48	0V
49	Quadrature channel A output (default) or F (frequency) output
50	Quadrature channel A\ output (default) or F\ (frequency\) output
51	0V
52	Quadrature channel B output (default) or D (direction) output
53	Quadrature channel B\ output or D\ (direction\) output
54	Marker channel Z output (default) or Freeze input (see Note below)
55	Marker channel Z\ output (default) or Freeze\ input (see Note below)

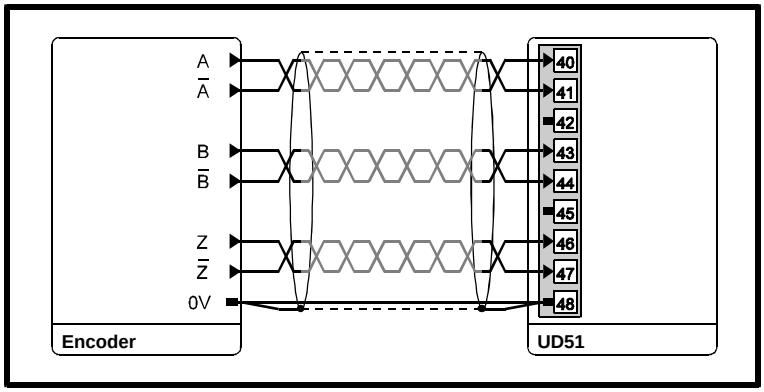

Figure 3 ***Encoder connections to the UD51***

Caution

The encoder must be powered by an external DC supply. Ensure that the supply to be used is suitable for the encoder.

Notes

The UD51 can be used with an encoder that does not produce Z marker pulses. In this case, ensure that the Z marker pulse inputs are left unconnected.

The Freeze input can be used only when the Z output is not used and is available only with the following versions:

UD51 version 3 onward

Drive software version 3 onward

5 Setting Up the UD51

5.1 Example configurations

For both configurations, ensure the following:

The correct value is entered in parameter **16.04** *No. of lines per revolution.*

16.05 *F/D input enable* is set as appropriate.

Position control and digital lock

Main feedback: Quadrature encoder connected to the 15-way D-type connector in the Drive

Reference signal: Connected to the UD51

The UD51 is used to supply a reference signal to the Drive. This reference is applied to Menu 13 *Position Control.*

Signal format can be either quadrature AB or frequency and direction (F/D).

Refer to Menus 3, 13, 16

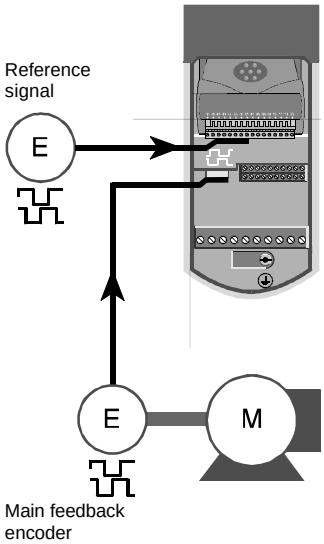

Output speed-reference

Reference output: From the UD51 to another Drive or a controller

Main feedback: Quadrature encoder connected to the 15-way D-type connector in the Drive

The UD51 can be used to supply a speed reference signal to another Drive or to a controller

Signal format can be either quadrature AB or frequency and direction (F/D).

Refer to Menus 3, 16

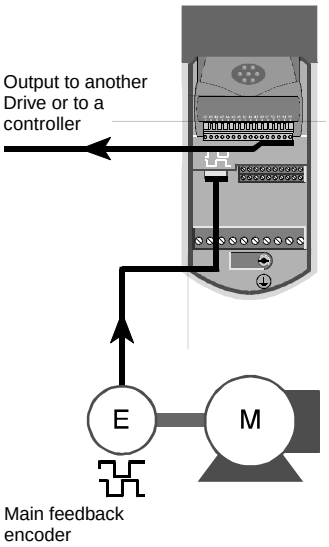

5.2 Encoder shaft position

The UD51 monitors the change in position of the encoder shaft by detecting the states of the quadrature A and B signals. Zero position is detected from the appropriate edge of the Z marker pulse, as follows:

Direction	Edge of the Z marker pulse
Forward	Rising
Reverse	Falling

5.3 Encoder outputs (terminals 49, 50, 52, 53)

The signal source and signal mode of these outputs can be selected as follows:

Signal source

Main or second encoder (see parameter **16.06** *Encoder 1 select*)

Signal mode

Quadrature AB signals or *frequency and direction* signals (see parameter **16.08** *F/D output enable*)

Scaling

To change the number of pulses per revolution for the output signals, see parameter **16.07** *Encoder output scaling*

5.4 Z marker-pulse outputs (terminals 54, 55)

The simulated-encoder Z marker-pulse outputs are a buffered version of the Z marker-pulse inputs from the *main* encoder (Encoder 1) or the *second* encoder input.

The Z marker-pulse outputs are by default synchronized to the quadrant where the quadrature A and B signals are both low. When synchronization is disabled, the Z marker pulse can be present in any of the four quadrants, as follows:

A and B both low
A and B both high
A low and B high
A high and B low

Drive software version V03.xx.07 onward
UD51 version 4 onward
(both present)

Synchronization of the Z marker-pulse output can be disabled by setting parameter **16.12** *Simulated-encoder output marker-pulse synchronization disable* at 1. Synchronization is automatically disabled when parameter **16.07** *Simulated-encoder output scaling* is set at either of the following:

- At a value that would cause the resolution of the encoder-simulation outputs **not** to be an **integral number** of lines per revolution (LPR)
- At such a high value that the number of lines per revolution (LPR) of the simulated-encoder outputs is **less than 1**

Parameter **16.13** *Simulated-encoder Z marker-pulse outputs synchronization inactive indicator* indicates the state of synchronization.

See the following logic table.

16.07	16.12	Synchronization	16.13
Set for integral number of LPR	0	Enabled	0
	1	Disabled	1
Set for no integral number of LPR Set for less than 1 LPR	0	Disabled	1
	1	Disabled	1

Drive software V03.xx.05 or earlier
UD51 version 3 or earlier
(either or both present)

The Z marker-pulse outputs are sychronized to the simulated-encoder quadrature AB outputs only when the resolution of the AB outputs is equal to or greater than 1 LPR.

Drive software V03.xx.04 or earlier

Z marker-pulse sychronization cannot be disabled.

5.5 Freeze inputs (terminals 54, 55)

Note

The Freeze inputs are available only under the following conditions:

UD51 version 3 onward is fitted

Drive software V03.00.00 onward is present

UD70 Intelligent applications *large option module* (V2.06.00 or later) is fitted in the Drive

Z marker-pulse outputs are not required

To use terminals 54 and 55 as Freeze inputs, set **16.10** at 1. When a positive (differential) transition is applied, the position information of both the main encoder and the second encoder inputs is stored after a short delay. A similar delay will occur for both encoders.

The Freeze inputs are terminated by 120Ω ±5% (see **16.11** *Second encoder – Freeze input termination disable*).

Related UD70 parameters

_Q20%.5	Control word (bit 5)

Set at 1 for the current absolute positions of the feedback and reference encoders to be entered in **_Q21%** and **_Q22%** when the *Freeze* input is activated.

_Q20%.5 is reset to zero when the values have been entered.

_Q21%	Feedback-encoder freeze value		
Units	Encoder lines		
Range	-2^{31} to 2^{31}		
Reset	H = S/V	S = N/A	P = N/A

_Q22%	Reference-encoder freeze value		
Units	Encoder lines		
Range	-2^{31} to 2^{31}		
Reset	H = S/V	S = N/A	P = N/A

Delay times

Function	Delay time
Delay from input to output (main or second encoder) when operating in quadrature AB	1.5µs
Delay from Z input to Z output (main or second encoder)	1.5µs
Delay from Freeze input signal to storing of the position information	2µs
Difference in delay between storing the position information from the main encoder and the position information from the second encoder	250ns

6 Related Parameters

6.1 Introduction

The parameters listed in this chapter are used for programming and monitoring the UD51 when it is fitted in a Drive. Refer to the *Unidrive User Guide* for programming instructions.

Warning

Before attempting to adjust any parameters, refer to the Warnings and Notes at the beginning of Chapter 3 *Setting up the Drive* in the *Unidrive User Guide*.

6.2 Programmable software

Key

Type of parameter

◇	RO	Read-only
▭	RW	Read–write
...*select*	Select from two settings	
...*enable*	Make or allow a function to operate	

Limitations of use

P	Protected parameter; the parameter cannot be used as the destination parameter for a programmable input.

Range

Bi	Variable parameter having bipolar value range.
Uni	Variable parameter having unipolar value range.
Bit	Bit parameter

Symbols

⇨	Default value
⇳	Range of values
~	Indicates a range of values (in the case of bit parameters, ~ indicates *or*).

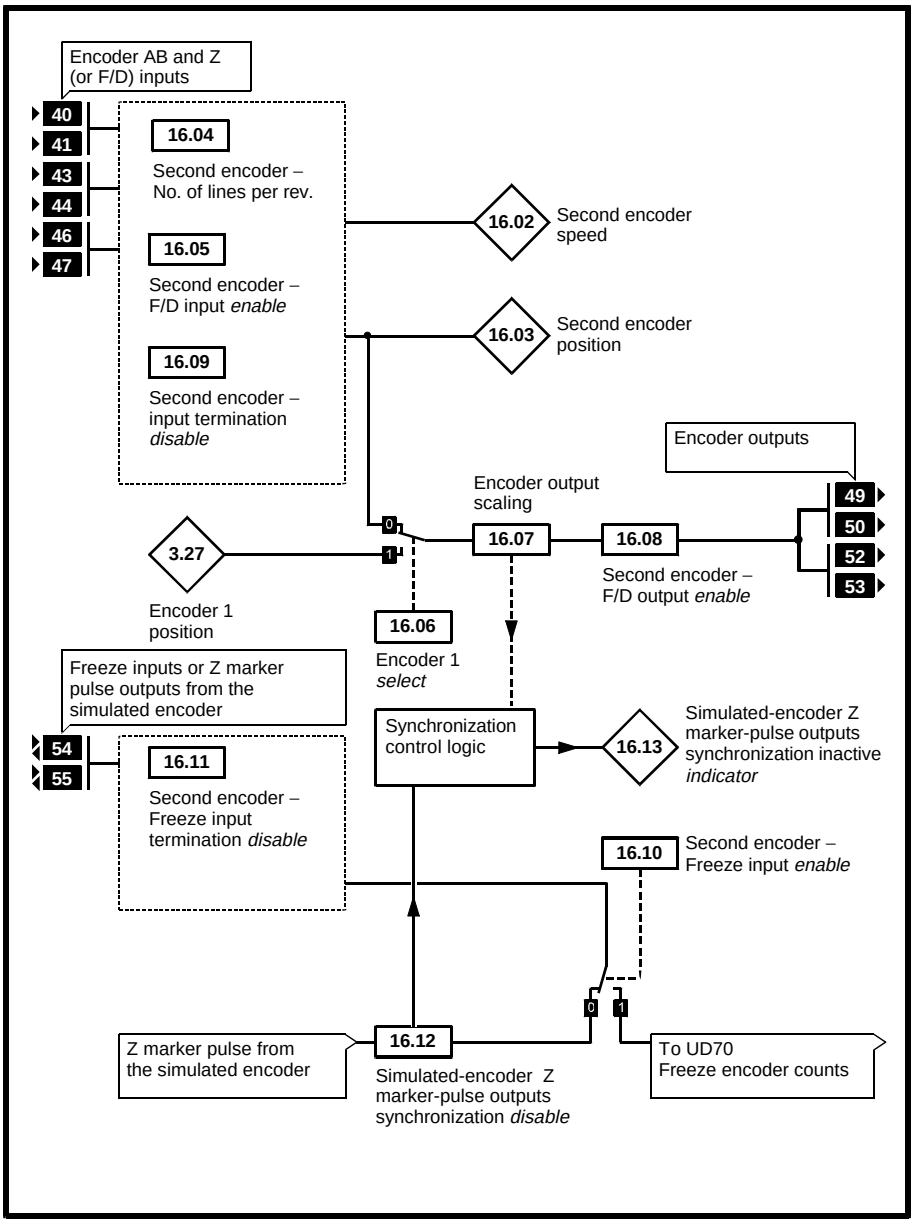

Figure 4 Logic diagram for the UD51

6.3 Parameter descriptions

16.01 *Option module fitted* code

⇕	0 ~ 100	⇨			RO	Uni			P

16.01 indicates the type of small option module that is fitted in the Drive, as follows:

0 No small option module
1 UD50 Additional I/O
2 UD51 Second encoder interface
3 UD53 Resolver interface
4 UD52 SIN-COS encoder interface

16.02 Second-encoder speed

⇕	±30 000	⇨			RO	Bi			P

For **16.02** to correctly indicate the speed of the second encoder, the correct value must be entered in **16.04** *Second encoder – No. of lines per revolution*. **16.05** *Second encoder – F/D input enable* must be set at 0.

16.03 Second-encoder position

⇕	0 ~ 16384	⇨		Rev/16384	RO	Uni			P

16.03 indicates the encoder shaft position counted from the point when the Drive was last powered-up. If Z marker pulses have been detected, the position is indicated relative to the marker pulse. For **16.03** to indicate correctly, the correct value must be entered in **16.04** *Second encoder – No. of lines per revolution*

16.04 Second encoder – No. of lines per revolution

⇕	0 ~ 10 000	⇨	1024	Lines/rev	RW	Uni			

Enter the number of lines per revolution of the encoder that is connected to the UD51. It is essential that the correct value is entered to ensure that **16.02** *Second encoder speed* and **16.03** *Second encoder position* indicate correctly. The values of these parameters are used in Menu 13 for position control and for counting revolutions.

(For Drive software versions V03.xx.05 and earlier, the range of this parameter was 0 ~ 8192.)

16.05 Second encoder – F/D input *enable*

⇕	0 ~ 1	⇨	0		RW	Bit			

Set as follows to select the required input mode for terminals 40, 41, 43, 44:

16.05	Input mode
0 (default)	Quadrature AB
1	Frequency and direction

16.06 Simulated-encoder output *select*

⇕	0 ~ 1	⇨	0		RW	Bit			

Set as follows to select the source of the output signals for terminals 49, 50, 52, 53:

16.06	Source
0 (default)	Second encoder
1	Encoder connected to the 15-way D-type connector on the Drive

16.07 Simulated-encoder output scaling

⇕	0 ~ 15	⇨	0	(See below)	RW	Uni			

If the frequency of the output signals on terminals 49, 50, 52, 53 are required to be a fraction of the source signals, set **16.07** at the required scaling factor as follows:

$$\textbf{Scaling} = 2^{[16.04]}$$

For example, for the output signals to be $^{1}/_{16}$ of the source, set **16.07** at 4 ($16 = 2^{4}$)

16.08 Simulated-encoder – F/D output *enable*

⇕	0 ~ 1	⇨	0		RW	Bit		

Set as follows to select the required output mode for terminals 49, 50, 52, 53:

16.08	Output mode
0 (default)	Quadrature AB
1	Frequency and direction

16.09 Second encoder – input termination *disable*

⇕	0 ~ 1	⇨	0		RW	Bit		

By default, 120Ω termination resistors are connected on the signal inputs. To disconnect these resistors, set **16.09** at 1.

16.09 has no effect on the Freeze inputs . If required, see **16.11** *Second encoder – Freeze input termination disable.*

16.10 Second encoder – Freeze inputs enable

⇕	0 ~ 1	⇨	0		RW	Bit		

Set as follows to select the required function of terminals 54 and 55:

16.10	Function of terminals *54*, *55*
0 (default)	Z marker-pulse output
1	Freeze input

16.11 Second encoder – Freeze inputs termination *disable*

⇕	0 ~ 1	⇨	0		RW	Bit		

By default, a 120Ω termination resistor is connected on the Freeze inputs. To disconnect this resistor, set **16.11** at 1.

16.09 *Second encoder – input termination disable* has no effect on the Freeze inputs.

16.12 Simulated-encoder Z marker-pulse outputs synchronization *disable*

⇳	0 ~ 1	⇨	0		RW	Bit		

Use **16.12** to control the setting of **16.13** *Simulated-encoder Z marker-pulse outputs synchronization inactive indicator.*

16.13 Simulated-encoder Z marker-pulse outputs synchronization inactive *indicator*

⇳	0 ~ 1	⇨			RO	Bit		

16.13 indicates as follows:

16.13 set at 0

Z marker-pulses are synchronized to the quadrant where the quadrature A and B outputs are both low.

16.13 set at 1

Z marker-pulses can be present in any of the four quadrants, as follows:

A and B both low
A and B both high
A low and B high
A high and B low

See *Z marker-pulse outputs (terminals (54, 55)* in Chapter 5 *Setting Up the UD51.*

A Specifications

A.1 Inputs (terminals 40, 41, 43, 44, 46, 47)

Line loading	1 unit-load
Termination resistors (internal)	120Ω ±5% See **16.09** *Second encoder – input termination disable*
Maximum frequency	210 kHz (quadrature) 420 kHz (F and D)
Maximum applied voltage relative to 0V	±15V
Maximum applied differential voltage	±25V

A.2 Outputs and combined inputs/outputs (terminals 49, 50, 52, 53, 54, 55)

Maximum frequency	210 kHz (quadrature) 420 kHz (F/D)
Absolute maximum applied voltage	±14V
Absolute maximum output current	±200mA
Protection	Current limit with thermal protection

A.3 Temperature and humidity

Ambient temperature range: 0°C to 50°C (32°F to 122°F).
Minimum temperature at power-up: –10°C (14°F)
Maximum humidity: 95% non-condensing at 40°C (104°F)
Storage temperature range: –40°C to 50°C (–40°F to 122°F)

B Diagnostics

B.1 Trip codes

Lower display of the Drive	No.	Conditions
SEP.diS	180	
The type of small option module that the Drive has been programmed to operate with has been removed or is not fitted correctly. Perform either of the following: Ensure the appropriate type of small option module is correctly fitted To operate the Drive in the present configuration, set parameter **00** at **1000** and press the **STOP/RESET** key.		