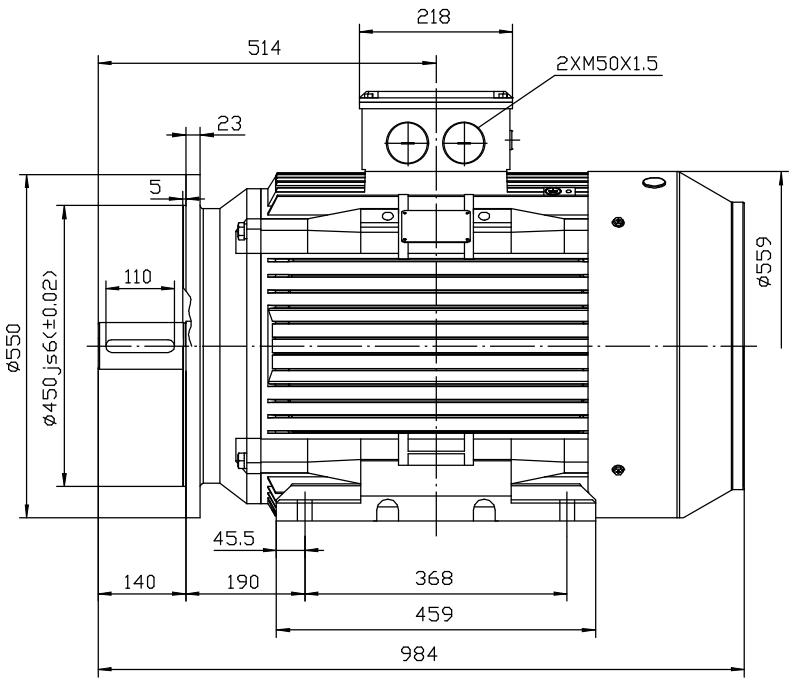

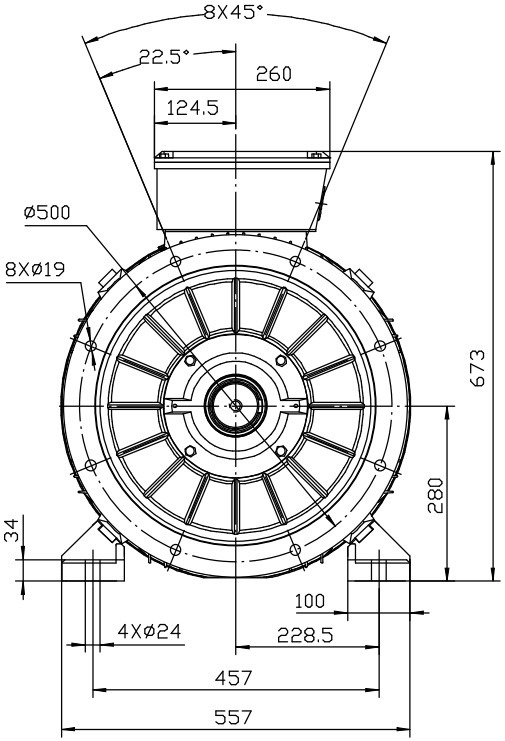

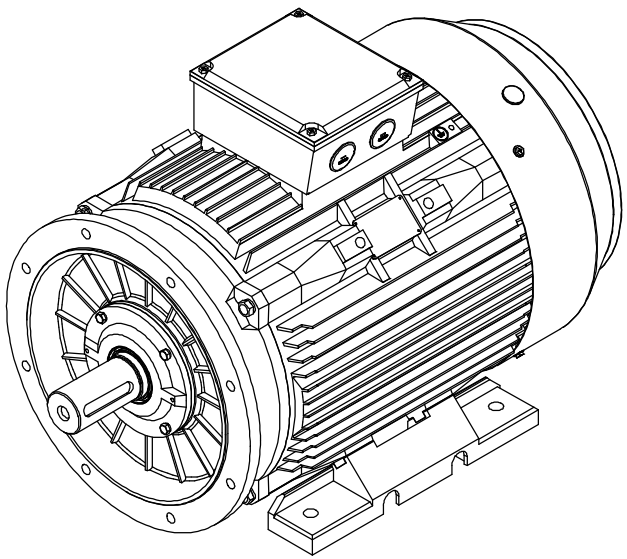

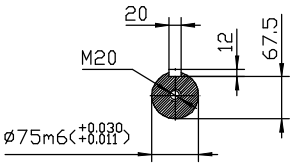

Drawn By	Date	**TC 280s 4, 6 & 8PL B35**
A442313	27/11/2017	
Approved by	Date	
L. Overton	27/11/2017	TEC www.tecmotors.co.uk
Issue No =	Date	
BM01/A001	27/11/2017	