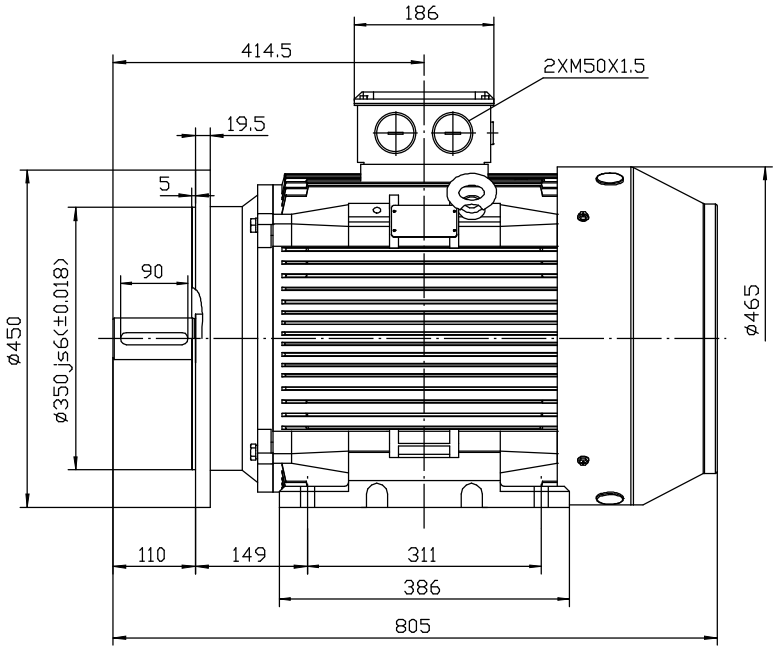

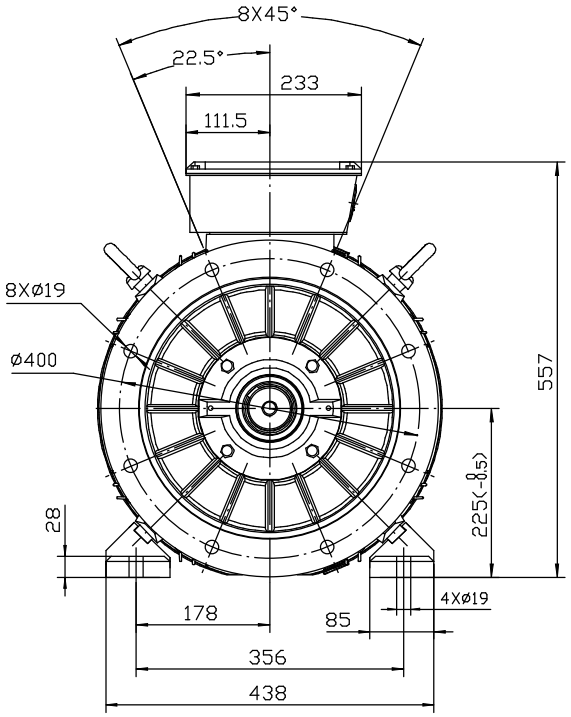

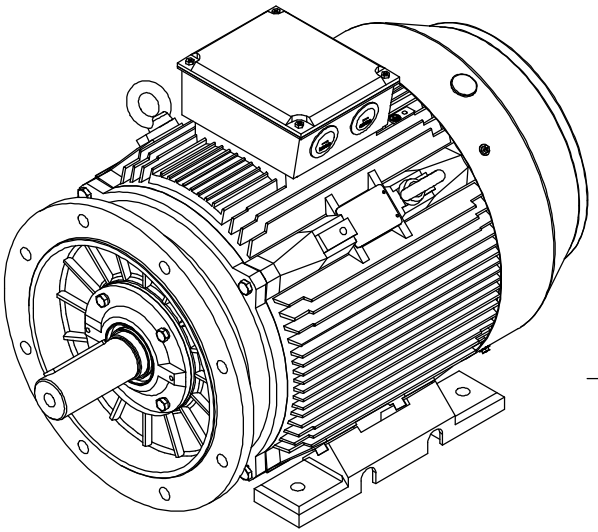

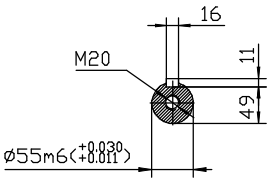

Drawn By	Date	TC 225M-2 B35
A442313	27/11/2017	
Approved by	Date	
L. Overton	27/11/2017	
Issue No =	Date	
BM01/A001	27/11/2017	

www.tecmotors.co.uk