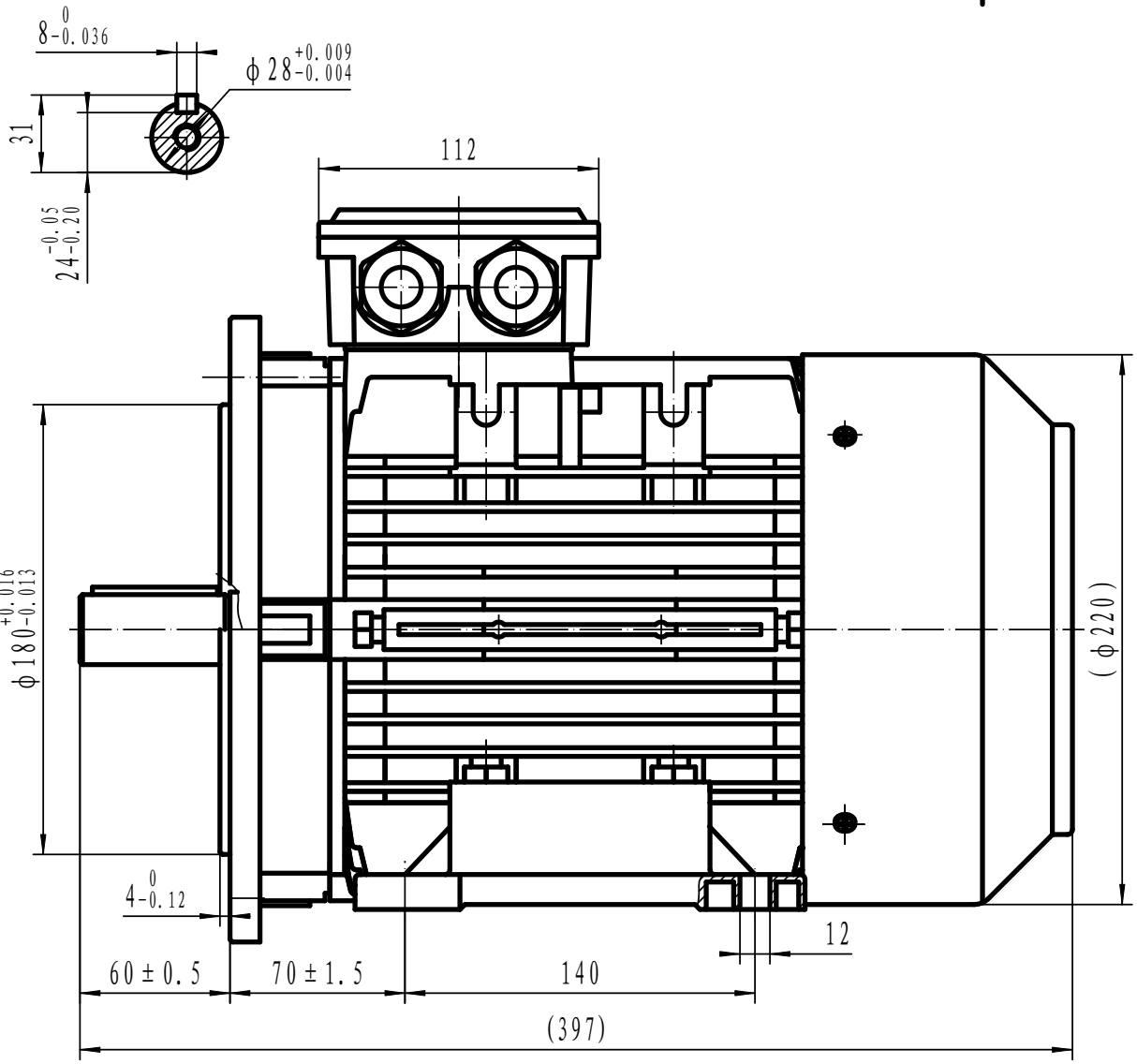

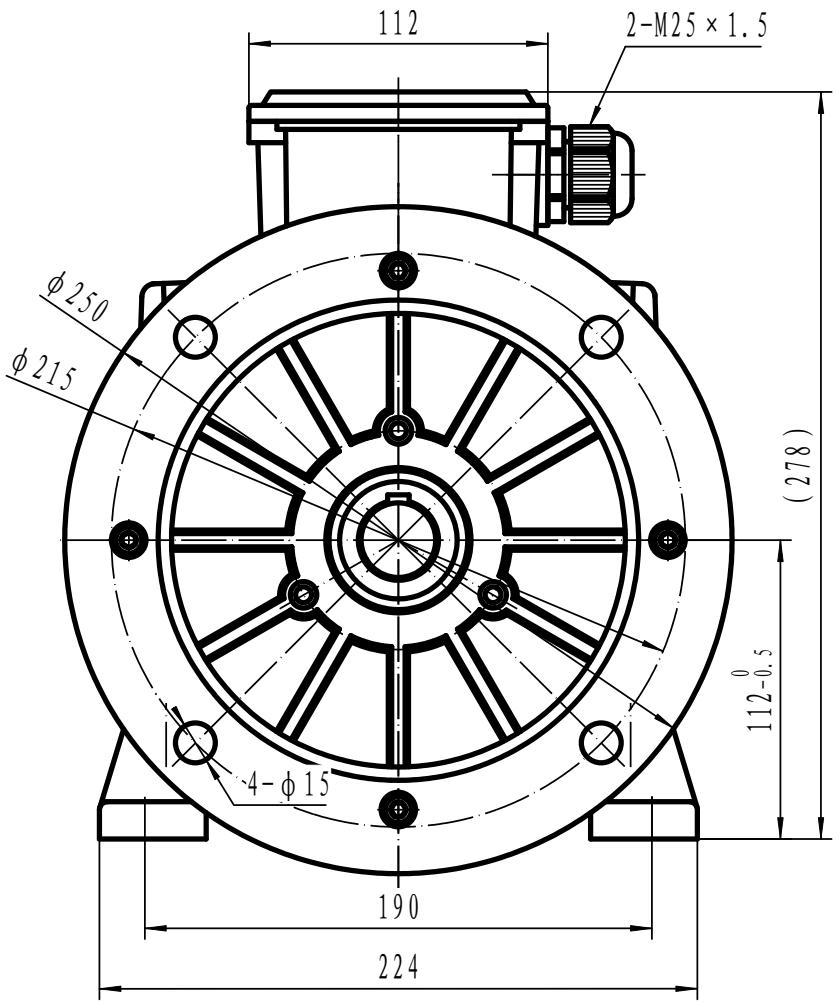

Drawn By	Date	**TA112B35**
TECHTOP	27/11/2017	
Approved by	Date	
L. Overton	27/11/2017	TEC www.tecmotors.co.uk
Issue No =	Date	
001/A	27/11/2017	