DIMENSION DRAWING; SPK160BB4 (Replace 160M) IC06

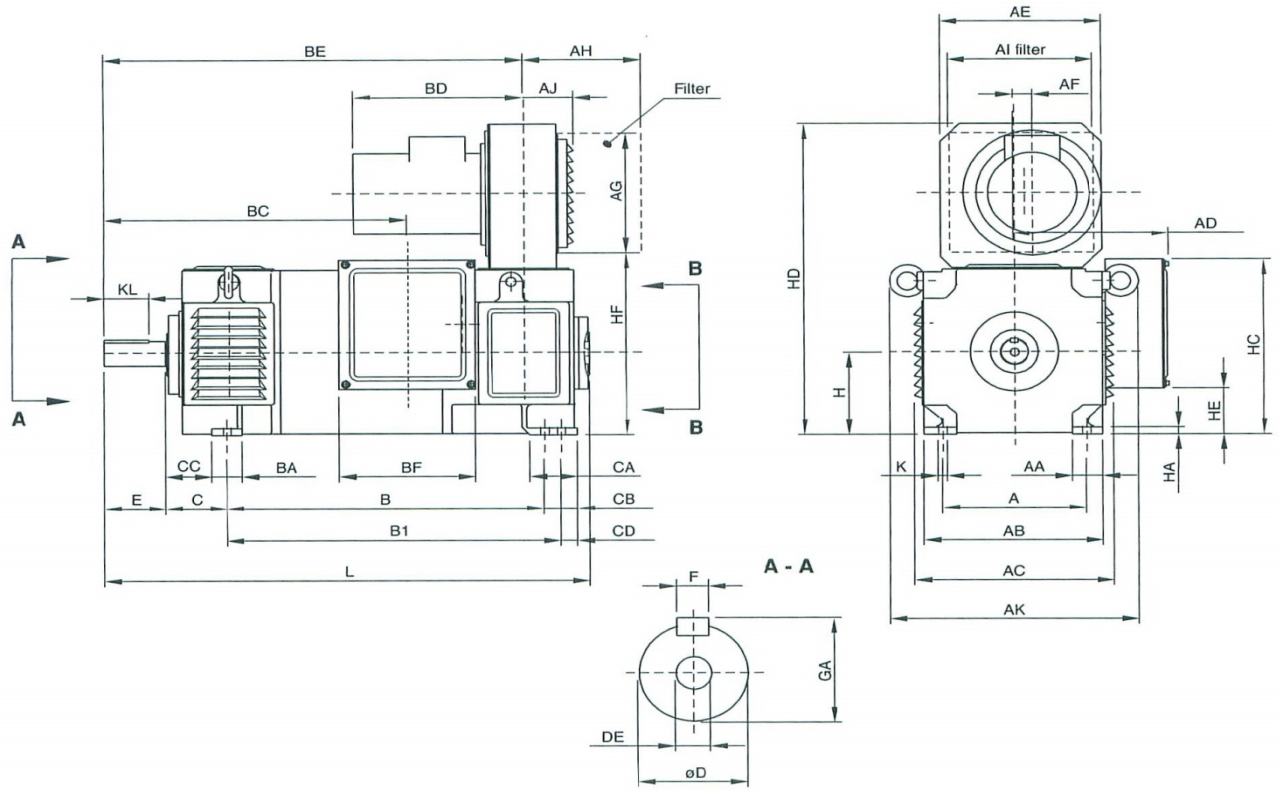

Dimensions in mm

SPK160BB4	A	AA	AB	AC	AD	AE	AF	AG	AH	AI	AJ	AK	B	BA	BC	BD	BE	BF	B1	CD	C
	254	56	316	351	274	285	33.5	235	208	235	89	439	**461**	56	473	298	678	240	N/A	N/A	**108**

SPK160BB4	CA	CB	CC	D	DE	E	F	GA	H	HA	HC	HD	HE	HF	K	KL	L No Tacho	Weight
	65	N/A	80	**42**	M12 x 1.75	**110**	**12**	N/A	**160**	14	343.5	611	88.5	356	15	**80**	791	271
																	(1002 Inc Reo)	(275)