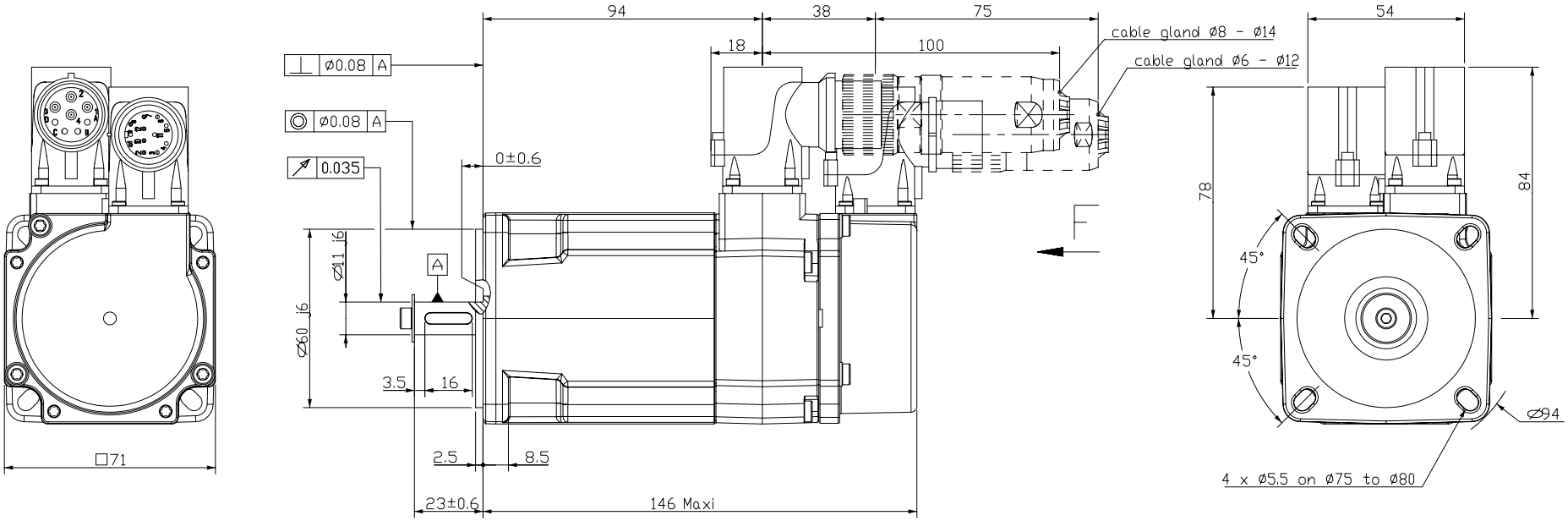

POWER CONNECTOR

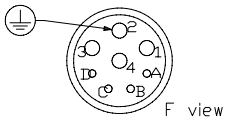

1 : Phase U
2 : Ground
3 : Phase W
4 : Phase V
A : No connection
B : No connection
C, D : Temperature sensor (option)

FEEDBACK CONNECTOR

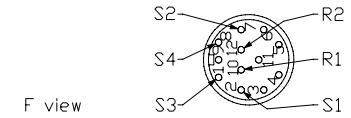

RESOLVER

Feed frequency..... : 8 kHz
Supply voltage..... : 7 V RMS
Input current..... : 70 mA Maxi
Max. electrical error..... : 20' Maxi
Transformation ratio..... : 0.5 typical
Phase shit..... : 20° Maxi
Polarity..... : 1 pair of poles

RELUCTANCE SENSOR

Feed frequency..... : 8 kHz
Input voltage..... : 7 V RMS
Input current..... : 71 mA Maxi
Max. electrical error..... : 8' Maxi
Transformation ratio..... : 0.33 typical
Phase shift..... : 15° Maxi
Polarity..... : 5 pairs of poles

ORIENTATION OF CONNECTORS

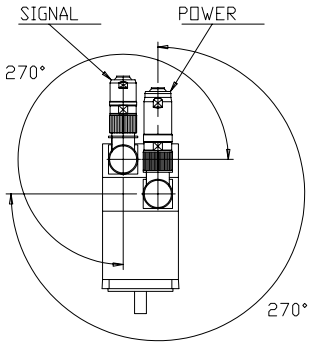

SHAFT END

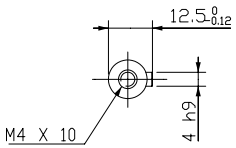

Drawing valid for : R7001

Weight :

This document is the property of PARVEX.Transmission as well as reproduction or copy is not permitted without written authorisation.

Drawn	04/05/00	RP	Visa	
Modifications	c	AM 21110 23/07/02 SP		
	b	AM 20589 10/01/01 PB		
	a	AM 20315 07/07/00 DL	d	AM 21359 02/04/03 NV

Scale 7:10

PARVEX
8 Avenue du lac. BP249
21007-DIJON cedex-FRANCE
www.parvex.com

NX300

OUTLINE DRAWING

Format	F	E	S	G	I
A3	×	×			

344167E7001 d