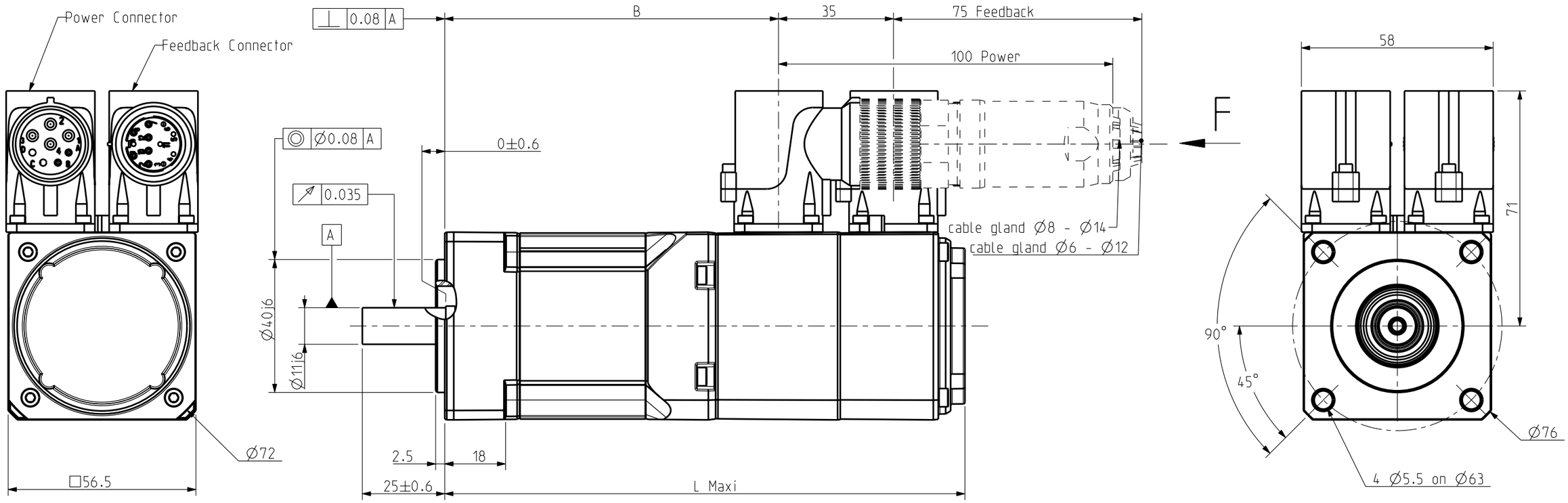

POWER CONNECTOR

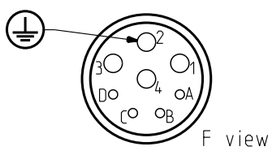

1 : Phase U
2 : Ground
3 : Phase W
4 : Phase V
A : Brake +
B : Brake -
C, D : No connection

FEEDBACK CONNECTOR

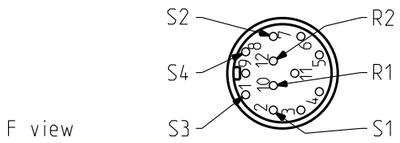

BRAKE

Supply voltage : 24V ⎓ ±10%
Static torque

100°	*
20°	1 Nm
temp	Torque

ORIENTATION OF CONNECTORS

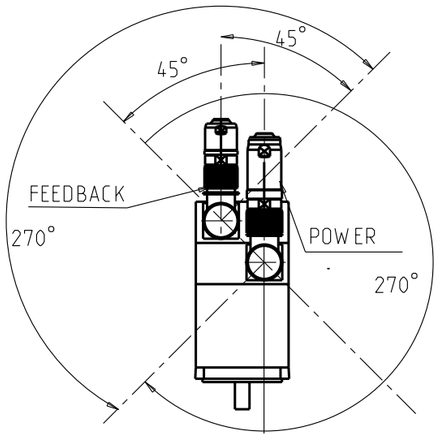

SHAFT END

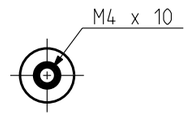

DIMENSIONS

	NX205	NX210
L Maxi	137	157
B	80	100

Drawing valid for :

Weight :

This document is the property of PARVEX.Transmission as well as reproduction or copy is not permitted without written authorisation.

Drawn	30/07/04	BB	Visa	
Modifications				
a	AM 21905 le 03/03/05 BB			

Scale 4:5

SSD DRIVES
PARVEX
8 Avenue du lac. BP249
21007-DIJON cedex-FRANCE
www.parvex.com

NX200

OUTLINE DRAWING

Format	F	E	S	G	I	
A3	x	x				

344594AE7300 a