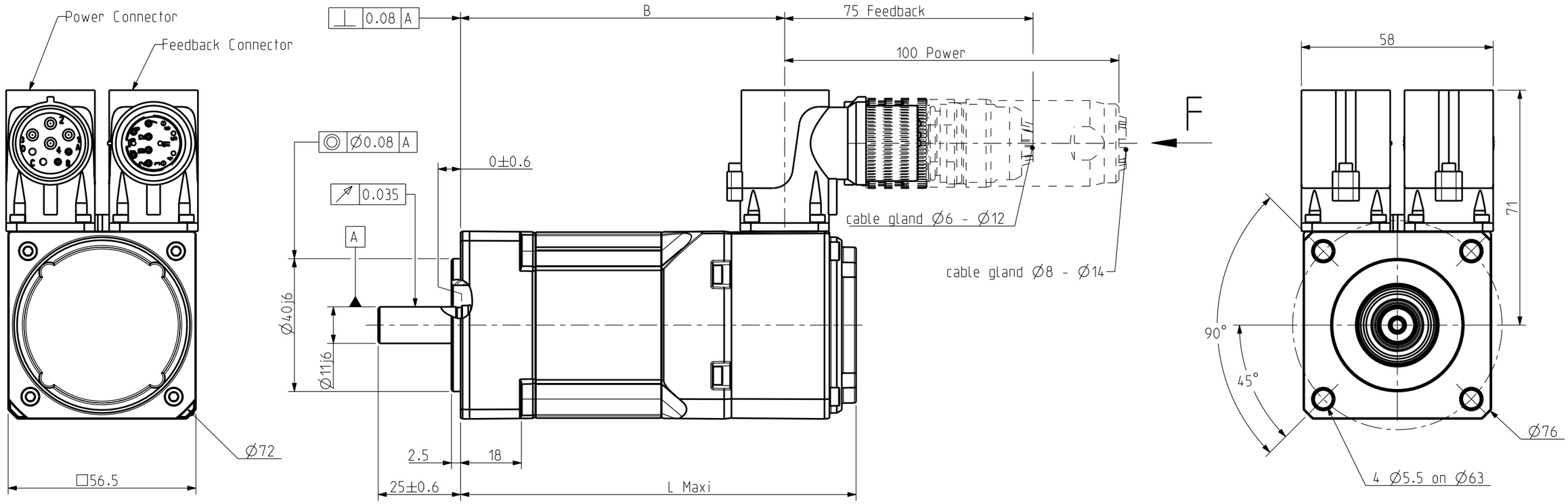

POWER CONNECTOR

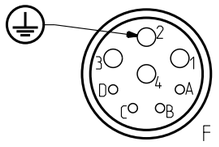

F view

1 : Phase U
2 : Ground
3 : Phase W
4 : Phase V
A : No connection
B : No connection
C, D : No connection

FEEDBACK CONNECTOR

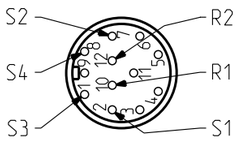

F view

ORIENTATION OF CONNECTORS

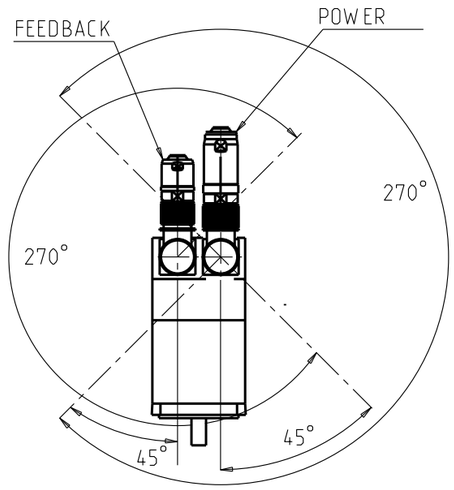

SHAFT END

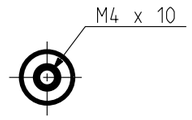

DIMENSIONS

	NX205	NX210
L Maxi	100	120
B	78	98

Drawing valid for :

Weight :

This document is the property of PARVEX.Transmission as well as reproduction or copy is not permitted without written authorisation.

Drawn	30/07/04	BB	Visa	
Modifications	a	AM 21905 le 03/03/05 BB		

Scale 4:5

SSD DRIVES
PARVEX
8 Avenue du lac. BP249
21007-DIJON cedex-FRANCE
www.parvex.com

NX200

OUTLINE DRAWING

Format	F	E	S	G	I
A3	x	x			

344594AE7000 a