AC890 Engineering Reference

Product Manual : Frames G, H & J

HA471397U003 Issue 6

Compatible with Software Version 3.7

2010 Parker SSD Drives, a division of Parker Hannifin Ltd.

All rights strictly reserved. No part of this document may be stored in a retrieval system, or transmitted in any form or by any means to persons not employed by a Parker SSD Drives company without written permission from Parker SSD Drives, a division of Parker Hannifin Ltd . Although every effort has been taken to ensure the accuracy of this document it may be necessary, without notice, to make amendments or correct omissions. Parker SSD Drives cannot accept responsibility for damage, injury, or expenses resulting therefrom.

WARRANTY

Parker SSD Drives warrants the goods against defects in design, materials and workmanship for the period of 24 months from the date of manufacture, or 12 months from the date of delivery (whichever is the longer period), on the terms detailed in Parker SSD Drives Standard Conditions of Sale IA500504.

Parker SSD Drives reserves the right to change the content and product specification without notice.

Chapter 1
Safety

Please read these important Safety notes before installing and operating this equipment.

Caution	WARNING
CAUTION notes in the manual warn of danger to equipment.	**WARNING** notes in the manual warn of danger to personnel.

Safety Information

Requirements

IMPORTANT **Please read this information BEFORE installing the equipment.**

Intended Users

This manual is to be made available to all persons who are required to install, configure or service equipment described herein, or any other associated operation.

The information given is intended to highlight safety issues, and to enable the user to obtain maximum benefit from the equipment.

Complete the following table for future reference detailing how the unit is to be installed and used.

INSTALLATION DETAILS			
Model Number *(see product label)*		**Where installed** *(for your own information)*	
Unit used as a: *(refer to Certification)*	Component Relevant Apparatus	**Unit fitted:**	Wall-mounted Enclosure

Application Area

The equipment described is intended for industrial motor speed control utilising AC induction or AC synchronous machines.

Personnel

Installation, operation and maintenance of the equipment should be carried out by qualified personnel. A qualified person is someone who is technically competent and familiar with all safety information and established safety practices; with the installation process, operation and maintenance of this equipment; and with all the hazards involved.

Safety Information

Product Warnings

	Caution Risk of electric shock		**Caution** Refer to documentation		**Earth/Ground** Protective Conductor Terminal

Hazards

DANGER! - Ignoring the following may result in injury

1. This equipment can endanger life by exposure to rotating machinery and high voltages.
2. The equipment must be permanently earthed due to the high earth leakage current, and the drive motor must be connected to an appropriate safety earth.
3. Ensure all incoming supplies are isolated before working on the equipment. Be aware that there may be more than one supply connection to the drive.
4. There may still be dangerous voltages present at power terminals (motor output, supply input phases, DC bus and the brake, where fitted) when the motor is at standstill or is stopped.
5. For measurements use only a meter to IEC 61010 (CAT III or higher). Always begin using the highest range.
   CAT I and CAT II meters must not be used on this product.
6. Allow at least 5 minutes for the drive's capacitors to discharge to safe voltage levels (<50V). Use the specified meter capable of measuring up to 1000V dc & ac rms to confirm that less than 50V is present between all power terminals and between power terminals and earth.
7. Unless otherwise stated, this product must NOT be dismantled. In the event of a fault the drive must be returned. Refer to "Routine Maintenance and Repair".

Safety Information

WARNING! - Ignoring the following may result in injury or damage to equipment

SAFETY

Where there is conflict between EMC and Safety requirements, personnel safety shall always take precedence.

- Never perform high voltage resistance checks on the wiring without first disconnecting the drive from the circuit being tested.
- Whilst ensuring ventilation is sufficient, provide guarding and /or additional safety systems to prevent injury or damage to equipment.
- When replacing a drive in an application and before returning to use, it is essential that all user defined parameters for the product's operation are correctly installed.
- All control and signal terminals are SELV, i.e. protected by double insulation. Ensure all external wiring is rated for the highest system voltage.
- Thermal sensors contained within the motor must have at least basic insulation.
- All exposed metalwork in the Inverter is protected by basic insulation and bonded to a safety earth.
- RCDs are not recommended for use with this product but, where their use is mandatory, only Type B RCDs should be used.

EMC

- In a domestic environment this product may cause radio interference in which case supplementary mitigation measures may be required.
- This equipment contains electrostatic discharge (ESD) sensitive parts. Observe static control precautions when handling, installing and servicing this product.
- This is a product of the restricted sales distribution class according to IEC 61800-3. It is designated as "professional equipment" as defined in EN61000-3-2. Permission of the supply authority shall be obtained before connection to the low voltage supply.

Safety Information

CAUTION!

APPLICATION RISK

- The specifications, processes and circuitry described herein are for guidance only and may need to be adapted to the user's specific application. We can not guarantee the suitability of the equipment described in this Manual for individual applications.

RISK ASSESSMENT

Under fault conditions, power loss or unintended operating conditions, the drive may not operate as intended. In particular:

- Stored energy might not discharge to safe levels as quickly as suggested, and can still be present even though the drive appears to be switched off
- The motor's direction of rotation might not be controlled
- The motor speed might not be controlled
- The motor might be energised

A drive is a component within a drive system that may influence its operation or effects under a fault condition. Consideration must be given to:

- Stored energy
- Supply disconnects
- Sequencing logic
- Unintended operation

Chapter 2
Getting Started

A few things you should do when you first receive the unit.

- How the manual is organised
- Initial steps
- Inspect the unit for transit damage
- Packaging and lifting

About this Manual

IMPORTANT **Motors used must be suitable for Inverter duty.**

Note ***Do not attempt to control motors whose rated current is less than 25% of the drive rated current. Poor motor control problems may occur if you do.***

This manual is intended for use by the installer, user and programmer of the 890 drive. It assumes a reasonable level of understanding in these three disciplines.

Note ***Please read all Safety information before proceeding with the installation and operation of this unit.***

It is important that you pass this manual on to any new user of this unit.

How the Manual is Organised

This Engineering Reference manual is organised into chapters, indicated by the numbering on the edge of each page.

The manual is more detailed than the relevant QuickStart manual, and so is of use to the unfamiliar as well as the high-end user.

Initial Steps

Use the manual to help you plan the following:

Installation

Know your requirements:

- certification requirements, CE/UL/CUL conformance
- conformance with local installation requirements
- supply and cabling requirements

Operation

Know your operator:

- how is it to be operated, local and/or remote?
- what level of user is going to operate the unit?
- decide on the best menu level for the Keypad (where supplied)

Programming (using the 890 DSE Configuration Tool)

Know your application:

- create/install the most appropriate Application
- enter a password to guard against illicit or accidental changes
- customise the keypad to the application

Equipment Inspection

- Check for signs of transit damage
- Check the product code on the rating label conforms to your requirement.

If the unit is not being installed immediately, store the unit in a well-ventilated place away from high temperatures, humidity, dust, or metal particles.

Storage and Shipping Temperatures	
Storage Temperature : -25°C to +55°C	Shipping Temperature : -25°C to +70°C

Refer to Appendix E: “Technical Specifications” to check the rating label/product code.
Refer to Chapter 10: “Routine Maintenance and Repair” for information on returning damaged goods.

Packaging and Lifting Details

Caution

The packaging is combustible. Igniting it may lead to the generation of lethal toxic fumes.

- Save the packaging in case of return. Improper packaging can result in transit damage.
- Use a safe and suitable lifting procedure when moving the unit. Never lift the unit by its terminal connections.
- Prepare a clear, flat surface to receive the drive before attempting to move it. Do not damage any terminal connections when putting the unit down.
- Refer to Figure 3.1 for the lifting ring locations. Refer to Chapter 4: Mechanical Details for unit weights. Refer to Chapter 4: Mounting the Drive for further information.

Chapter 3
Product Overview

An introduction to the 890 range of products, and a quick look at the Keypads and available plug-in Options.

- Product range
- Functional diagrams
- Keypads
- Option cards

Product Range

The AC supplied 890SD Standalone Drive is designed to control standard 3-phase ac induction motors, or to be used as an active front-end input section.

These larger models are available in a range of ratings for constant torque and quadratic torque applications. This dual mode feature provides a cost effective solution to general industrial applications, as well as the control of pumps and fans.

- The unit can be controlled remotely using configurable analogue and digital inputs and outputs, requiring no optional equipment.
- Controlling the unit locally using the 6901 Keypad, or remotely using the DSE 890 Configuration Tool gives access to parameters, diagnostic messages, trip settings and full application programming. Other features also become available, such as the advanced sensorless vector control scheme which gives high torque, low speed operation; and a unique Quiet Pattern control system that minimises audible noise from the motor.
- Option Cards can be fitted to the drive to give serial communications, closed loop speed control, and the factory-fitted dynamic braking functions.

IMPORTANT **Motors used must be suitable for inverter duty.**

Note ***Do not attempt to control motors whose rated current is less than 25% of the drive rated current. Poor motor control or Autotune problems may result if you do so.***

The unit is available in three Frame sizes: G, H and J.

	FRAME G Constant 110 – 180kW 175 – 300 HP Quadratic 132 – 220kW 200 – 350 HP Maximum 361A Constant Maximum 420A Quadratic nominal full load output current
	FRAME H Constant 200 – 280kW 350 – 450 HP Quadratic 250 – 315kW 400 – 500 HP Maximum 520A Constant Maximum 590A Quadratic nominal full load output current
	FRAME J Constant 315kW 500HP Quadratic 355kW 550HP Maximum 590A Constant Maximum 650A Quadratic nominal full load output current

Note ***All kW ratings are at 400VAC, all HP ratings are at 460VAC.***

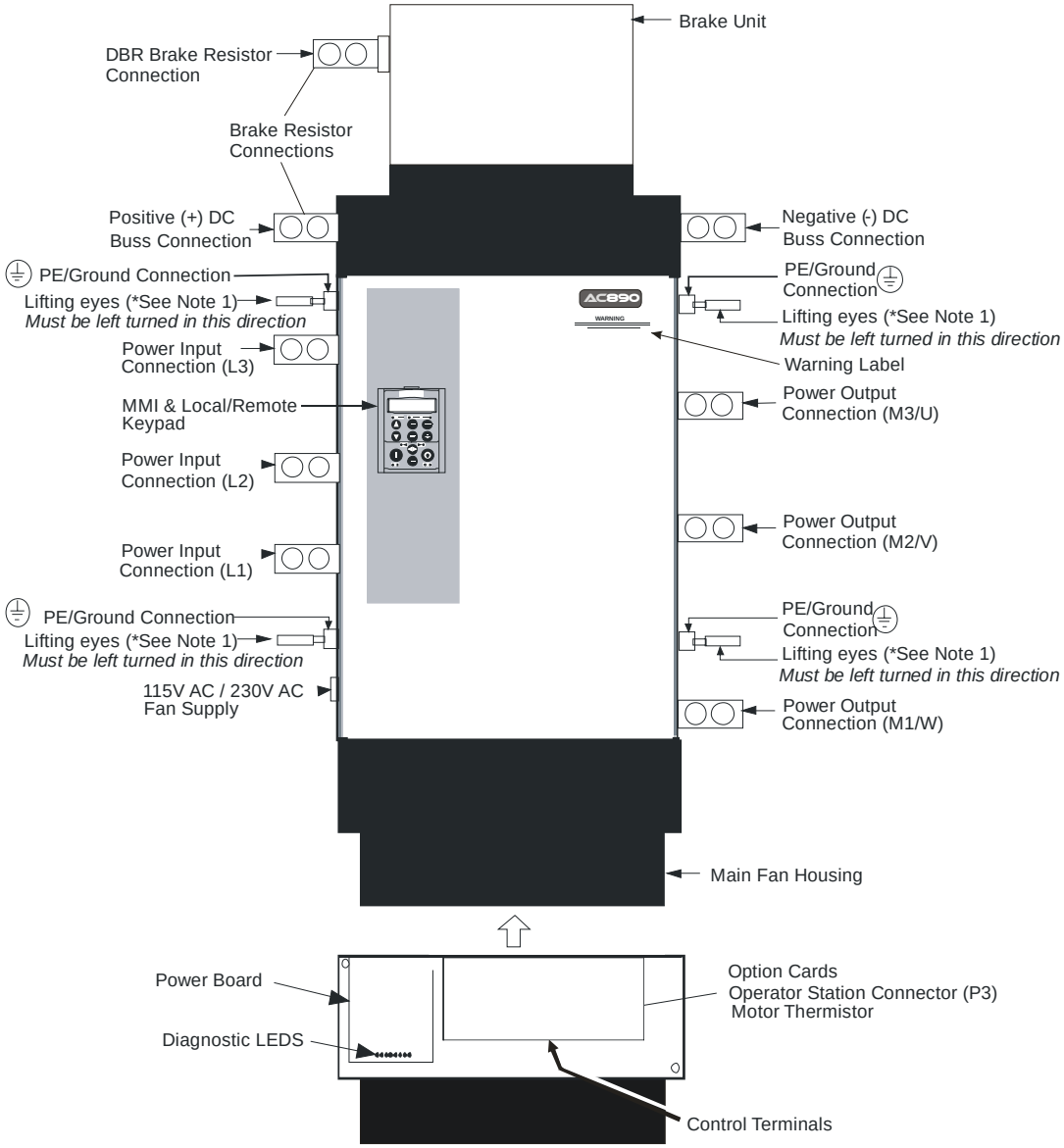

Note 1:

PE / Grounding Connections

Lifting eyes must be replaced with supply and motor earth (ground) connections using M10 bolts and washers supplied Under no circumstances should lifting eyes be used to make the PE / grounding connection.

Figure 3.1 Component Identification

Functional Diagram

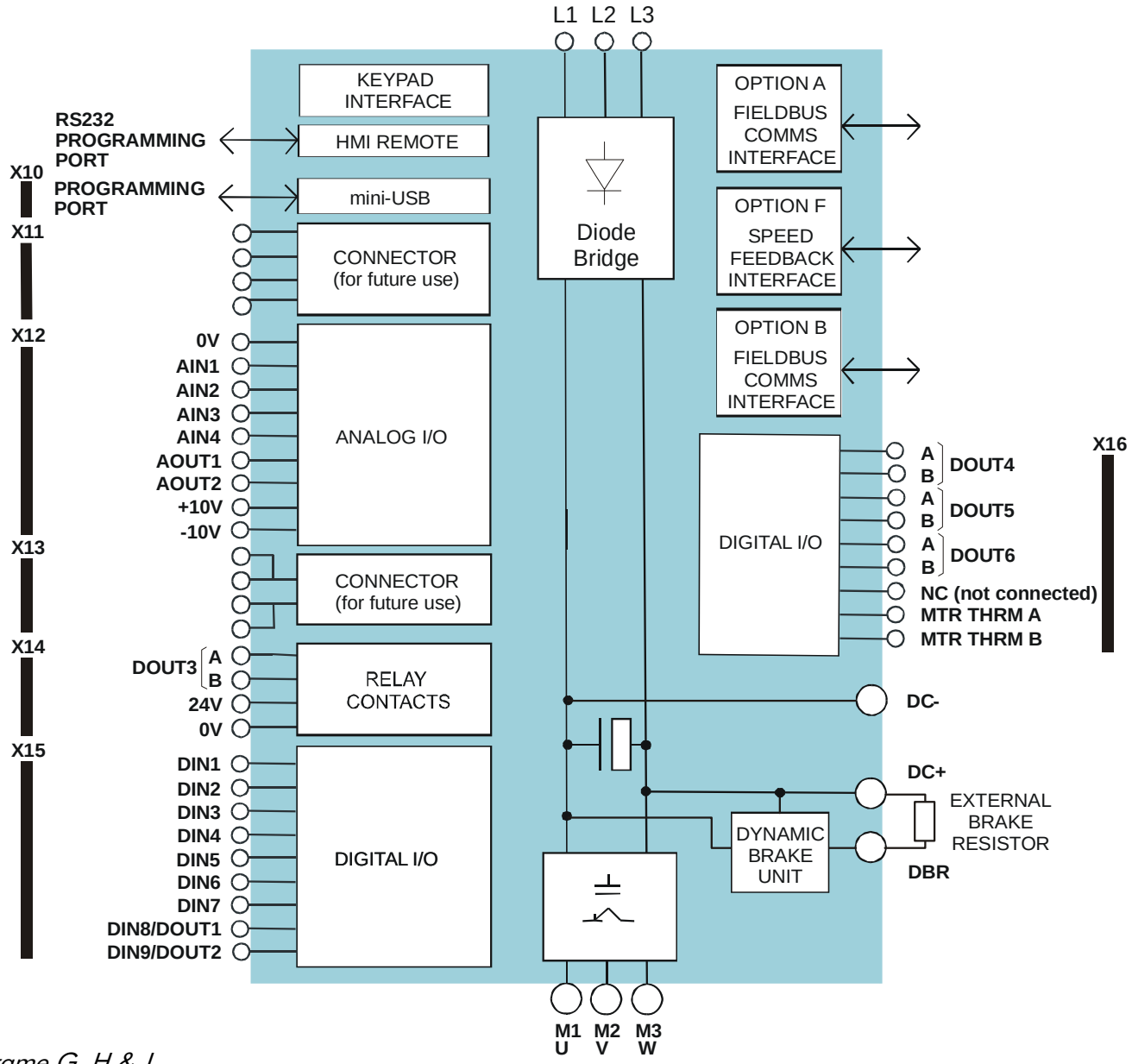

Keypad

The 890SD is fitted with the 6901 Keypad.

It provides Local control of the 890. For example, you can start and stop the motor and check on diagnostic information. It provides plain language programming and can also upload, store and download parameters.

The 6901 keypad fits to the front of the 890SD.

You can also remote-mount the 6901 keypad up to 3 metres away. For remote-mounting, you'll need the correct Remote Mounting Kit. Refer to Chapter 7: "The Keypad".

Option Cards

The 890SD Standalone Drive can be fitted with a range of Option Cards. They are plugged into the removable Control Board.

- Feedback Board : Resolver type, Encoder type
- Fieldbus Comms - all major protocols

These are easily fitted to the plug-in Control Board.

For full details of the options available refer to Appendix A.

Control Board Access

You can access this board from the front of the unit by removing the lower front cover.

- It contains a Processor that provides a range of analog and digital inputs/outputs, together with their reference supplies.
- It has connections for the range of Option Cards.
- There is a mini USB port for connection to a PC. Use Parker SSD Drives' DSE 890 (Drive Systems Explorer) Configuration Tool to graphically program and configure the drive.

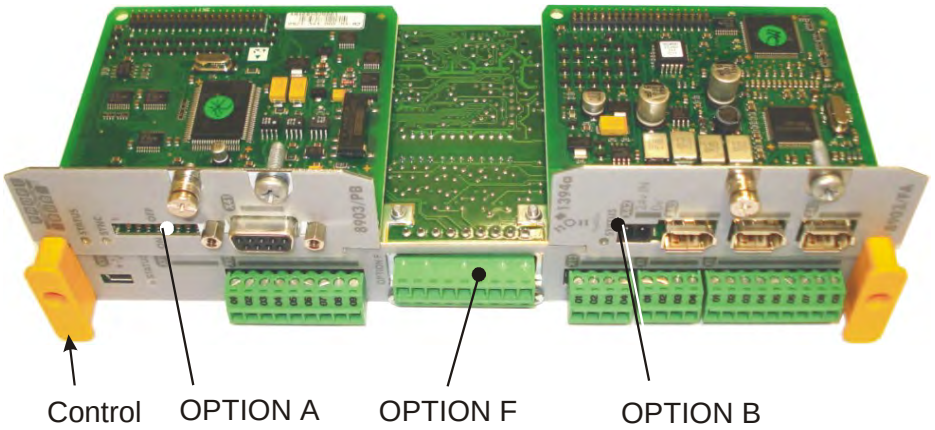

Figure 3.2 Diagram showing Option Cards fitted to the Control Board

Chapter 4

890SD Standalone Drive

This chapter describes the mechanical and electrical installation of the 890SD Standalone Drive. It discusses configuring your system, and how to turn the motor for the first time.

Follow the steps for a successful installation.

- Step 1: Mechanical Installation
  - Mechanical Installation Diagram
  - Enclosure details
  - Mounting the drive
  - Air flow
  - Installing the External Vent Kit (Frame G)
  - Fitting the Top Vent and Gasket (Frames H & J)
  - AC Line Choke
  - Main Cooling Fan and Supply Requirements
- Step 2: Connecting power
  - Wiring Diagram
  - Power Wiring and Protective Earth (PE) Terminals
  - Motor thermistor connections
- Step 3: Control connections
  - Control connection diagram
  - 890SD minimum control connections
- Step 4: Powering-up the Unit
  - 4.1: Apply the 3-Phase Supply
  - 4.2: Configure the 890SD Standalone Drive
  - Set-up parameters
- Step 5: Run the motor
  - The Autotune feature
  - Initial start-up routines

Step 1: Mechanical Installation

Install the 890 units and associated equipment into the cubicle. The diagram shows a typical layout using Star Point earthing for EMC compliance. Refer to Appendix C for further information.

KEY

- **A** Analog Clean Earth
- **B** Back plate
- **C** Cubicle
- **E** Dirty Earth
- **F** Filter (optional)
- **G** Star Point Earth
- **M** Metal Work Earth
- **N** Vent Kit with (optional) Drive Brake Unit
- **P** Fuse or circuit breaker
- **R** AC Line Reactor
- **S** Signal/Control Screen Earth
- **T** Auxiliary Supply
- **V** External Fan (Frame J)

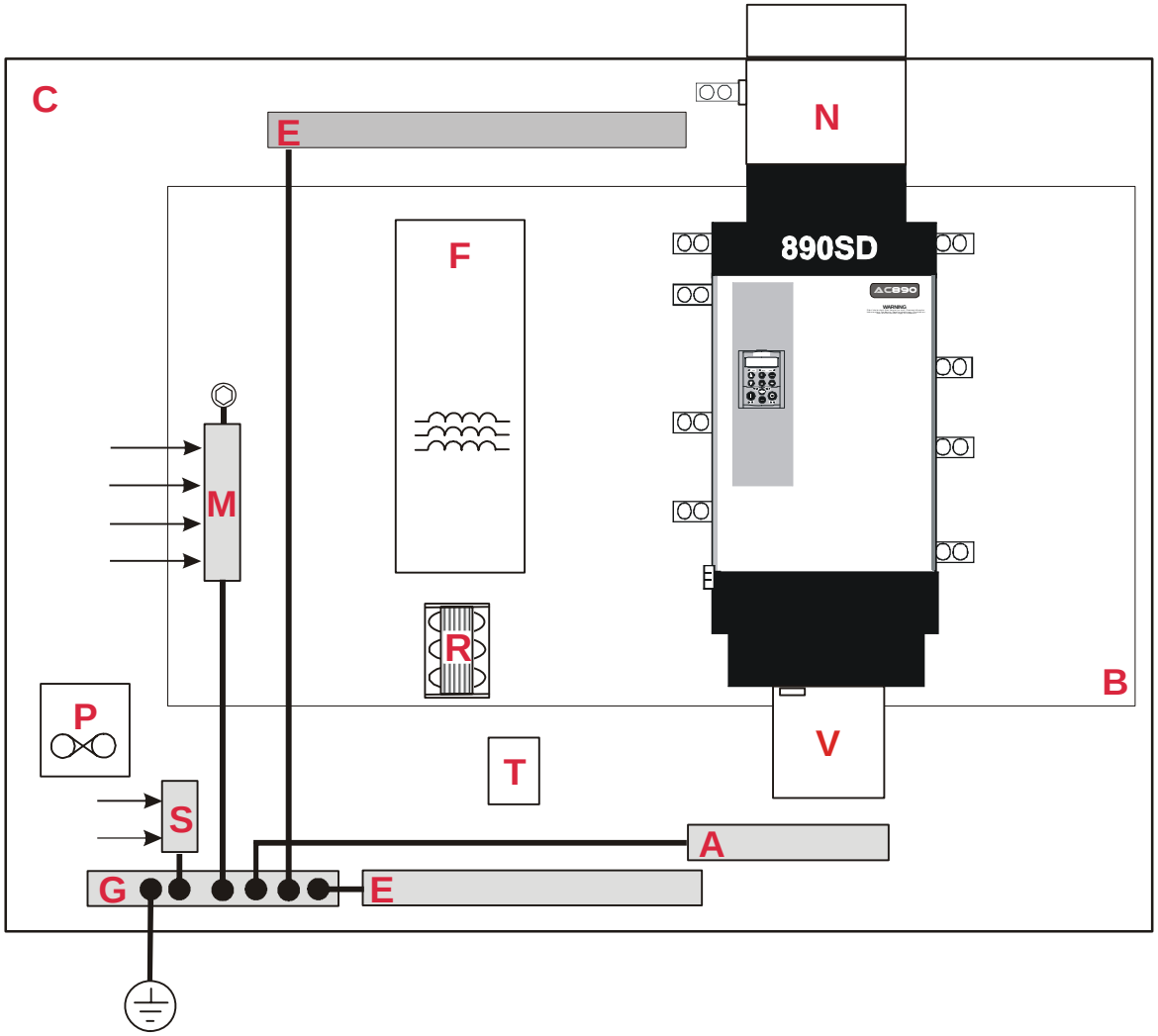

Figure 5.1 A Typical Cubicle Layout (wiring not shown)

Key to Layout Diagram

A	Analog Clean Earth	This must be insulated from the back panel. Analog reference X12/01 or digital reference X14/04 must be connected to this busbar, avoiding earth loops.
B	Back-plate	Earth the backplate to the star point (G).
C	Cubicle	The 890 must be mounted inside a cubicle complying with the European safety standards VDE 0160/EN50178.
E	Dirty Earth	This must be insulated from the back panel. It is used for all power earths.
F	Filter (optional)	Refer to Chapter 5: "Associated Equipment" for the specified filter. This may help to achieve EMC compliance. Refer to Appendix C.
G	Star Point Earth/Ground	The star point connects all earth busbars. Connect the star point to the incoming safety earth (PE). Note the possible requirement for PE2 connections to each drive, refer to page 4-25.
M	Metal Work Earth	Use the back panel for this earth. It provides earthing points for all parts of the cubicle including doors and panels. Connect cubicle to earth/ground via cubicle PE terminal.
N	Vent Kit with (optional) Drive Brake Unit	Fit the Vent Kit to the drive. A Drive Brake Unit can also be fitted if required.
P	Fuse or Circuit Breaker	Fuse rating - refer to Appendix E. We don't recommend the use of circuit breakers (e.g. RCD, ELCB, GFCI), but if their use is mandatory, use only a Type B RCD.

Key to Layout Diagram

R	AC Line Choke	An AC line choke **MUST** be fitted. This may help to achieve EMC compliance. Refer to Chapter 5: "Associated Equipment".
S	Signal/Control Screen Earth	This must be insulated from the back panel. Connect any signal/control screened cables which **do not** go directly to the drives.
T	Auxiliary Supply	115/230V ac fan supply. * Refer to the note on the next page.
V	External Fan (Frame J)	This **MUST** be fitted to the Frame J drive.

Main Points

- This is a cubicle-mounted unit. It is not suitable for wall-mounting.
- Mount 890's vertically on a solid, flat, normally cool, non-flammable, vertical surface.
- Adequate ventilation must be provided. Separate the drive from other equipment in a large multifunction cabinet.
- Avoid excessive vibration.
- The earth points (E, G, M & S) are shown separated - it may be possible to use one large star point without EMC problems, this will depend upon your application.

Note ***Refer to Appendix C for information about EMC compliance.***

Sizing the Enclosure

The enclosure should comply with the European safety standards VDE 0160/EN50178 and will require a tool for opening.

The size of the enclosure will depend on many factors:

- Physical size and number of units
- Ventilation clearances
- Power output, affected by derating due to altitude and ambient temperature

Enclosure/Environmental Information

The information here will help you to specify the enclosure to house the 890(s).

890 Operating Conditions		
Operating Temperature	0°C to 40°C (32°F to 104°F), derate up to a maximum of 50°C Derate linearly at 1% per degree centigrade for temperature exceeding the maximum rating ambient for the drive.	
Product Enclosure Rating	Cubicle Mounted only (with or without Top Vent): IP20 - UL (c-UL) Open Type (North America/Canada) Type 1 IP00 - power terminals	
Cubicle Installation	The 890 must be installed to EN60204 Standard in the cubicle. For USA, the cubicle shall meet the requirements of UL50.	
Cubicle Rating	Cubicle to provide the following attenuation to radiated emissions:	
	EMC Enclosure Standard	*Attenuation to RF in spectrum 30-1000MHz*
	EN61800-3 Category C3	NONE
	EN61800-3 Category C2 Restricted Distribution EN61000-6-3	10db
	EN61800-3 Category C1 Unrestricted Distribution EN61000-6-4	20db

890 Operating Conditions	
Altitude	If greater than 1000m above sea level, derate by 1% per 100m to a maximum of 2000m
Humidity	Maximum 85% relative humidity at 40°C (104°F) non-condensing
Atmosphere	Non flammable, non corrosive and dust free
Climatic Conditions	Class 3k3, as defined by EN50178
Vibration	The product has been tested to the following specification: Test Fc of EN60068-2-6 10Hz<=f<=57Hz sinusoidal 0.075mm amplitude 57Hz<=f<=150Hz sinusoidal 1g 10 sweep cycles per axis on each of three mutually perpendicular axis
Safety	
Overvoltage Category	Overvoltage Category III
Pollution Degree	Pollution Degree II (non-conductive pollution, except for temporary condensation)
Europe	When fitted inside an enclosure, this product conforms with the Low Voltage Directive 2006/95/EC using EN50178 to show compliance.
North America/ Canada	Complies with the requirements of UL508C as an open-type drive.

Mounting the Drive

Prepare a clear, flat surface to receive the drive before attempting to move it. Do not damage any terminal connections when putting the drive down.

IMPORTANT **Under no circumstances must the drive be lifted using the power terminals.**

The drives are supplied with 4 lifting eye bolts fitted to the 4 PE/grounding locations on the sides of the drive for handling using a hoist.

Frames G and H may be set on end for installation by forklift. Frame J may be placed on forklift blades with care to avoid the fan mounting studs and fan power terminals on the bottom (with the fan removed - the fan is shipped separately from the drive).

IMPORTANT **The 890 drive must be securely mounted using all 10 off M8 mounting hole positions as detailed on HG465731U00. Refer to the drawings at the end of this chapter.**

It must be mounted inside a suitable cubicle, depending upon the required level of EMC compliance.

Mechanical Details

Frame G

Weight	100kg (108kg including Dynamic Brake unit)
Dimensions	Refer to drawing HG465731U003

Frame H

Weight	125kg (138kg including Dynamic Brake unit)
Dimensions	Refer to drawing HG465731U002

Frame J

Weight	160kg (176kg including Dynamic Brake unit)
Dimensions	Refer to drawing HG465731U001

Frame G, H & J

Mounting Orientation	Vertical, on a solid, flat, vertical surface
Power Terminations	*3-phase supply and output terminals* Bus-bars with 2 off M12 holes, 25mm separation. 2 off M12 bolt, nut and washer supplied. Tightening torque 97Nm (71.5lb-ft) *Protective earth terminals* 4 off M10 bolts with conical washers - supplied loose. Tightening torque 55Nm (40.5lb-ft) *DC link terminals* Bus-bars with 2 off M12 holes, 35mm separation. Designed to accept semiconductor fuses directly mounted on terminals (eg. Ferraz-Shawmut A100P) 2 off M12 bolt, nut and washer supplied. Tightening torque 97Nm (71.5lb-ft) *Dynamic brake terminal* Bus-bars with 2 off M12 holes, 44mm separation. 2 off M12 bolt, nut and washer supplied. Tightening torque 97Nm (71.5lb-ft)
Control Terminations	Removable screw connectors for 0.75mm2 wire (18 AWG). Terminals will accept up to 1.5mm^2 wire (16 AWG). Tightening torque 0.6Nm (0.4lb-ft)

Air Flow

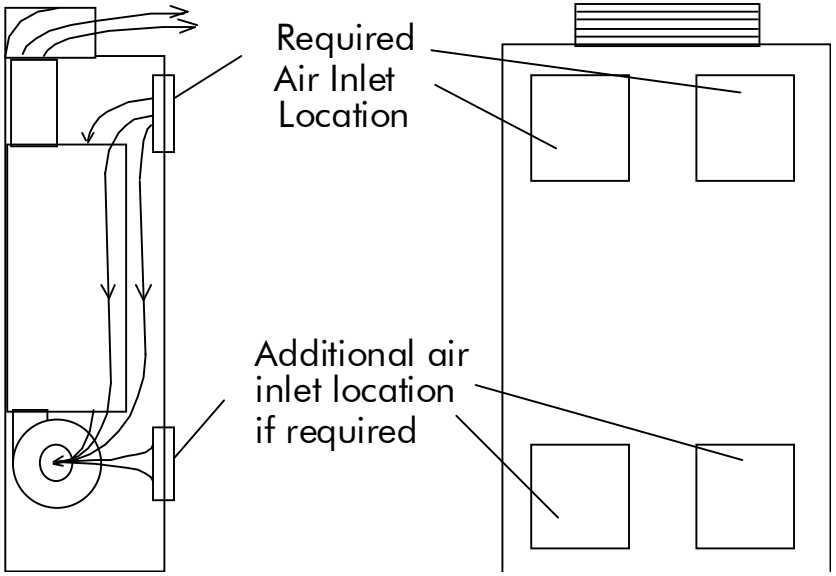

The drives use very large airflows and have been designed with specific airflow patterns within a cabinet. It is generally intended that the bulk of the air comes into the cabinet at the top, flows down (some going through the drive to maintain internal temperatures), into the main cooling fan, through the drive, the brake/exhaust duct (supplied), and finally out the top of the cabinet through vent assembly (supplied).

This flow pattern insures that the top of the cabinet is effectively evacuated and the inside of the drive is cooled by fresh air.

The brake/exhaust duct allows for field installation of a braking module and it gives clearance for inlet air to come from the front of the cabinet into the top of the drive and down; we strongly recommend that this is fitted with the drive whether a brake is fitted or not. It is also important that the top vent is properly fitted to assure that the exhaust air is not recirculated. Refer to fold-out drawings HG465731U001, 2 and 3 at the end of this chapter for typical cubicle layout information.

We recommend that these drives are separated from other equipment in a large multifunction cabinet so that the airflow is better controlled. i.e. air heated by other items should not affect the inlet temperature to the drive's main fan.

Care should be taken in placing the cabinet so that there is sufficient space in front of the cabinet to keep the exhaust air and inlet air separated. If there is not sufficient space, redirection of the exhaust air is required. These drives dissipate substantial heat (refer to Appendix E: “Technical Specificatons” – Electrical Ratings, for Total Power Loss) and therefore sufficient volume for exhaust venting is required to keep the drive from raising the operating temperature beyond that specified in the Environmental Specification.

The volumetric airflow rate for each drive is:
G = 583m^3/hr (343CFM) H = 1505m^3/hr (884CFM) J = 1753m^3/hr (1032CFM).

Ventilation Requirements

The drive gives off heat in normal operation and must therefore be mounted to allow the free flow of air through the ventilation slots and heatsink. Maintain minimum clearances for ventilation, and ensure that heat generated by other adjacent equipment is not transmitted to the drive. Refer to fold-out drawings HG465731U001, 2 and 3 at the end of this chapter for information to ensure adequate cooling of the drive. Be aware that other equipment may have its own clearance requirements. When mounting two or more 890SD units together, these clearances are additive. Ensure that the mounting surface is normally cool.

Installing the External Vent Kit (Frame G)

Parker SSD Drives Part Numbers: Frame G : LA465720U001

Refer to Drawing HG465731U003 Sheet 2 at the end of this Chapter for top panel and mounting plate hole positions.

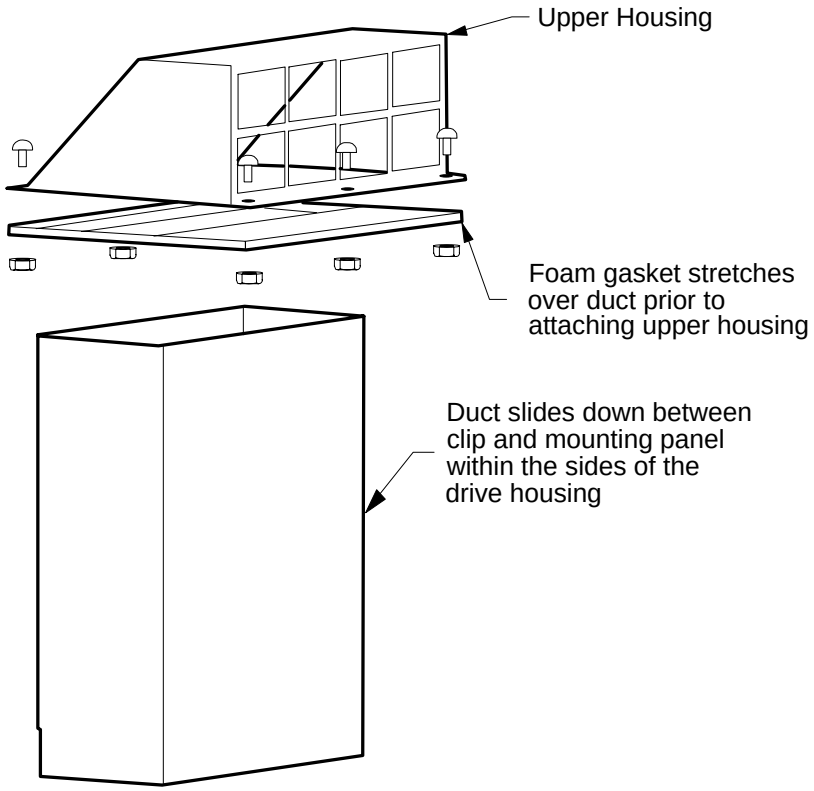

Fitting the Top Vent and Gasket (Frames H & J)

WARNING!

This unit must be operated with either a brake unit or blanking plate fitted to the supplied outlet duct. The top vent is then mounted on to the outlet duct. It is very important that the gasket for the vent is correctly fitted to the brake/exhaust outlet duct. Otherwise, hot exhaust air will flow back into the cabinet and overheat the drive. The brake/exhaust outlet duct should protrude from the top of the cabinet by 5-10mm to ensure engagement with the gasket. Refer to fold-out drawings HG465731U001 & HG465731U002 at the end of this chapter.

This assembly provides IP-22 protection for the drive when fitted properly. The main function is to seal the path of return air to the enclosure as well as protect against falling contaminants. The same assembly is used for frame sizes H & J. The different sizes are accommodated by removal of the gasket inserts.

Supplied parts:

Qty.	Description
1	Vent top
1	Top Vent Baffle
1	Mounting Flange
1	Gasket
4	M6 support studs
2	M6 x 195 hex studs
1	Grille
8	M6x25 panhead slotted screws
8	M6 flat washers
20	M6 hex captive nuts

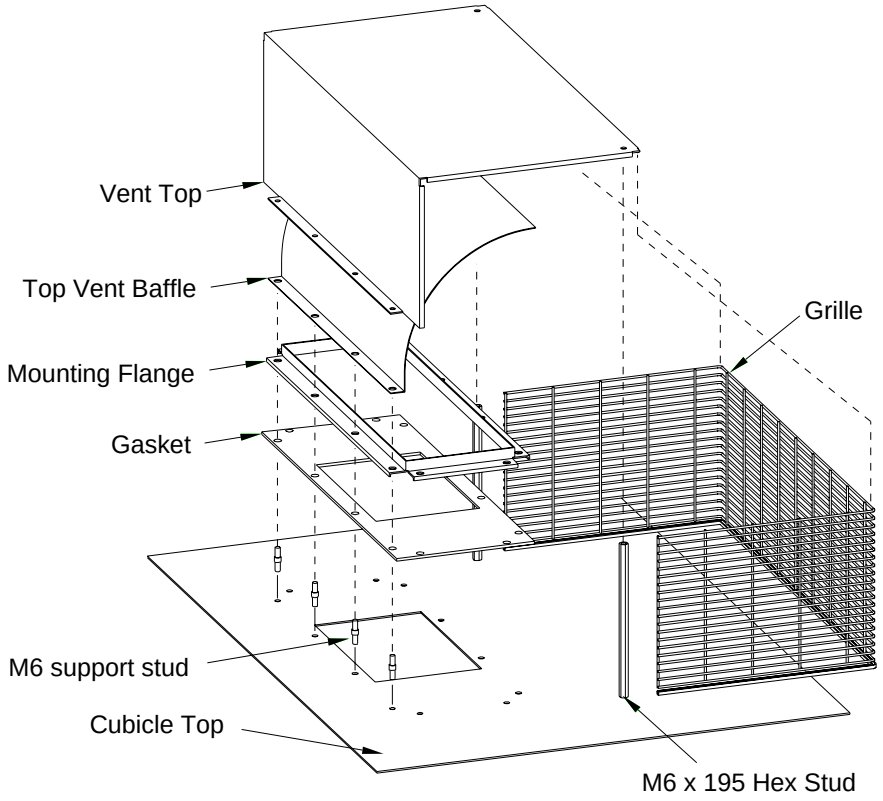

890SD Standalone Drive

Tools Required:
M10 wrench, quantity 2

#3 Phillips or posidrive screwdriver

10mm (3/8”) flat blade screwdriver

Assembly Procedure

On cabinets with removable panels the following procedure should be performed off the cabinet. For non-removable cabinets this procedure should be performed prior to mounting the drive.

Note ***If the drive is not removed, then it must be protected from any cutting chips.***

1. Cut top of cabinet as per drawing HG465731U001 & HG465731U002 at the end of this chapter.
2. Install (4) M/M support studs in rearmost row of holes in pattern
3. Install (2) F/F M6 x 195 support studs in forward most holes with (2) M6 x 10 posidrive screws

Complete the following with the drive and exhaust duct fitted to ensure a good fit of the gasket to the duct.

4. Fit the gasket over the 4 support studs and exhaust duct.
5. Fit the mounting flange over the gasket and attach via (8) M6 x 25 screws, (16) M6 washers, and (8) M6 nuts.
6. Fit the top vent baffle over the support studs.
7. Fit grommet strip to bottom edge of grill and position.
8. Fit vent top over the 4 support studs and grill.
9. Fix vent top via (2) M6 x 10 screws (using a 10 mm wrench on the support studs through the grill is helpful in aligning the stud to the hole in the top) and (4) M6 nuts and washers.

AC Line Choke

IMPORTANT The drive must be used with an AC Line Choke, **however, where a drive is individually supplied from a dedicated transformer with the required impedance, the AC Line Choke is not required**.

Note ***Refer to Appendix E: "Technical Specifications" for further information.***

Caution

Failure to provide the correct 3% line impedance will severely reduce the drives lifetime and could result in catastrophic failure of the drive.

Rating Guidelines for AC Line Chokes

Parker SSD Drives can supply the line chokes listed in Appendix E: "Technical Specifications" - Line Chokes.

If you wish to source your own line choke refer to the individual Electrical Rating tables in Appendix E for the relevant rms line currents. For constant torque applications refer to the AC Line Choke table for the peak instantaneous line current under overload conditions.

Note that the choke thermal design must accommodate the harmonic currents present in the supply waveform. These will vary according to supply impedance, but as a general guideline, the values used in the diagram below can be used.

1. Number of supply phases: 3
2. Frequency of operation: 50 - 60 Hz
3. Choke inductance during overload should be a minimum of 90% of nominal inductance.

Typical AC Line Current Waveform

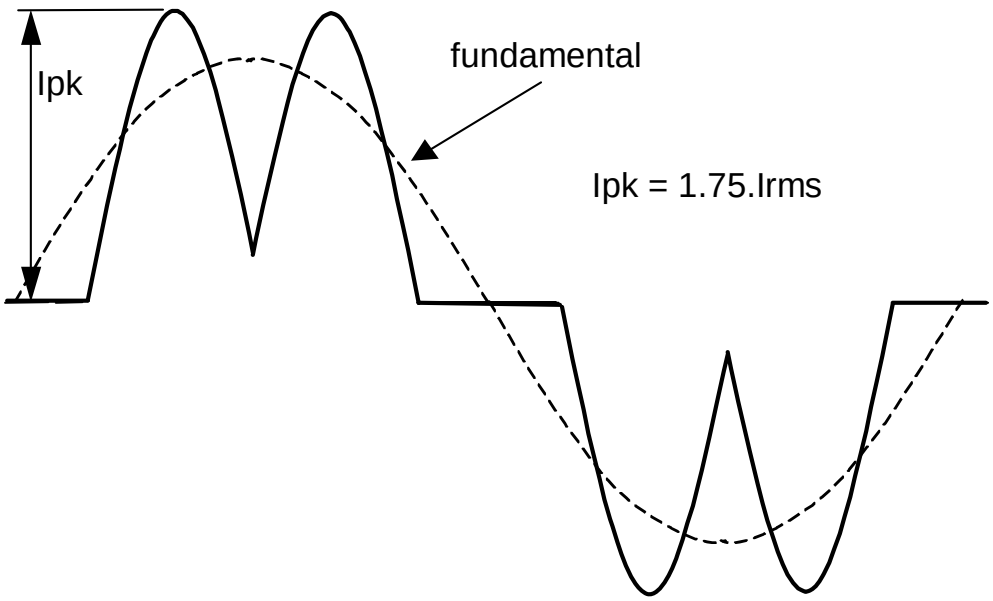

Typical AC Line Harmonic Current Content

(Refer to Parker SSD Drives for exact information)

fundamental	90%
5th harmonic	40%
7th harmonic	15%
11th harmonic	7%
13th harmonic	3%

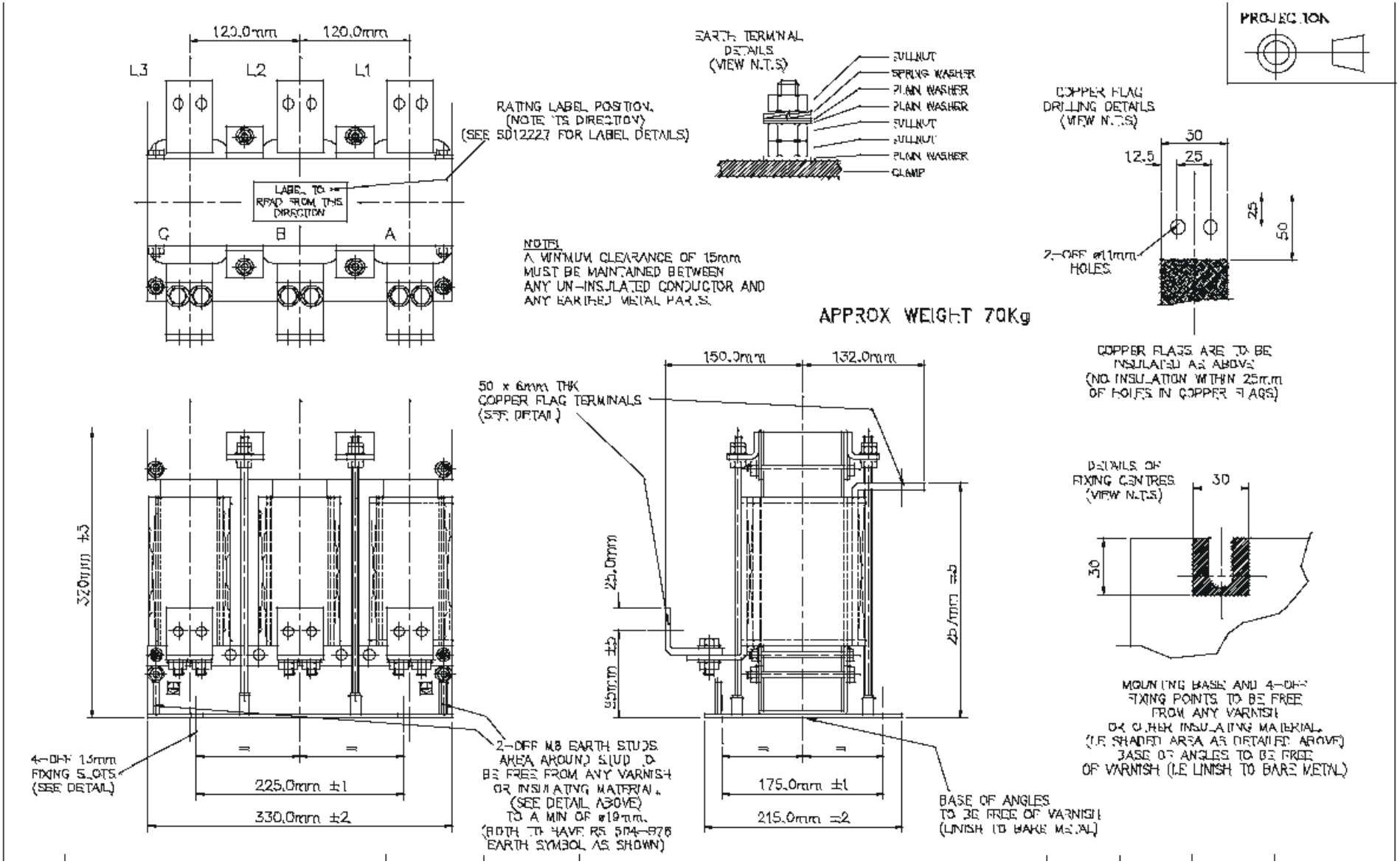

315A, 75µH Choke Outline Drawing for Frames G, H & J - Drawing No. SD12224

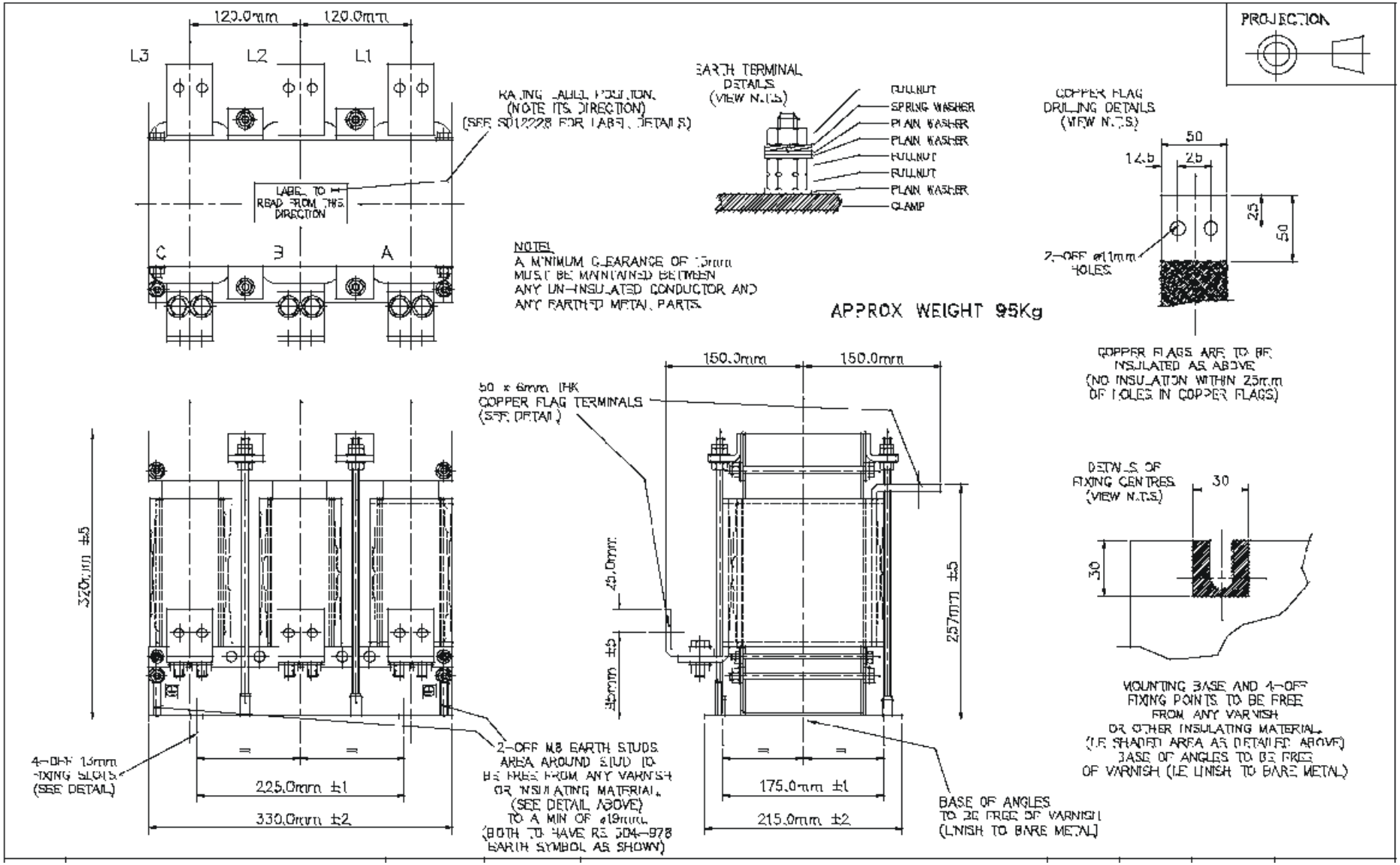

480A, 50µH Choke Outline Drawing for Frames G, H & J - Drawing No. SD12225

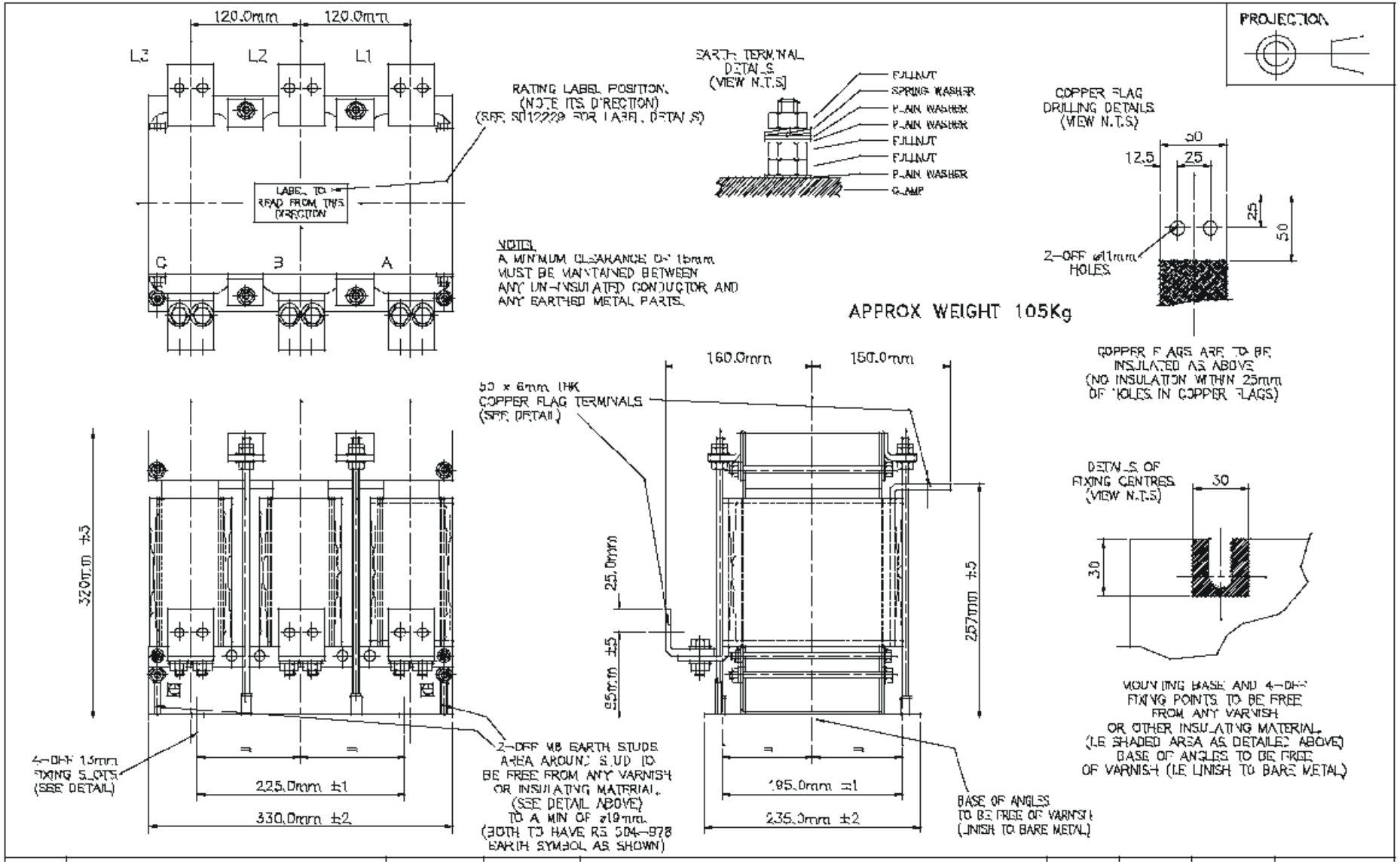

680A, 35µH Choke Outline Drawing for Frames G, H & J - Drawing No. SD12226

Main Cooling Fan and Supply Requirements

The Frame G and H drives have an integral main cooling fan. However, the Frame J drive has a separate main cooling fan which must be fitted to the bottom panel of the enclosure as shown in drawing HG465731U001 at the end of this chapter, with the 4 off M6 nuts provided. Refer to drawing HG463151D002 for fan wiring details (Frame J only) in Chapter 10: “Routine Maintenance and Repair” – Fan Replacement.

The drives require an external single phase supply and fuse protection (motor start type) for the main cooling fan.

Drive	Part Number	Airflow (cfm / m^3/hr)	Supply Volts	Watts	Fuse
Frame G <=132kW / 200HP	DL389775	350/595	115	205	3A
	DL464085	350/595	230	195	2A
Frame G >132kW / 200HP	DL465651U115	475/807	115	315	4A
	DL465651U230	475/807	230	330	2A
Frame G >132kW / 200HP	DL471062U115	475/807	115	405	5A
	DL471062U1230	475/807	230	355	3A
Frame H	DL389776U001	883/1500	115	560	8A
	DL464086U001	883/1500	230	520	4A
Frame J	DL389776U001	1032/1753	115	600	10A
	DL464086U001	1032/1753	230	560	5A

Step 2: Connecting Power

In this section we are going to connect the 3-phase supply to the 890SD Standalone Drive(s).

We'll also connect the motor and the (optional) brake resistor.

IMPORTANT **Please read the Safety Information on page Cont. 3 & 4 before proceeding.**

WARNING

During commissioning, remove the fuses (or trip the circuit breaker) on your 3-phase supply.
Make sure the power is OFF, and that it cannot be switched on accidentally whilst you are working.

Note ***Refer to Appendix E: "Technical Specifications" for additional Cabling Requirements and Terminal Block Wire Sizes.***

Solid-State Short-Circuit Protection

These devices provide Class 10 motor overload protection. The maximum internal overload protection level (current limit) is 150% for 60 seconds in Constant mode, and 110% for 60s in Quadratic mode. Refer to Appendix D: Programming - CURRENT LIMIT for user current limit adjustment information.

An external motor overload protective device must be provided by the installer where the motor has a full-load Ampere rating of less than 50% of the drive output rating; or when the MOTOR STALLED trip is TRUE (TRIPS STATUS::DISABLED WORD 1>>MOTOR STALLED); or when the STALL TIME parameter is increased above 480 seconds.

Wiring Diagram

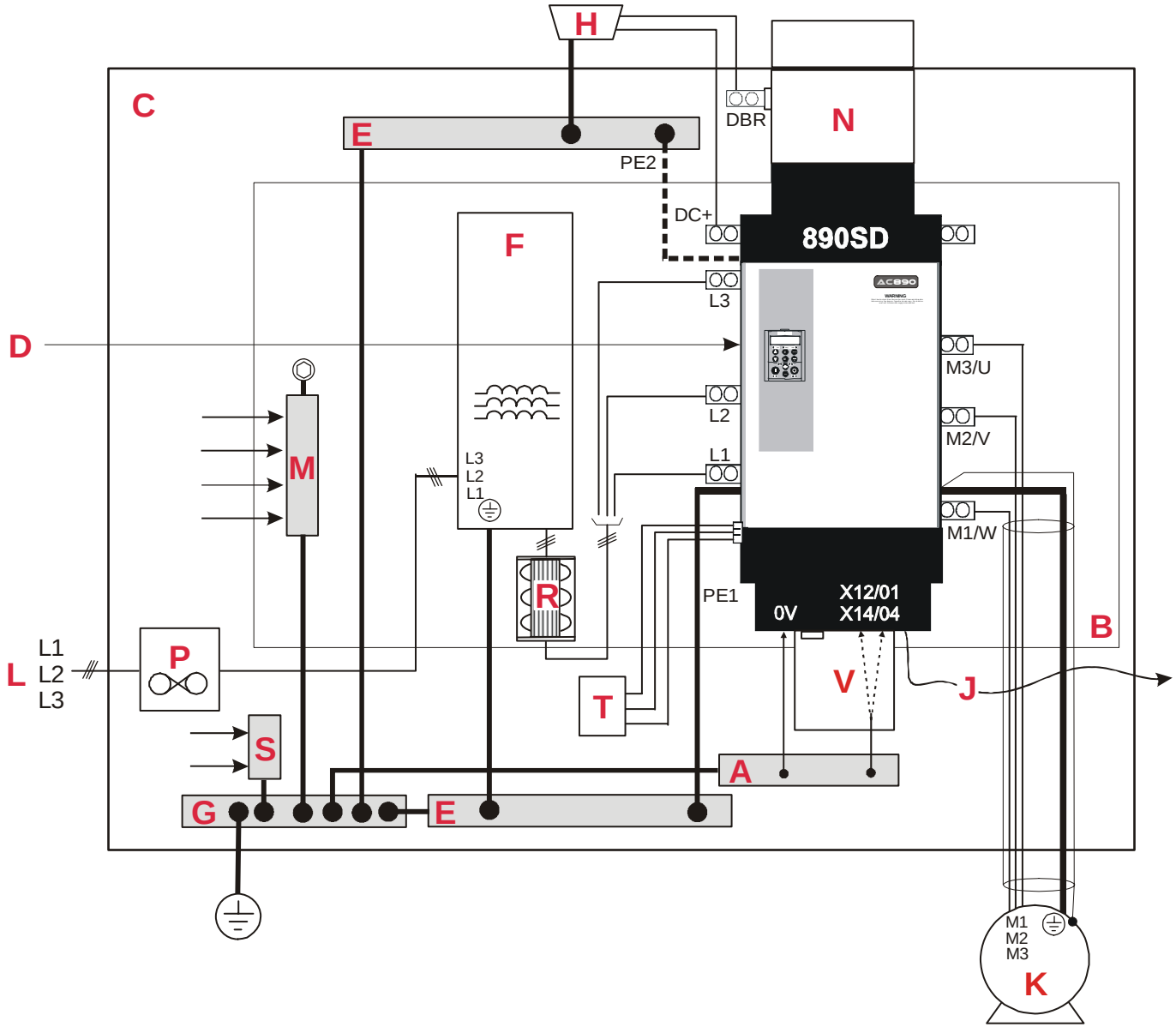

Key to Wiring Diagram

A	Analog Clean Earth	This must be insulated from the back panel. Analog reference X12/01 or digital reference X14/04 must be connected to this busbar, avoiding earth loops.
B	Back-plate	Earth the backplate to the star point (G).
C	Cubicle	The 890 must be mounted inside a cubicle complying with the European safety standards VDE 0160/EN50178.
D	Control Wiring	Control terminals are SELV (Safe Extra Low Voltage), i.e. double-insulated from power circuits. 0.08mm^2 (28AWG) to 2.5mm^2 (12AWG).
E	Dirty Earth	This must be insulated from the back panel. It is used for all power earths.
F	Filter (optional)	Refer to Chapter 5: "Associated Equipment" for the specified filter. This may help to achieve EMC compliance. Refer to Appendix C.
G	Star Point Earth/Ground	The star point connects all earth busbars. Connect the star point to the incoming safety earth (PE). Note the possible requirement for PE2 connections to each drive, refer to page 4-25.
H	Brake Resistor (DC+, DBR)	External brake resistors are available. Refer to Chapter 5: "Associated Equipment". Ensure wiring is rated for highest system voltage.
J	FireWire™ Connection	A very fast external bus (IEEE 1394a) to connect up to 63 units. You will need the FireWire Option Card for each Standalone Drive, refer to Appendix A.

Key to Wiring Diagram

K	Motor (M1, M2, M3)	The motor used must be suitable for Inverter duty. Ensure wiring is rated for highest system voltage. Refer to Appendix E.
L	3∅ Power Supply Cable (L1, L2, L3)	Ensure wiring is rated for highest system voltage. Refer to Appendix E.
M	Metal Work Earth	Use the back panel for this earth. It provides earthing points for all parts of the cubicle including doors and panels. Connect cubicle to earth/ground via cubicle PE terminal.
N	Vent Kit with (optional) Drive Brake Unit	Fit the Vent Kit to the drive. A Drive Brake Unit can also be fitted if required.
P	Fuse or Circuit Breaker	Fuse rating - refer to Appendix E. We don't recommend the use of circuit breakers (e.g. RCD, ELCB, GFCI), but if their use is mandatory, use only a Type B RCD.
R	AC Line Choke	An AC line choke **MUST** be fitted. This may help to achieve EMC compliance. Refer to Chapter 5: "Associated Equipment".
S	Signal/Control Screen Earth	This must be insulated from the back panel. Connect any signal/control screened cables which **do not** go directly to the drives.
T	Auxiliary Supply	115/230V ac fan supply.
V	External Fan (Frame J)	This **MUST** be fitted to the Frame J drive.

Power Wiring and Protective Earth (PE) ⏚ Terminals

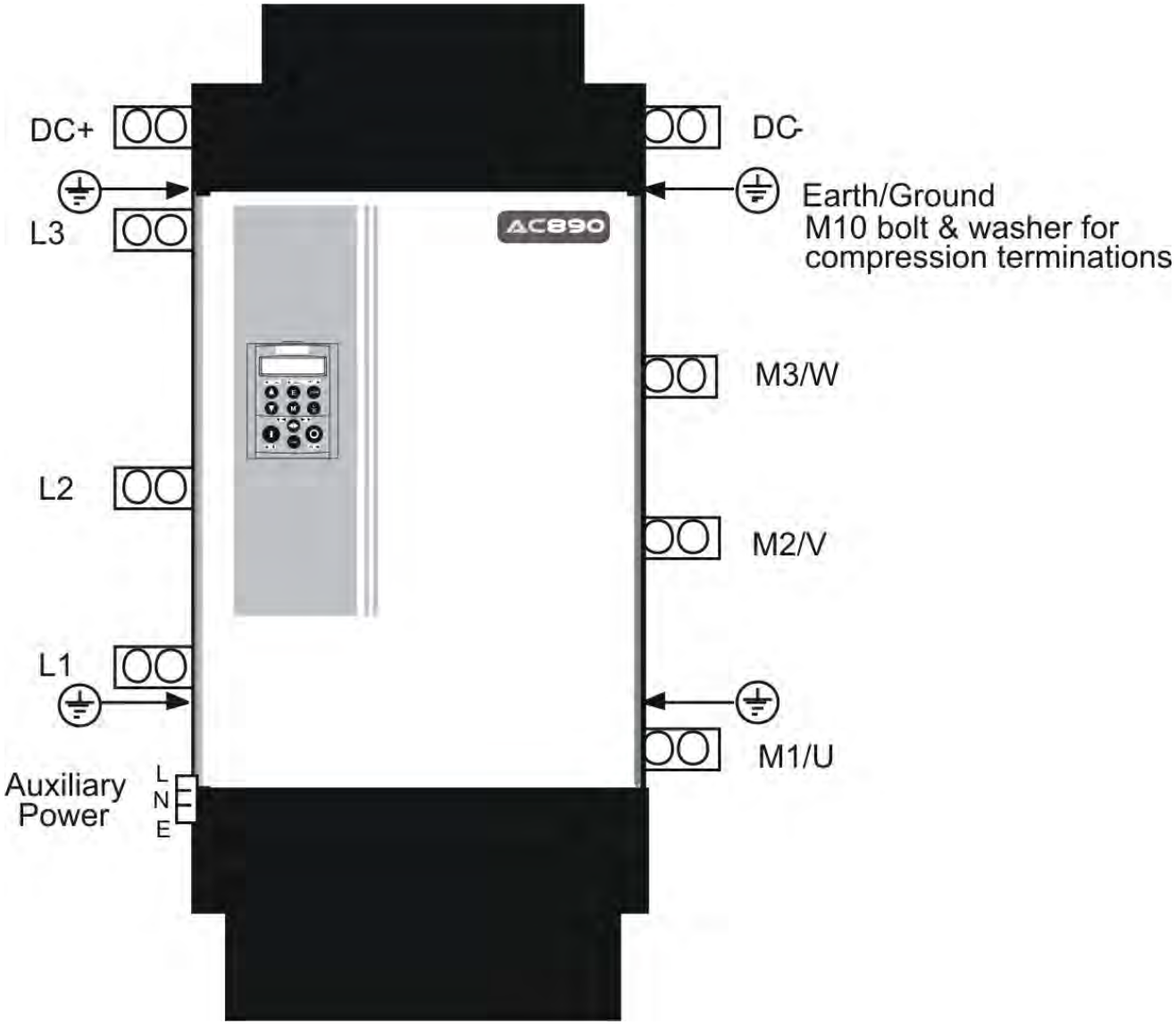

The unit must be **permanently earthed**. Protect the incoming mains supply using a suitable fuse or circuit breaker (circuit breaker types RCD, ELCB, GFCI are not recommended). Refer to Chapter 5: Circuit Breakers.

IMPORTANT **The drive is only suitable for earth referenced supplies (TN) when fitted with an external ac supply EMC filter.**

For installations to EN 60204 in Europe:

Permanent Earthing

Each unit must be **permanently earthed** according to EN 50178. For permanent earthing, EN 50178 states that:

A cross-section conductor of at least 10mm² is required. This can be achieved either by using a single conductor (PE) or by laying a second conductor though separate terminals (PE2 where provided) and electrically in parallel.

Conductors must be sized in accordance with Local Wiring Regulations which always take precedence.

As a guide, refer to the Input Current for the drive given in the Electrical Ratings tables.

Refer to Appendix C: “Certification for the Drive” - EMC Installation Options.

Motor Thermistor Connections

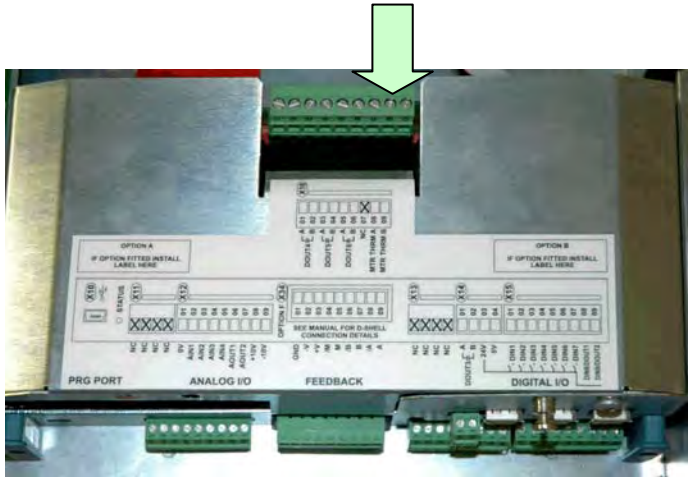

This input (terminal X16) is provided to detect over-temperature in motors fitted with an internal thermistor. There is no polarity to the thermistor connections.

IMPORTANT **This input provides "Basic" insulation only to the SELV control circuits and assumes the motor has "Basic" insulation to the windings/mains circuits.**

The thermistor type supported is PTC `Type A' as defined in IEC 34-11 Part 2. The drive uses the following resistance thresholds:

Rising temperature trip resistance:	1650 to 4000Ω
Falling temperature trip reset resistance:	750 to 1650Ω

If the motor is not fitted with an internal thermistor, you should disable the thermistor trip function either by setting INVERT THERMIST to be TRUE, or by linking the thermistor terminals.

MMI Menu Map

1 SETUP
2 TRIPS
3 I/O TRIPS
└ INVERT THERMIST

Step 3: Control Connections

WARNING

During commissioning, remove the fuses (or trip the circuit breaker) on your 3-phase supply.
Make sure the power is OFF, and that it cannot be switched on accidentally whilst you are working.

Main Points

- The 890 is a system product and is designed for Remote mode operation using the analog & digital inputs/outputs and/or FireWire™ connection. The use of the keypad (Local mode) is for configuration purposes.

  Connecting 890SD Standalone Drives using the FireWire™ Option Cards is recommended for applications requiring high levels of accuracy. Otherwise, use I/O to transfer data from master to slave units.

- The control terminals will accept a single wire of size 1.5mm^2/16AWG. For two wires per terminal, use smaller gauge wire such as 0.5mm^2/22AWG.
- Use screened control cables to comply with EMC requirements. All screens must be terminated at the base of the product using cable glands.
- The control board 0V at X14/04 must be connected to protective (clean) earth outside of the product to meet EMC and safety requirements.
- Feed the control cables into the drive through the metal gland plate and connect to the control terminals. Cables **must** be secured together with a cable tie as close to the terminals as possible.

Control Connection Diagram

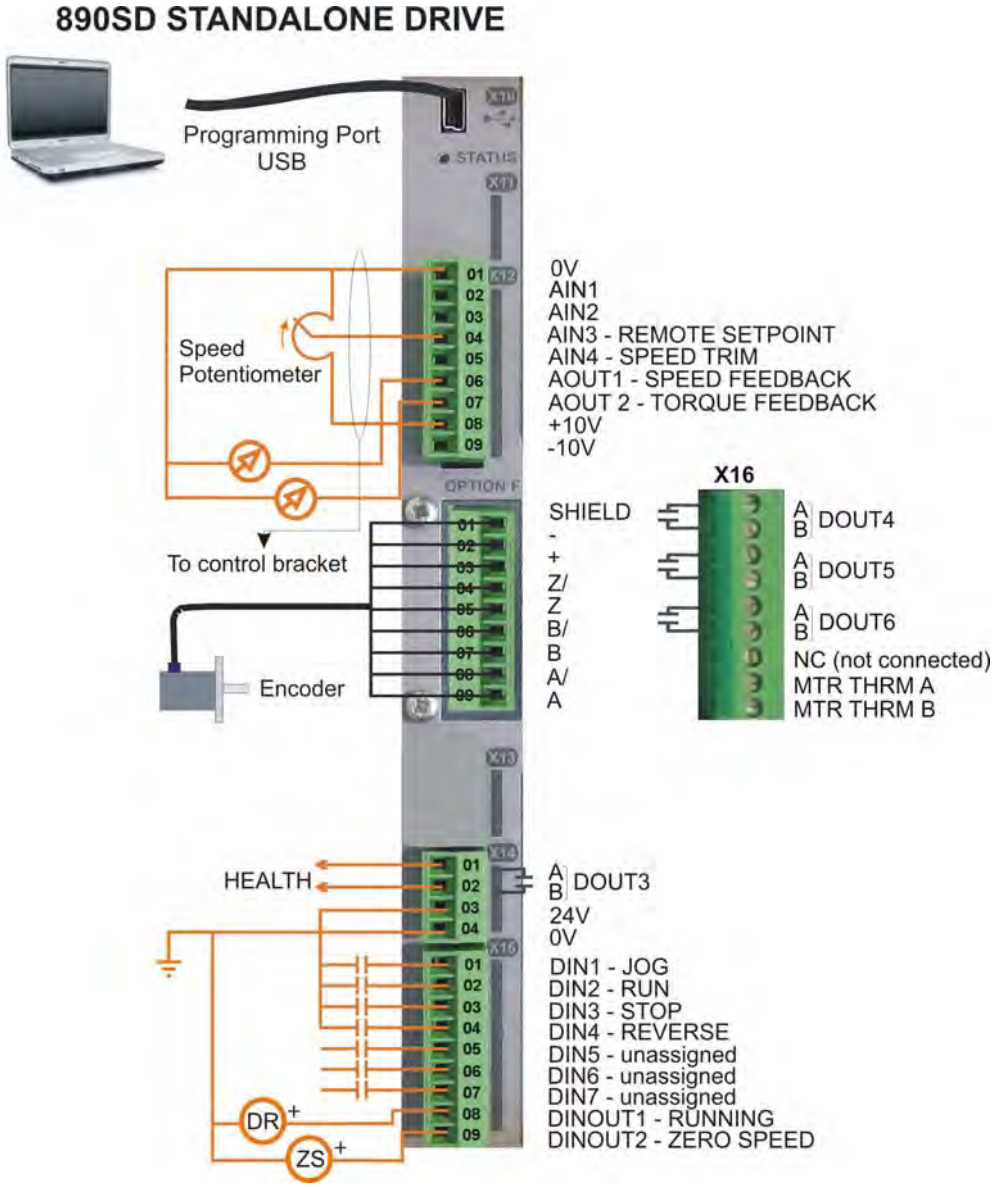

890SD Minimum Control Connections

Minimum Connections

Speed Reference

- Connect a 10kΩ potentiometer at terminal X12:

  X12/01 : Low (CCW)
  X12/04 : Wiper
  X12/08 : High (CW)

- Connect the shield to earth/ground at the control bracket.

OR

- External 2-wire speed reference between:

  X12/01 : negative
  X12/04 : positive

- Connect the shield to earth/ground at the control bracket.

Sequencing

- RUN (maintained contact)

  X14/03 : 24V
  X15/02 : RUN

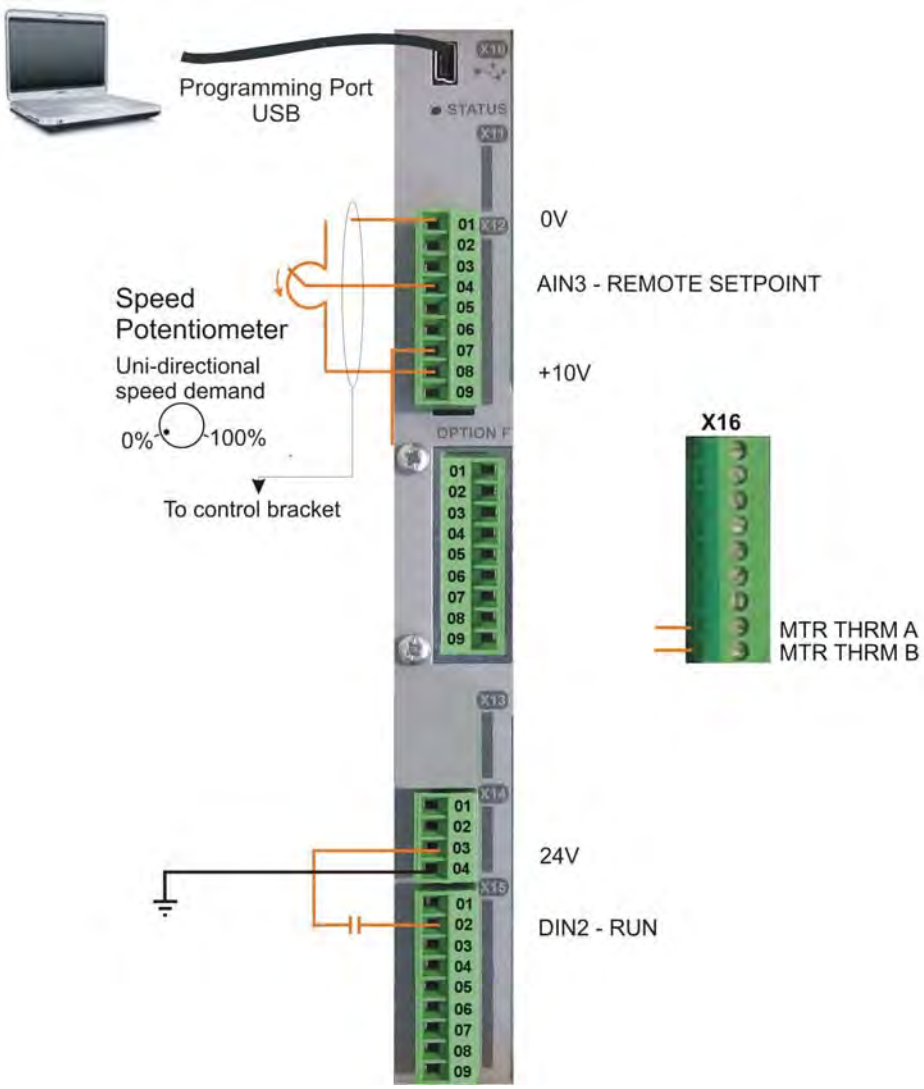

Motor Thermistor

- *Recommended :* Connect to a motor fitted with an internal motor thermistor (connections have no polarity)

OR

- Jumper the terminals

OR

- Disable the thermistor trip function by setting INVERT THERMIST to be TRUE

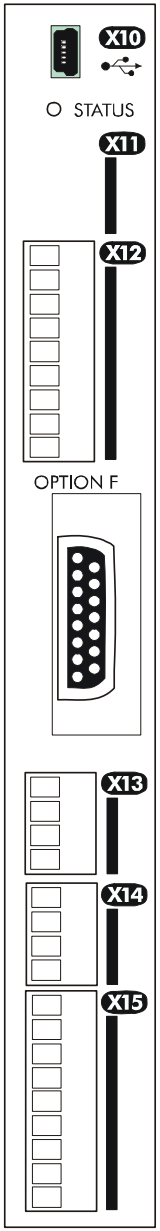

Control Connections - 890SD Standalone Drive

The table below shows the factory defaults.

Mini USB Port			
	Name	**Range**	**Description**
X10	USB		This Mini USB port provides a serial communications link to a host computer running the DSE 890 Configuration Tool. Use an approved USB lead: A to mini-B.

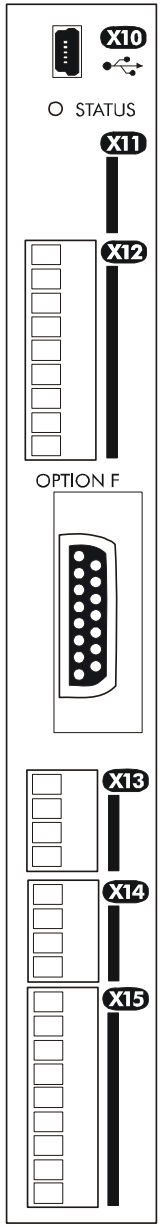

FUTURE USE				
		Name	Range	Description
X11	01			
	02			
	03			
	04			

Terminal X11 is for future use.

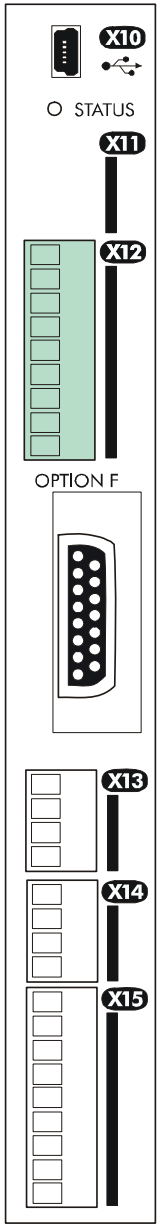

ANALOG I/O				
		Name	**Range**	**Description**
X12	**01**	0V		0V reference for analog I/O
	02	AIN1	0-10V, ±10V	Analog Input 1 (default = diff I/P +)
	03	AIN2	0-10V, ±10V	Analog Input 2 (default = diff I/P -)
	04	AIN3	±10V, 0-10V, 0-20mA, 4-20mA	Analog Input 3 (default = remote setpoint I/P) -10V = 100.00% reverse, +10V = 100.00% forward (% maximum speed)
	05	AIN4	±10V, 0-10V, 0-20mA, 4-20mA	Analog Input 4 (default = speed trim I/P)
	06	AOUT1	±10V (10V = 100% speed)	Analog Output 1 (default = speed feedback O/P)
	07	AOUT2	±10V (10V = 200% torque)	Analog Output 2 (default = torque feedback O/P)
	08	+10V REF	+10V (output)	10V reference for analog i/o. Load 10mA maximum
	09	–10V REF	-10V (output)	10V reference for analog i/o. Load 10mA maximum

Note ***AIN1 and AIN2 are fitted with a link to ensure no noise pick-up when not in use. These terminals can be used as a differential ±10V input (which we call AIN5), but AIN1 and AIN2 must remain within ±10V relative to 0V. AIN5 has a direct input into the Speed Loop providing a fast speed or torque demand for servos.***

All analog inputs/outputs are configurable using the DSE 890 (Drive System Explorer) Configuration Tool supplied on disk. The table above shows the factory defaults. These analog connections require ±10V DC which is supplied at terminal X12/08 and X12/09 respectively. For further information refer to the DSE 890 Configuration Tool.

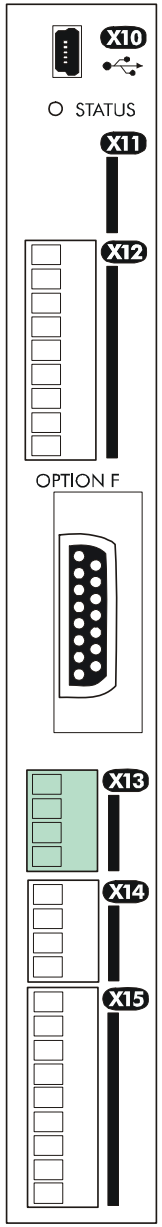

FUTURE USE				
		Name	Range	Description
X13	01			
	02			
	03			
	04			

Terminal X13 is for future use.

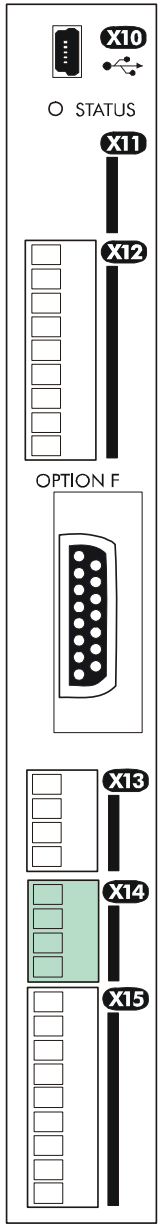

RELAY CONTACTS				
		Name	**Range**	**Description**
X14	**01**	DOUT3A	0-24V DC	Relay Output: normally-open, volt-free, 24V DC 1A resistive load or use down to 1mA, 12V levels (DOUT3 closed = HEALTH)
	02	DOUT3B	0-24V DC	Relay Output: normally-open, volt-free, 24V DC 1A resistive load or use down to 1mA, 12V levels (DOUT3 closed = HEALTH)
	03	USER 24V	0-24V DC	24V DC Output, 150mA maximum load
	04	0V	0-24V DC	0V reference for USER 24V output

Note ***The maximum permissible sum of currents from X14/03, X15/08, X15/09 is 150mA. An Alert message will be displayed if exceeded.***

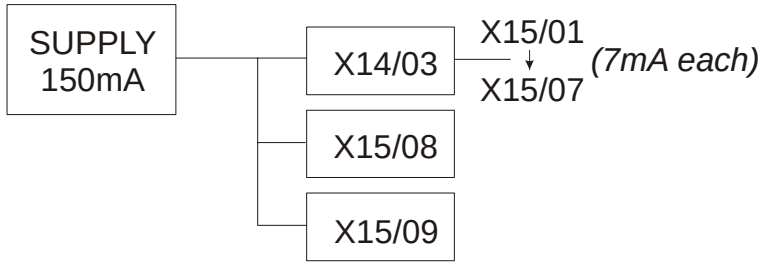

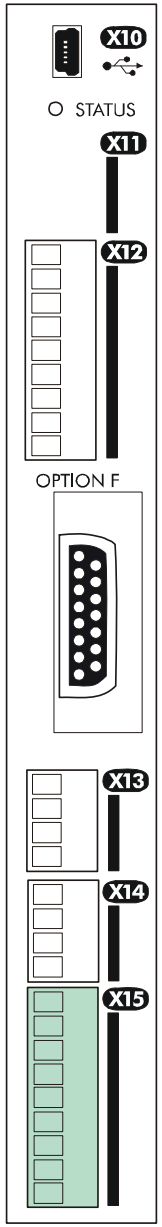

DIGITAL I/O				
		Name	**Range**	**Description**
X15	**01**	DIN1	0-24V DC	Digital Input 1 (default = JOG)
	02	DIN2	0-24V DC	Digital Input 2 - (default = RUN)
	03	DIN3	0-24V DC	Digital Input 3 - (default = STOP)
	04	DIN4	0-24V DC	Digital Input 4 - (default = REVERSE)
	05	DIN5	0-24V DC	Digital Input 5 - (default = unassigned). Refer to I/O TRIPS::EXT TRIP MODE for special function
	06	DIN6	0-24V DC	Digital Input 6 - (default = unassigned)
	07	DIN7	0-24V DC	Digital Input 7 - (default = unassigned)
	08	DIN8/DOUT1	0-24V DC	Digital Input/output 1 - (default = digital output: RUNNING)
	09	DIN9/DOUT2	0-24V DC	Digital Input/output 2 - (default = digital output: ZERO SPEED)

All digital inputs/outputs are configurable using the DSE 890 (Drive System Explorer) Configuration Tool supplied on disk. The table shows the factory defaults. The digital inputs require 24V DC which is supplied at terminal X14/03. For further information refer to the DSE 890 Configuration Tool.

Note ***The maximum permissible sum of currents from X14/03, X15/08, X15/09 is 150mA. The load on X15/08 & X15/09 connects from these pins to X14/04 (0V). An Alert message will be displayed if exceeded.***

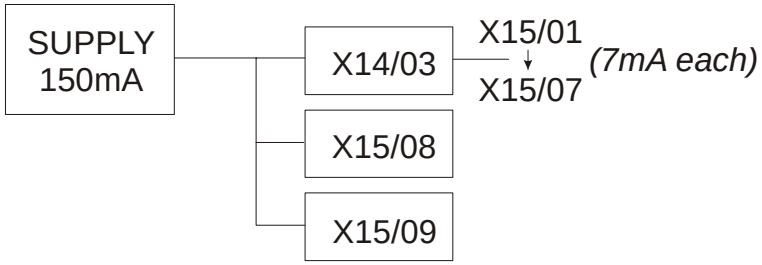

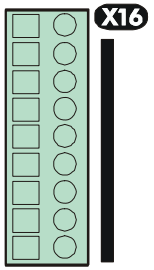

DIGITAL I/O				
		Name	**Range**	**Description**
X16	**01**	DOUT4A	open/closed	Normally-open relay contacts, A & B.
	02	DOUT4B	open/closed	Default function DOUT4 closed = healthy
	03	DOUT5A	open/closed	Normally-open relay contacts, A & B.
	04	DOUT5B	open/closed	Default function DOUT5 closed = running
	05	DOUT6A	open/closed	Normally-open relay contacts, A & B.
	06	DOUT6B	open/closed	No default function.
	07	NC		Not Connected - this terminal is unused
	08	MTR THRM A		Motor thermistor connection, or link to MTR THRM B
	09	MTR THRM B		Motor thermistor connection, or link to MTR THRM A

All digital inputs/outputs are configurable using the DSE 890 (Drive System Explorer) Configuration Tool supplied on disk. The table shows the factory defaults. The digital inputs require 24V DC which is supplied at terminal X14/03. For further information refer to the DSE 890 Configuration Tool.

Relay outputs are volt-free, normally open contacts. Rated to 240V 3A resistive load. Alternatively they may be used down to 1mA, 12V levels.

Step 4: Powering-up the Unit

Main Points

1. Complete all Pre-Operation Checks.
2. Ensure all the set-up parameter values for each 890SD Standalone Drive have been entered. Refer to "Set-up Parameters page 4-43.
3. Autotune each drive where necessary.
4. Save your Application.
5. Follow one of the Start-up Routines: Local Mode or Remote Mode.

Pre-Operation Checks

Before Applying Power:

- Read the Safety section at the front of the Manual.
- Ensure that all local electric codes are met.
- Check for damage to equipment.
- Check for loose ends, clippings, drilling swarf etc. lodged in the drive and system.
- Check all external wiring circuits of the system - power, control, motor and earth connections.
- Ensure that unexpected rotation of the motor in either direction will not result in damage, bodily harm or injury. Disconnect the load from the motor shaft, if possible.
- Check the state of the Motor Thermistor and Brake Resistor connectors. Check external run contacts are open. Check external speed setpoints are all at zero.
- Ensure that nobody is working on another part of the system which will be affected by powering up.
- Ensure that other equipment will not be adversely affected by powering up.
- Check motor stator connections are correctly wired for Star or Delta as necessary for drive output voltage.

4.1: Apply the 3-Phase Supply

1. **Apply the 3-phase supply to the 890SD Standalone Drive.**
2. Select LOCAL mode operation:
   - The Keypad will display the Remote Setpoint parameter (%).

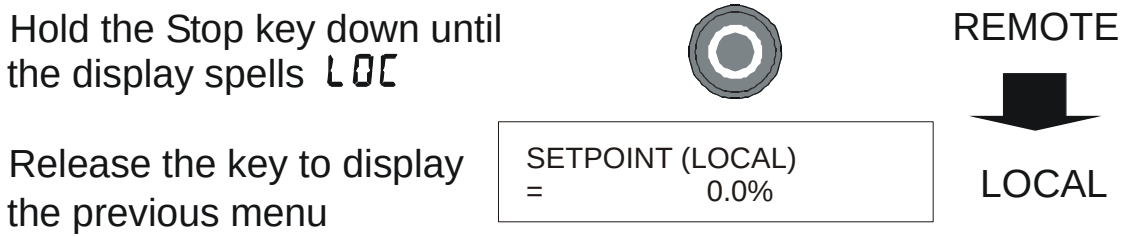

3. **You MUST carry out an Autotune** if you intend to use the drive in Sensorless Vector Fluxing Mode or Closed-Loop Vector Mode - go to page 4-53. If you are using the drive in Volts/Hz Mode (Open-Loop Drive) an Autotune is not necessary - go to page 4-58.

4.2: Configure the 890SD Standalone Drive

You must now configure each 890SD Standalone Drive to your application. This is done using the DSE 890 Configuration Tool supplied on the CD, or the keypad.

Using the DSE 890 Configuration Tool

The DSE 890 (Drive System Explorer) Configuration Tool has a full Help system. Insert the DSE 890 disk into your PC and follow the on-screen instructions. Use the tool to set-up the I/O connectivity so that it meets the requirements for each 890SD Standalone Drive. When connected, enter the set-up parameters as discussed on page 5-43.

Connecting to a PC

Connect the 890SD Standalone Drive to your PC using an approved mini-USB lead. You can order this lead from Parker SSD Drives: part number CM471050 (3m long) or CM465778 (1m long).

Using the Keypad

Fit the keypad to the front of the unit, or connect remotely. The set-up parameters are stored in QUICK SETUP menu on the 6901 keypad.

6901 Keypad

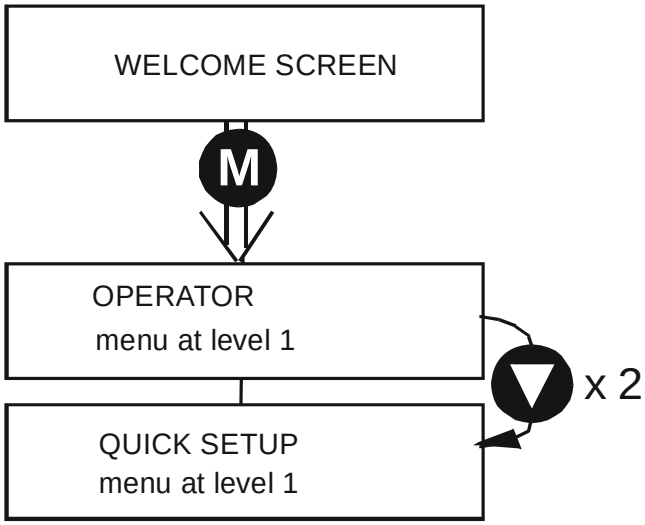

How to Edit a Parameter

Press M to enter the QUICK SETUP menu.

Scroll through the parameters using the ▲ and ▼ keys.

Press M to select a parameter for editing.

Increment/decrement the parameter value using the ▲ and ▼ keys.

Press E to exit the parameter.

Set-up Parameters

The drive has several control modes:

Control Modes		
V/Hz	VOLTS / HZ	Set-up as an Open-Loop Drive (V/F Fluxing) - *low performance applications (fan, pump). Simplest method involving no speed feedback and no compensation for load changes.* ***Autotune is not required***.
SV	SENSORLESS VEC	Set-up using the Sensorless Vector Fluxing Mode - *medium performance applications where the drive uses an electrical model of the motor to automatically compensate for load changes.* The drive must be tuned to the motor in use by matching the motor parameters in the drive to those of the motor being controlled. **You MUST use the Autotune feature after entering your parameter values.**
CLV	CLOSED-LOOP VEC	Set-up using the Closed-Loop Vector Mode - *high performance applications where the drive uses external sensors (encoders) to automatically compensate for load changes.* In this mode, speed feedback signals from the motor shaft encoder are processed to determine the rotational speed of the shaft. A PI algorithm within the software uses this information to produce varying gate drive signals to the drive circuits. These signals cause the drive to output the required voltage and frequency for a particular motor speed. **You MUST use the Autotune feature after entering your parameter values.**

Control Modes		
4-Q	4-Q REGEN	Set-up using 4Q Regen Active Front End (AFE) control mode. Refer to Chapter 7 to correctly set-up the drive for an 890CD/SD 4-Q Regen AFE Application. Autotune is not required.
PMAC	PMAC	Set-up using PMAC (Permanent Magnet AC) servo or torque motor control mode - *a high performance application where the drive uses Resolver or Sin/Cos Encoder motor feedback.* In this mode, speed feedback signals from the motor shaft encoder are processed to determine the rotational speed of the shaft. A PI algorithm within the software uses this information to produce varying gate drive signals to the drive circuits. These signals cause the drive to output the required voltage and frequency for a particular motor speed. Autotune is not required. The Motor Selection Wizard in the 890 DSE Configuration Tool **MUST** be used to correctly set-up the motor and feedback device parameters. Failure to do so may result in damage to the servo motor.

The following is a list of the Set-up parameters you may need to check before starting the drive. Set only the ones marked with "x" for the intended mode of operation.

Note ***Parameters whose values are "product code dependent" will have a typical value for the size of unit. Where possible (or required), enter an application-specific value for improved performance, otherwise use the typical value.***

Note ***"PREF" is a parameter reference number used by the DSE 890 Configuration Tool.***

SET-UP PARAMETERS								
PREF	6511/6901 Display	Default	Brief Description	V/Hz	SV	CLV	4-Q	PMAC
136.02	5 1 CONTROL MODE	0 : VOLTS / HZ 1 : SENSORLESS VEC 2 : CLOSED-LOOP VEC 3 : 4-Q REGEN 4 : PMAC*	Select the operating mode for the drive. * If PMAC control is required, the motor wizard feature in the 890 DSE Configuration Tool MUST be used to correctly set-up the motor and feedback device parameters. Failure to do so may result in damage to the servo motor.	x (0)	x (1)	x (2)	x (3)	x (4)

SET-UP PARAMETERS								
PREF	6511/6901 Display	Default	Brief Description	V/Hz	SV	CLV	4-Q	PMAC
101.08	5 2 MAX SPEED	product code dependent	The maximum speed clamp and scale factor for other speed parameters (at full process speed)	x	x	x		x
100.02	5 3 RAMP ACCEL TIME	10.0 s	Acceleration time from 0 rpm to MAX SPEED	x	x	x	x	x
100.03	5 4 RAMP DECEL TIME	10.0 s	Deceleration time from MAX SPEED to 0 rpm	x	x	x	x	x
102.01	5 5 RUN STOP MODE	0 : RUN RAMP 1 : COAST 2 : DC INJECTION 3 : STOP RAMP	Selects the stopping mode used by the drive	x	x	x	x	x
103.01	5 6 JOG SETPOINT	10.0 %	Drive speed setpoint whilst jogging (percentage of MAX SPEED)	x	x	x	x	x

SET-UP PARAMETERS

PREF	6511/6901 Display	Default	Brief Description	V/Hz	SV	CLV	4-Q	PMAC
21.01	5 7 V/F SHAPE	0 : LINEAR LAW 1 : FAN LAW 2 : USER DEFINED	Sets the type of volts to frequency template that is used to flux the motor	x				
70.01	5 8 QUADRATIC TORQUE	0 : FALSE 1 : TRUE	0 : FALSE = Constant Selects between Constant or Quadratic mode of operation	x	x	x		x
27.05	5 9 MOTOR CURRENT	product code dependent	Enter the motor full load current from the motor nameplate	x	x	x	x	
21.03	5 10 FIXED BOOST	product code dependent	Boosts starting torque by adding volts at low speed	x				
82.01	5 11 CURRENT LIMIT	150.00%	Level of motor current as % of FULL LOAD CALIB	x	x	x	x	
81.01	5 12 VOLTAGE MODE	None	Defines how volts Hz characteristic varies in response to changes in DC link voltage.	x	x	x	x	

SET-UP PARAMETERS								
PREF	6511/6901 Display	Default	Brief Description	V/Hz	SV	CLV	4-Q	PMAC
27.02	5 13 POWER	product code dependent	Nameplate induction motor power	x	x	x		
27.03	5 14 MOTOR BASE FREQUENCY	product code dependent	Enter the motor nameplate base frequency	x	x	x		
27.04	5 15 MOTOR VOLTAGE	product code dependent	Enter the motor nameplate voltage at base frequency	x	x	x		
27.07	5 16 NAMEPLATE RPM	product code dependent	Enter the motor nameplate full-load rated speed. This is the motor speed in rpm at base frequency minus full load slip.	x	x	x		
27.09	5 17 MOTOR POLES	product code dependent 0 : 2 pole 1 : 4 pole 2 : 6 pole 3 : 8 pole 4 : 10 pole 5 : 12 pole	Enter the number of motor poles from the motor nameplate	x	x	x		

SET-UP PARAMETERS

PREF	6511/6901 Display	Default	Brief Description	V/Hz	SV	CLV	4-Q	PMAC
27.08	S 18 MOTOR CONNECTION	product code dependent 0 : DELTA 1 : STAR	Enter the type of motor connection		x	x		
71.01	S 19 PULSE ENC VOLTS	product code dependent	Set between 10-20V to match the encoder supply voltage			x		
71.02	S 20 ENCODER LINES	product code dependent	Set to the number of lines used by the encoder			x		
71.03	S 21 ENCODER INVERT	0 : FALSE 1 : TRUE Rotating Autotune sets actual value	Encoder direction :- when TRUE, changes the sign of the measured speed and the direction of the position count.			x		
80.01	S 22 AUTOTUNE ENABLE	0 : FALSE 1 : TRUE	Set TRUE to enable Autotune. Resets to FALSE when complete.	x				

SET-UP PARAMETERS								
PREF	6511/6901 Display	Default	Brief Description	V/Hz	SV	CLV	4-Q	PMAC
80.02	5 23 AUTOTUNE MODE	0 : ROTATING 1 : STATIONARY 2 : SPD LOOP ROTATING 3 : SPD LOOP STATIONARY	Set the type of Autotune.		x	x		
27.06	5 24 MAG CURRENT	product code dependent Rotating Autotune sets actual value	Enter the No-Load Amps from the motor nameplate	x	x	x		
27.14	5 25 STATOR RES	product code dependent Autotune sets actual value	Motor per-phase stator resistance		x	x		
27.15	5 26 LEAKAGE INDUC	product code dependent Autotune sets actual value	Motor per-phase stator leakage inductance		x	x		
27.16	5 27 MUTUAL INDUC	product code dependent Autotune sets actual value	Motor per-phase stator mutual (magnetising) inductance		x	x		

SET-UP PARAMETERS

PREF	6511/6901 Display	Default	Brief Description	V/Hz	SV	CLV	4-Q	PMAC
27.17	S 28 ROTOR TIME CONST	product code dependent Autotune sets actual value	The motor model rotor time constant as determined by Autotune		x	x		
78.01	S 29 SPEED PROP GAIN	20.0	Sets the proportional gain of the loop		x	x		x
78.02	S 30 SPEED INT TIME	100 ms	The integral time constant of the speed loop		x	x		x
1.03	S 31 A1N1 TYPE	0 : -10..+10 V 1 : 0..+10 V	Select the input range and type	x	x	x	x	x
2.03	S 32 AIN2 TYPE	0 : -10..+10 V 1 : 0..+10 V	Select the input range and type	x	x	x	x	x
3.03	S 33 AIN3 TYPE	0 : -10..+10 V 1 : 0..+10 V 2 : 0..20 mA 3 : 4..20 mA	Select the input range and type	x	x	x	x	x

SET-UP PARAMETERS								
PREF	6511/6901 Display	Default	Brief Description	V/Hz	SV	CLV	4-Q	PMAC
4.03	S 34 AIN4 TYPE	0 : -10..+10 V 1 : 0..+10 V 2 : 0..20 mA 3 : 4..20 mA	Select the input range and type	x	x	x	x	x
97.01	S 35 DISABLED WORD 1	0700 >>	Indicates which trips have been disabled - refer to Chapter 9	x	x	x	x	x
97.02	S 36 DISABLED WORD 2	0840 >>	Indicates which trips have been disabled - refer to Chapter 9	x	x	x	x	x
31.01	S 37 VIEW LEVEL	0 : BASIC 1 : OPERATOR 2 : ADVANCED	Selects full menu for MMI display	x	x	x	x	x

Step 5: Run the Motor

WARNING
Remove the fuses (or trip the circuit breaker) on your 3-phase supply.
Make sure the power is OFF, and that it cannot be switched on accidentally whilst you are working.

The Autotune Feature

Note ***The drive will not perform an Autotune when in Volts/Hz Mode (Open-Loop Drive.) An Autotune is not necessary in this control mode.***

The Autotune feature identifies motor characteristics to allow the drive to control the motor.
It loads the values into the parameters below, which are in the QUICK SETUP menu.

PREF	Parameter	Description	Note
71.03	ENCODER INVERT	Encoder direction	Parameter is only set up if drive is configured to run as Closed-loop Vector Not measured by Stationary Autotune
27.06	MAG CURRENT	Magnetising current	Not measured by Stationary Autotune
27.14	STATOR RES	Per phase stator resistance	
27.15	LEAKAGE INDUC	Per phase stator leakage inductance	
27.16	MUTUAL INDUC	Per phase mutual inductance	
27.17	ROTOR TIME CONST	Rotor time constant	This is identified from magnetising current and motor nameplate rpm

For further information on the functions of all parameters, refer to Appendix D: "Programming".

Stationary or Rotating Autotune?

Will the motor spin freely, i.e. not connected to a load, during the Autotune?

- If it can spin freely, use a Rotating Autotune (preferred)
- If it cannot spin freely, use a Stationary Autotune

	Action	Requirements
Rotating Autotune ***Preferred method***	Spins the motor up to the maximum speed set by the user to identify all necessary motor characteristics	Motor must spin freely during Autotune
Stationary Autotune *Only used when the motor cannot spin freely during the Autotune feature*	Motor does not spin during Autotune. A limited set of motor characteristics are identified	You must enter the correct value of magnetising current Do not subsequently operate the drive above base speed In Closed-loop Vector Mode set up the encoder direction parameter

Necessary Data

You **MUST** enter values for the following parameters, found in the QUICK SETUP menu, before an Autotune can be carried out:

MOTOR CURRENT
MOTOR BASE FREQ
MOTOR VOLTAGE (maximum motor output voltage)
NAMEPLATE RPM (motor nameplate speed)
MOTOR POLES (the number of motor poles)
ENCODER LINES (if an encoder is fitted, enter the number of lines used by the encoder)

Performing a Rotating Autotune

Note ***The drive will not perform an Autotune when in Volts/Hz Mode (Open-Loop Drive.) An Autotune is not necessary in this control mode.***

Check that the motor can rotate freely in the forward direction. Ensure also that the motor is unloaded. Ideally, the motor shaft should be disconnected. If the motor is connected to a gearbox this is okay, provided that there is nothing on the output of the gearbox which could load the motor.

1. In the QUICK SETUP menu, set MAX SPEED to the maximum speed at which you will operate the drive in normal operation. The Autotune will characterise the motor up to 30% above this speed. If you later wish to run faster than this, you will need to carry out another Autotune.

2. Set AUTOTUNE ENABLE to TRUE, and start the drive. The drive will carry out a Rotating Autotune (indicated by the Run and Stop led's flashing. This may take several minutes, during which the motor will be accelerated to maximum speed and then brought to a stop. When complete, the drive is returned to the stopped condition and the AUTOTUNE ENABLE parameter is reset to FALSE. In Closed-loop Vector mode (with an encoder) the encoder sign has been adjusted by the Autotune feature.

IMPORTANT **Now perform a SAVE CONFIG to save your new settings. Refer to Chapter 7: "The Keypad" - SAVE CONFIG.**

Performing a Stationary Autotune

Note ***The drive will not perform an Autotune when in Volts/Hz Mode (Open-Loop Drive.) An Autotune is not necessary in this control mode.***

Before starting the stationary Autotune, you **MUST** enter the value of magnetising current for the motor. This may be available on the motor nameplate. If not, you may need to contact the motor supplier.

1. In the QUICK SETUP menu, set the AUTOTUNE MODE parameter to STATIONARY (0).
2. Set ENABLE to TRUE, and start the drive . The drive will carry out a stationary Autotune, injecting current into the motor but not turning the shaft. The Run and Stop led's will flash. When complete, the drive is returned to the stopped condition and the AUTOTUNE ENABLE parameter is reset to FALSE.

IMPORTANT **Now perform a SAVE CONFIG to save your new settings. Refer to Chapter 7: "The Keypad" - SAVE CONFIG.**

- If the drive is configured to run in Sensorless Vector mode, set-up is complete.
- If the drive is configured to run in Closed-loop Vector mode, i.e. using an encoder, then the encoder direction must be set up. Refer to "Setting the Encoder Sign" below.

Setting the Encoder Sign (Closed-Loop Vector Mode)

If you have performed a Stationary Autotune in Closed-loop Vector mode, you should check the encoder direction as follows:

Look and listen to the motion of the motor when the drive is running at a speed demand of between 5 - 10%.

As a test, use the **Up** (▲) control key to increase the speed to about double the original figure. Change the direction of rotation using the **FWD/REV** control key.

If ENCODER INVERT is correct, the motor will rotate smoothly and will respond to the changes in speed demand and direction.

If ENCODER INVERT is incorrect, the motor will rotate in a jerky and/or noisy manner. Alternatively, it may rotate smoothly at a very low speed but not respond to changes in speed demand or direction.

- Change the setting of ENCODER INVERT to change the encoder sign.
- Change the direction of rotation back to the original direction. Re-set the speed demand.

The encoder sign is now correct for the original motor direction.

If however the direction of the motor is incorrect at this point, then power down the entire drive, wait for 3 minutes (for the dc link capacitors to discharge) and then swap the motor drive cables M1/U and M2/V. Change the setting of ENCODER INVERT.

The encoder sign is now correct for the new motor direction.

IMPORTANT **Now perform a SAVE CONFIG to save your new settings. Refer to Chapter 7: “The Keypad” - SAVE CONFIG.**

Initial Start-Up Routines

WARNING

Unpredictable motion, especially if motor parameters are incorrect.

Ensure no personnel are in the vicinity of the motor or any connected machinery.

Ensure that no machinery connected to the motor will be damaged by unpredictable motion.

Ensure that the emergency stop circuits function correctly before running the motor for the first time.

The Routines 1 & 2 below will run the drive in the default V/F fluxing control mode (VOLTS / HZ) to begin with using either the Keypad or the Control Terminals.

Routine 1: Local Mode

Note ***Refer to Chapter 7: "The Keypad" to familiarise yourself with the keypad and menu structure.***

Local control has a use for commissioning a drive. It is not the expected way to operate a system drive.

On the 890SD Standalone Drive's keypad:

1. Select Local Mode (refer to Chapter 7: "The Keypad" for details).
2. The drive should be "healthy" now it is powered-up: no flashing trip messages displayed, and the 6901 keypad's HEALTH LED is lit (the RUN LED remains off). The keypad will display the Remote Setpoint parameter.
   If the drive has tripped, the keypad will be flashing a trip message, and the 6901 keypad's HEALTH LED will flash. Refer to Chapter 9: "Trips and Fault Finding" to investigate and remove the cause of the trip.

3. Press the Start key . The 6901 keypad's RUN LED will light and the motor will rotate slowly (the RUN LED will flash if the setpoint is at zero).

   *Reverse the motor's direction of rotation either by pressing the FORWARD/REVERSE key on the 6901 keypad, or by swapping two of the motor phases (**WARNING: Disconnect the mains supply first**).*

4. Control the value of the Local Setpoint parameter using the keys.

5. Press the Stop key .

6901 Keypad

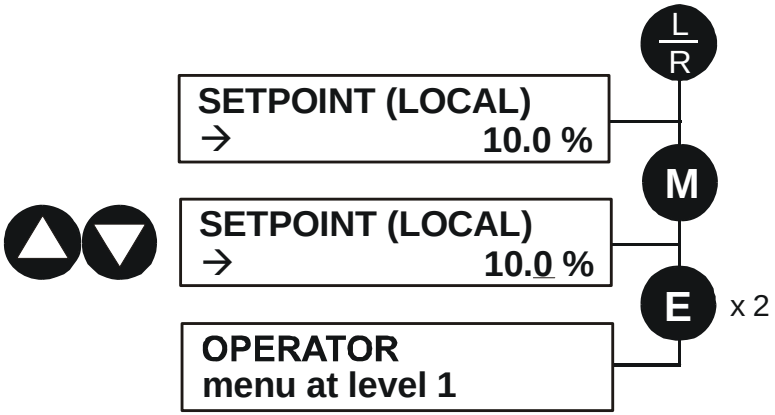

Routine 2: Remote Mode

This routine assumes that the drive's control terminals are wired as shown in "Control Connection Diagram" on page 5-29.

IMPORTANT **Ensure that the speed potentiometer is set to zero.**

On the 890SD Standalone Drive:

1. The drive should be "healthy" now it is powered-up: no flashing trip messages displayed, and the 6901 keypad's HEALTH LED is lit (the RUN LED remains off).
   If the drive has tripped, the keypad will be flashing a trip message, and the 6901 keypad's HEALTH LED will flash. Refer to Chapter 9: "Trips and Fault Finding" to investigate and remove the cause of the trip.
2. Select Remote Mode - refer to Chapter 7: "The Keypad" for details, or power-down and power up the unit to re-initialise in Remote mode.
3. To Start in Remote Mode, close the "Run" switch on your control panel (applying 24V to DIN2, terminal X15/02 - RUN).
4. Turn the speed potentiometer up a little to apply a small speed setpoint (applying a variable voltage to AIN3, terminal X12/04 - REMOTE SETPOINT). The 6901 keypad's RUN LED will light and the motor will rotate slowly (the RUN LED will flash if the setpoint is at zero).
   *Reverse the motor's direction of rotation either by pressing the FORWARD/REVERSE key on the 6901 keypad, or by swapping two of the motor phases (**WARNING: Disconnect the mains supply first**).*
5. To Stop in Remote Mode, open the "Run" switch on your control panel (removing 24V from DIN2, terminal X15/02 - RUN).

Reading the Status LEDs

The HEALTH and RUN LEDs indicate status. The LEDs are considered to operate in five different ways:

HEALTH	RUN	Drive State
○●	○●	Re-configuration, or corrupted non-volatile memory at power-up
○▬	○	Tripped
○▬	○●	Auto Restarting, waiting for trip cause to clear
○▬	○▬	Auto Restarting, timing
▬	○	Stopped
▬	▬○	Running with zero reference, enable false or contactor feedback false
▬	▬	Running
▬	○▬	Stopping
▬○	▬○	Braking and running with zero speed demand
▬○	▬	Braking and running
▬○	○▬	Braking and stopping

Table 4-1 Status indications given by the Blank Cover Health and Run LEDs

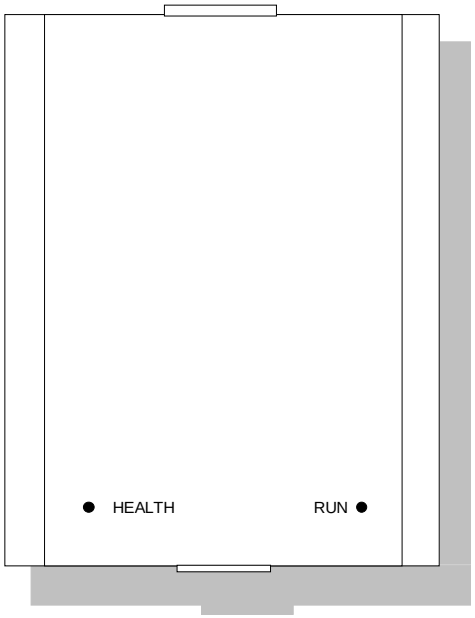

Figure 4-1 Blank Cover showing LED Operation

○ OFF
○● SHORT FLASH
○▬ EQUAL FLASH
▬○ LONG FLASH
▬ ON

Installation Drawings

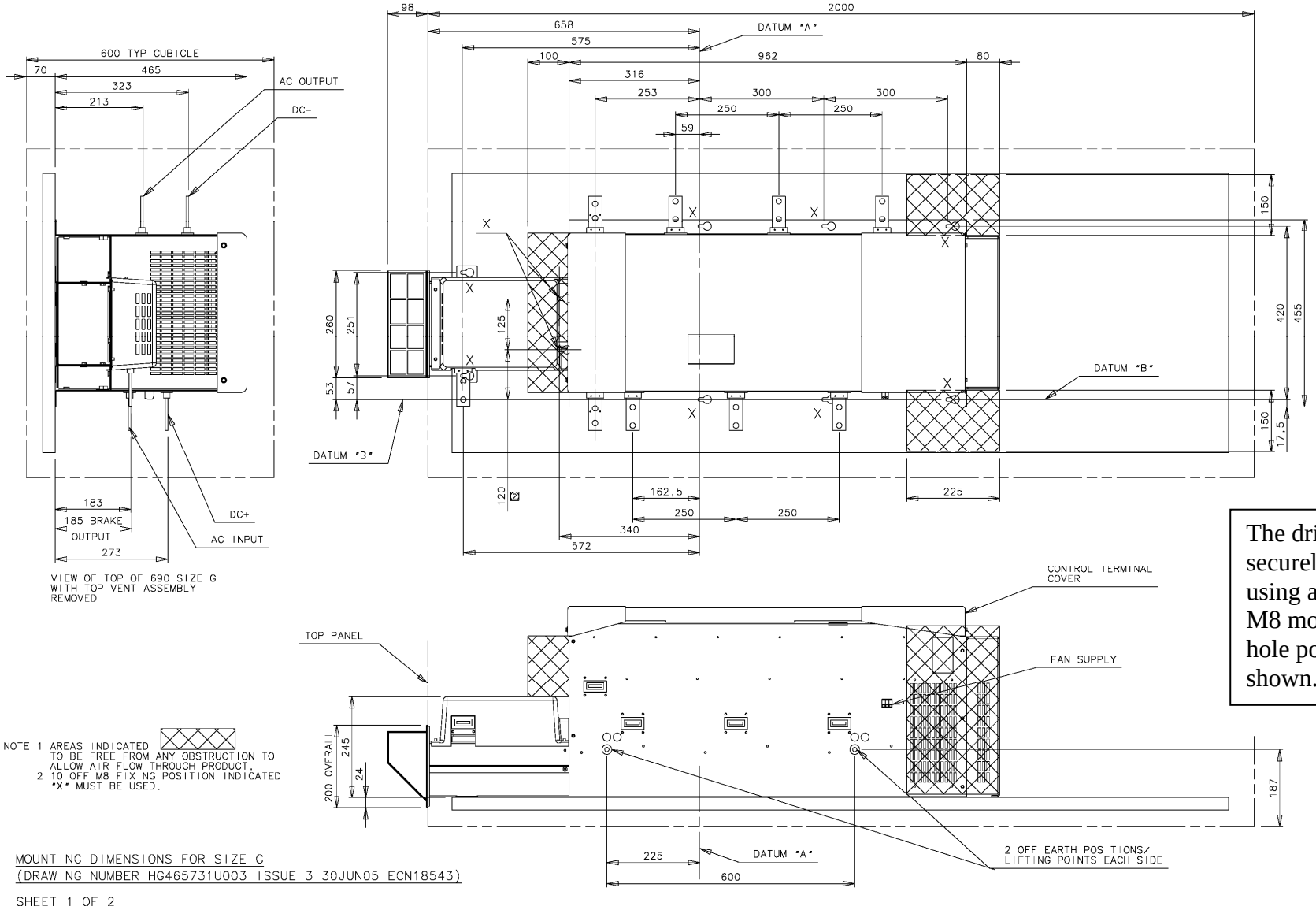

The drive must be securely mounted using all 10 off M8 mounting hole positions as shown.

Frame G Typical Cubicle Installation Outline Drawing (HG465731U003 Sheet 1)

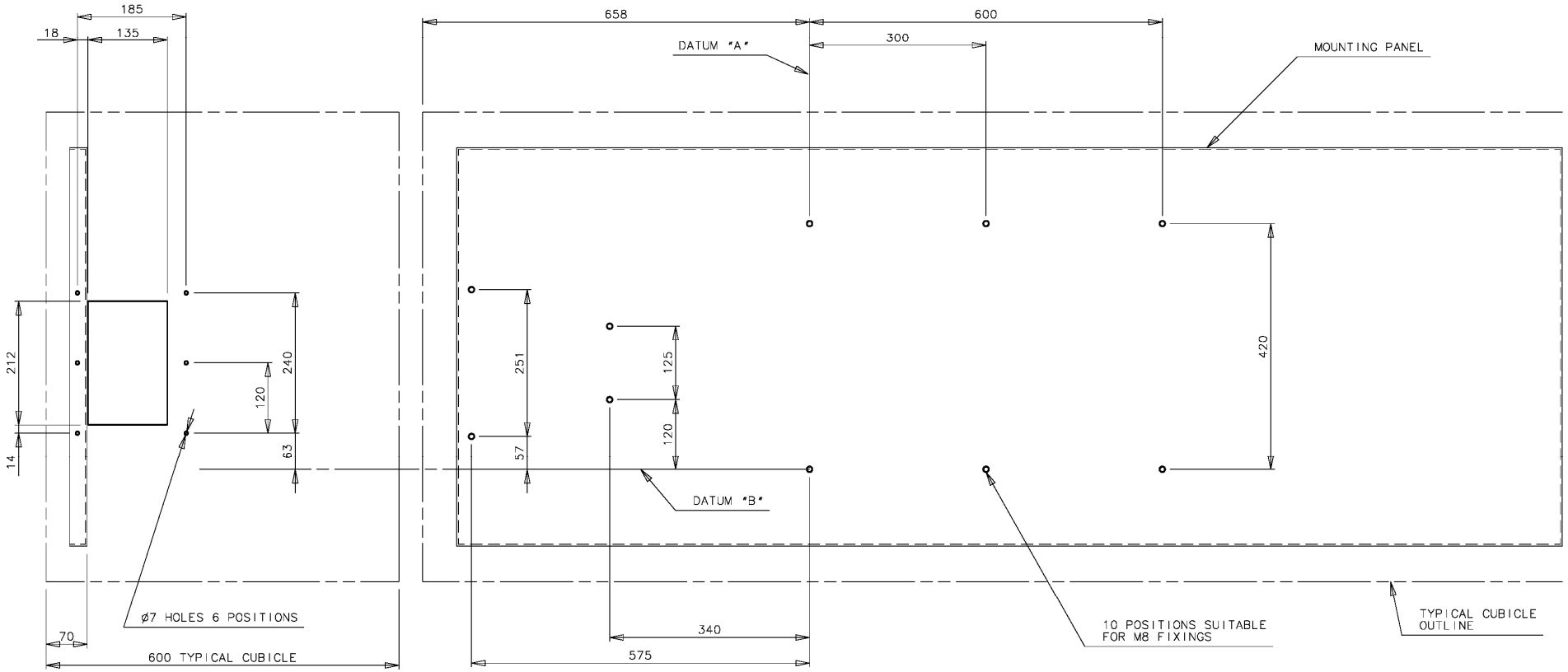

TYPICAL CUBICLE DETAIL SHOWING TOP PANEL AND
MOUNTING PLATE HOLE POSITIONS FOR SIZE G

MOUNTING DIMENSIONS FOR SIZE G
(DRAWING NUMBER HG465731U003 ISSUE 3 30JUN05 ECN18543)

SHEET 2 OF 2

Frame G Typical Cubicle Installation Outline Drawing (HG465731U003 Sheet 2)

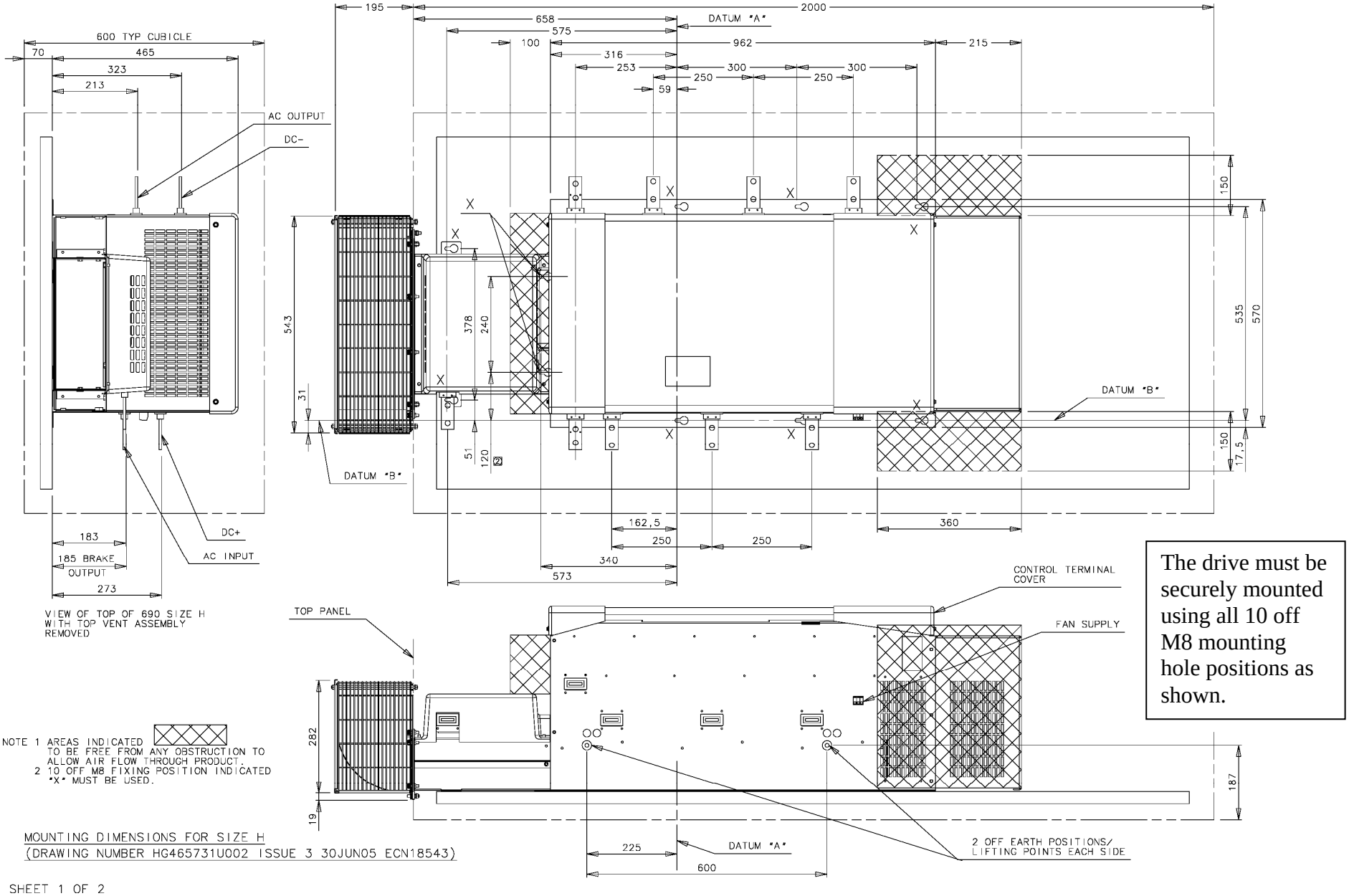

The drive must be securely mounted using all 10 off M8 mounting hole positions as shown.

Frame H Typical Cubicle Installation Outline Drawing (HG465731U002 Sheet 1)

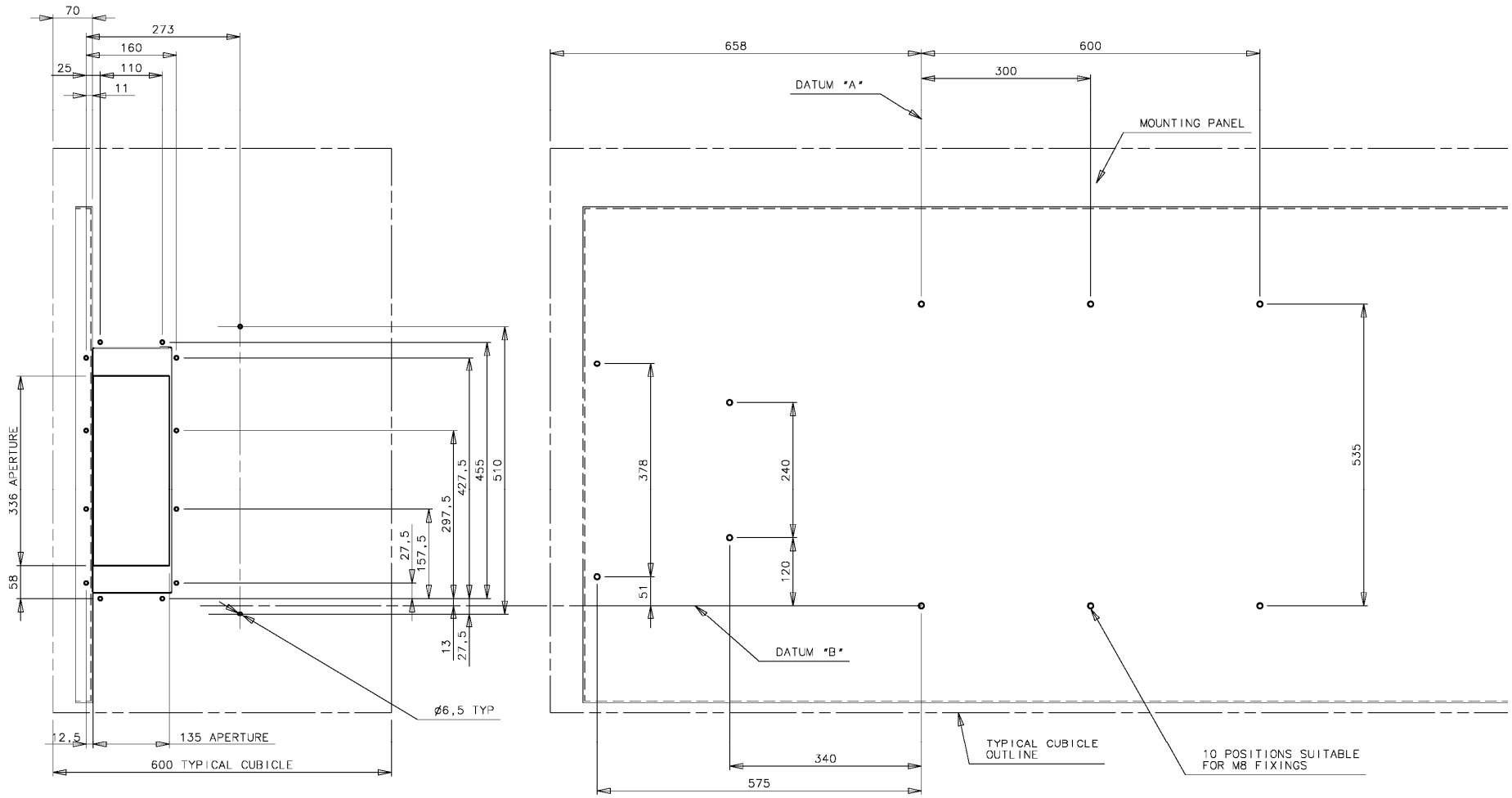

TYPICAL CUBICLE DETAIL SHOWING TOP PANEL AND MOUNTING PLATE HOLE POSITIONS FOR SIZE H

MOUNTING DIMENSIONS FOR SIZE H
(DRAWING NUMBER HG465731U002 ISSUE 3 30JUN05 ECN18543)

SHEET 2 OF 2

Frame H Typical Cubicle Installation Outline Drawing (HG465731U002 Sheet 2)

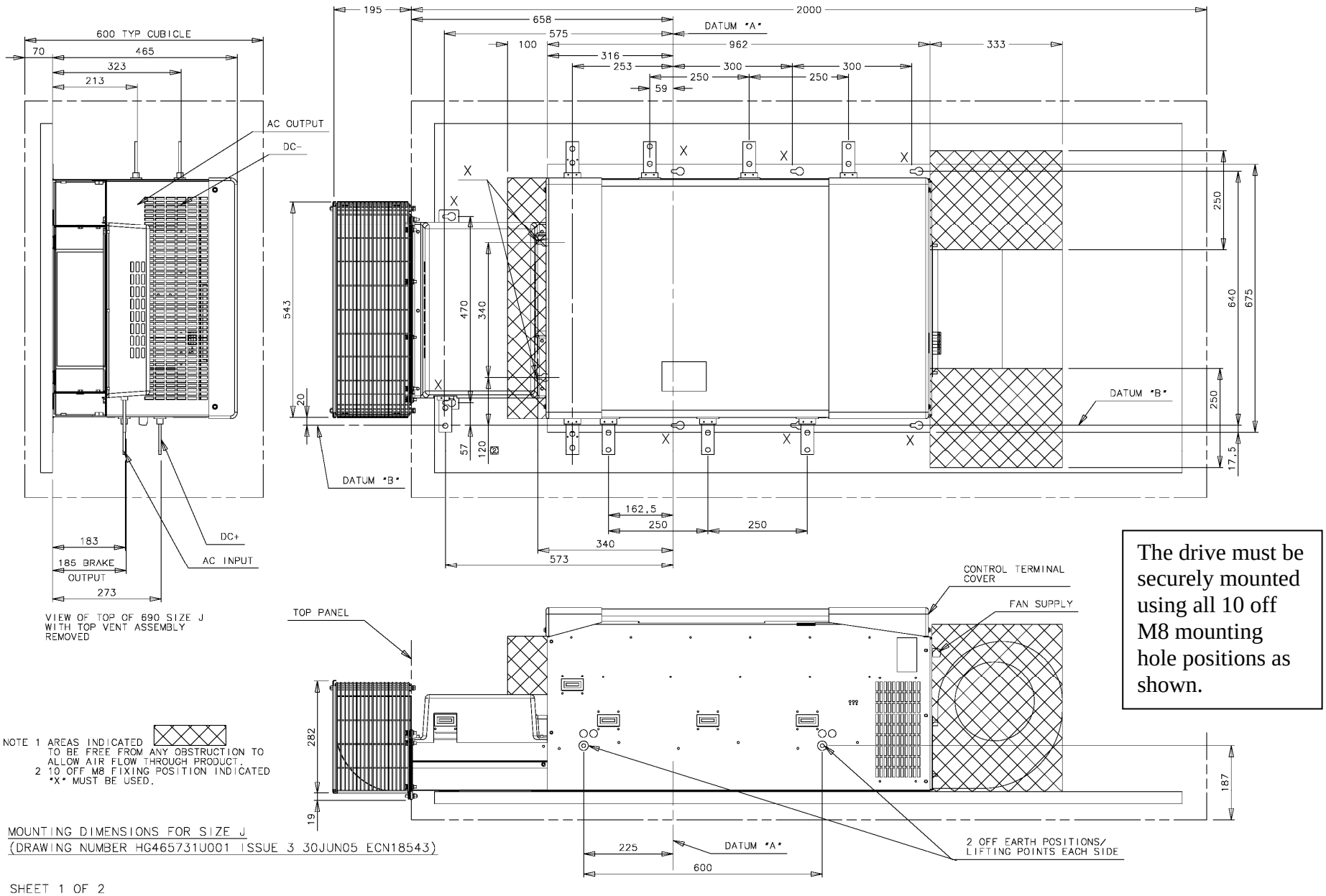

The drive must be securely mounted using all 10 off M8 mounting hole positions as shown.

Frame H Typical Cubicle Installation Outline Drawing (HG465731U001 Sheet 1)

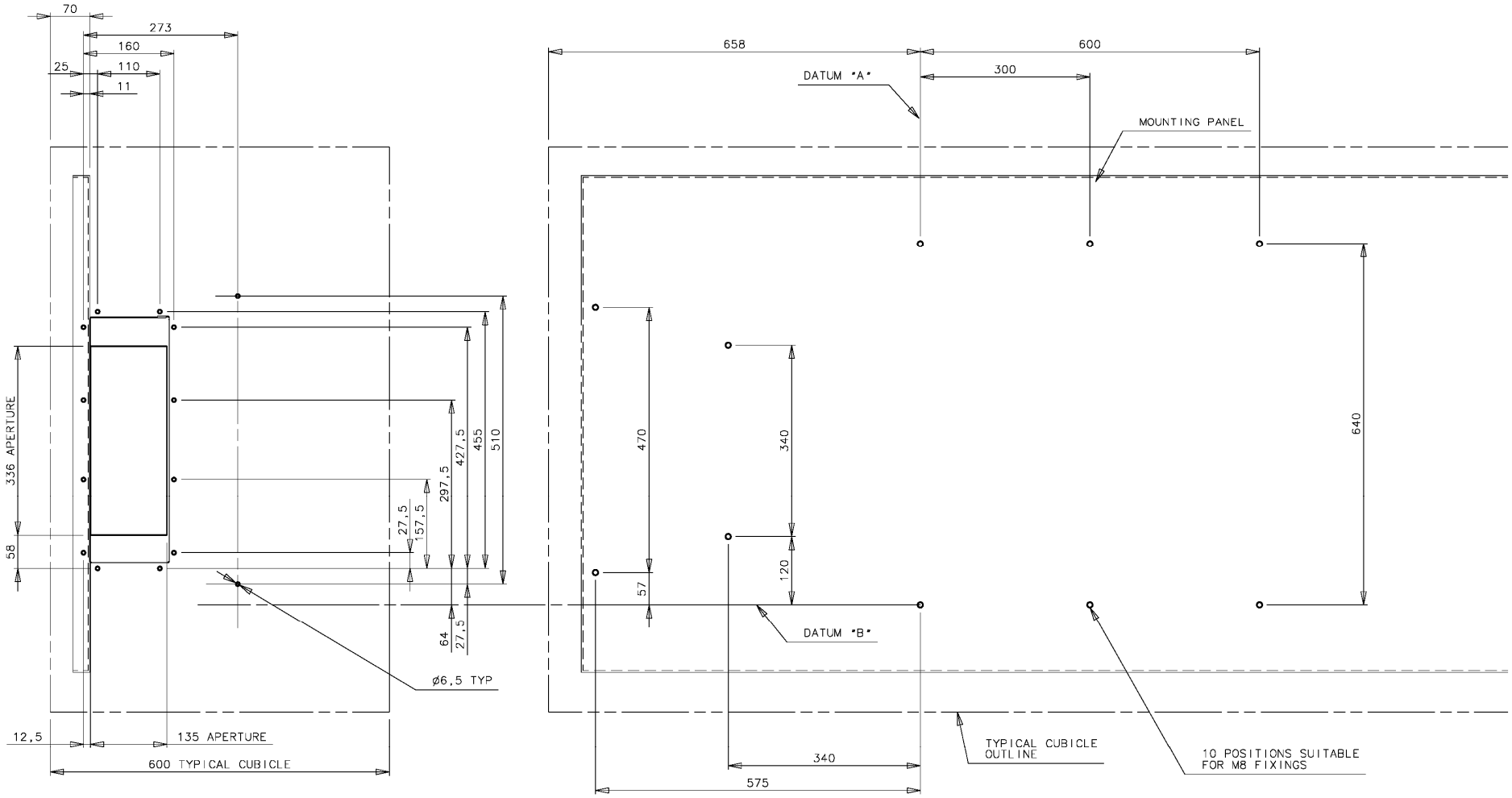

TYPICAL CUBICLE DETAIL SHOWING TOP PANEL AND MOUNTING PLATE HOLE POSITIONS FOR SIZE J

MOUNTING DIMENSIONS FOR SIZE J
(DRAWING NUMBER HG465731U001 ISSUE 3 30JUN05 ECN18543)

SHEET 2 OF 2

Frame H Typical Cubicle Installation Outline Drawing (HG465731U001 Sheet 2)

Chapter 5
Associated Equipment

Details for all the ancilliary parts of a system that can be used with the 890.

- Main Points
- External Braking Resistors
- Drive Brake Unit
- 890SD Semiconductor Protection Fuses
- Circuit Breakers
- Filters

Main Points

Connect the associated equipment in the following order:

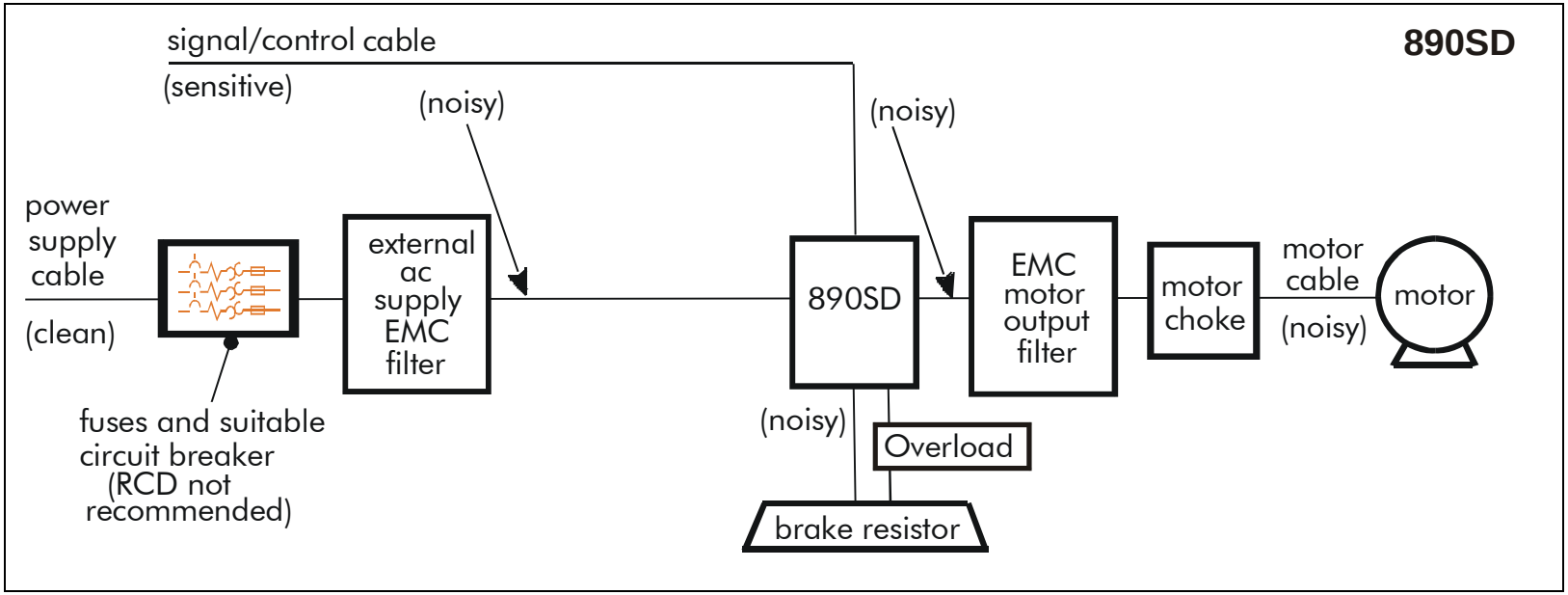

External Braking Resistors

Use the calculation on page 5-4 to help you select suitable resistors.

Main Points

- **The 890SD unit must be fitted with external braking resistors if braking is required.** Use the DSE 890 Configuration Tool to set the following parameters in the 890SD unit:

  Set the INT DB RESISTOR parameter (PREF 31.75 in the DYNAMIC BRAKING function block) to FALSE. Also enter information about the external resistor being used in to this function block.

  Enable the "Brake Resistor" and "Brake Switch" trips in the TRIPS STATUS function block (DISABLED WORD 1 parameter).

IMPORTANT **The continuous rating quoted is not to be exceeded under repetitive loading.**

Calculation

Brake resistor assemblies must be rated to absorb both peak braking power during deceleration and the average power over the complete cycle.

Peak braking power $P_{pk} = \dfrac{0.0055 \times J \times (n_1^2 - n_2^2)}{t_b}$ (W)

Average braking power $P_{av} = \dfrac{P_{pk}}{t_c} \times t_b$

J - total inertia (kgm^2)
n_1 - initial speed (rpm)
n_2 - final speed (rpm)
t_b - braking time (s)
t_c - cycle time (s)

Obtain information on the peak power rating and the average power rating of the resistors from the resistor manufacturer. If this information is not available, a large safety margin must be incorporated to ensure that the resistors are not overloaded.

By connecting these resistors in series and in parallel the braking capacity can be selected for the application.

IMPORTANT **The minimum resistance of the combination and maximum dc link voltage must be as specified in Appendix E: “Technical Specifications” - Internal Dynamic Brake Switch.**

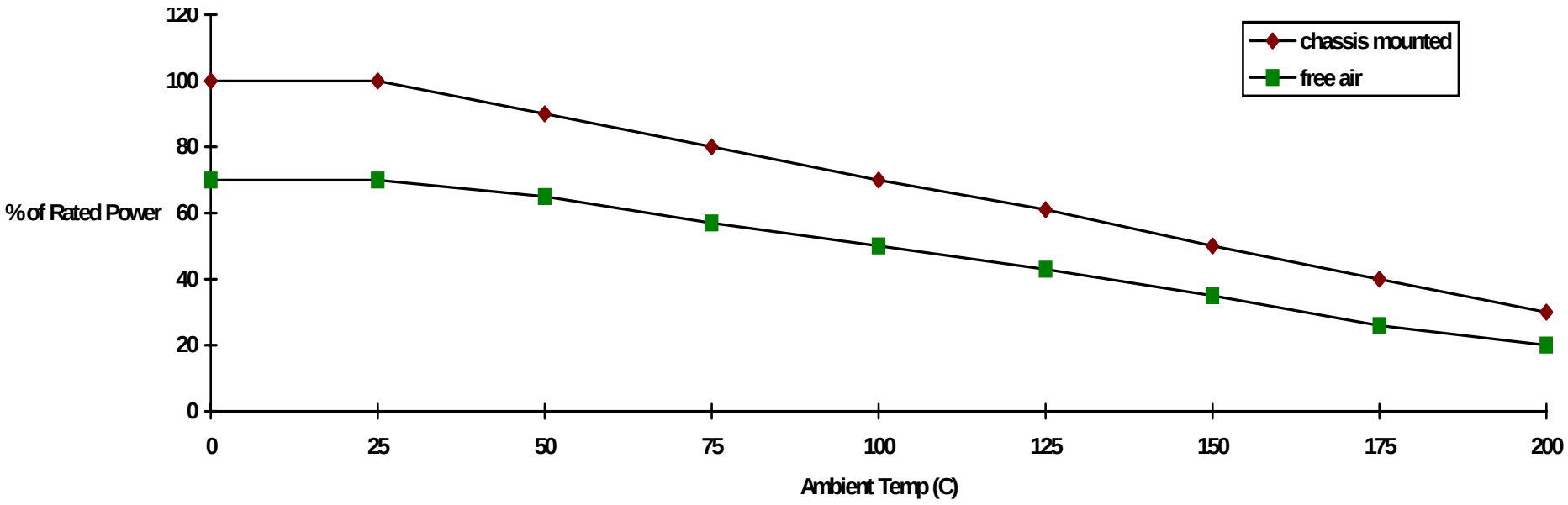

Figure 3.1 Braking Resistor Derating Graph (Metal Clad Resistors)

Drive Brake Unit

Note ***Refer to Appendix E: "Technical Specifications" - Internal Dynamic Brake Switch for further details.***

The brake unit is optional. However, it is possible to retro-fit a brake unit should the need arise. There are three brake units, one for each drive frame size.

The brake units have the following specification -

Continuous duty:	30% of Constant Torque drive rating
Operating voltage:	750 - 820V dc
Maximum duty cycle:	30%
Maximum on time:	20 seconds

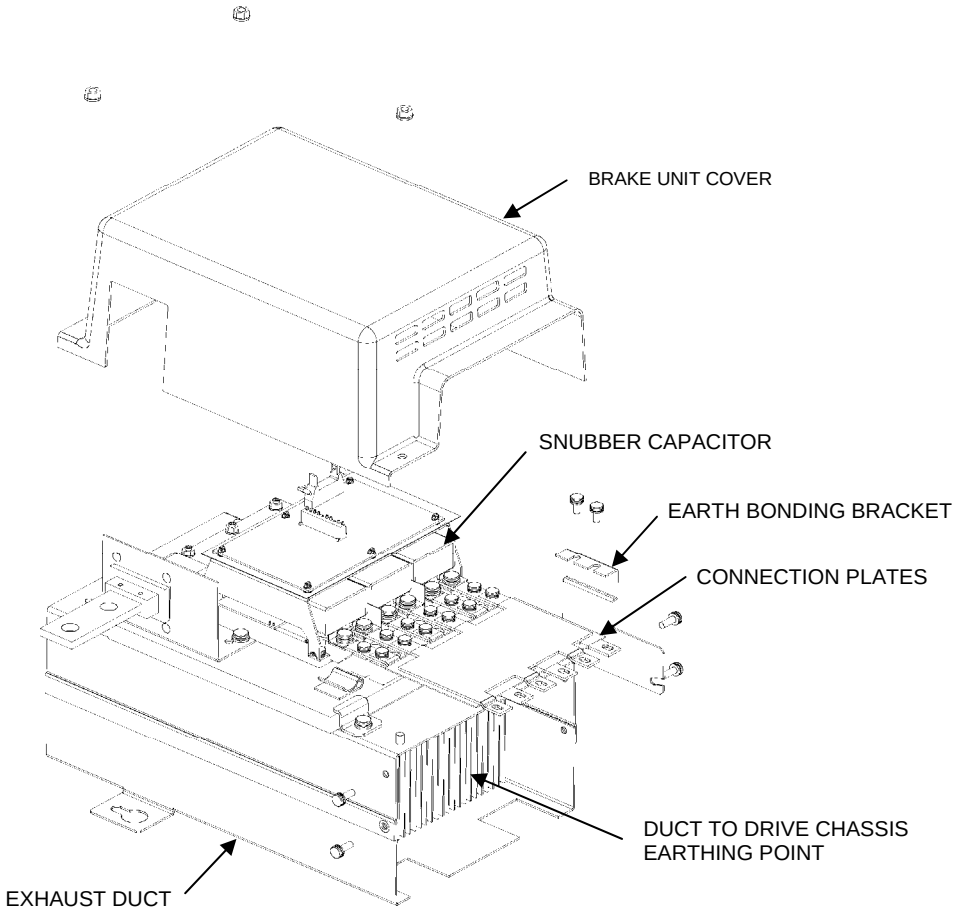

The original exhaust duct supplied with the drive or the exhaust duct supplied with the brake unit may be used in the final installation.

The brake unit consists of the following parts:

- Exhaust Duct.
- Heatsink & IGBT assembly.
- Control cable.
- Brake connection plates - 1 set for Frame G/H and 2 sets for Frame J.
- Heatsink fixings.
- Brake unit cover and retaining nuts.
- Earth bonding bracket.

The brake unit is shipped in a pre-assembled state (except for the connection plate(s)). It is recommended that this assembly is carefully studied prior to installation within the cubicle. We also recommend that the brake unit heatsink/IGBT assembly is removed from the exhaust duct before installing the unit within the cubicle.

Required tools

- M10 spanner
- #3 posidrive or phillips torque screwdriver
- #2 posidrive or phillips torque screwdriver

Installation Procedure

WARNING

Follow the procedure carefully.

Disconnect all electrical supplies before working on the drive - allow 15 minutes for the drive dc link capacitors to fully discharge.

Do not drop any screws, nuts or extraneous parts into the drive.

Associated Equipment

Refer to Figure 5-2, page 5-11, for typical brake unit installation.

1. Remove the brake unit cover.
2. Remove the earth bonding bracket from the heatsink.
3. Loosen heatsink clamps.
4. Remove the heatsink/IGBT assembly and carefully place it on a clear flat surface - take care not to damage the heatsink fins.
5. If retro-fitting the brake unit to an existing exhaust duct then: Remove the exhaust duct aperture cover and screws. Transfer heatsink clamps and screws from shipping brake duct to existing drive duct.
6. Remove the drive's top front cover (plastic) via 2 off ¼ turn fasteners at top of drive.
7. Remove drive top cover which is attached via 4 off M5 screws on the side and 2 off M5 screws on the top. Care should be taken to prevent the cover from falling into the drive and damaging the internal components. If fitting a new exhaust duct assembly, fit the duct assembly in to the top panel and secure to drive with 4 off M5 screws. Secure to the mounting panel with M8 fixings.
8. Install brake unit IGBT/heatsink assembly within exhaust duct and tighten clamps. Take care not to damage components on the open PCB with handtools.
9. Connect brake unit control cable to the 14 way bulkhead connector at the top of the drive.
10. Secure the brake connecting plate(s) to the phase joining tabs of the drive top phase (M3/U) and the phase joining tabs on the brake unit with M5 screws provided. Tighten to 4Nm (3ft/lbs).
11. Fit earth bonding bracket to heatsink and duct connection/earthing screws (M5) to exhaust duct. Tighten to 4 Nm (3 ft-lb). **NOTE - This connection <u>must not</u> be omitted as it is required for safety reasons.**
12. Replace drive top cover, **exercise care to not damage brake connection plates with the top cover as this will compromise the electrical insulation.** Tighten 4 off M5 screws on side of drive and 2 off M5 screws on top of cover to 2.5 Nm (1.84 ft-lb).
13. Replace drive front top cover with 2 off ¼ turn fasteners.
14. Fit brake unit cover with M6 captive washer nuts.

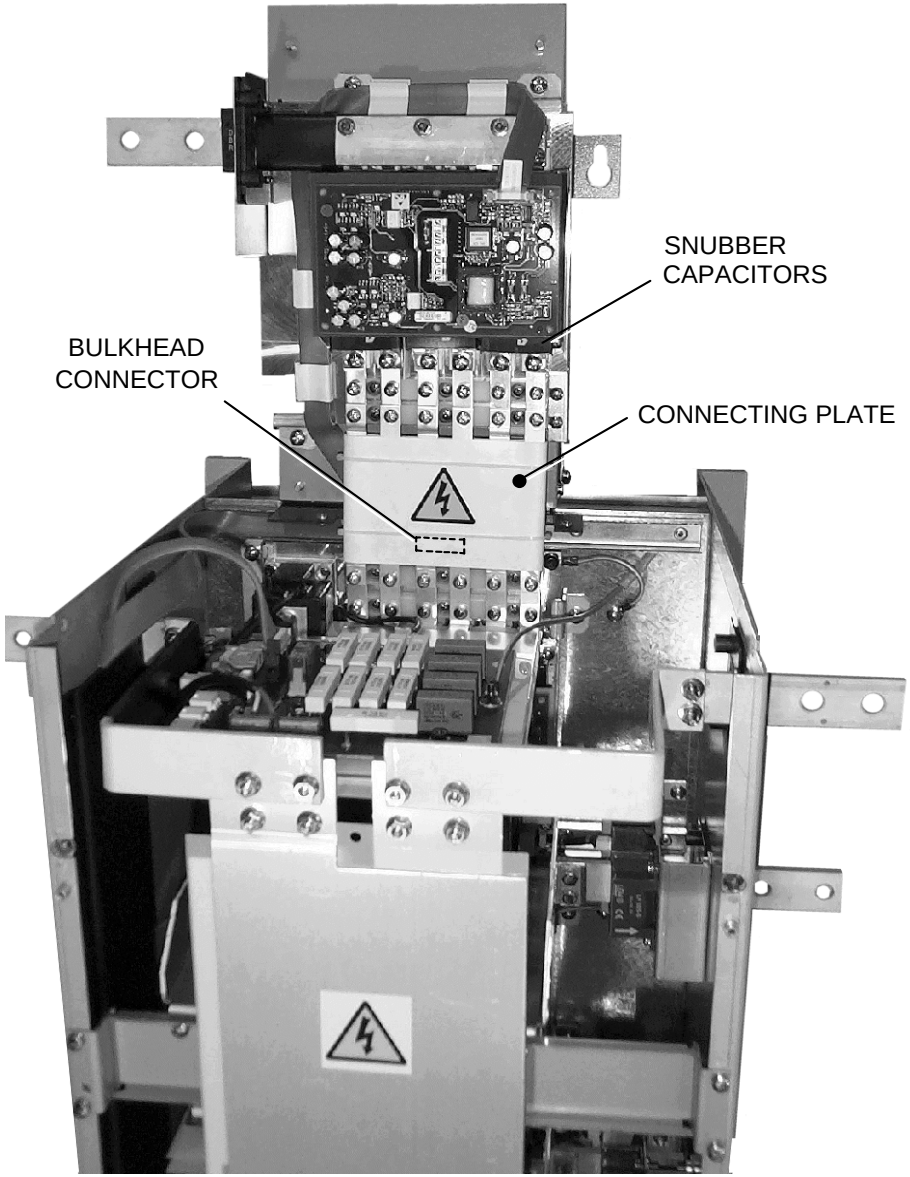

Figure 3.2 Front View of Exhaust Duct/Brake Unit/Drive Assembly showing the Brake Connecting Plate and Snubber Capacitors fitted

890SD Semiconductor Protection Fuses

Short circuit protection Semiconductor Fuses should be installed in the 3-phase supply to the drive module to protect the input bridge. Circuit breakers or HRC fuses will not protect the input bridge.

Circuit Breakers

We do not recommend the use of circuit breakers (e.g. RCD, ELCB, GFCI), but where their use is mandatory, they should:

- Operate correctly with dc and ac protective earth currents (i.e. type B RCDs as in Amendment 2 of IEC755).
- Have adjustable trip amplitude and time characteristics to prevent nuisance tripping on switch-on.

When the ac supply is switched on, a pulse of current flows to earth to charge the internal/external ac supply EMC filter's internal capacitors which are connected between phase and earth. This has been minimised in Parker SSD Drives' filters, but may still trip out any circuit breaker in the earth system. In addition, high frequency and dc components of earth leakage currents will flow under normal operating conditions. Under certain fault conditions larger dc protective earth currents may flow. The protective function of some circuit breakers cannot be guaranteed under such operating conditions.

WARNING

Circuit breakers used with VSDs and other similar equipment are not suitable for personnel protection. Use another means to provide personal safety. Refer to EN50178 / VDE0160 / EN60204-1

Filters

Note ***Follow the cabling requirements given in Appendix E: "Technical Specifications".***

External AC Supply EMC Filter

WARNING!

The specified external filters are only suitable for use with TN supplies. Please check for suitability in Appendix E: "Technical Specifications" - External AC Supply (RFI) Filters.
Do not touch filter terminals or cabling for at least 5 minutes after removing the ac supply. Only use the ac supply filter with a permanent earth connection.

Mount the EMC filter and line choke as close as possible to the drive module. Take care not to obstruct the filter or drive ventilation ducts. Allow 40mm spacing between filters.

Connections between the drive, choke and filter must always be as short as possible, and be segregated from all other cables. If this cable/busbar exceeds 1.0m in length then it must be replaced with a screened/armoured cable, with the screen/armour earthed at both the filter, choke and drive ends with large-area contact surfaces, preferably with metal cable glands.

The routing of the connections between the filter, choke and drive module should be chosen to ensure their close proximity. **Ensure that the filter output leads are separated from the filter input leads. Failure to achieve this will result in increased conducted emissions**.

Caution

The filter flying leads may reach 100°C under normal operating conditions. These should be separated by at least one cable diameter and adequately ventilated.

Associated Equipment

The connection between the drive module and the motor must be installed away from all other cables or wires. Ideally the filter(s) and choke will be mounted onto the same metallic back panel as the drive. The RF connection between the drive, filter, choke and panel should be enhanced as follows:-

- Remove any paint/insulation between the mounting points of the EMC filter(s), choke, drive module and panel.
- Liberally apply petroleum jelly over the mounting points and securing threads to prevent corrosion. Alternately conducting paint could be used on mounting panels.
- If the proceeding is not possible, then the RF earth bond between the filter and drive module is usefully improved by making an additional RF earth connection using wire braid of at least $10mm^2$ cross sectional area (due to skin effect).

Note ***Metal surfaces such as eloxized or yellow chromed (e.g. cable mounting or 35mm DIN rails, screws and bolts) have a high RF impedance which can be very detrimental to EMC performance.***

A low RF impedance path must be provided between the motor frame and back panel on which the drive, choke and EMC filters are mounted. This low impedance RF path should follow the path of the motor cables in order to minimise the loop area. **Failure to do so will result in increased conducted emissions.**

This will normally be achieved by:-

1. Bonding the armour of the motor supply cables at one end to the motor frame and at the other to the cubicle back panel. Ideally 360° bonding is required, which can be achieved with cable glands.
2. Ensuring that conduit containing the motor supply cables is bonded together using braid. The conduit shall also be bonded to the motor frame and the cubicle back panel.

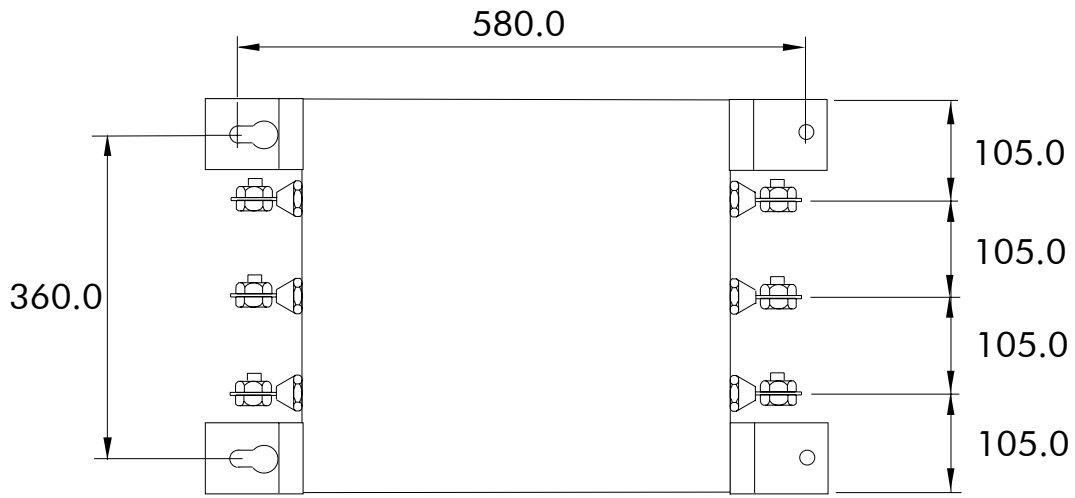

Mounting Keyway Detail

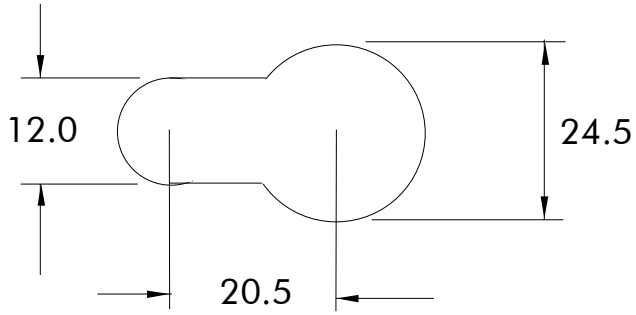

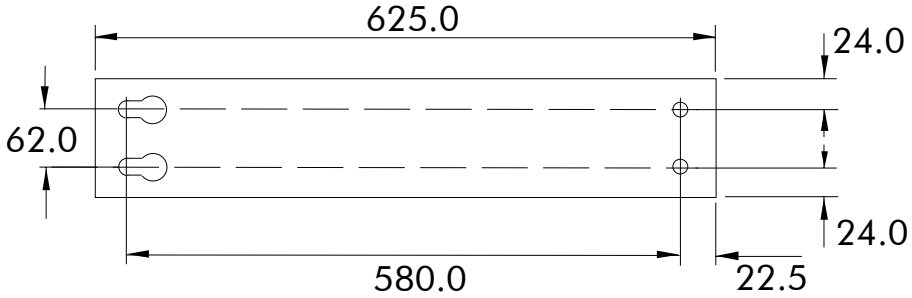

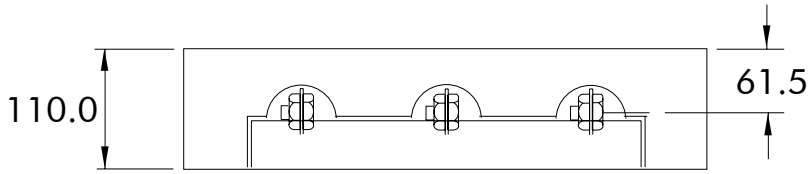

Dimensions are in millimetres

AC Supply Filter CO467843U340

Associated Equipment

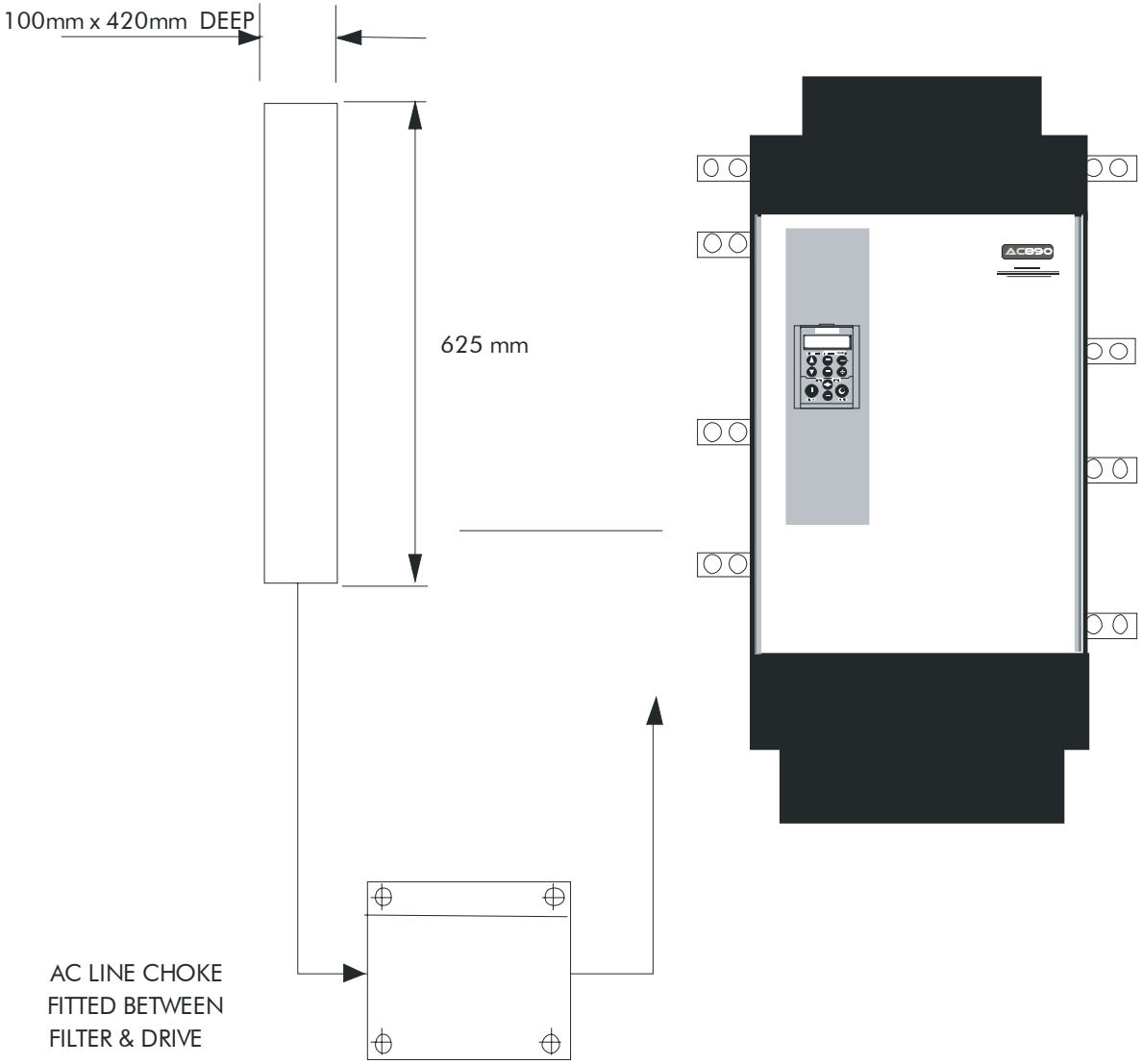

Filter Mounting Details Using 1 off Part No. CO467843U340 for Type G

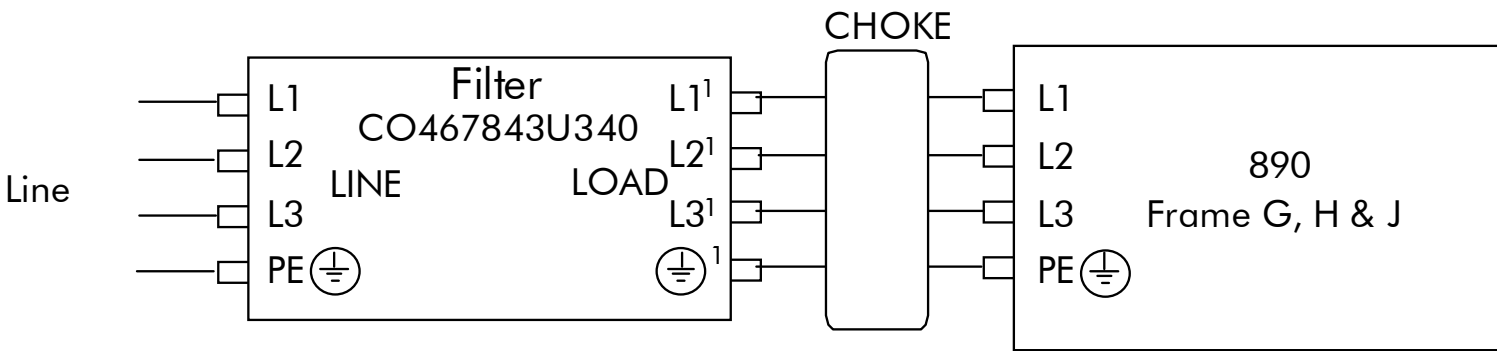

Typical Wiring Details Using 1 off Part No. CO467843U340 for Frame G

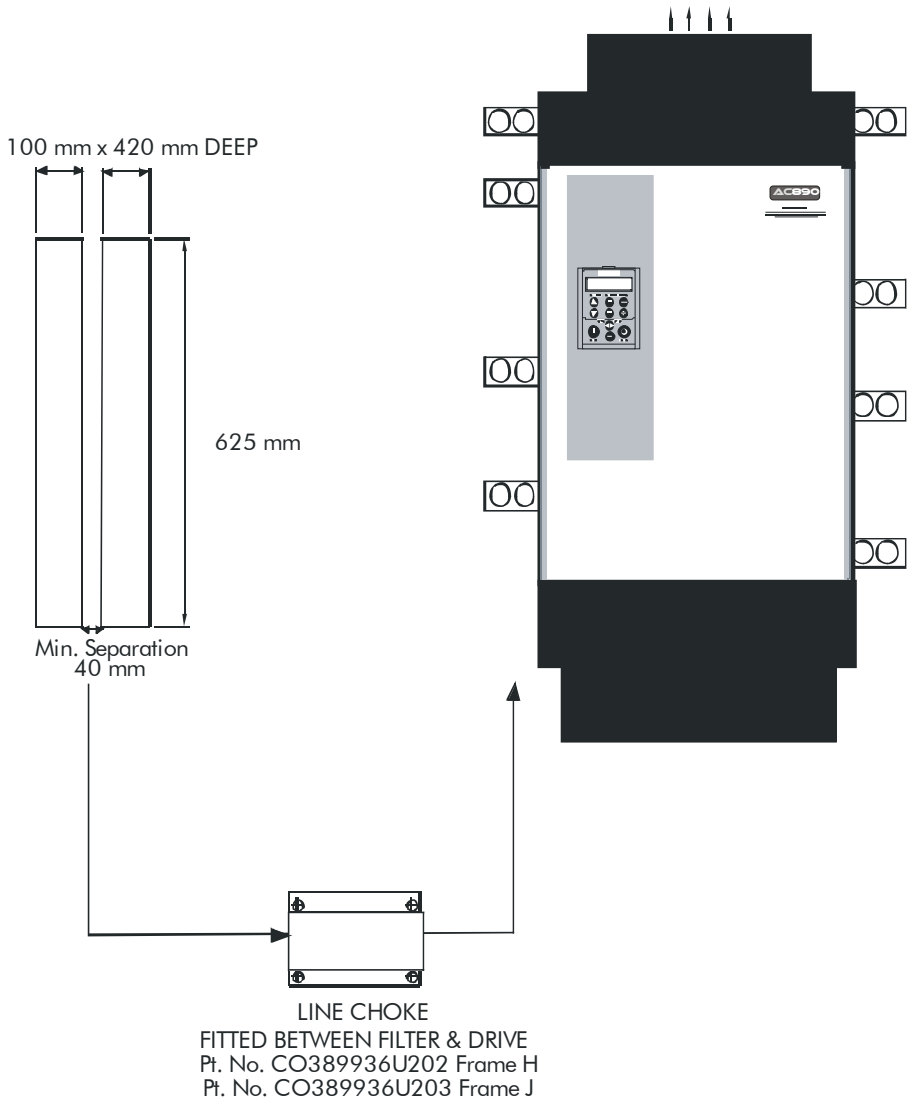

Filter Mounting Details using 2 off Part No. CO467843U340 Frames H & J

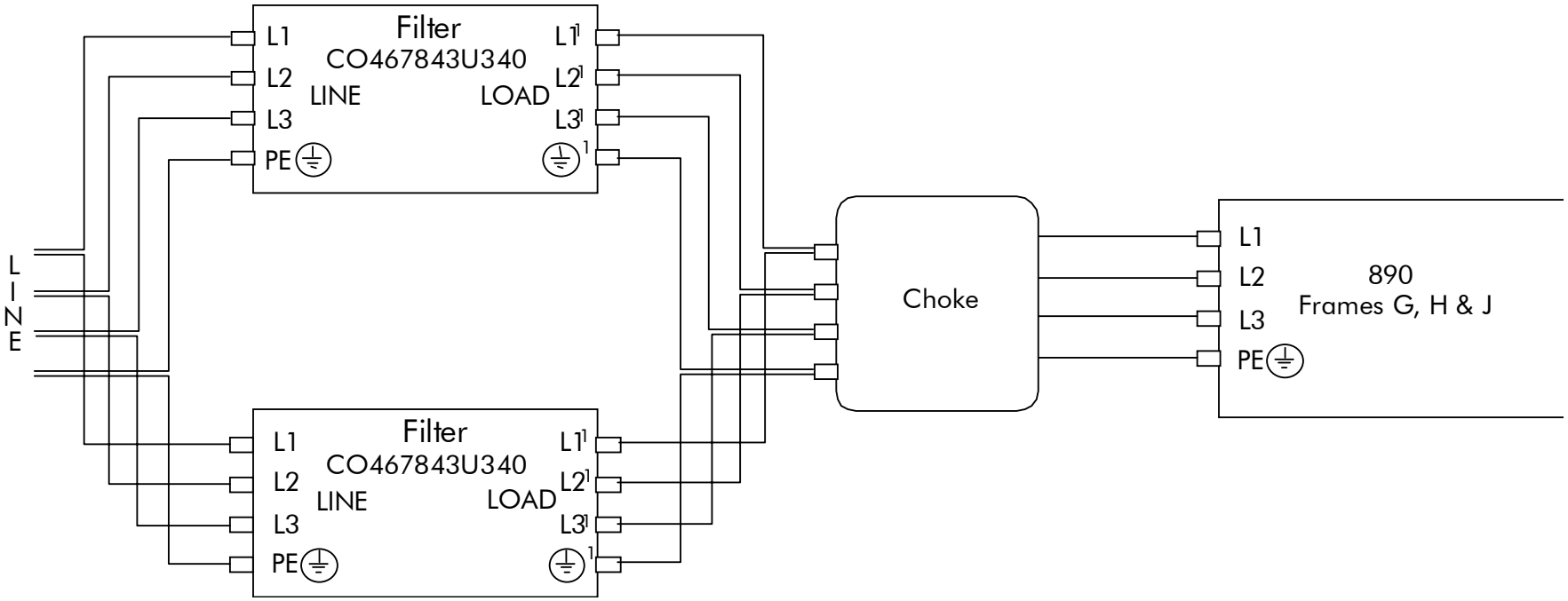

Using 2 off Part No. CO467843U340 Frame H (2200) and Frame J

Note ***For 890 Frames G, H & J, the specified line choke in table B-1 must still be fitted between the 890 and its filter. This is to ensure reliability of both the filter and drive.***

EMC Motor Output Filter

This can help the drive achieve EMC and filter thermal conformance. It also ensures longer motor life by reducing the high voltage slew rate and overvoltage stresses. Mount the filter as close to the VSD as possible. Please refer to Parker SSD Drives for the selection of a suitable filter.

Chapter 6
Operating the Drive

Having turned the motor for the first time, now learn about the various ways you can start and stop the drive. This chapter also offers some application advice.

- Control Philosophy
- Start/Stop and Speed Control
- Starting and Stopping Methods
- Application Advice

Control Philosophy

There are four ways to control the drive using Remote and Local control:

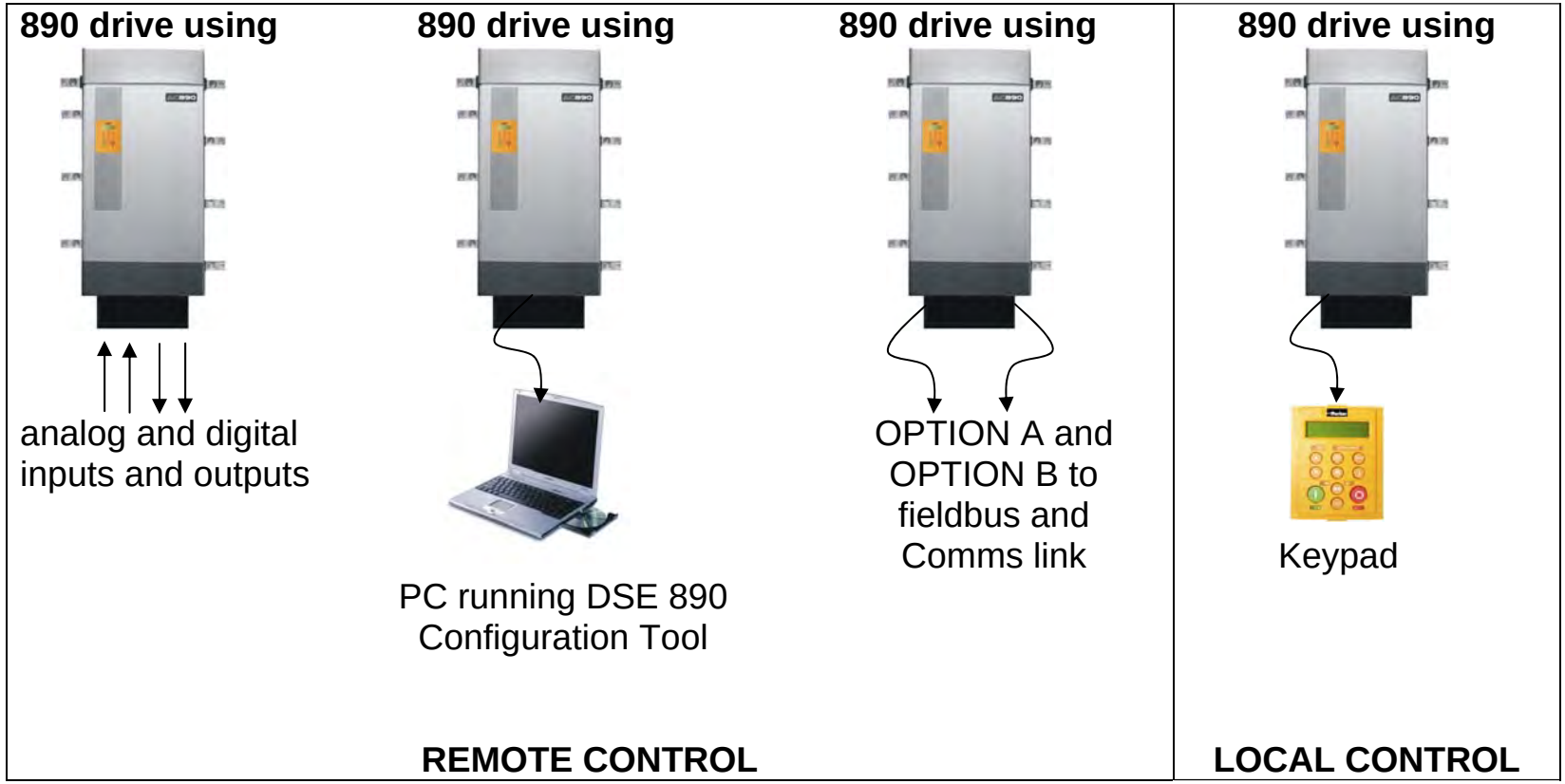

Figure 3.1 Remote and Local Control Modes

Start/Stop and Speed Control

There are two forms of control in operation at any time: *Start/Stop* and *Speed Control*. Each can be individually selected to be under either Local or Remote Control.

- **Local or Remote Start/Stop** decides how you will start and stop the drive.
- **Local or Remote Speed Control** determines how you will control the motor speed.

In each case, Local and Remote control are offered by using the following:

Local: The Keypad
Remote: Analog and digital inputs and outputs, RS232 Port or Technology Options

Note ***Refer to Appendex D: "Programming" - LOCAL CONTROL.***

Thus the drive can operate in one of four combinations of local and remote modes:

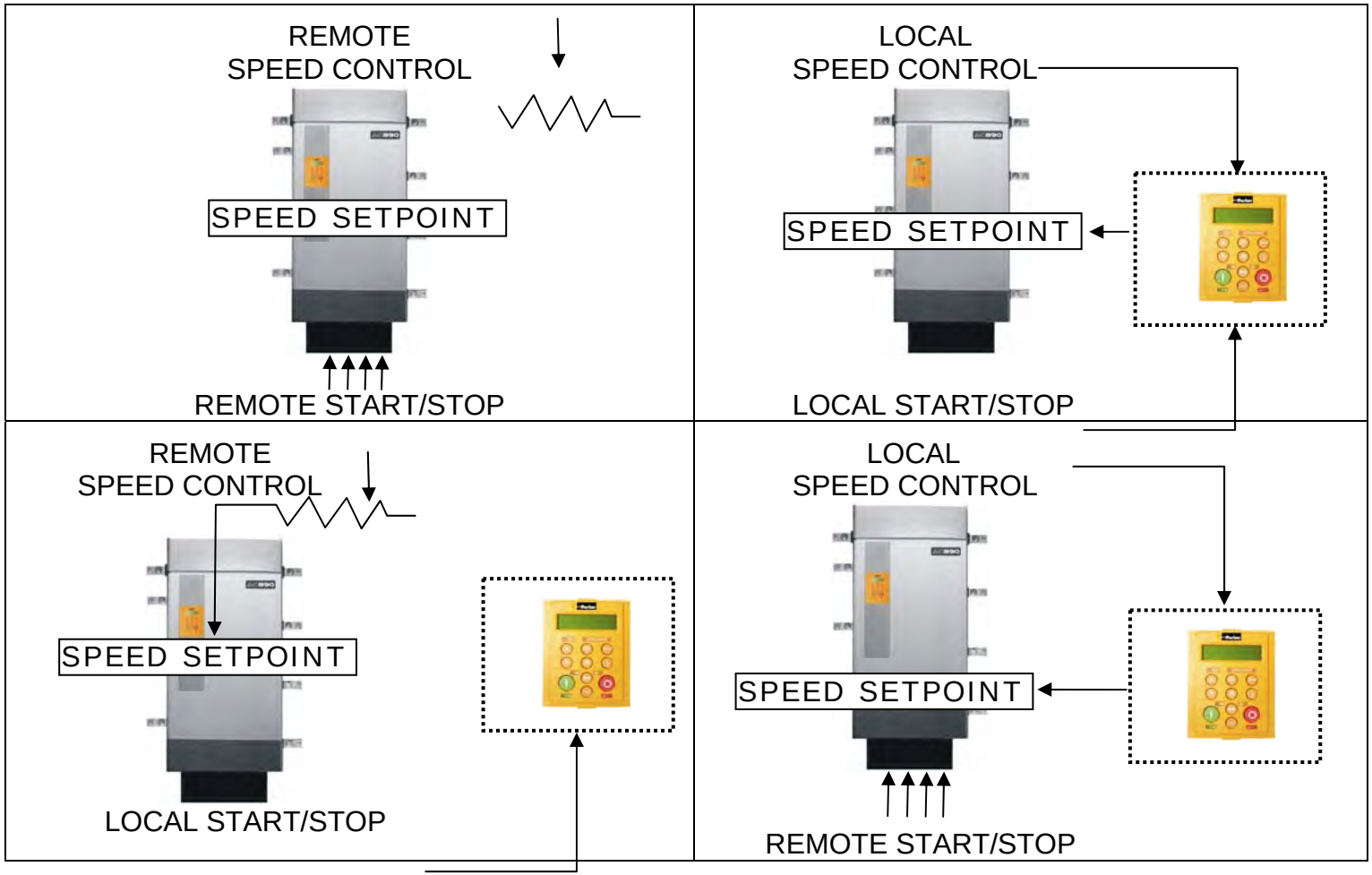

Figure 3.2 The Four Combinations of Local and Remote Control

Note ***Start/Stop is also known as "Sequencing".***
Speed Control is also known as "Reference Generation".

The Start/Stop Mode Explained

The default configuration below shows the drive in Remote control, (using the analog and digital inputs and outputs). This example will be referred to in the following explanations.

Start/Stop Controlled Remotely

In the configuration shown, the reference value is obtained by summing ANALOG INPUT 1 and ANALOG INPUT 2. The direction of rotation is controlled by DIGITAL INPUT 4. When the RUN input (DIGITAL INPUT 1) is TRUE, the SPEED DEMAND ramps up to the reference value at a rate controlled by ACCEL TIME. The drive will continue to run at the reference value while the RUN input remains TRUE.

Similarly when the JOG input (DIGITAL INPUT 5) is TRUE, the SPEED DEMAND ramps up to the JOG SETPOINT at a ramp rate set by JOG ACCEL TIME (not shown in the diagram).
The drive will continue to run at the JOG SETPOINT while the JOG input remains TRUE.

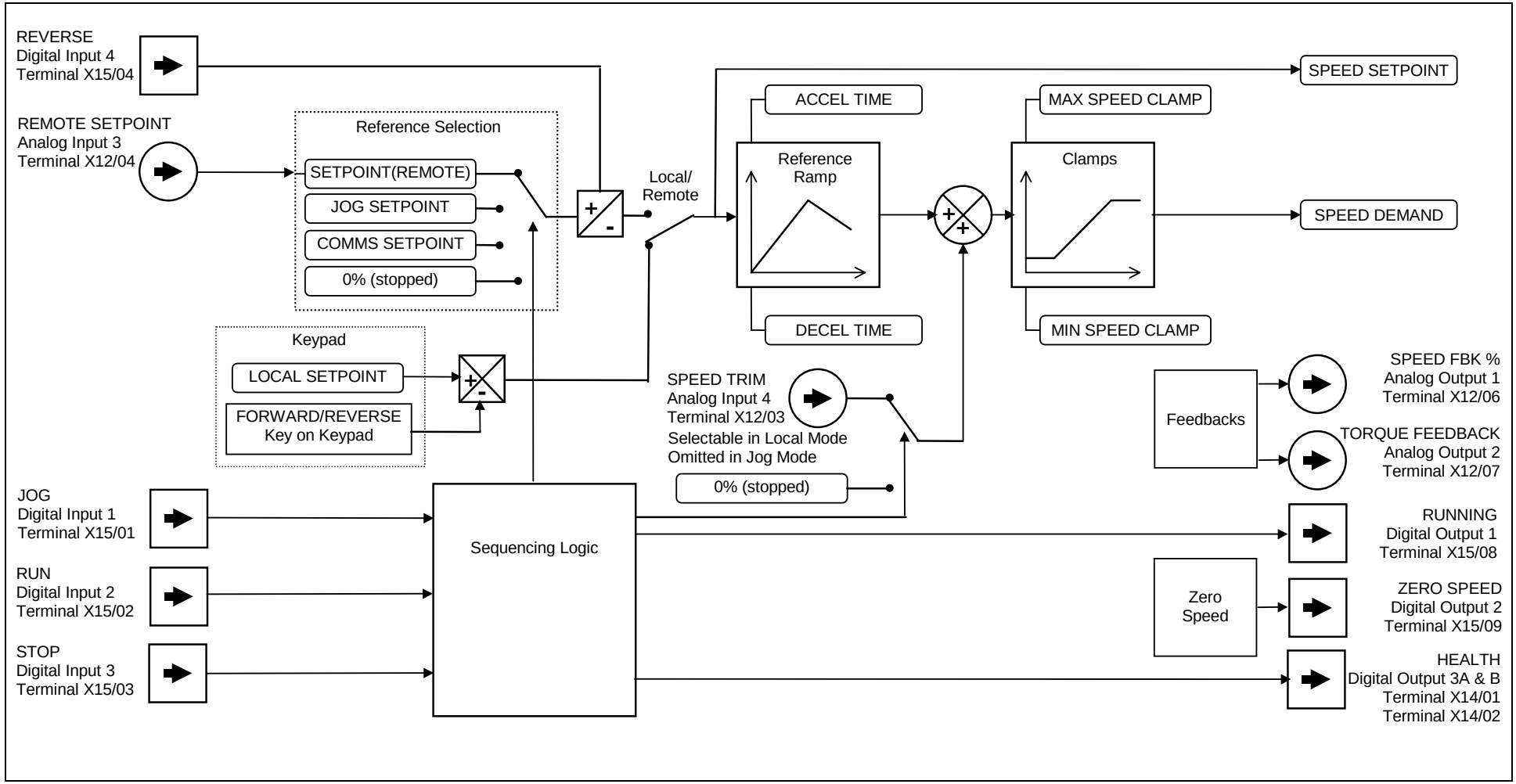

Figure 3.3 Portion of the Shipping Configuration

Start/Stop Controlled Locally

The reference value is set by the SETPOINT (LOCAL) parameter. (The direction of rotation is controlled by the DIR key (forward/reverse) on the 6901 Keypad). When the RUN key is pressed the SPEED DEMAND ramps up to the reference value at a rate controlled by ACCEL TIME. The drive will continue to run at the reference value even when the RUN key is released. Press the STOP key to “stop” the drive.

When the JOG key is pressed and held, the SPEED DEMAND ramps up to the JOG SETPOINT at a ramp rate set by JOG ACCEL TIME (not shown in the diagram). Release the JOG key to “stop” the drive.

Interaction between RUN and JOG

Only one of these signals can be in effect at any one time; the other signal is ignored. The drive must be “stopped” to change from running to jogging, or vice versa.

Start/Stop Mode Diagnostics

In the configuration shown, Start/Stop mode provides two DIGITAL OUTPUT signals (RUNNING and HEALTH).

The RUNNING signal is TRUE from the time a start command is processed until a stop sequence is completed. This normally means the time between the drive starting until the power stack is quenched. Refer to Appendix B : “Sequencing Logic” for a more detailed description.

The HEALTH output is TRUE when the drive is not tripped.

Additional diagnostic parameters are available when using the Keypad. These are described in Chapter 8: "Keypad Menus".

Starting and Stopping Methods

Note ***Refer to Appendix D: "Programming" - REFERENCE, SEQUENCING LOGIC, REFERENCE STOP and REFERENCE RAMP, for explanations of parameters.***

Normal Stopping Methods

The Shipping Configuration is set to "Ramp to Stop" (at STOP TIME, set to 10.0s).

- To "stop" the locally controlled drive press the STOP key on the Keypad
- To "stop" the remotely controlled drive remove the 24V from the RUN input (terminal X15/02), and from the STOP input (terminal X15/03)

Using the Keypad or DSE Configuration Tool, the drive can be selected to "Ramp to Stop", or to "Coast to Stop" at one of two rates (STOP TIME or FAST STOP TIME). To do this, change the RUN STOP MODE parameter (PREF102.01) to the required selection.

Ramp to Stop

Set the SETUP::SEQ & REF::REFERENCE STOP::RUN STOP MODE parameter to RUN RAMP.

When a stop command is received, the drive decelerates from its actual speed towards zero for the programmed DECEL TIME time. When this time has elapsed, SPEED TRIM is ramped to 0% in the programmed STOP TIME time.

Note ***If SPEED TRIM does not operate, SPEED DEMAND is reduced to 0% in DECEL TIME.***

The power stack remains energised until the STOP DELAY period has elapsed.

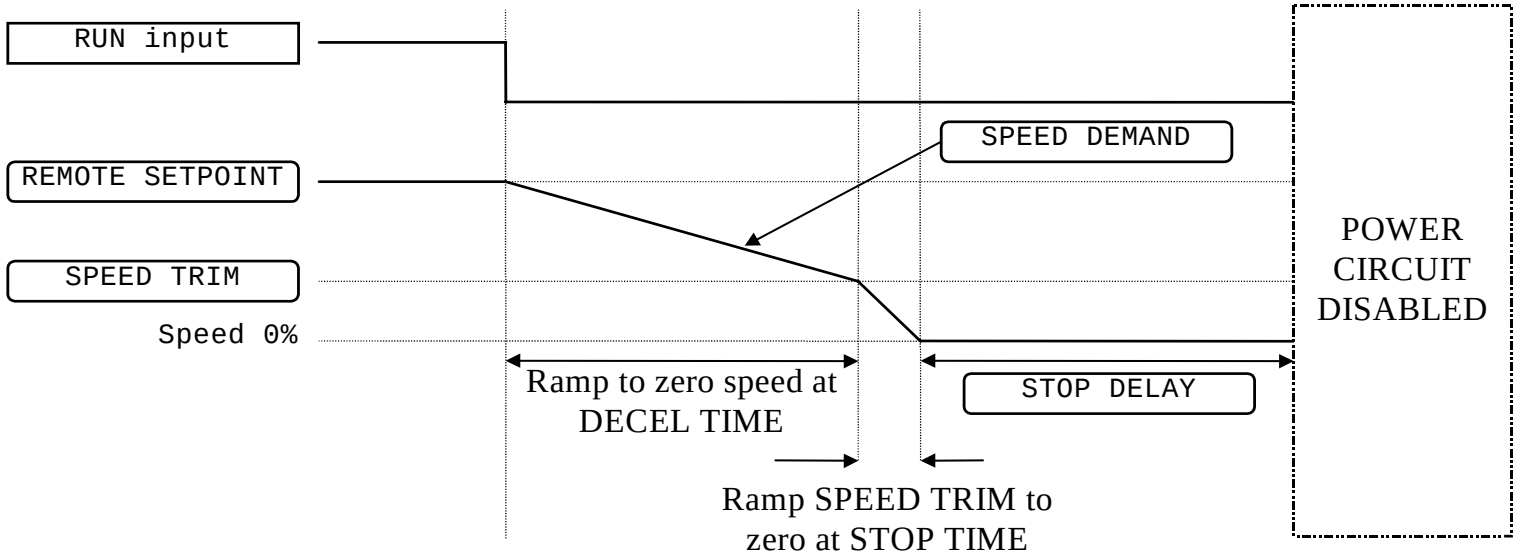

Figure 3.4 Ramp to Stop with a Remote Reference

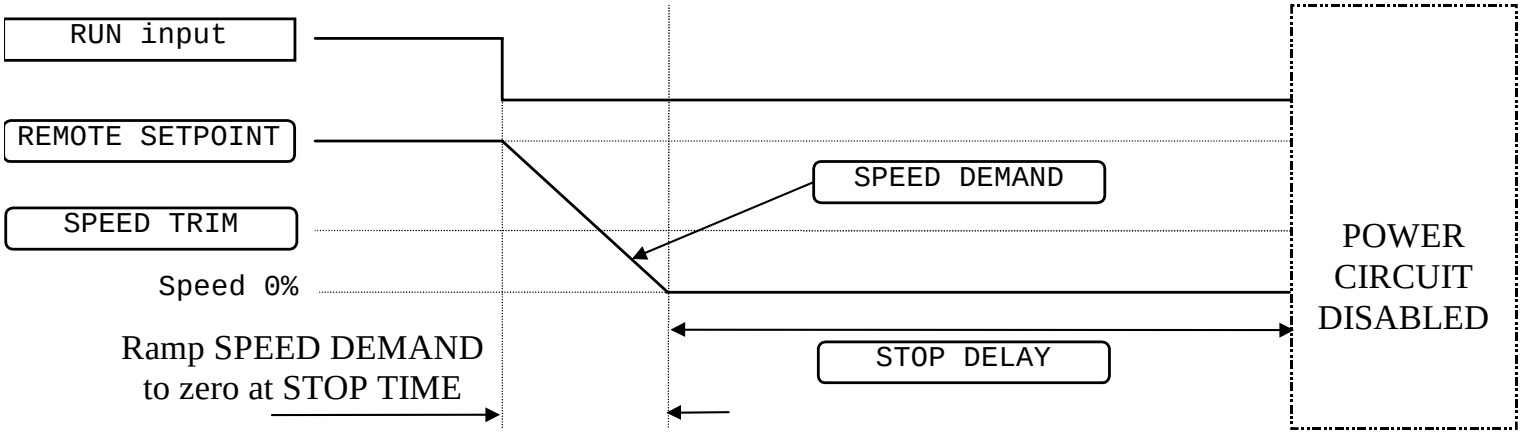

Figure 3.5 Remote to Stop with a Remote Reference: DECEL TIME = 0.0s

A special case exists when the DECEL TIME is set to 0.0 seconds, or when the HOLD parameter is TRUE. In both these situations the SPEED DEMAND will ramp down to zero at the STOP TIME.

Coast to Stop

Set the SETUP::SEQ & REF::REFERENCE STOP::RUN STOP MODE parameter to COAST.

In this mode the DECEL TIME ramp and the STOP TIME ramp are both ignored. Thus the SPEED DEMAND changes immediately to 0% as soon as the Stop command is given. The power stack is also immediately disabled at this time, causing the load to coast.

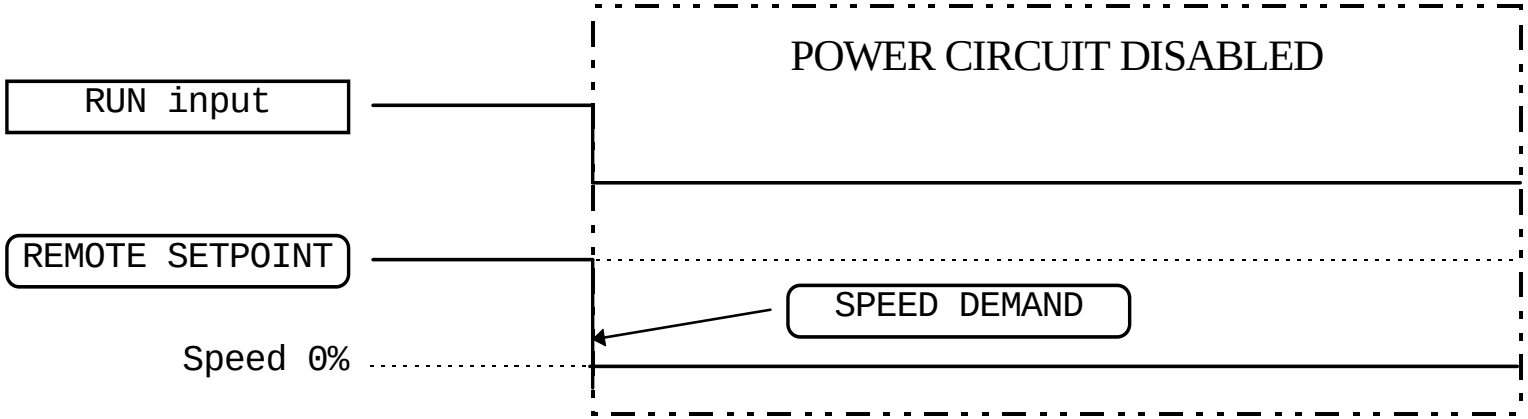

Figure 3.6 Coast to Stop with a Remote Reference

Advanced Stopping Methods

The drive can be selected to NOT FAST STOP or to NOT COAST STOP. The stopping procedure is unaffected by Local or Remote Sequencing options.

Forced Fast Stop

The Not Fast Stop mode overrides the RUN FORWARD, RUN REVERSE and JOG inputs in Remote mode, and the RUN and JOG Keypad keys in Local mode.

Select the SETUP::SEQ & REF::REFERENCE STOP::FAST STOP MODE parameter to either RAMP or COAST. The stopping sequence starts when the NOT FAST STOP input goes FALSE, regardless of the state of the RUN input.

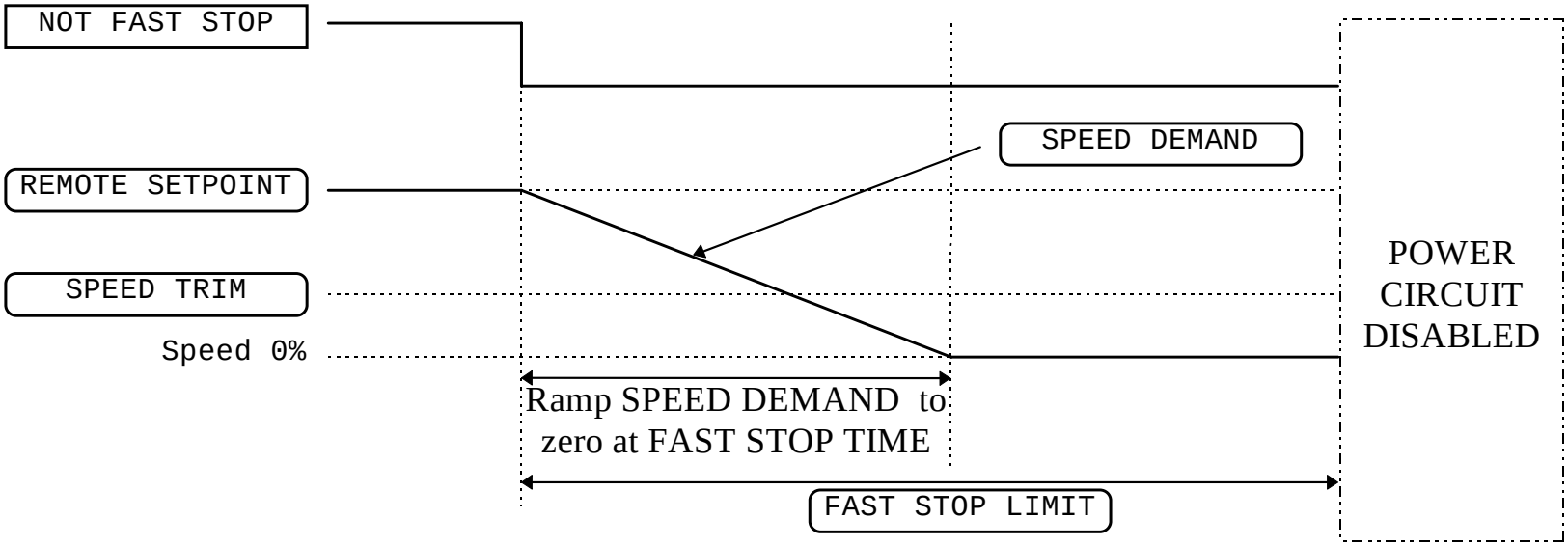

Figure 3.7 Forced Fast Stop RAMP Mode example

Forced Coast Stop

Using the Not Coast Stop mode immediately disables the power stack, causing the load to coast to a stop.

The drive gives priority to the NOT COAST STOP signal. The NOT FAST STOP signal is therefore ignored while NOT COAST STOP is active.

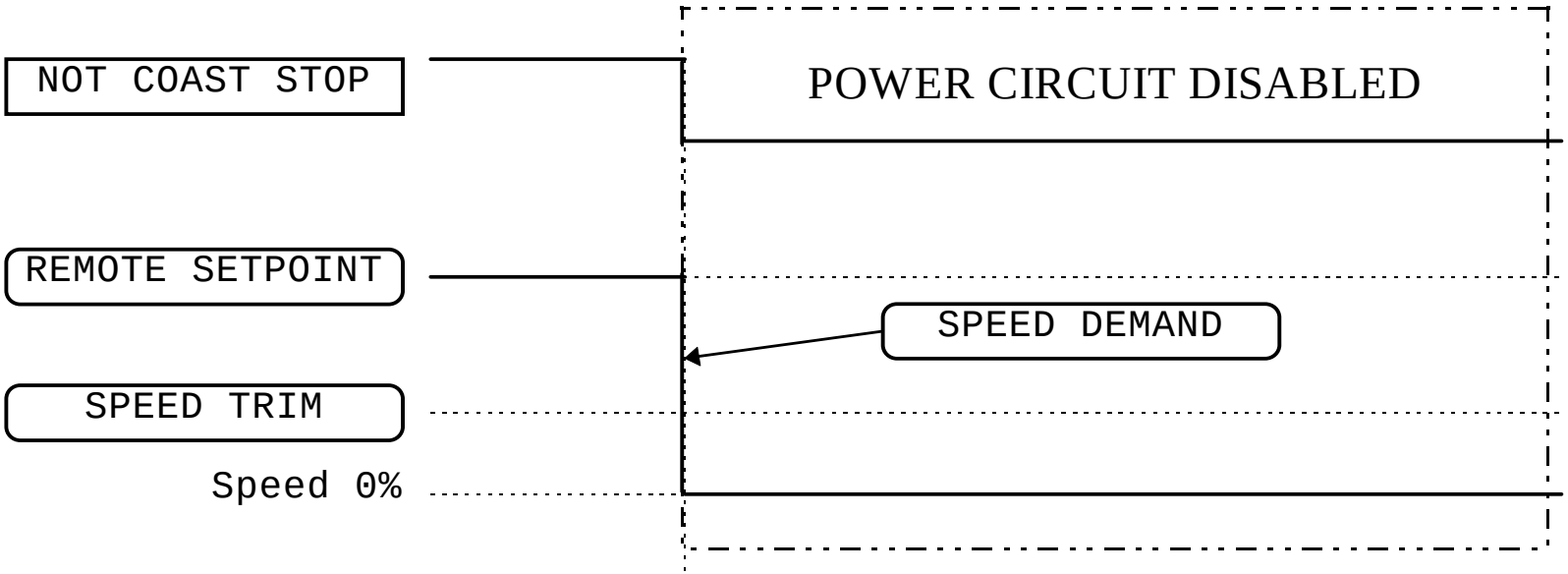

Figure 3.8 Forced Coast Stop example

The Trip Condition

When a trip condition is detected, a similar stopping method to NOT COAST STOP is used. The power stack cannot be re-enabled until the trip condition has been cleared and successfully reset.
Refer to Chapter 9: “Trips and Fault Finding” for further details.

Logic Stopping

The drive can be stopped by setting the NOT STOP to FALSE for a short time, (>100 ms). The stop sequence continues even if the NOT STOP signal goes inactive before the drive is stopped. Various combinations of stop logic are shown below.

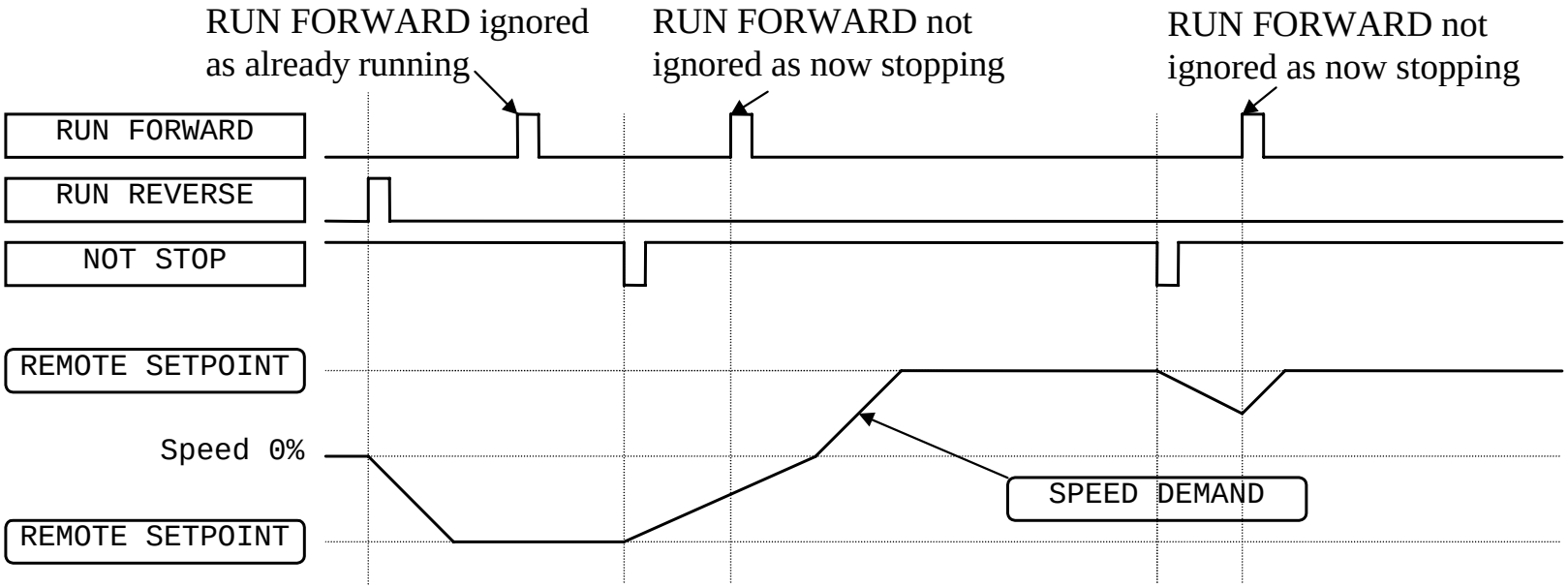

Figure 3.9 Interaction between RUN FORWARD, RUN REVERSE and NOT STOP Parameters

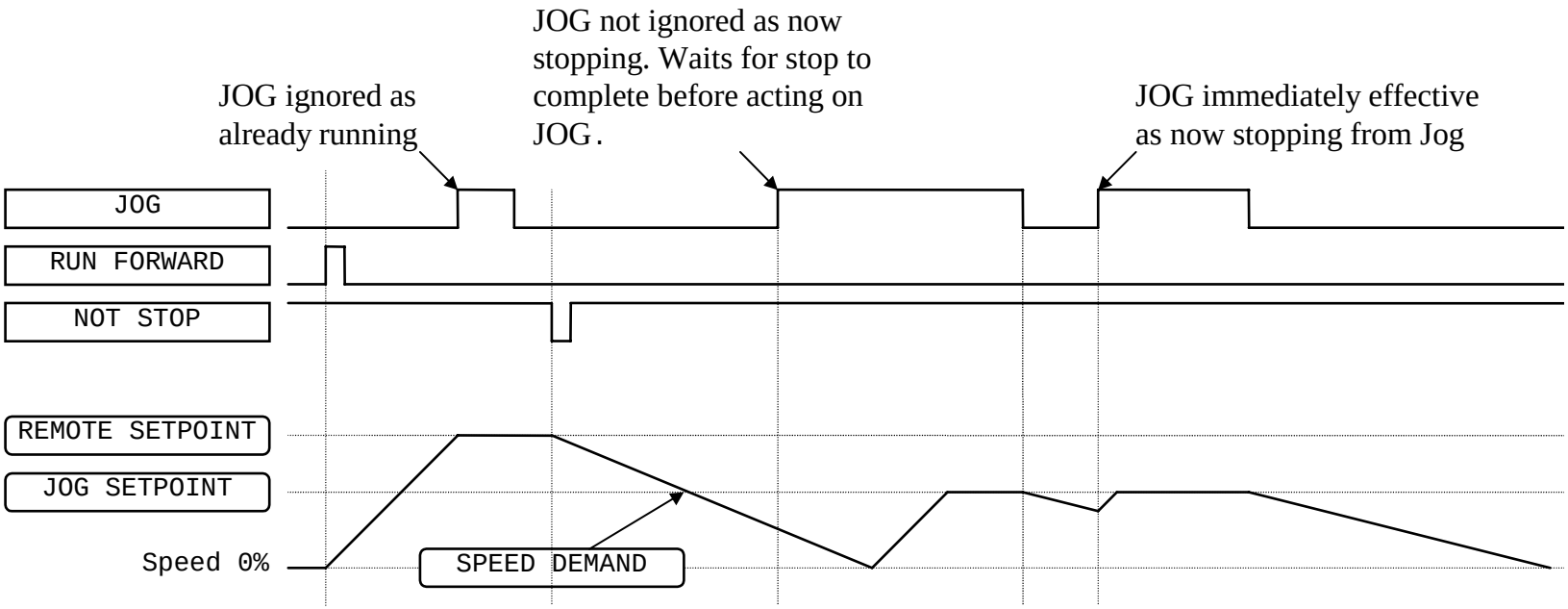

Figure 3.10 Example of the Interaction between RUN FORWARD and JOG Parameters

Starting Methods

The methods below can be used when the drive has the following default configurations from DSE 890 installed: Closed Loop Vector, Sensorless Vector, Shaftless Printing, Shipping, Volts/Hertz.

IMPORTANT **DRIVE ENABLE must be True in all cases.**

Single Wire Logic Starting

Use just DIGITAL INPUT 2 when the motor direction will always be the same. The motor will run while the RUN switch is closed, and will stop when it is open.

Note that the SETUP::SEQ & REF::SEQUENCING LOGIC**::**NOT STOP parameter is active (FALSE - not wired to), meaning that the drive will only run while the RUN parameter is held TRUE.

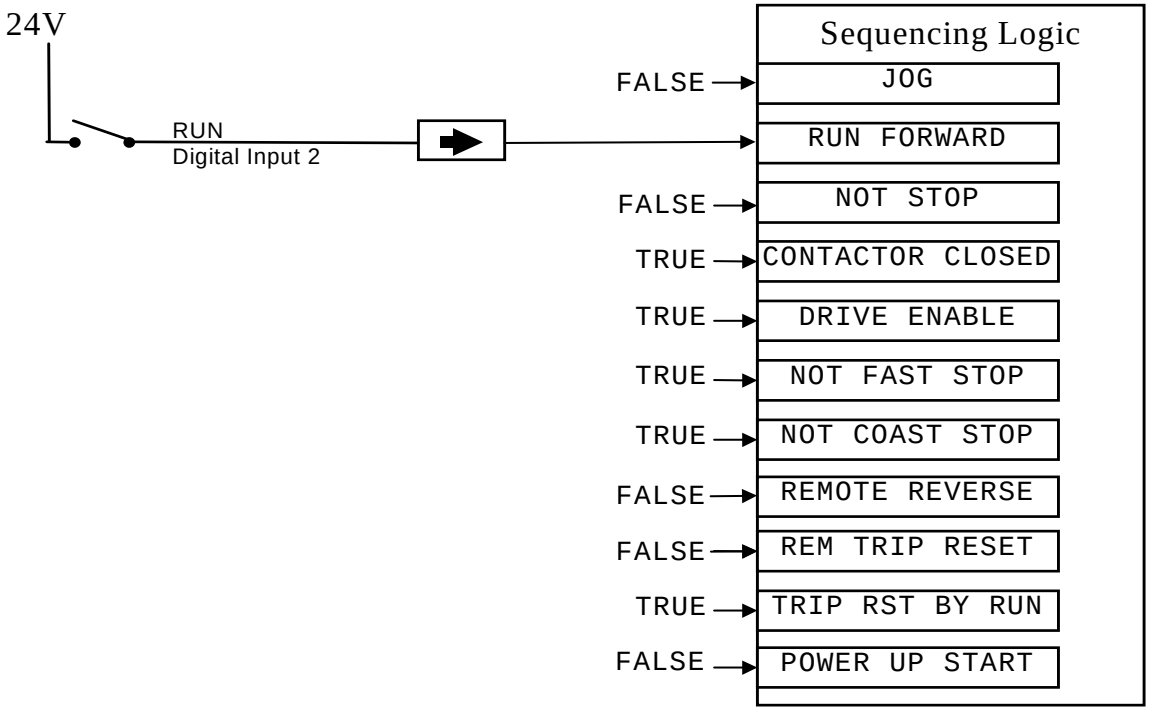

Figure 3.11 Wiring for Single Wire Starting (Default Configurations)

Two Wire Logic Starting

Re-configure the DSE 890 default configuration(s) by connecting SETUP::SEQ & REF::SEQUENCING LOGIC**::**REMOTE REV OUT to SETUP::SEQ & REF::REFERENCE::REMOTE REVERSE.

This uses two inputs; RUN and REVERSE. The drive can operate in forward and reverse depending upon which switch is closed. If both RUN and REVERSE are TRUE (24V) at the same time, both are ignored and the drive will stop.

Note that the SETUP::SEQ & REF::SEQUENCING LOGIC**::**NOT STOP parameter is active (FALSE - not wired to), meaning that the drive will only run while the RUN parameter is held TRUE.

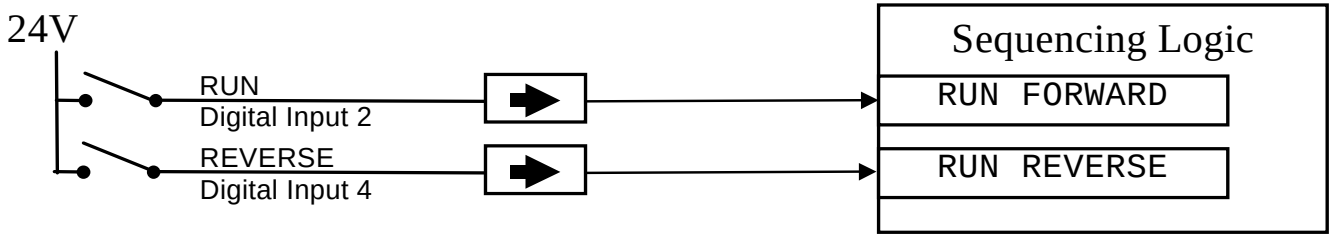

Figure 3.12 Wiring for Two Wire Logic Starting (Re-configured Default Configurations)

Three Wire Logic Starting

Re-configure the DSE 890 default configuration(s) by connecting SETUP::SEQ & REF::SEQUENCING LOGIC::REMOTE REV OUT to SETUP::SEQ & REF::REFERENCE::REMOTE REVERSE.

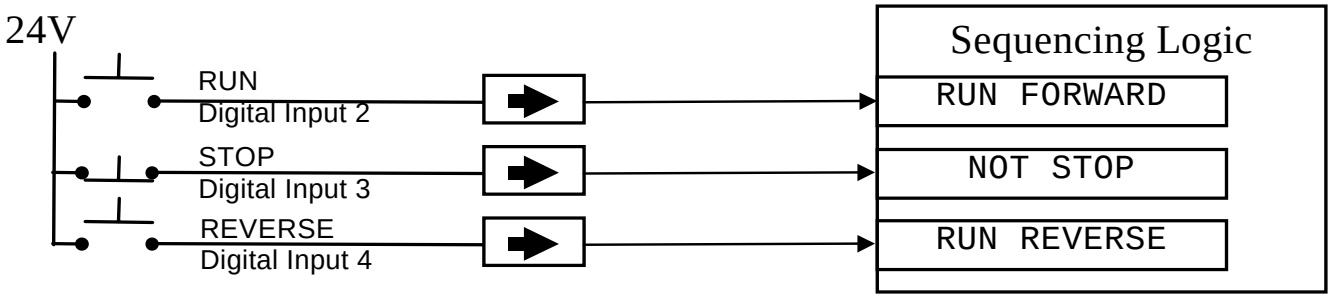

Figure 3.13 Wiring for Three Wire Logic Starting (Re-configured Default Configurations)

- Fit normally-open push button switches to RUN FORWARD and RUN REVERSE.
- Fit a normally-closed push button switch to NOT STOP, thus NOT STOP is held TRUE (24V). When TRUE, the action of NOT STOP is to latch the RUN FORWARD and RUN REVERSE signals. When FALSE, these signals are not latched.

For example, operating the RUN FORWARD switch starts the drive running forward. Operating the RUN REVERSE switch causes the drive to run in reverse. Operating the NOT STOP switch (making “NOT STOP” FALSE) at any time causes the drive to stop running.

Note ***The JOG parameter is never latched in this way. The drive only jogs while the JOG parameter is TRUE.***

Starting Several Drives Simultaneously

IMPORTANT **We do not recommend that the DRIVE ENABLE signal is used to start a drive in “normal” use.**

Use the DRIVE ENABLE parameter to control the output power stack. When this parameter is FALSE, the power stack is disabled regardless of the state of any other parameters. In conjunction with the HEALTH output parameter, DRIVE ENABLE can synchronise several drives on power-up.

Application Advice

Application advice is available through our Technical Support Department, who can also arrange for on-site assistance if required. Refer to the back cover of this manual for the address of your local Parker SSD Drives company.

- Always use gold flash relays, or others designed for low current operation (5mA), on all control wiring.
- Remove all power factor correction equipment from the motor side of the drive before use.
- Avoid using motors with low efficiency and small cos ø (power factor) as they require a larger kVA rated drive to produce the correct shaft kW.

Brake Motors

Brake motors are used in applications requiring a mechanical brake for safety or other operational reasons. The motor can be a standard induction motor fitted with an electro-mechanical brake, or it could be a special conical rotor machine. In the case of a conical rotor machine the spring-loaded brake is controlled by the motor terminal voltage as follows:

- At rest the motor is braked.
- When the motor is energised an axial component of the magnetic field due to the conical air-gap overcomes the force of the brake spring and draws the rotor into the stator. This axial displacement releases the brake and allows the motor to accelerate like a normal induction motor.
- When the motor is de-energised the magnetic field collapses and the brake spring displaces the rotor, pushing the brake disc against the braking surface.

Drives can be used to control the speed of conical rotor brake motors since the linear V/F characteristic maintains the motor magnetic field constant over the speed range. It will be necessary to set the FIXED BOOST parameter to overcome motor losses at low speed (see the FLUXING menu on the Keypad).

Using Output Contactors

The use of output contactors is permitted. It is recommended that this type of operation be limited to emergency use only or in a system where the drive can be inhibited before closing or opening this contactor.

Using Motor Chokes (output)

Installations with long cable runs may suffer from nuisance overcurrent trips, refer to Appendix E: “Technical Specifications” - Cabling Requirements for maximum cable lengths. A choke may be fitted in the drive output to limit capacitive current. Screened cable has a higher capacitance and may cause problems in shorter runs.

Frame	Parker SSD Drives Part Number
G	CO466709U073
H	CO466709U083
J	CO466250U012

Contact Parker SSD Drives for recommended choke values.

Using Multiple Induction Motors on a Single Drive

A single large drive can be used to supply several smaller induction motors provided that each individual motor has overload protection.

Note ***Conventional V/F control strategy must be enabled for use with parallel motors. (Sensorless vector control strategy cannot be used). See the VECTOR ENABLE parameter under VECTOR SET-UP menu at level 2.***

The drive must be rated to supply the **total motor current**. It is not sufficient to simply sum the power ratings of the motors, since the drive has also to supply the magnetising current for each motor.

Note that the overload device will not prevent the motor overheating due to inadequate cooling at low speed. Force vented motors may be required; consult your motor supplier.

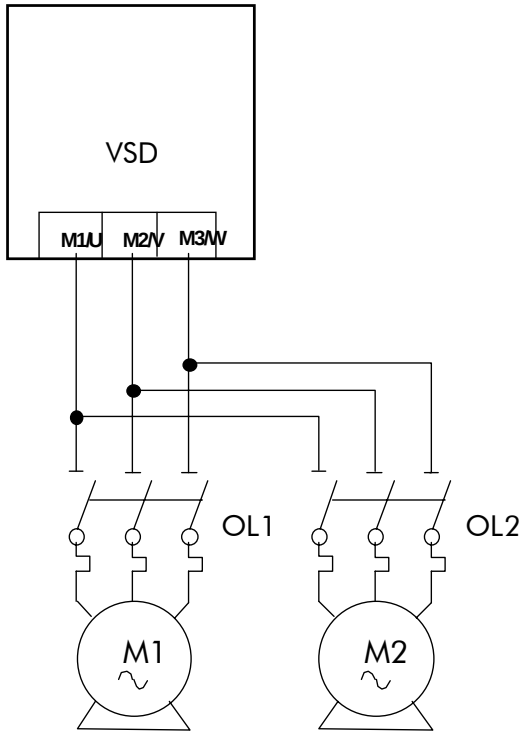

Figure 3.14 Single Drives supplying Multiple Motors

WARNING

All motors should be connected to the drive output before the START command is given.

Caution

Restrict the total cable length on multiple motor installations as follows:
50 metres with no output choke fitted,
300 metres with choke.

High Starting Torque

Applications requiring high motor starting torque (greater than 100% of rated torque) need careful setup of the drive voltage boost feature. Gradually increase the FIXED BOOST parameter in 1% steps until the drive generates sufficient starting torque.

It is important to use the minimum level of FIXED BOOST necessary to accelerate the load. Using a level of FIXED BOOST higher than necessary will lead to increased motor heating and increased risk of drive overload.

Setting the FIXED BOOST parameter level too high can also cause the drive current limit feature to operate. If this occurs, the drive will be unable to ramp up in frequency. The IT LIMITING diagnostic (INVERSE TIME function block) will indicate TRUE when the inverse time current limit feature is operating. Simply reducing the level of the FIXED BOOST parameter will remove this problem.

Note ***Motor torques greater than 100% require high currents to be drawn from the drive. Thus, the CURRENT LIMIT parameter (CURRENT LIMIT function block) will have to be set accordingly such that the drive current limit feature will not activate when accelerating the load.***

The best motor starting performance can be achieved by setting up the SLIP COMP function block, refer to the Appendix D: “Programming” - SLIP COMP. Also setting the BASE VOLTS parameter (VOLTAGE CONTROL function block) to 115.4% and the FREQ SELECT parameter (PATTERN GEN function block) to 3kHz, can help to start difficult loads in the most extreme cases.

890CD/SD 4-Q Regen AFE Applications

Introduction

A **4-Q REGEN** (4 Quadrant Regenerative) control mode is available on all 890CD Common Bus Drives and 890 Standalone Drives, provided that :

- the drive uses Software Version 1.x (1.8 or greater), or Software Version 3.x (Software Version 2.x does not support 4Q mode)

  AND

- **for Frame B-D**: the SETUP::MISCELLANEOUS::EMC CAPACITORS parameter is set to (1) NOT CONNECTED
- **for Frame E-K**: the drive displays “/007” in Block 12 of the (Europe) Product Code indicating that Special Option 7 is applied (“Y” cap disconnection)

IMPORTANT All drives **in a common DC link scheme using a 4-Q Regen front-end** MUST **have their internal EMC filter "Y" caps to earth (PE) removed.**

The **4-Q REGEN** control mode allows a single 890 to act as a 4-Q power supply unit that is capable of drawing (motoring) and supplying (regenerating) sinusoidal, near-unity power factor current from the supply.

The output from the 4-Q Regen drive acts as a DC supply which is used to power other drives on a common DC Bus system.

Advantages

Using the 890 as a 4-Q power supply in common DC Bus schemes provides the following advantages:

- Simplified approach to Common DC Link systems
- Allows standard 890 drive to act as 4-Q DC Link power supply unit
- Near-sinusoidal supply currents (Motoring and Regenerating)
- Near-unity power factor operation (0.99 or better)
- Low supply harmonics currents (helps to meet G5/4 and IEEE519)

WARNING!

890 drives operating in **4-Q REGEN** control mode are **NOT** suitable for use on systems where the mains supply (L1, L2, L3) is provided by a generator (where the supply cannot absorb the regenerated current).

4-Q Active Front End

The 4-Q Regen drive requires the following 4-Q Active Front End:

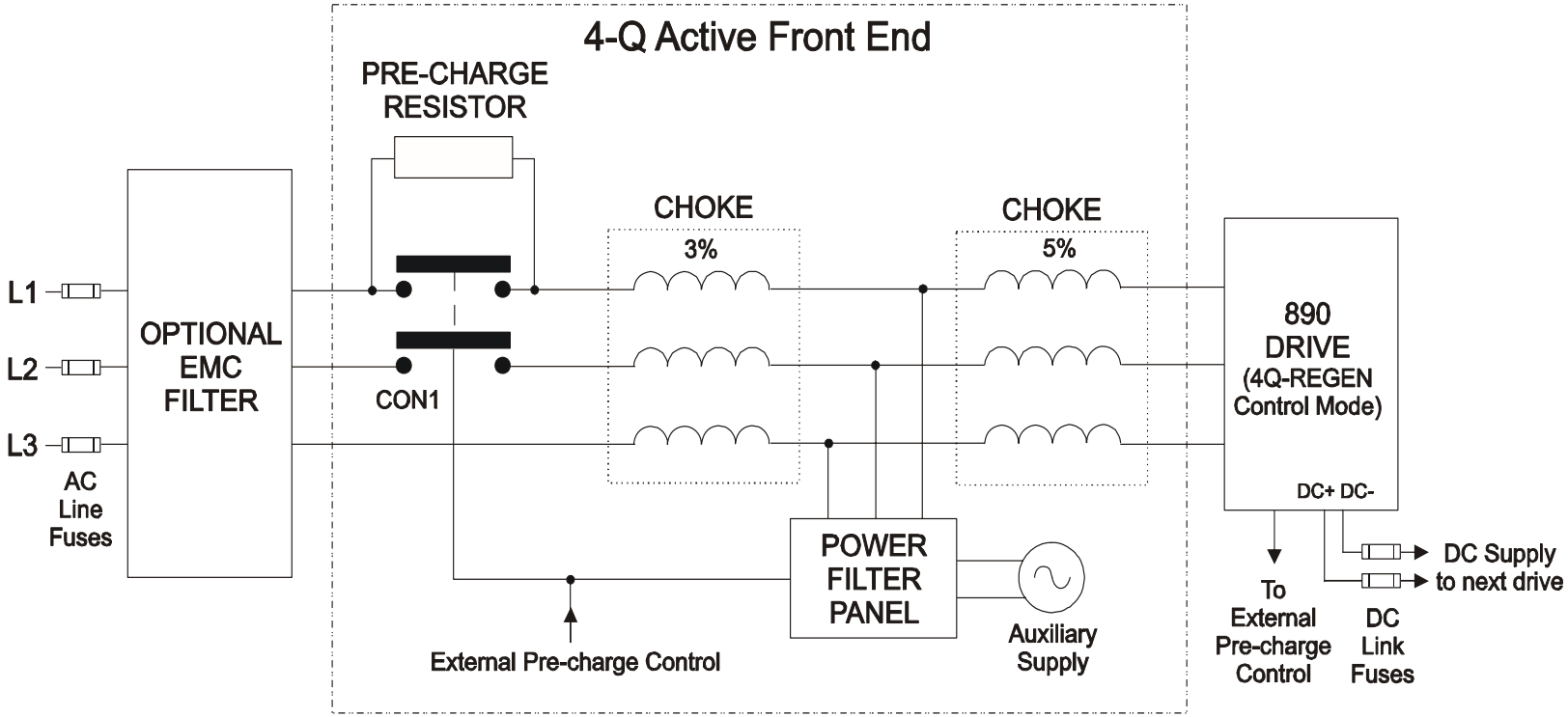

Notes:

Contactor CON1 is rated to match the 4-Q power supply drive current (AC1 rating)

The 3% and 5% line chokes are custom designed for this application. Refer to page 6-42.

Power Filter Panel				
Frame	**kW**	**Volts**	**Part Number 110V fans + control**	**Part Number 230V fans + control**
B	4	230	LA482467U004	LA482470U004
C	7.5	230	LA482467U011	LA482470U011
D	18.5	230	LA482467U018	LA482470U018
E	22	230	LA482467U030	LA482470U030
F	45	230	LA482467U055	LA482470U055
B	6	400	LA482468U006	LA482471U006
C	15	400	LA482468U018	LA482471U018
D	30	400	LA482468U037	LA482471U037
E	45	400	LA482468U055	LA482471U055
F	90	400	LA482468U110	LA482471U110
G	180	400	LA482468U220	LA482471U220
H	280	400	LA482468U315	LA482471U315
J	315	400	LA482468U355	LA482471U355
B	6	500	LA482469U006	LA482472U006
C	15	500	LA482469U018	LA482472U018
D	30	500	LA482469U037	LA482472U037
E	45	500	LA482469U055	LA482472U055
F	90	500	LA482469U110	LA482472U110
G	180	500	LA482469U220	LA482472U220
H	280	500	LA482469U315	LA482472U315
J	315	500	LA482469U355	LA482472U355

EMC Filtering

We recommend all 890 Regen systems meet the EMC product specific standard EN61800-3. To achieve this, an EMC filter is required. Refer to Chapter 5: "Associated Equipment" for details of suitable filters.

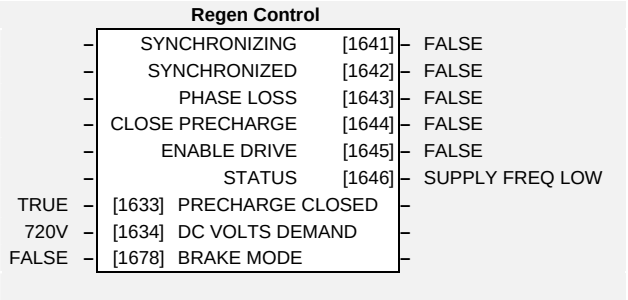

Contactor and Fusing

- Use AC Line Fuses to protect the 4-Q Regen drive. These fast, semiconductor protection fuses must be capable of withstanding the system AC supply voltage. Refer to Appendix E.
- The AC contactor, CON1, used in the external pre-charge circuit must have an AC1 or thermal rating of the constant torque current rating of the 4-Q Regen drive. Refer to page 6-39.
- Use DC Link fuses in both the DC+ and DC- lines to protect each drive connected to the common DC bus. The fuses must be of suitable current rating and capable of withstanding 1000Vdc . Although HRC fuses would be adequate, the high DC voltage requirement (1000Vdc) may limit the choice to semiconductor fuses. Refer to page 6-37.
- The DC contactor used in the Brake Mode system (refer to page 6-35) must have an adequate thermal rating for the regen current required. Typically the regen rating of the system, and hence the rating of the DC contactor and fuses, will be less than motoring requirement as the contactor should not open under load.

Drive Set-up

The 890 Common Bus drive must be set-up correctly to work in a 4-Q Regen Control/Common DC Bus Application.

Typically the system will contain an 890 4-Q Regen drive providing the 4-Q power supply, and one or more 890 drives on the common DC bus.

Settings

All 890CD and 890SD Drives	
ALL 890 drives in the system **MUST** have their internal EMC "Y" caps to earth disconnected.	
Set the demanded boosted DC link voltage (DC VOLTS DEMAND) appropriately for the drive voltage rating. This is given in the separate table below. Refer to Appendix D for a full description of the REGEN CONTROL function block parameters.	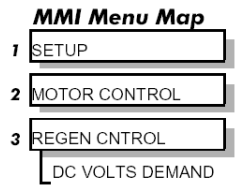
890 4-Q Regen Drive:	
Create an application using the DSE 890 Configuration Tool. Refer to page 6-29 for wiring details. sv 1.x **MMI Menu Map** 1 SETUP 2 MOTOR CONTROL 3 MOTOR DATA CONTROL MODE LEAKAGE INDUC sv 3.x **MMI Menu Map** 1 SETUP 2 MOTOR CONTROL 3 MOTOR DATA LEAKAGE INDUC sv 3.x **MMI Menu Map** 1 SETUP 2 DRIVE SETUP 3 DRIVE CONFIG CONTROL MODE Set the CONTROL MODE parameter to "4-Q REGEN". Set the LEAKAGE INDUC parameter to the value of the total line choke inductance. Refer to page 6-43.	

Other 890 Drives on the Bus	
Set the ENABLE parameter in the SLEW RATE LIMIT function block to FALSE. This disables ramp-hold during deceleration on high link volts feature.	MMI Menu Map 1 SETUP 2 MOTOR CONTROL 3 SLEW RATE LIMIT ENABLE
If in Volts/Hz motor control mode, the VOLTAGE MODE parameter in the VOLTAGE CONTROL function block **MUST** be set to FIXED. This will ensure the motor is not overfluxed by the boosted 720V DC Bus. Failure to do this may lead to motor overheating and possible burn out.	MMI Menu Map 1 SETUP 2 MOTOR CONTROL 3 VOLTAGE CONTROL VOLTAGE MODE

Setting for DC VOLTS DEMAND Parameter

Drive Voltage Rating (V)	Under Volts Trip Level (V)	Over Volts Trip Level (V)	Recommended DC VOLTS DEMAND
380V – 460V	410V	820V	720V
220V – 240V	205V	410V	370V

Create DSE 890 Application

Use the DSE 890 Configuration Tool to configure the drive for the 4Q Regen application. A suggested wiring diagram for the 890 control board is shown below.

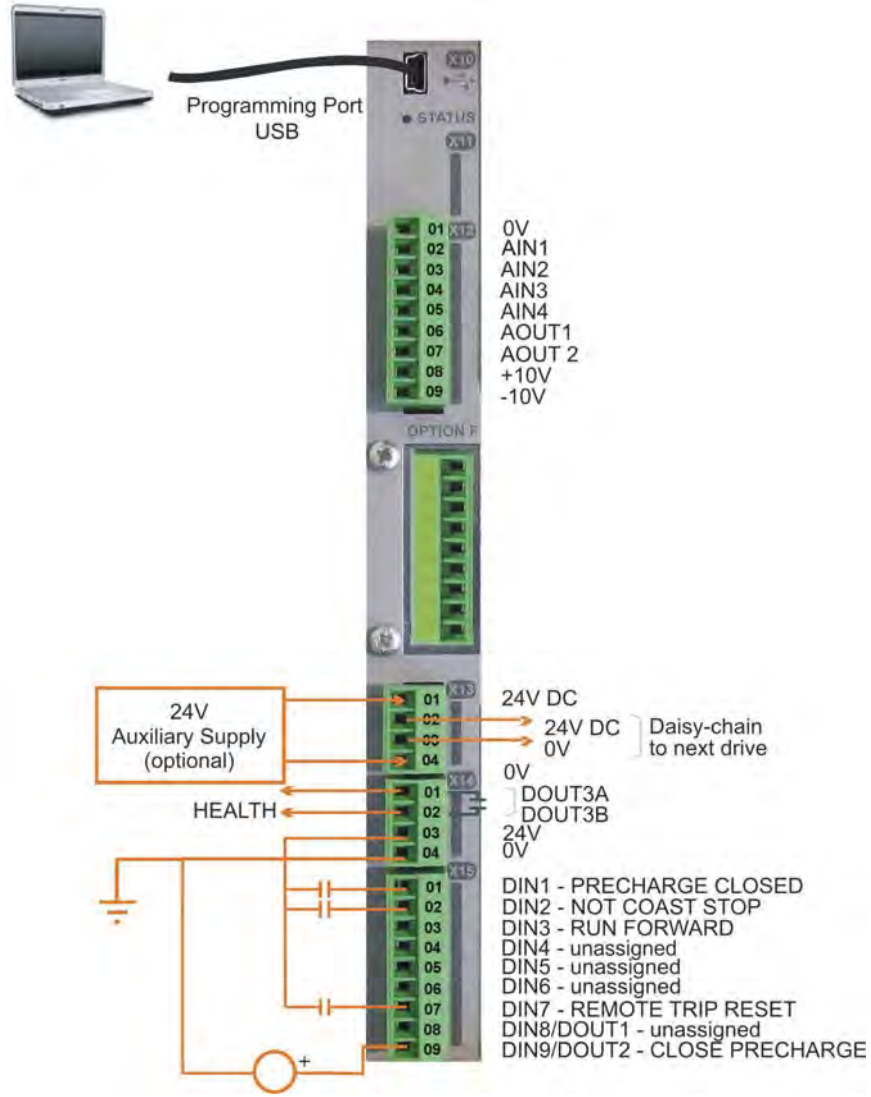

Connection Table		PREF
DIN1	to SETUP::MOTOR CONTROL::REGEN CNTRL::PRECHARGE CLOSED	114.01
DIN2	to SETUP::SEQ & REF::SEQUENCING LOGIC::NOT COAST STOP	92.08
DIN3	to SETUP::SEQ & REF::SEQUENCING LOGIC::RUN FORWARD	92.01
DIN7	to SETUP::SEQ & REF::SEQUENCING LOGIC::REM TRIP RESET	92.10
DOUT2	to SETUP::MOTOR CONTROL::REGEN CNTRL::CLOSE PRECHARGE	114.12

REGEN CONTROL Function Block, for example:

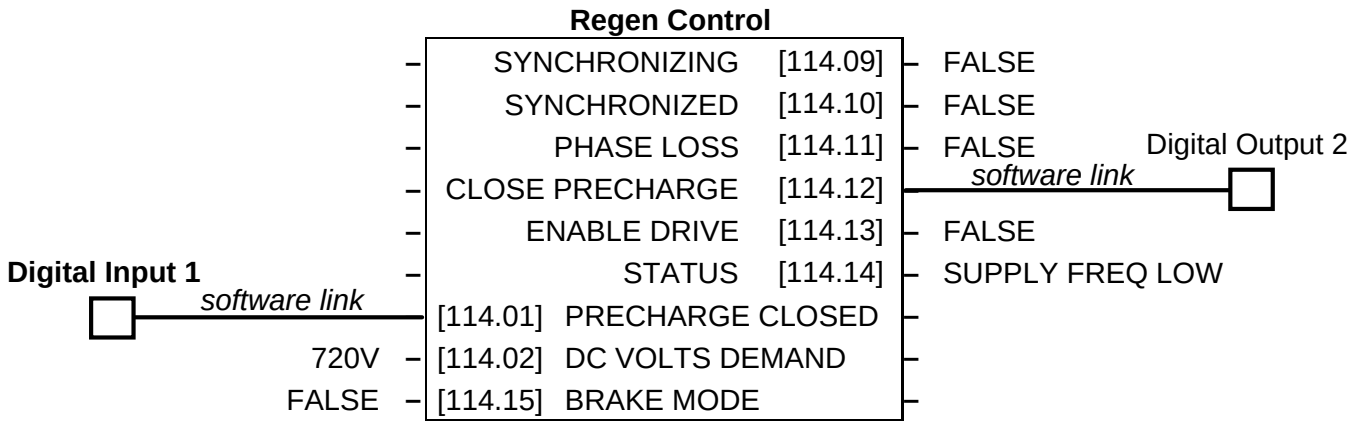

A Single Motor System

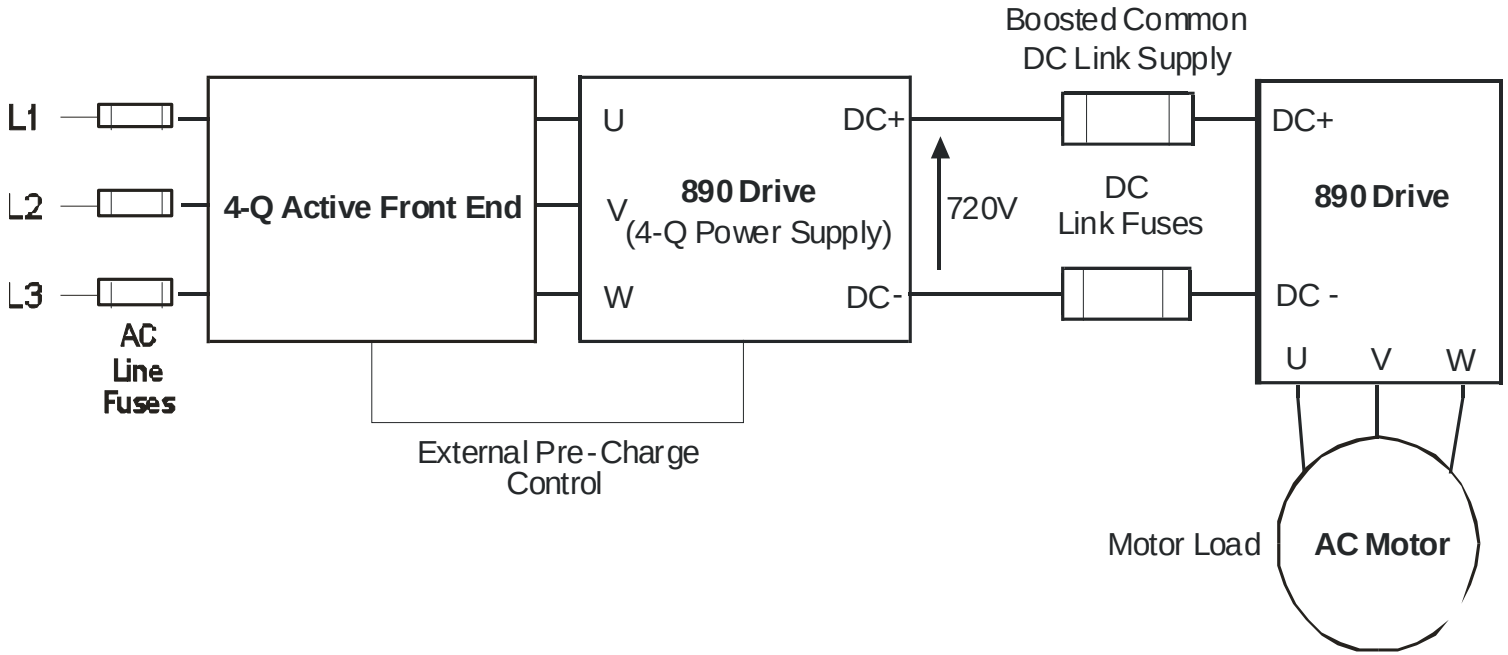

The simplest configuration for 4-Q Regen control is a single 890 Regen drive acting as the unity power factor supply, connected via the DC link to another 890 driving the application.

Applications of single motor 4-Q Regen systems include :

- Hoist and Elevators
- Dynamometer test rigs
- Unwind Stands
- Installations that would otherwise require a Harmonic Power Filter

In this system, the two 890 drives are matched in power. The 4-Q Regen drive supplies the full motoring and regenerating requirement of the load.

Additional external equipment required by the 4-Q Regen drive includes :

- EMC Filter
- AC Line Fuses
- DC Link Fuses

No extra hardware is required to detect the rotation, frequency and phase of the mains supply. Also, no dynamic braking resistor is required.

When mains power is applied to the 4-Q Regen drive, the DC link slowly charges through the external pre-charge circuit and the drive's internal power supply will start in the normal way. If the 4-Q Regen drive is healthy and the Run signal is applied, it will synchronise to the mains supply (phase, rotation and frequency). This process takes approximately 100ms. After synchronisation, the DC link on the common bus is boosted to approximately 720V (on a 400V product). This high value of DC link volts is required for successful regen operation.

A Multi-Motor System

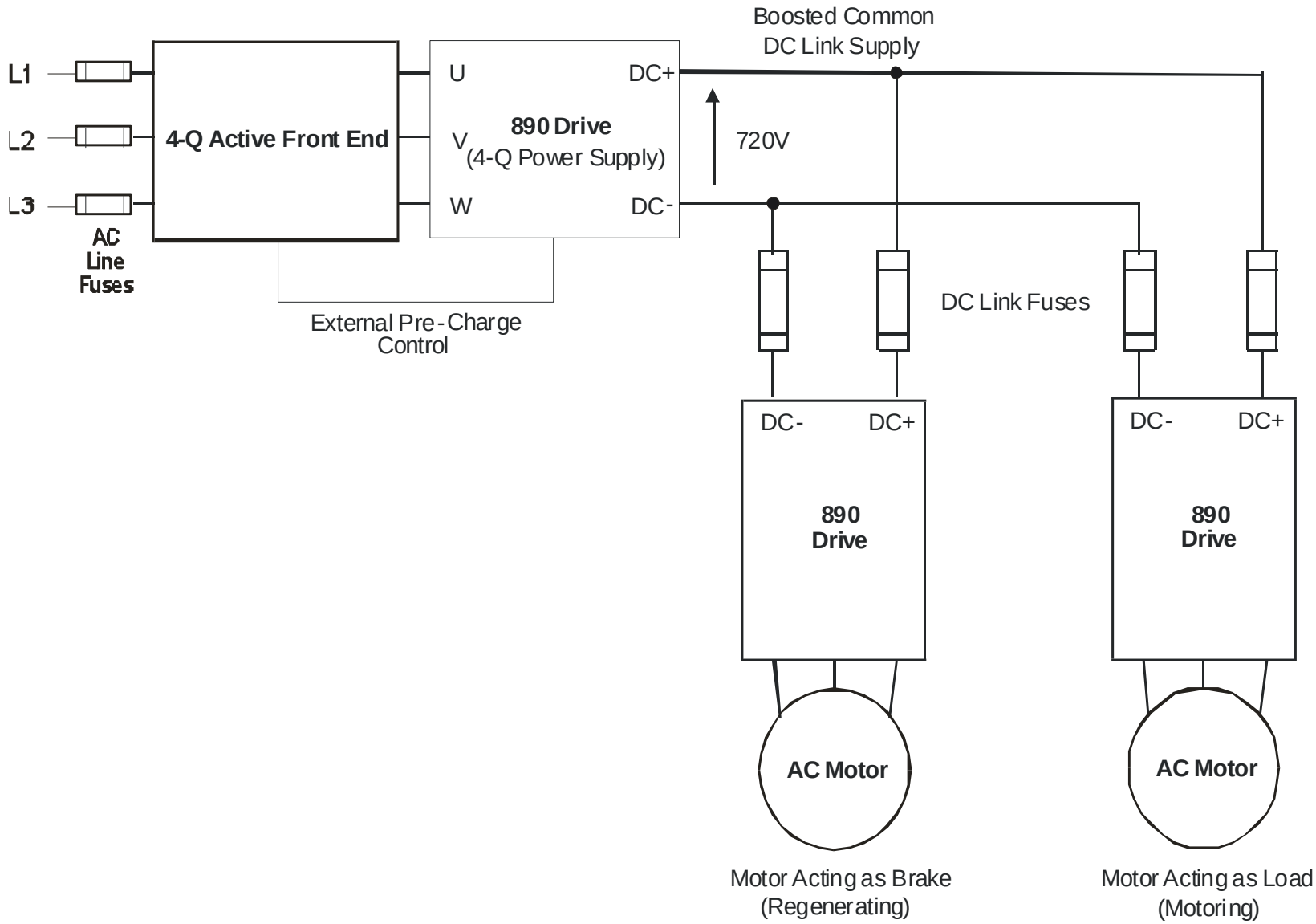

Operating the Drive

In many applications, the total power consumed by the system is less than the installed power of the drives. This is because some drives are motoring (eg. winders) and some are regenerating (eg. unwinders). In these situations it is convenient to connect the drives on a common DC link.

In this system, the 4-Q Regen drive supplies the motoring and regenerating requirement of the load.

Additional external equipment required by the 4-Q Regen drive includes :

- EMC Filter
- AC Line Fuses
- DC Link Fuses

No extra hardware is required to detect the rotation, frequency and phase of the mains supply. Also, no dynamic braking resistor is required.

The 4-Q Regen drive draws sinusoidal, unity power factor current from the supply and only has to be rated for either the power consumed or supplied by the system, or by the system braking requirements, whichever is the larger.

Dynamic Braking (eg. for Emergency Stopping purposes) can still be used in this control mode if required.

A Smart Brake System

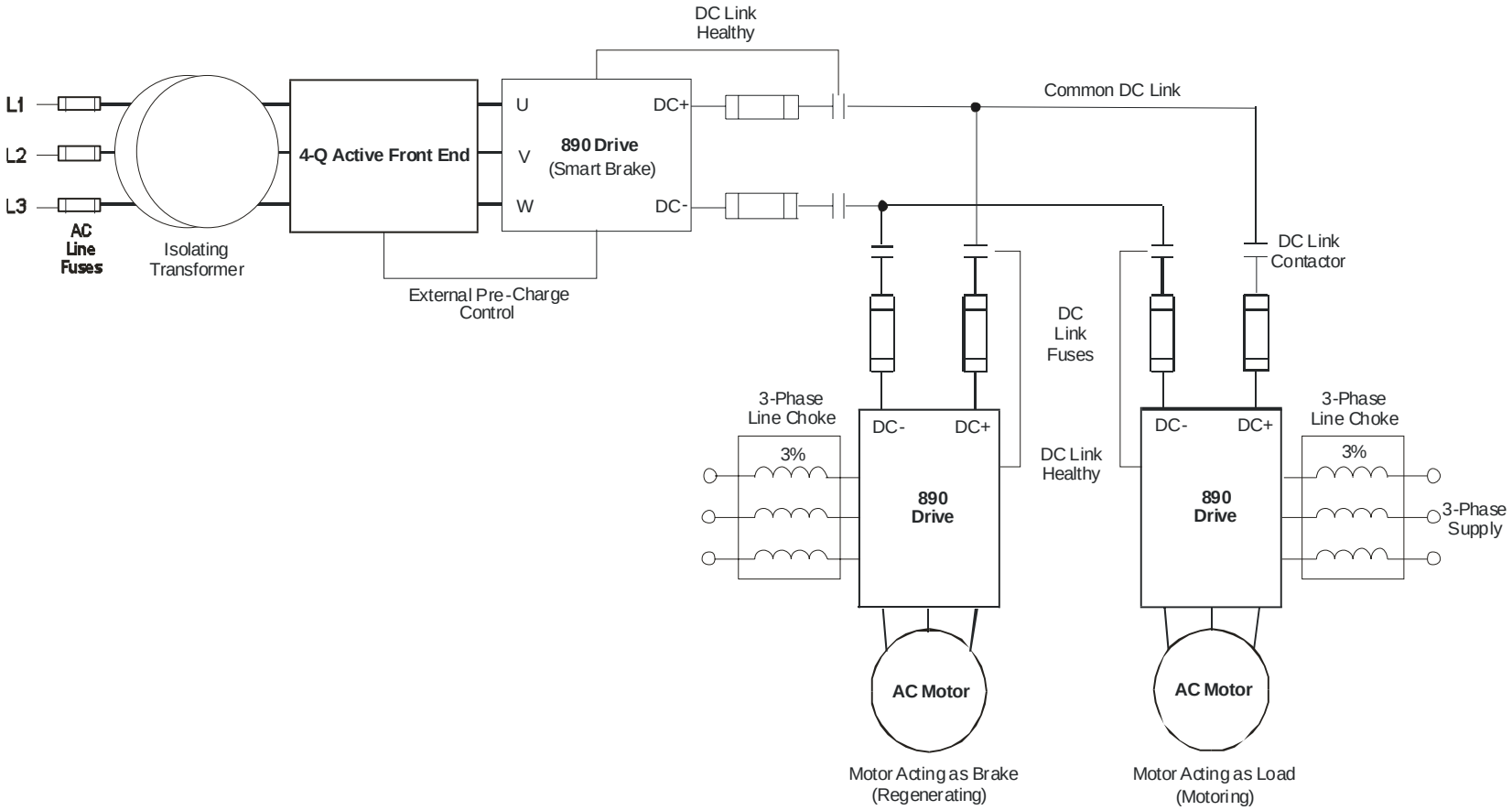

IMPORTANT **It is essential to use an isolation transformer on the supply to the Smart Brake drive, as shown above.**

The 4-Q Regen drive can act as a Smart Brake:

4-Q Regen Drive:

MMI Menu Map

1 SETUP
2 MOTOR CONTROL
3 REGEN CNTROL
BRAKE MODE

- In addition to the settings given in "Drive Set-up", page 7-26, set the BRAKE MODE parameter in the REGEN CONTROL function block to TRUE.

In this system, the 4-Q Regen drive supplies the regenerating requirement of the load.

Additional external equipment required by the 4-Q Regen drive includes:

- EMC Filter
- AC Line Fuses
- DC Link Fuses

During motoring operation, the drives on the common link are supplied via their own internal 3-phase diode bridge. The 4-Q Regen drive tracks the mains supply but does not supply motoring power to the common DC Link.

During regeneration, the DC link voltage will rise and trigger the 4-Q Regen drive to return the excess power to the mains (sinusoidal current, unity power factor).

Thus, the 4-Q Regen drive acts as a smart, no loss, Dynamic Brake.

The BRAKE MODE allows the level of regeneration (braking) capacity in the system to be rated differently from the required motoring capacity.

When using the Brake Mode, each drive is responsible for pre-charging its own DC Link. When an individual drive is pre-charged and healthy, it connects itself on to the common DC Bus via a DC contactor.

The drives disconnect from the common bus if a trip occurs.

DC Link Fuses

Below is a list of parts for the DC Link Fuses. Refer to the Electrical Ratings tables for Quadratic Duty motor powers. Select the correct part for the drive's Motor Power.

Motor Power (Constant Duty @ 400V) (kW/Hp)	Frame Size	DC Fuse Rating (A)	DC Fuse Type	Fuse	Fuse Switch	Fuse Holder
0.75/1	B	15	CO89495J	CS481079	CS481099	CS481039
1.5/2	B	15	CO89495J	CS481079	CS481099	CS481039
2.2/3	B	15	CO89495J	CS481079	CS481099	CS481039
4/5	B	15	CO89495J	CS481079	CS481099	CS481039
5.5/7.5	C	40	SO86795J	CS481080	CS481099	CS481039
7.5/10	C	40	SO86795J	CS481080	CS481099	CS481039
11/15	C	40	SO86795J	CS481080	CS481099	CS481039
15/20	D	80	FWP 80BI	CS481081	CS481088	
18.5/25	D	80	FWP 80BI	CS481081	CS481088	
22/30	D	80	FWP 80BI	CS481081	CS481088	
30/40	E	150	IXL70F150	CS481082	CS481088	
37/50	E	150	IXL70F150	CS481082	CS481088	
45/60	E	150	IXL70F150	CS481082	CS481088	
55/75	F	300	IXL70F300	CS481083	CS481088	

Motor Power (Constant Duty @ 400V) (kW/Hp)	Frame Size	DC Fuse Rating (A)	DC Fuse Type	Fuse	Fuse Switch	Fuse Holder
75/100	F	300	IXL70F300	CS481083	CS481088	
90/125	F	300	IXL70F300	CS481083	CS481088	
90/150	F	300	IXL70F300	CS481083	CS481088	
110/150	G	350	IXL70F350	CS481084	CS481088	
132/200	G	600	IXL70F600	CS481085	CS481088	
160/250	G	600	IXL70F600	CS481085	CS481088	
200/300	H	600	IXL70F600	CS481085	CS481088	
220/350	H	800	FWP 800AI	CS481086	CS481088	
250/400	H	800	FWP 800AI	CS481086	CS481088	
280/450	H	800	FWP 800AI	CS481086	CS481088	
315/500	J	900	FWP 900AI	CS481087	CS481088	

Pre-Charge Sizing

The external pre-charge contactor is required to carry the full load current rating (including overload) of the 4-Q Regen drive. Thus, it must have an AC1 rating of the Constant Duty current rating of the drive. Refer to the Electrical Ratings tables for Constant Duty motor powers.

We recommend that standard SSD Dynamic Braking resistors are used for the external pre-charge circuit. The continuous and peak power capabilities of these resistors are given below:

SSD Part №	Resistance (Ω)	Continuous Power Rating (W)	Peak Power Rating (kW)
CZ389853	100	100	2.5
CZ463068	56	200	5
CZ388396	36	500	12.5

The recommended pre-charge resistor networks are shown in the table below. The table indicates the amount of total DC Link capacitance the network can charge for a given supply voltage.

External Pre-Charge Network	Continuous Power Rating (W)	Impulse Joule Rating (J)	Pre-Charge Capability (µF) @ $240V_{rms}$ +10%	Pre-Charge Capability (µF) @ $460V_{rms}$ +10%
100 Ohm 100W	100	2,500	35,000	9,700
56 Ohm 200W	200	5,000	71,000	19,500
36 Ohm 500W	500	12,500	179,000	48,800

The internal DC Link Capacitance for each drive in the 890 range is given in the table below:

Drive Power (kW/Hp)	230V Units Nominal		400V Units Nominal		500V Units Nominal	
	Size	µF	Size	µF	Size	µF
0.55/0.75	B	470			B	235
1.1/1.5	B	470			B	235
1.5/2	B	940			B	235
2.2/3	B	940			B	235
4/5	B	1410			B	470
5.5/7.5	C	4200			B	705
7.5/10	C	4200			B	705
11/15					C	1400
15/20					C	2100
18.5/25					D	2100
22/30					D	2100
30/40					D	2800
37/50			E	3000	E	3000
45/60			E	3500	E	3500
55/75			F	5600	F	5600
75/100			F	5600	F	5600

Drive Power (kW/Hp)	230V Units Nominal		400V Units Nominal		500V Units Nominal	
	Size	µF	Size	µF	Size	µF
90/125			F	5600	F	5600
-/150			*US/Canada only*		F	5600
110/150			G	6600		
132/200			G	9900		
160/250			G	13500		
180/300			G	13500		
200/300			H	14850		
220/350			H	14850		
250/400			H	20250		
280/450			H	20250		
315/500			J	19800		

Simply sum the DC Link capacitance for all the drives on the common DC Link and select the appropriate pre-charge network.

For example: a system comprising 5 x 37kW, 400V Frame E drives would have a total DC Link capacitance of:

$$C_{Total} = 5 \times 3000 \mu F = 18{,}000 \mu F$$

This is less than 19,500µF and thus a 56Ω, 200W (CZ463068) resistor will be adequate.

3-Phase Choke Sizing

One of the benefits of the 890 4-Q Regen drive is the reduction in the levels of harmonic currents drawn from the supply. The total harmonic distortion (THD) of the mains current is related to the PWM switching frequency, the supply voltage, the supply frequency and the inductance of the 3-phase line choke. The maximum allowed PWM carrier frequency in non-overload conditions, for each frame size is given below:

890 Frame Size	PWM Carrier Frequency
B to F	3kHz
G and H	2.5kHz
J	2kHz

The IEEE 519 standard (IEEE Standard Practices and Requirements for Harmonic Control in Electrical Power Systems) requires a THD of current of 5%. The tables below show the recommended 3-phase line chokes (5% and 3% in series) and expected THD of current for 400V and 230V drives.

The PWM switching produces high levels of harmonic current in the 3% chokes. It is essential to have these properly rated to avoid significant overheating. Suitable chokes have been developed for Parker SSD Drives and their Part Numbers are provided below.

5% Choke

Drive Frame Size	Motor Power (kW/Hp)	Input Voltage (V)	Choke	Inductance (μH)	Currents			
					50Hz	1kHz	2.5kHz	Sum
B	4/5	230	CO468342U004	1424	14.85	0.30	2.72	16
C	7.5/10	230	CO468342U011	839	25.20	0.50	4.61	26
D	18.5/25	230	CO468342U018	346	61.20	1.22	11.20	63
E	22/30	230	CO468342U030	294	72.00	1.44	13.18	74
F	45/60	230	CO468342U055	153	138.60	2.77	25.36	141
B	6/10	400	CO468326U006	2918	12.60	0.25	2.31	13
C	15/20	400	CO468326U018	1362	27.00	0.54	4.94	28
D	30/40	400	CO468326U037	693	53.10	1.06	9.72	54
E	45/60	400	CO468326U055	470	78.30	1.57	14.33	80
F	90/150	400	CO468326U110	227	162.00	3.24	29.65	165
G	180/300	400	CO468326U220	114	324.90	6.50	59.46	331
H	280/450	400	CO468326U315	79	468.00	9.36	85.64	476
J	315/500	400	CO468326U355	70	531.00	10.62	97.17	540

3% Choke

Drive Frame Size	Motor Power (kW/Hp)	Input Voltage (V)	Choke	Inductance (μH)	Currents			
					50Hz	1kHz	2.5kHz	Sum
B	4/5	230	CO468341U004	854	14.95	0.39	0.00	15
C	7.5/10	230	CO468341U011	503	25.38	0.66	0.00	26
D	18.5/25	230	CO468341U018	208	61.63	1.59	0.00	62
E	22/30	230	CO468341U030	177	72.50	1.87	0.00	73
F	45/60	230	CO468341U055	92	139.57	3.60	0.00	140
B	6/10	400	CO468325U006	1750	12.69	0.33	0.00	13
C	15/20	400	CO468325U018	817	27.19	0.70	0.00	28
D	30/40	400	CO468325U037	416	53.47	1.38	0.00	54
E	45/60	400	CO468325U055	282	78.85	2.04	0.00	79
F	90/150	400	CO468325U110	137	163.13	4.21	0.00	164
G	180/300	400	CO468325U220	68	327.17	8.45	0.00	328
H	280/450	400	CO468325U315	48	471.28	12.17	0.00	472
J	315/500	400	CO468325U355	42	534.72	13.81	0.00	535

Lower values for THD of current can be achieved by adding extra line impedance.

Chapter 7
The Keypad

In this chapter, learn about the control keys and keypad indications. The main menu maps are shown here, but for details of sub-menus refer to Chapter 8.

- Introduction
- 6901 Keypad
- Remote Mounting the Keypad

Introduction

The 890SD unit is fitted with the 6901 Keypad.

The 6901 Keypad can be mounted up to 3 metres away from the 890 using the optional panel mounting kit with connecting lead: refer to "Remote Mounting the Keypad", page 7-27.

6901

The keypad displays the following information:

890SD + OPERATOR, DIAGNOSTICS, QUICK SETUP, SETUP & SYSTEM menus *(SETUP menu lists all parameters available in the DSE 890 Configuration Tool)*

6901 Keypad

The 6901 Keypad (Man-Machine Interface, MMI) provides for local control of the drive, monitoring, and complete access for application programming.

To display the Software Version:

Press and hold E to display software version. Time-out or press M.

To Start in Local Mode:

Press

To Stop in Local Mode:

Press

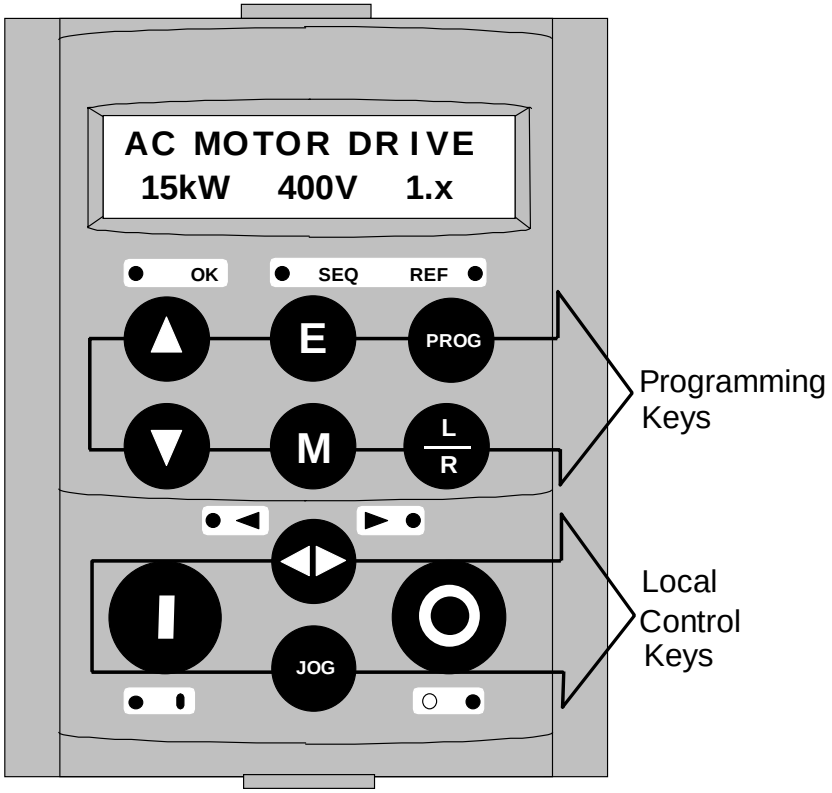

Initial Power-Up Conditions

The Keypad will display the Operator menu on the 890SD Standalone Drive.

Control Key Definitions

Keys for Programming the Drive

UP ▲	*Navigation* - Moves upwards through the list of parameters or menus *Parameter* - Increments the value of the displayed parameter. *Command Acknowledge* - Confirms action when in a command menu.
DOWN ▼	*Navigation* - Moves downwards through the list of parameters or menus *Parameter* - Decrements the value of the displayed parameter.
ESCAPE E	*Navigation* - Displays the previous level's Menu. *Parameter* - Returns to the parameter list. *Trip Message* - Clear the Trip or Error message from the display.
MENU M	*Navigation* - Displays the next Menu level, or the first parameter of the current Menu. *Parameter* - Allows a writable parameter to be modified (this is indicated by → appearing on the left of the bottom line). Hold to display the PREF.
PROG PROG	*Navigation* - Toggles between current locations within the Operator menu and any other menu.
LOCAL/ REMOTE L/R	*Control* - Toggles between Remote and Local Mode for both Start/Stop (Seq) and Speed Control (Ref). When toggling, the display automatically goes to the relevant SETPOINT screen, and the SETPOINT (LOCAL) screen will have the s and t keys enabled to alter the setpoint.

Keys for Operating the Drive Locally

FORWARD/ REVERSE	*Control* - Changes the direction of motor rotation. Only operates when the drive is in Local Speed Control mode.
JOG	*Control* - Runs the motor at a speed determined by the JOG SETPOINT parameter. When the key is released, the drive returns to “stopped”. Only operates when the drive is “stopped“ and in Local Start/Stop mode.
RUN	*Control* - Runs the motor at a speed determined by the LOCAL SETPOINT or REMOTE SETPOINT parameter. *Trip Reset* - Resets any trips and then runs the motor as above. Only operates when the drive is in Local Start/Stop (Seq) mode.
STOP/RESET	*Control* - Stops the motor. Only operates when the drive is in Local Sequence mode. *Trip Reset* - Resets any trips and clears displayed message if trip is no longer active.

The L/R Key

The **L/R** key (LOCAL/REMOTE) toggles between Remote and Local Mode. In doing so, the view of the SETPOINT parameter in the OPERATOR menu toggles between SETPOINT (LOCAL) and SETPOINT (REMOTE). The default is for the SETPOINT (REMOTE) parameter to be displayed.

Note ***A different naming convention is applied in the OPERATOR menu for these parameters when displayed as the first parameter entry:***

- *REMOTE SETPOINT is displayed as SETPOINT (REMOTE)*
- *LOCAL SETPOINT is displayed as SETPOINT (LOCAL)*
- *COMMS SETPOINT is displayed as SETPOINT (COMMS)*
- *JOG SETPOINT is displayed as SETPOINT (JOG)*

Pressing the L/R key when in Remote mode takes you directly to the SETPOINT (LOCAL) parameter with the Edit mode enabled. Press the PROG key to return to the previous display.

The PROG Key

The **PROG** key toggles between the OPERATOR menu and any other menu, remembering and returning to previous positions in each menu. As you press the **PROG** key, the title of the menu you are about to enter is displayed, i.e. OPERATOR or for example DIAGNOSTICS. Releasing the key clears the display and releases you into that menu.

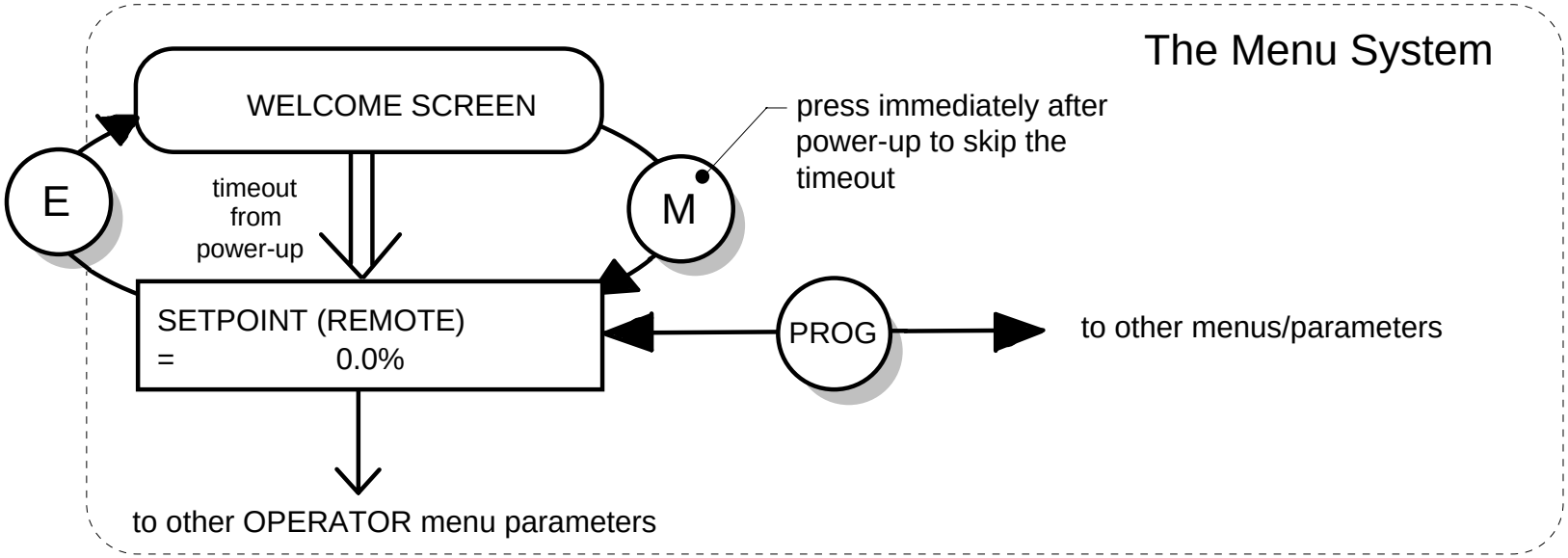

Holding the PROG key for approximately three seconds takes you to the SAVE CONFIG menu. Refer to “How to Save the Application”, page 7-17.

LED Indications

There are seven LEDs that indicate the status of the drive. Each LED is considered to operate in three different ways:

OFF

FLASH

ON

The LEDs are labelled HEALTH, LOCAL (as SEQ and REF), RUN, STOP, FWD and REV. Combinations of these LEDs have the following meanings:

HEALTH	RUN	STOP	Drive State
FLASH	FLASH	FLASH	Re-Configuration
FLASH	OFF	ON	Tripped
ON	OFF	ON	Stopped
ON	OFF	FLASH	Stopping
ON	FLASH	OFF	Running with zero speed demand or enable false or contactor feedback false
ON	ON	OFF	Running
ON	ON	OFF	Running
ON	FLASH	FLASH	Autotuning
FLASH	FLASH	ON	Auto Restarting, waiting for trip cause to clear
FLASH	FLASH	OFF	Auto Restarting, timing

FWD	REV	Forward / Reverse State
●	○	Requested direction and actual direction are forward
○	●	Requested direction and actual direction are reverse
○●	○	Requested direction is forward but actual direction is reverse
○	○●	Requested direction is reverse but actual direction is forward

LOCAL SEQ	LOCAL REF	Local / Remote Mode
○	○	Start/Stop (Seq) and Speed Control (Ref) are controlled from the terminals
●	○	Start/Stop (Seq) is controlled using the RUN, STOP, JOG and FWD/REV keys. Speed Control (Ref) is controlled from the terminals
○	●	Start/Stop (Seq) is controlled from the terminals Speed Control (Ref) is controlled using the up (s) and down (t) keys
●	●	Start/Stop (Seq) and Speed Control (Ref) are controlled using the Keypad keys

The Menu System

The unit will initialise in Remote Mode from factory conditions. The Keypad will display the Operator Menu. Each menu contains parameters.

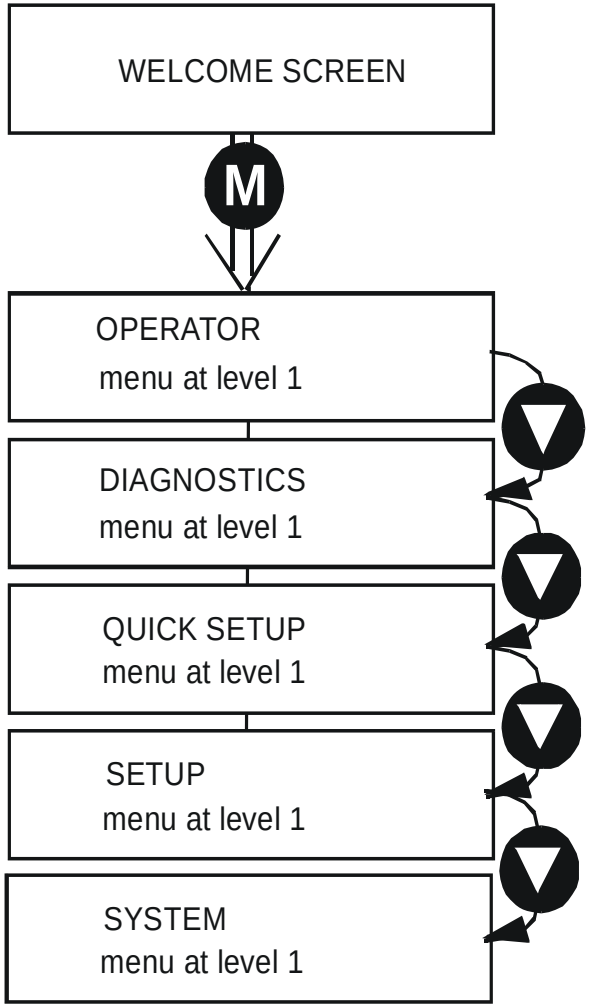

Welcome Screen Displays the software version of the unit

From the Welcome Screen, the display times-out (alternatively you can press the M key) to show the first of 4 menus:

Operator A customised view of selected parameters contained in the SETUP menu. Refer to Chapter 8.

Diagnostics A view of important diagnostic parameters contained in the SETUP menu. Refer to Chapter 8.

Quick Setup A quick-setup list of the most commonly used configuration parameters. Refer to Chapter 8.

Setup Contains all the function blocks parameters for programming your application. Refer to Appendix D.

System Application "save" and macro selection.

The Menu System Map

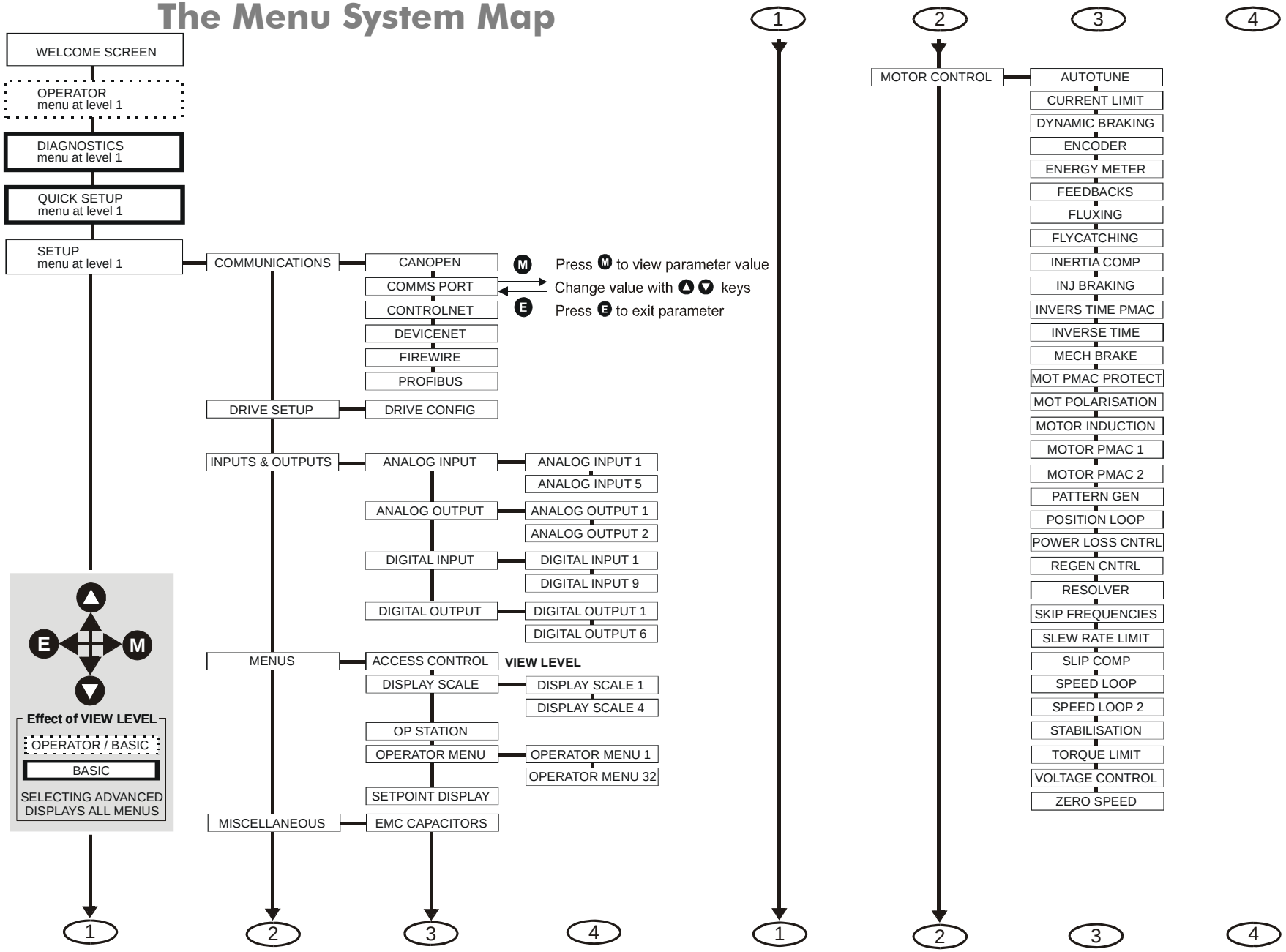

The Menu System Map continued

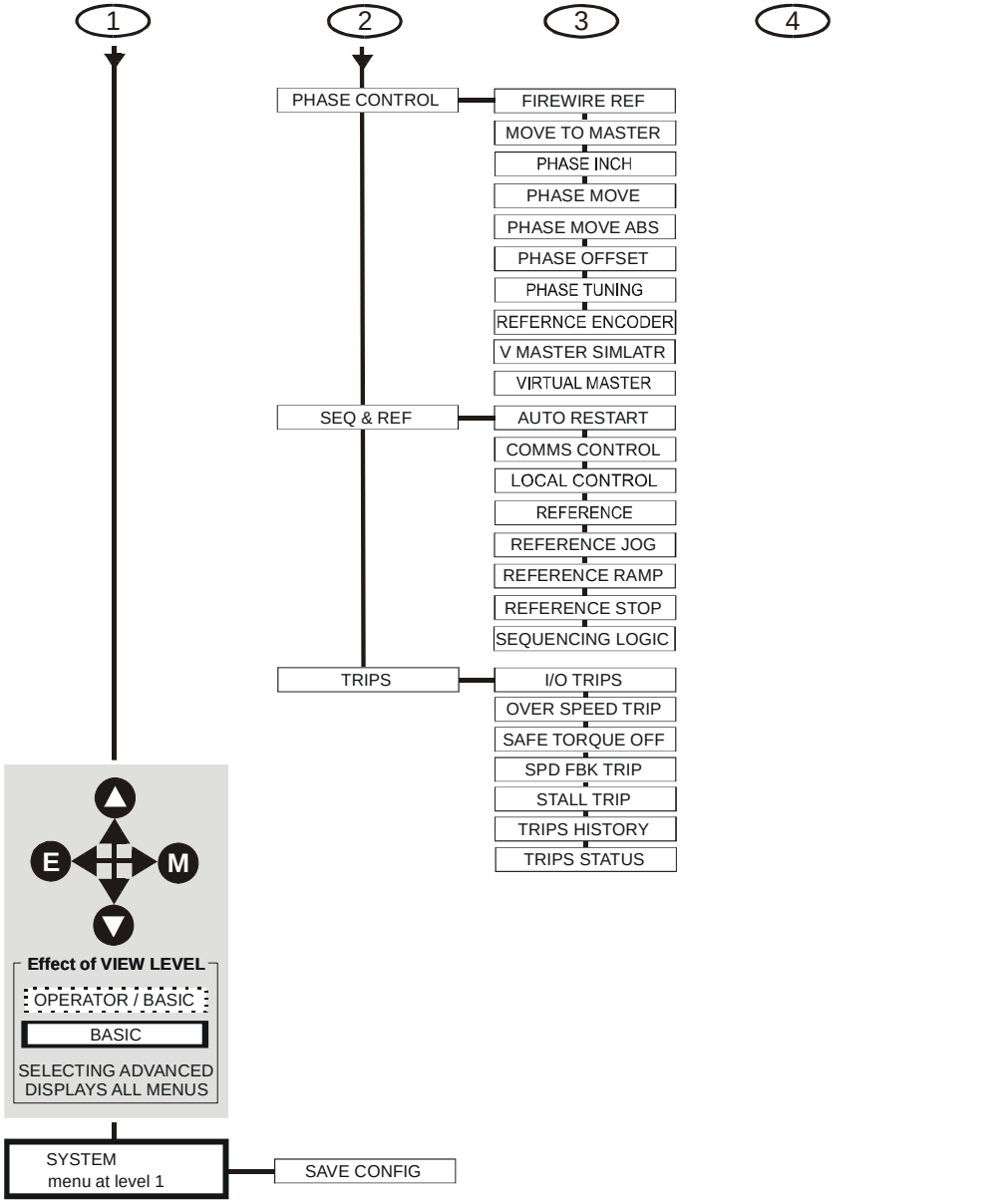

Navigating the Menu System

On power-up, the Keypad defaults into the OPERATOR menu, timing out from the Welcome screen. You can skip the timeout by pressing the M key immediately after power-up which will take you directly to the OPERATOR menu.

The menu system can be thought of as map which is navigated using the four keys shown opposite.

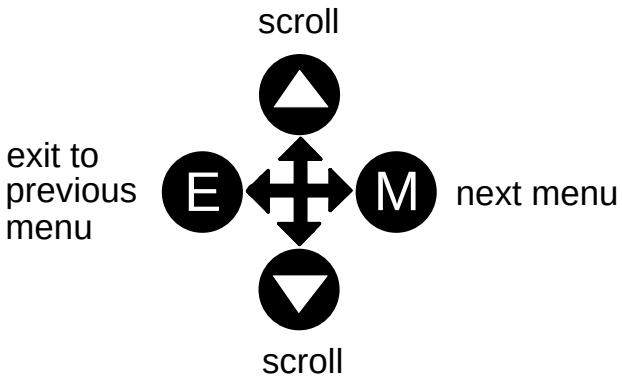

NAVIGATING THE MENU

Keys E and M navigate through the menu levels.
The up (▲) and down (▼) keys scroll through the Menu and Parameter lists.

Refer to “The Menu System Map” to see how the full menu is mapped.

HINT: Remember that because the Menu and Parameter lists are looped, the ▲ key can quickly move you to the last Menu or Parameter in the loop.

Alert Message Displays

A message will be displayed on the Keypad when either:

- A requested operation is not allowed:
  The top line details the illegal operation, while the bottom line gives the reason or cause. See example opposite.

```
* KEY INACTIVE *
REMOTE SEQ
```

- The drive has tripped:
  The top line indicates a trip has occurred while the bottom line gives the reason for the trip. See example opposite.

```
*** TRIPPED ***
HEATSINK TEMP
```

Most messages are displayed for only a short period, or for as long as an illegal operation is tried, however, trip messages must be acknowledged by pressing the **E** key.

Experience will show how to avoid most messages. They are displayed in clear, concise language for easy interpretation. Refer to Chapter 9: “Trips and Fault Finding” for trip messages and reasons.

Selecting Local or Remote Mode

The unit can operate in one of two ways:

Remote Mode: Remote control using digital and analog inputs and outputs

Local Mode: Providing local control and monitoring of the drive using the Keypad

Local control keys are inactive when Remote Mode is selected.

Note ***You can only change between Local and Remote Mode when the unit is "stopped".***

Remote to Local Mode:

To toggle between Modes:

Press L/R

Local to Remote Mode:

To toggle between Modes:

Press L/R

Refer to "The L/R Key", page 7-6.

How To Change a Parameter Value

You can change the values of parameters stored in the OPERATOR, QUICK SETUP and SETUP menus. Refer to Chapter 8 for further information.

- View the parameter to be edited and press M to display the parameter's value.
- Select the digit to be changed (pressing the M key moves the cursor from right to left).
- Use the ▲ ▼ keys to adjust the value. Hold the key momentarily to adjust the value marginally, or hold the key to make rapid changes; the rate of change varies with the time held.
- Press E to return to the parameter display.

How to Save the Application

The SAVE menu, available in all menu levels, is used to save any changes you make to the Keypad settings.

Press the UP key as instructed to save all parameters. Values are stored during power-down.

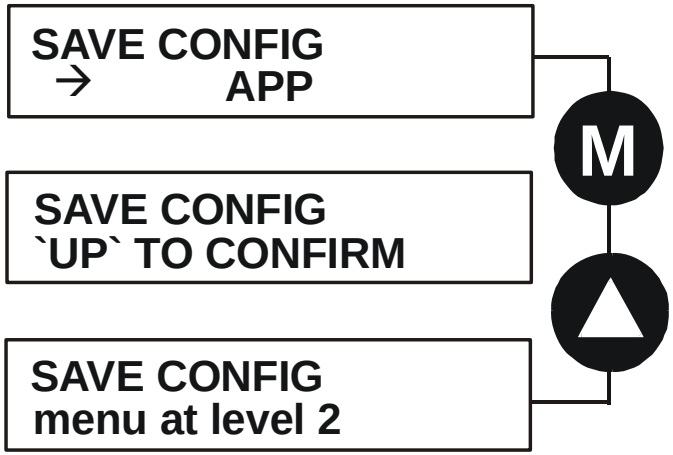

Special Menu Features

Selecting the Menu Level

MMI Menu Map

1 QUICK SETUP

VIEW LEVEL

For ease of operation there are three `viewing levels' for the Keypad. The setting for the VIEW LEVEL parameter decides how much of the menu system will be displayed. The choice of menu for each has been designed around a type of user, hence we have the Operator, Basic and Advanced viewing levels.

In the QUICK SETUP menu, press the ▲ key to quickly move to VIEW LEVEL, the last parameter in the menu.

Note ***The contents of the OPERATOR menu remains unchanged for all view levels.***

Refer to "The Menu System Map", page 7-11 to see how VIEW LEVEL changes the menu.

Quick Save Feature

From anywhere in the menu system, hold down the **PROG** key for approximately 3 seconds to move quickly to the SAVE CONFIG menu. You can save your application and return conveniently to your original display.

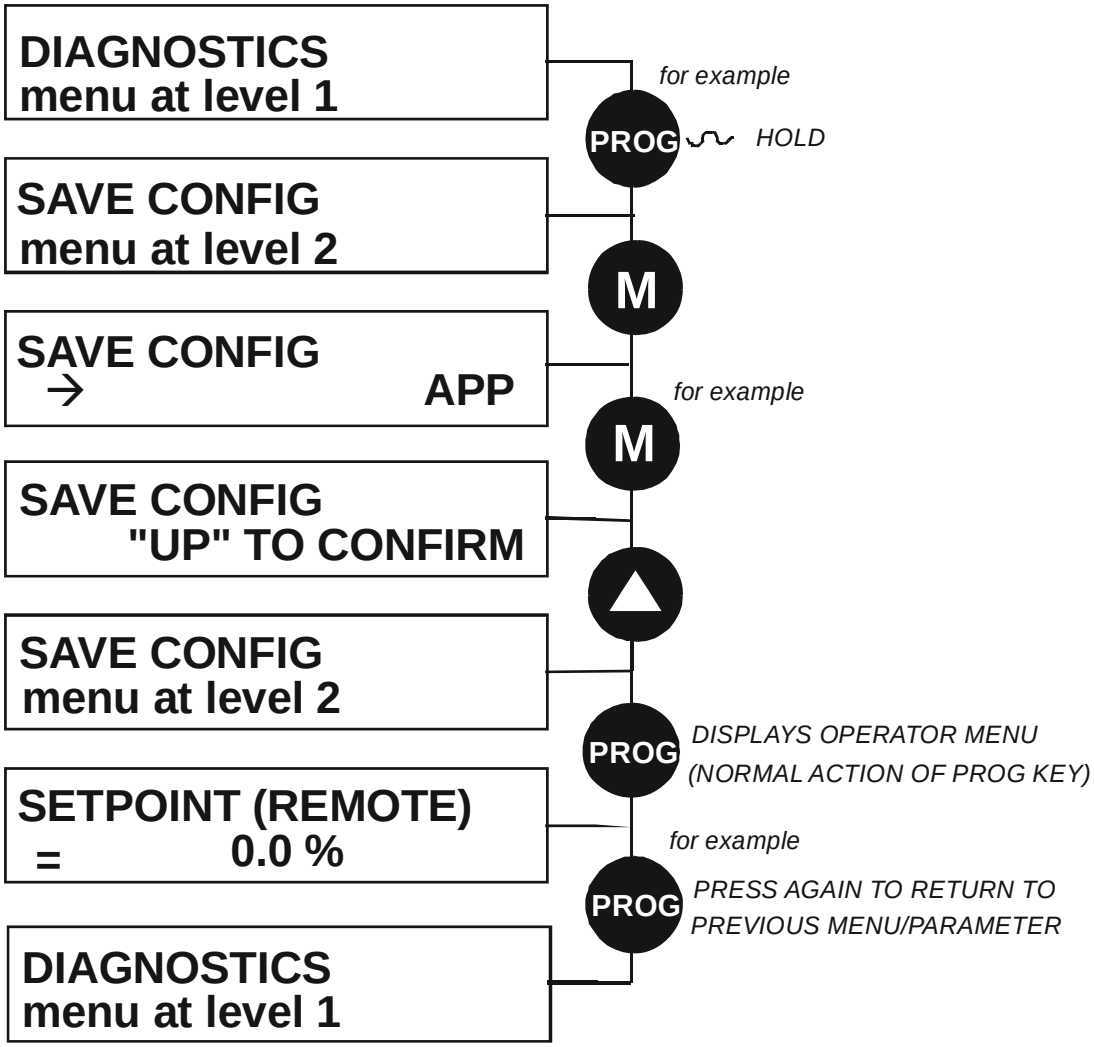

Quick Tag Information

With a parameter displayed, hold down the **M** key for approximately 3 seconds to display the parameter's tag number (a message may be displayed during this time).

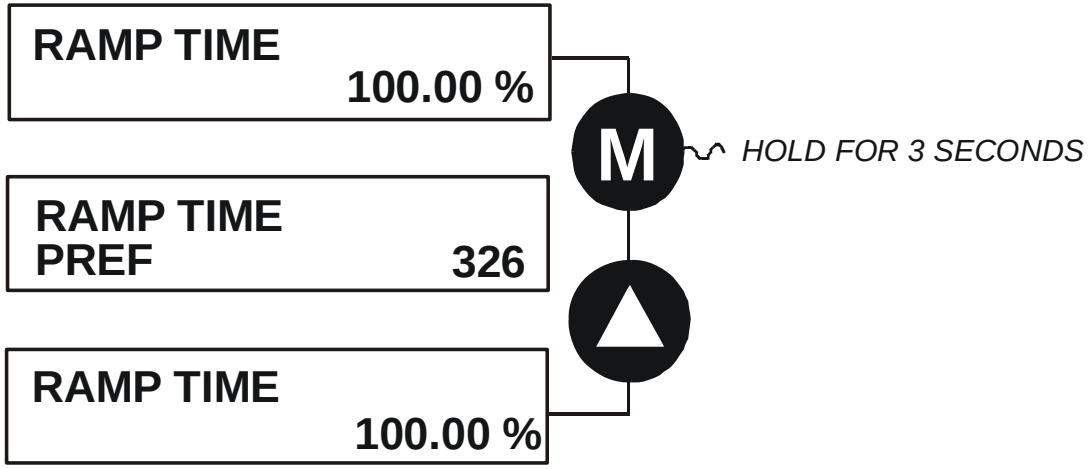

Password Protection (6901 keypad)

When activated, the password prevents unauthorised parameter modification by making all parameters “read-only”. If you attempt to modify a password protected parameter, you will be prompted for the password.

The password protection is activated/deactivated using the PASSWORD parameter.

MMI Menu Map

1 SETUP

2 MENUS

3 ACCESS CONTROL

PASSWORD

To Activate Password Protection

By default the password feature is deactivated, i.e. 0000.

1. Enter a new password in the PASSWORD parameter (anything other than the default value of 0000), for example 0002.
2. Press the **E** key repeatedly until the Welcome screen is displayed. Pressing the **E** key again activates password protection.

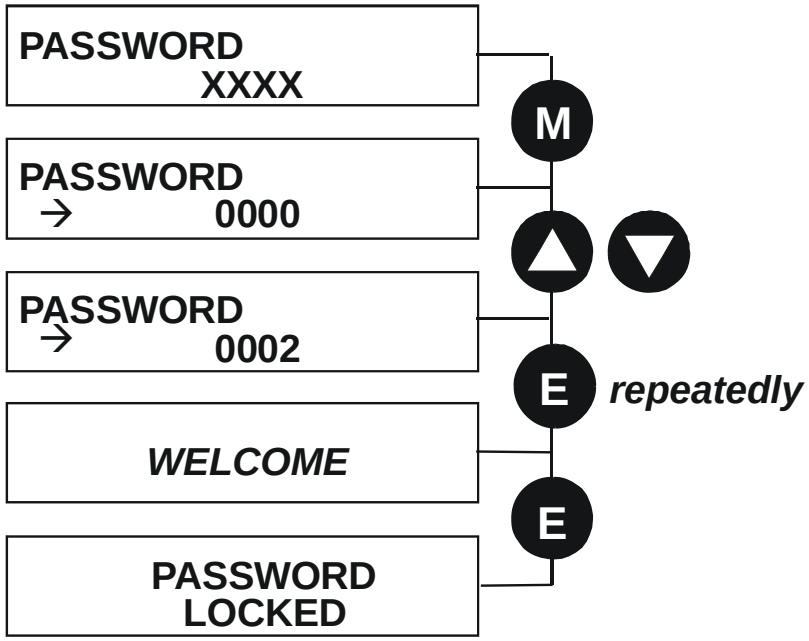

Note ***Perform a SAVE CONFIG if you need the password to be saved on power-down.***

To De-activate Password Protection

If you try to change the value of a parameter with password protection activated, the PASSWORD screen is displayed for you to enter the current password. If you enter the password correctly password protection is temporarily de-activated.

To Re-activate Password Protection

Re-activate an existing password by pressing the **E** key repeatedly until the PASSWORD LOCKED screen is displayed.

To Remove Password Protection (default status)

Navigate to the PASSWORD parameter and enter the current password. Press the **E** key. Reset the password to 0000. Password protection is now removed.

You can check that password protection has been removed by repeatedly pressing the **E** key until the Welcome screen is displayed. Pressing the **E** key again will NOT display the PASSWORD LOCKED screen.

Note ***Perform a SAVE CONFIG if you need "no password" to be saved on power-down.***

Power-up Key Combinations

Resetting to Factory Defaults (2-button reset)

A special key combination restores to the drive the current product code default parameter values. This feature is only available at power-up as a security measure.

6901 Keypad Combination

Hold down the keys opposite:

Power-up the drive, continue to hold for at least 2 seconds

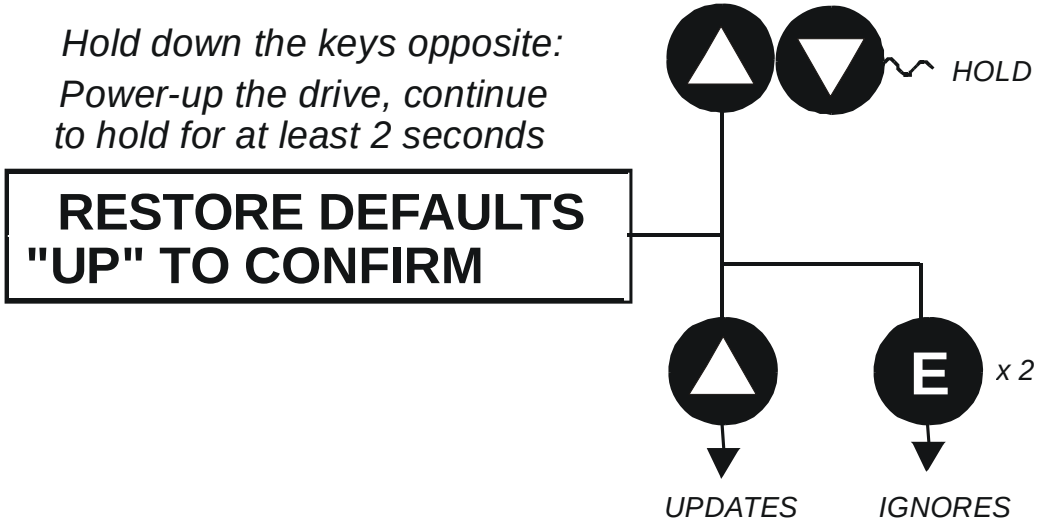

On pressing "UP", the factory defaults will be restored. The keypad will display the RESTORE DEFAULTS menu. Press "E" to exit this menu.

If you decide not to update to factory defaults, press the "E" key twice to return to the menus at level 1.

Changing the Product Code (3-button reset)

On rare occasions it may be necessary to change the default settings by changing the Product Code. The Product Code is detailed in Appendix E.

A special key combination is required to change the product code. This feature is only available at power-up as a security measure.

The 3-button reset will take you to the POWER BOARD menu in the expanded SYSTEM menu (highlighted in the diagrams below).

6901 Keypad Combination

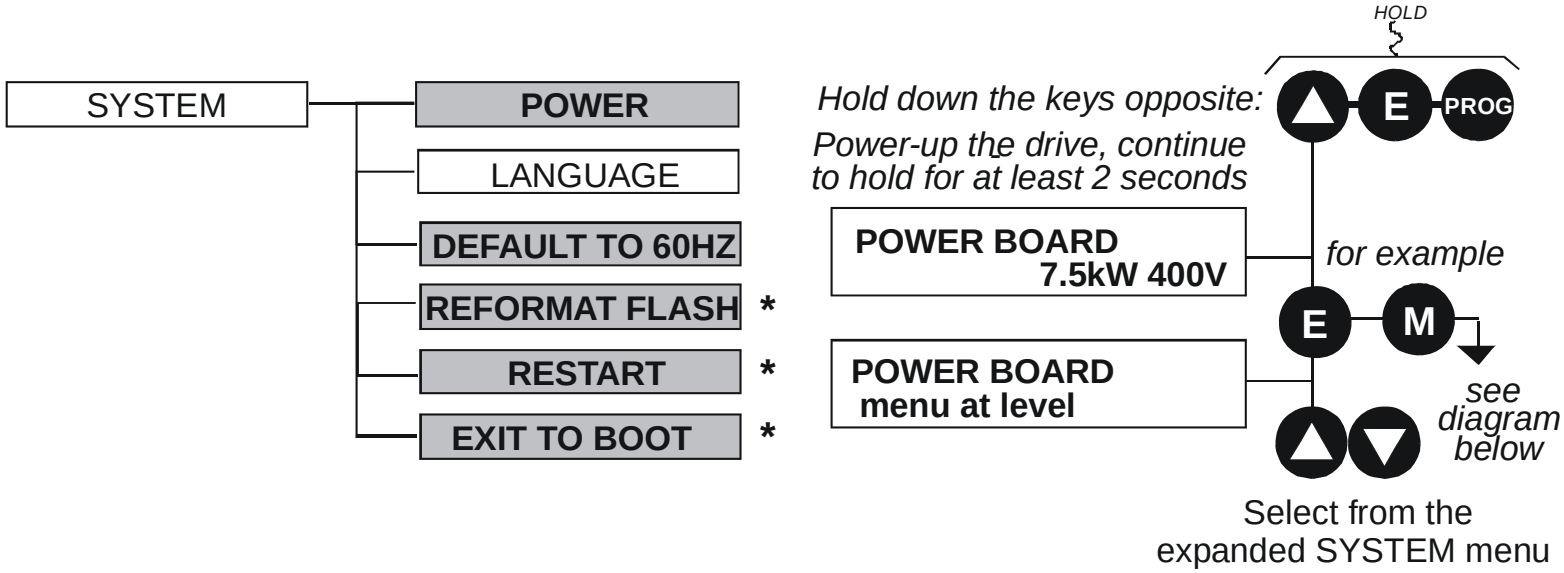

IMPORTANT **We recommend the menus marked * above are only used by Parker SSD Drives or suitably qualified personnel.**

Note ***The LANGUAGE menu currently contains selection for ENGLISH only.***

POWER BOARD (6901 keypad)

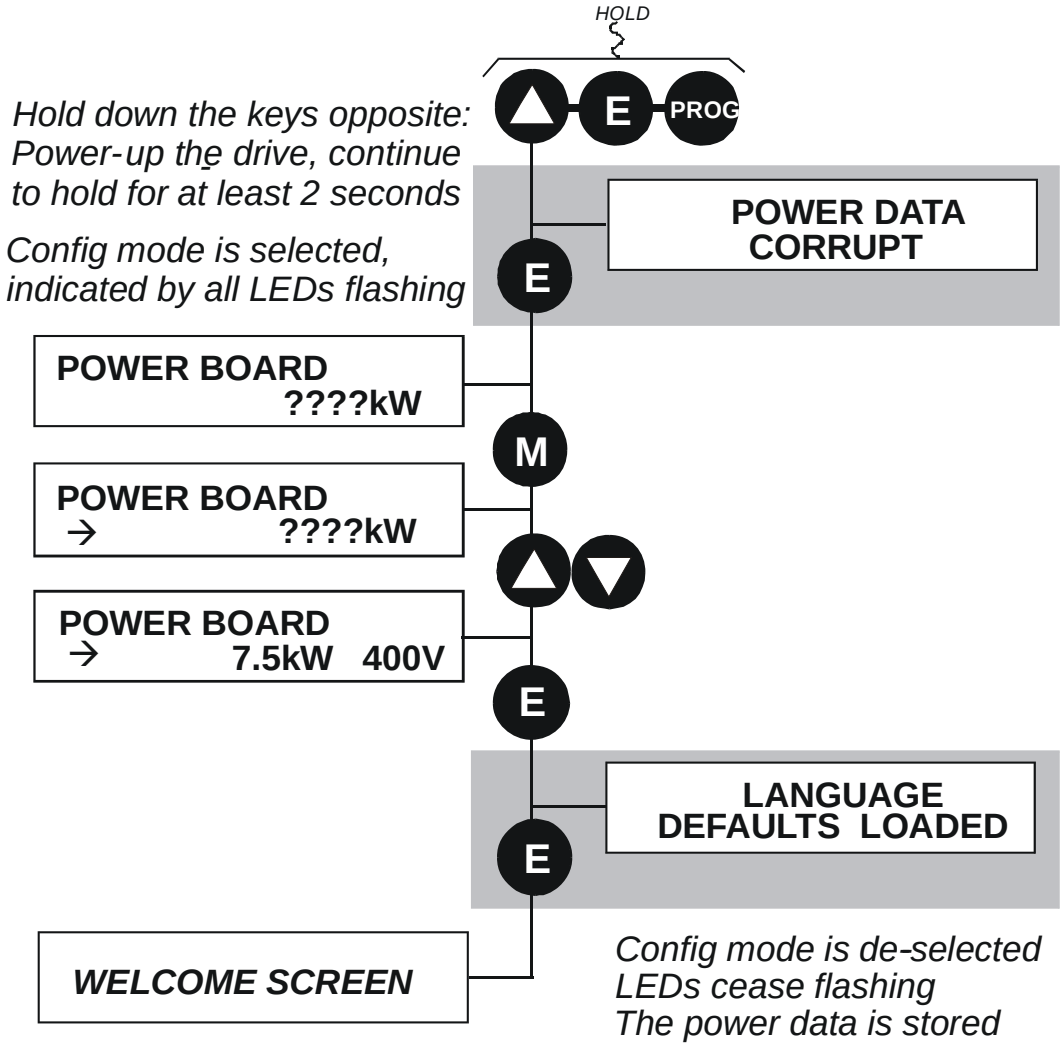

The diagram above shows a 3-button reset when there is no power data stored in the drive. If the drive has power data stored, then the “Power Data Corrupt” and “Language Defaults Loaded” alert messages will not be displayed, also the display will show the current power board selection, instead of “????kW ???V”.

DEFAULT TO 60HZ

The setting of this parameter selects the drive operating frequency. It affects those parameters whose values are dependent upon the default base frequency of the drive. Settings will only be updated following a “restore macro” operation.

The default is 50Hz (6511 keypad = 0 , 6901 keypad = FALSE).

Refer to Appendix D: “Programming” - Frequency Dependent Defaults.

RESTORE DEFAULTS

Refer to “Resetting to Factory Defaults (2-button reset)”, page 7-23.

Remote Mounting the Keypad

Fitting the Remote 6901 Keypad

The 6052 Mounting Kit is required to remote-mount a 6901 Keypad. An enclosure rating of IP54 is achieved for the remote Keypad when correctly mounted using the 6052 Mounting Kit.

6052 Mounting Kit Parts for the Remote Keypad

Tools Required

No. 2 Posidrive screwdriver.

6052 Mounting Kit			
1	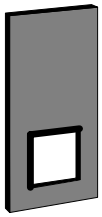	1	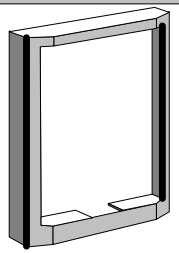
4	No. 6 x 12mm	1	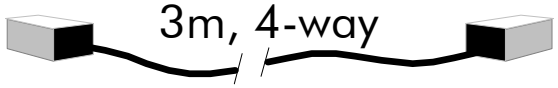

Assembly Procedure

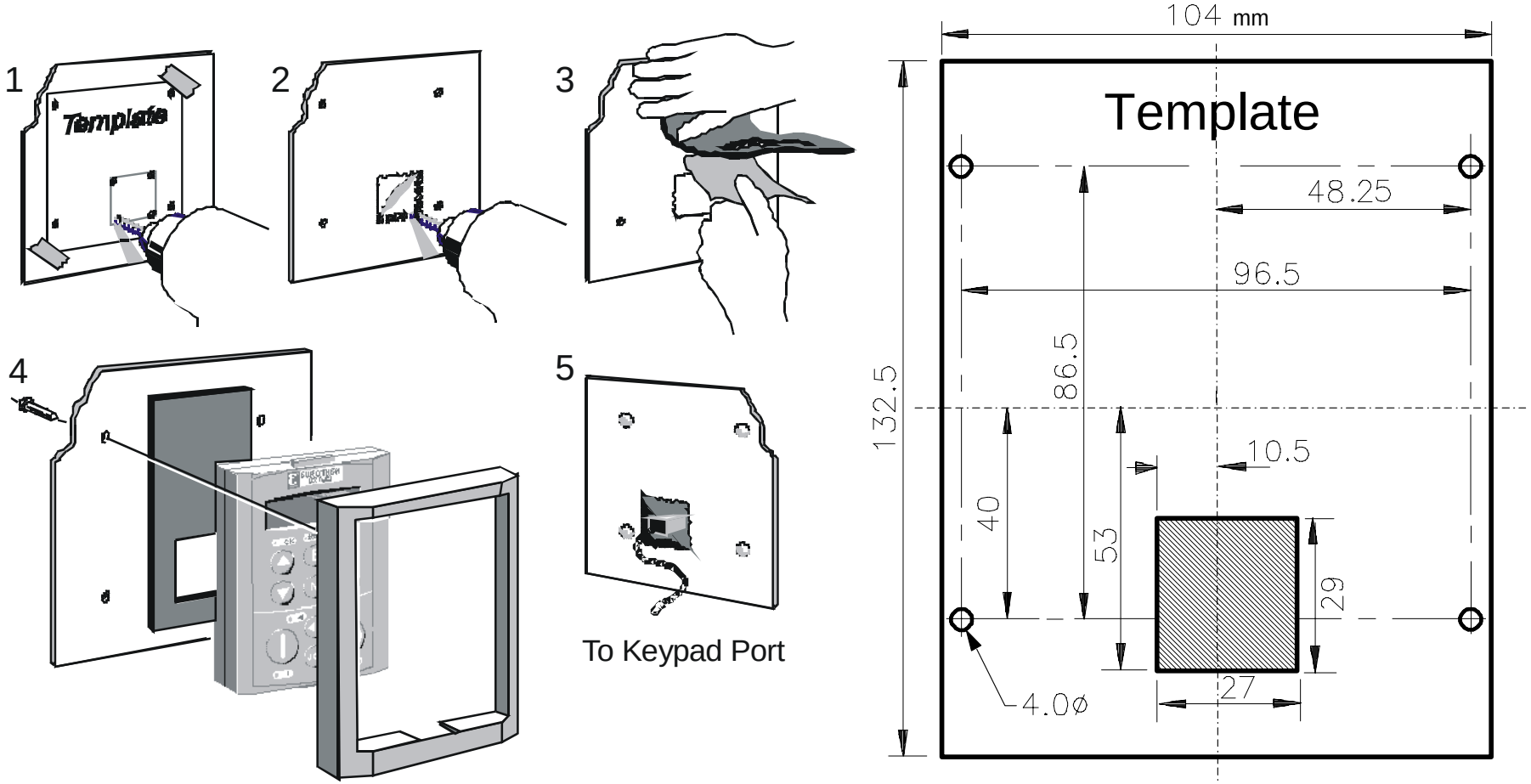

Figure 7.1 Mounting Dimensions for the Remote-Mounted 6901 Keypad

Chapter 8

Keypad Menus

This chapter details the Keypad menus available on the 6511 and 6901 Keypads when used on the 890CS Common Bus Supply, and the 6901 Keypad when used on the 890CD Common Bus Drive & 890SD Standalone Drive.

The 6511 keypad displays a numbered menu, whilst the 6901 keypad displays information using concise text and allows access to more parameters.

- Menus for the 890CS Common Bus Supply
  - DIAGNOSTIC menu
- Menus for the 890 Common Bus/Standalone Drive
  - OPERATOR menu
  - DIAGNOSTIC menu
  - QUICK SETUP menu
  - SETUP menu
  - SYSTEM menu

890CS Common Bus Supply

The table below shows the parameters available using the 6511 Keypad. The full names as displayed by the 6901 Keypad and the DSE Configuration Tool are also provided. The list is shown in MMI order.

The DIAGNOSTIC Menu

DIAGNOSTIC MENU 890CS Common Bus Supply		
6511 Display	6901 Display	
0.0 %	OUTPUT POWER	As a percentage of nominal full power for the selected input voltage
0 C	HEATSINK TEMP	The heatsink temperature in Centrigrade
0.0 Hz	SUPPLY FREQUENCY	The real-time output frequency in Hertz
0 V	DC LINK VOLTS	Vac (rms) x √2 = dc link Volts (when motor stopped)
0.0 A	INPUT CURRENT	The input current in Amps

890 Common Bus/890 Standalone Drive

The table below shows the parameter's full name, as displayed by the 6901 Keypad and the DSE Configuration Tool. The list is shown in MMI order.

Note ***Additional parameters are available using the 6901 Keypad and the DSE Configuration Tool. Refer to Appendix D for a full listing of all parameters.***

Keypad Menus

6901 Keypad/DSE

```
|__OPERATOR
|        |__SETPOINT
|        |__SPEED DEMAND
|        |__DRIVE FREQUENCY
|        |__MOTOR CURRENT A
|        |__TORQUE FEEDBACK
|        |__DC LINK VOLTS
|__DIAGNOSTICS
|        |__SPEED DEMAND
|        |__REMOTE SETPOINT
|        |__COMMS SETPOINT
|        |__LOCAL SETPOINT
|        |__JOG SETPOINT
|        |__TOTL SPD DMD RPM
|        |__TOTAL SPD DMD %
|        |__SPEED FBK RPM
|        |__SPEED FBK %
|        |__SPEED ERROR
|        |__DRIVE FREQUENCY
|        |__DIRECT INPUT
|        |__TORQ DMD ISOLATE
```

Keypad Menus

6901 Keypad/DSE

```
|        |__ACTUAL POS LIM
|        |__ACTUAL NEG LIM
|        |__AUX TORQUE DMD
|        |__TORQUE DEMAND
|        |__TORQUE FEEDBACK
|        |__FIELD FEEDBACK
|        |__MOTOR CURRENT %
|        |__MOTOR CURRENT A
|        |__DC LINK VOLTS
|        |__TERMINAL VOLTS
|        |__BRAKING
|        |__DRIVE FREQUENCY
|        |__ACTIVE WORD 1
|        |__ACTIVE WORD 2
|        |__FIRST TRIP
|        |__TRIP 1 (NEWEST)
|        |__TRIP 2
|        |__TRIP 3
|        |__TRIP 4
|        |__TRIP 5
|        |__TRIP 6
|        |__TRIP 7
|        |__TRIP 8
|        |__TRIP 9
|        |__TRIP 10 (OLDEST)
|        |__ANALOG INPUT 1
|        |__ANALOG INPUT 2
|        |__ANALOG INPUT 3
```

Keypad Menus

6901 Keypad/DSE

```
|        |__ANALOG INPUT 4
|        |__ANALOG INPUT 5
|        |__DIGITAL INPUT 1
|        |__DIGITAL INPUT 2
|        |__DIGITAL INPUT 3
|        |__DIGITAL INPUT 4
|        |__DIGITAL INPUT 5
|        |__DIGITAL INPUT 6
|        |__DIGITAL INPUT 7
|        |__DIGITAL INPUT 8
|        |__DIGITAL INPUT 9
|        |__ANALOG OUTPUT 1
|        |__ANALOG OUTPUT 2
|        |__DIGITAL OUTPUT 1
|        |__DIGITAL OUTPUT 2
|        |__DIGITAL OUTPUT 3
|__QUICK SETUP
|        |__CONTROL MODE
|        |__MAX SPEED
|        |__RAMP ACCEL TIME
|        |__RAMP DECEL TIME
|        |__RUN STOP MODE
|        |__JOG SETPOINT
|        |__V/F SHAPE
|        |__QUADRATIC TORQUE
|        |__MOTOR CURRENT
|        |__FIXED BOOST
|        |__CURRENT LIMIT
```

Keypad Menus

6901 Keypad/DSE

```
|        |__VOLTAGE MODE
|        |__POWER
|        |__MOTOR BASE FREQ
|        |__MOTOR VOLTAGE
|        |__NAMEPLATE RPM
|        |__MOTOR POLES
|        |__MOTOR CONNECTION
|        |__PULSE ENC VOLTS
|        |__ENCODER LINES
|        |__ENCODER INVERT
|        |__AUTOTUNE ENABLE
|        |__AUTOTUNE MODE
|        |__MAG CURRENT
|        |__STATOR RES
|        |__LEAKAGE INDUC
|        |__MUTUAL INDUC
|        |__ROTOR TIME CONST
|        |__SPEED PROP GAIN
|        |__SPEED INT TIME
|        |__AIN 1 TYPE
|        |__AIN 2 TYPE
|        |__AIN 3 TYPE
|        |__AIN 4 TYPE
|        |__DISABLED WORD 1
|        |__DISABLED WORD 2
|        |__VIEW LEVEL
|__SYSTEM
|        |__SAVE CONFIG
```

The OPERATOR Menu

OPERATOR MENU 890CD Common Bus Drive & 890SD Standalone Drive	
6901 Display	
SETPOINT (xxxxxx)	***Range:*** *—.xx %*
(Fixed as PREF 101.10) Indicates target speed. This will be equal to either: LOCAL SETPOINT, REMOTE SETPOINT, JOG SETPOINT, COMMS SETPOINT or FIREWIRE SETPOINT.	*(Refer to the REFERENCE or REFERENCE JOG function blocks)*
SPEED DEMAND	***Range:*** *—.xx %*
(Default: PREF 101.16) Indicates actual speed demand. This is the input to the Drive.	*(Refer to the REFERENCE function block)*
DRIVE FREQUENCY	***Range:*** *—.xx Hz*
(Default: PREF 73.04) The Drive output frequency.	*(Refer to the REFERENCE function block)*
MOTOR CURRENT A	***Range:*** *—.xx A*
(Default: PREF 70.13) This diagnostic contains the level of rms line current being drawn from the Drive.	*(Refer to the REFERENCE function block)*
TORQUE FEEDBACK	***Range:*** *—.xx %*
(Default: PREF 70.10) Shows the estimated motor torque, as a percentage of rated motor torque.	*(Refer to the REFERENCE function block)*
DC LINK VOLTS	***Range:*** *—. V*
(Default: PREF 70.02) This shows the voltage on the dc link capacitors.	*(Refer to the REFERENCE function block)*

The DIAGNOSTIC Menu

DIAGNOSTIC MENU 890CD Common Bus Drive & 890SD Standalone Drive		
PREF	6901 Display	
101.09	SPEED DEMAND	***Range:*** *—.xx %*
Indicates actual speed demand. This is the input to the frequency controller. *(Refer to the REFERENCE function block)*		
101.01	REMOTE SETPOINT	***Range:*** *—.xx %*
This is the target reference that the drive will ramp to in remote reference mode (not including trim), direction is taken from REFERENCE::REMOTE REVERSE and the sign of REMOTE SETPOINT. *(Refer to the REFERENCE function block)*		
101.14	COMMS SETPOINT	***Range:*** *—.xx %*
This setpoint is the target reference that the drive will ramp to in Remote Reference Comms mode (not including trim). The direction is always positive, i.e. forward. *(Refer to the REFERENCE function block)*		
101.12	LOCAL SETPOINT	***Range:*** *—.xx %*
Indicates the Keypad setpoint. It is always a positive quantity; saved on power down. Direction is taken from LOCAL REVERSE. *(Refer to the REFERENCE function block)*		
103.01	(JOG) SETPOINT	***Range:*** *—.xx %*
The setpoint is the target reference that the drive will ramp to in Jog Reference mode. *(Refer to the REFERENCE JOG function block)*		

DIAGNOSTIC MENU
890CD Common Bus Drive & 890SD Standalone Drive

PREF	6901 Display	
78.17	TOTL SPD DMD RPM	***Range:*** *—.xx rpm*
The final value of speed demand obtained after summing all sources in rpm. *(Refer to the SPEED LOOP function block)*		
78.18	TOTAL SPD DMD %	***Range:*** *—.xx %*
The final value of speed demand obtained after summing all sources as a percentage of MAX SPEED CLAMP (REFERENCE function block). *(Refer to the SPEED LOOP function block)*		
70.04	SPEED FBK RPM	***Range:*** *—.xx rpm*
The mechanical speed of the motor shaft in revolutions per minute. *(Refer to the FEEDBACKS function block)*		
70.06	SPEED FBK %	***Range:*** *—.xx %*
Shows the mechanical speed of the motor shaft as a percentage of MAX SPEED CLAMP (REFERENCE function block). *(Refer to the FEEDBACKS function block)*		
78.19	SPEED ERROR	***Range:*** *—.xx %*
The difference between the demanded speed and the actual speed. *(Refer to the SPEED LOOP function block)*		
73.04	DRIVE FREQUENCY	***Range:*** *—.xx Hz*
Shows the drive output frequency in Hz. *(Refer to the PATTERN GEN function block)*		

DIAGNOSTIC MENU 890CD Common Bus Drive & 890SD Standalone Drive		
PREF	6901 Display	
78.21	DIRECT INPUT	***Range:*** *—.xx %*
The value of the direct input, after scaling and clamping.		
		(Refer to the SPEED LOOP function block)
78.16	TORQ DMD ISOLATE	***Range****: FALSE / TRUE*
Speed Control mode and Torque Control mode selection. Torque Control mode = TRUE.		
		(Refer to the SPEED LOOP function block)
83.05	ACTUAL POS LIM	***Range:*** *—.xx %*
The final actual positive torque limit as a percentage of rated motor torque.		
		(Refer to the TORQUE LIMIT function block)
83.06	ACTUAL NEG LIM	***Range:*** *—.xx %*
The final actual negative torque limit as a percentage of rated motor torque.		
		(Refer to the TORQUE LIMIT function block)
78.07	AUX TORQUE DMD	***Range:*** *—.xx %*
The auxiliary motor torque as a percentage of rated motor torque as a percentage of rated motor torque.		
		(Refer to the SPEED LOOP function block)
78.20	TORQUE DEMAND	***Range:*** *—.xx %*
The demanded motor torque as a percentage of rated motor torque.		
		(Refer to the SPEED LOOP function block)

DIAGNOSTIC MENU 890CD Common Bus Drive & 890SD Standalone Drive		
PREF	6901 Display	
70.10	TORQUE FEEDBACK	***Range:*** *—.xx %*
The estimated motor torque, as a percentage of rated motor torque. *(Refer to the FEEDBACKS function block)*		
70.11	FIELD FEEDBACK	***Range:*** *—.xx %*
A value of 100% indicates the motor is operating at rated magnetic flux (field). *(Refer to the FEEDBACKS function block)*		
70.12	MOTOR CURRENT %	***Range:*** *—.xx %*
This diagnostic contains the level of rms line current being drawn from the drive and is seen as a % of the MOTOR CURRENT parameter setting in the MOTOR INDUCTION function block. *(Refer to the FEEDBACKS function block)*		
70.13	MOTOR CURRENT A	***Range:*** *—.x A*
This diagnostic contains the level of rms line current being drawn from the drive. *(Refer to the FEEDBACKS function block)*		
70.02	DC LINK VOLTS	***Range:*** *—. V*
The internal dc voltage tested across the DC link capacitors. *(Refer to the FEEDBACKS function block)*		
70.03	TERMINAL VOLTS	***Range:*** *—. V*
This shows the rms voltage, between phases, applied by the drive to the motor terminals. *(Refer to the FEEDBACKS function block)*		

DIAGNOSTIC MENU 890CD Common Bus Drive & 890SD Standalone Drive		
PREF	6901 Display	
99.06	BRAKING	***Range:*** *FALSE / TRUE*
A read-only parameter indicating the state of the dynamic brake switch. *(Refer to the DYNAMIC BRAKING function block)*		
73.04	DRIVE FREQUENCY	***Range:*** *—.x Hz*
The drive output frequency in Hertz. *(Refer to the PATTERN GEN function block)*		
97.05	ACTIVE WORD 1	***Range:*** *0000 to FFFF*
Indicates which trips are currently active. These parameters are a coded representation of the trip status. *(Refer to the TRIPS STATUS function block)*		
97.06	ACTIVE WORD 2	***Range:*** *0000 to FFFF*
Indicates which trips are currently active. These parameters are a coded representation of the trip status. *(Refer to the TRIPS STATUS function block)*		
97.09	FIRST TRIP	***Range:*** *Enumerated - refer to block*
From when a trip occurs until that trip is reset, this parameter indicates the trip source. When several trips have occurred, this parameter indicates the first one that was detected. *(Refer to the TRIPS STATUS function block)*		

DIAGNOSTIC MENU 890CD Common Bus Drive & 890SD Standalone Drive		
PREF	6901 Display	
96.01	TRIP 1 (NEWEST)	***Range:*** *Enumerated - refer to block*
Records the most recent trip that caused the drive to stop. *(Refer to the TRIPS STATUS function block)*		
96.02	TRIP 2	***Range:*** *Enumerated - refer to block*
Records the second most recent trip that caused the drive to stop. *(Refer to the TRIPS STATUS function block)*		
96.03	TRIP 3	***Range:*** *Enumerated - refer to block*
Records the third most recent trip that caused the drive to stop. *(Refer to the TRIPS STATUS function block)*		
96.04	TRIP 4	***Range:*** *Enumerated - refer to block*
Records the fourth most recent trip that caused the drive to stop. *(Refer to the TRIPS STATUS function block)*		
96.05	TRIP 5	***Range:*** *Enumerated - refer to block*
Records the fifth most recent trip that caused the drive to stop. *(Refer to the TRIPS STATUS function block)*		

DIAGNOSTIC MENU 890CD Common Bus Drive & 890SD Standalone Drive		
PREF	6901 Display	
96.06	TRIP 6	***Range:*** *Enumerated - refer to block*
Records the sixth most recent trip that caused the drive to stop. *(Refer to the TRIPS STATUS function block)*		
96.07	TRIP 7	***Range:*** *Enumerated - refer to block*
Records the seventh most recent trip that caused the drive to stop. *(Refer to the TRIPS STATUS function block)*		
96.08	TRIP 8	***Range:*** *Enumerated - refer to block*
Records the eighth most recent trip that caused the drive to stop. *(Refer to the TRIPS STATUS function block)*		
96.09	TRIP 9	***Range:*** *Enumerated - refer to block*
Records the ninth most recent trip that caused the drive to stop. *(Refer to the TRIPS STATUS function block)*		
96.10	TRIP 10 (OLDEST)	***Range:*** *Enumerated - refer to block*
Records the tenth most recent trip that caused the drive to stop. *(Refer to the TRIPS STATUS function block)*		

DIAGNOSTIC MENU 890CD Common Bus Drive & 890SD Standalone Drive		
PREF	6901 Display	
1.06	ANALOG INPUT 1	***Range:*** *—.xx %*
(VALUE) The input reading.		
		(Refer to the ANALOG INPUT function block)
2.06	ANALOG INPUT 2	***Range:*** *—.xx %*
(VALUE) The input reading.		
		(Refer to the ANALOG INPUT function block)
3.06	ANALOG INPUT 3	***Range:*** *—.xx %*
(VALUE) The input reading.		
		(Refer to the ANALOG INPUT function block)
4.06	ANALOG INPUT 4	***Range:*** *—.xx %*
(VALUE) The input reading.		
		(Refer to the ANALOG INPUT function block)
5.06	ANALOG INPUT 5	***Range:*** *—.xx %*
(VALUE) The input reading (ANIN1 - ANIN2).		
		(Refer to the ANALOG INPUT function block)
8.02	DIGITAL INPUT 1	***Range:*** *FALSE / TRUE*
(VALUE) The TRUE or FALSE input.		
		(Refer to the DIGITAL INPUT function block)

DIAGNOSTIC MENU 890CD Common Bus Drive & 890SD Standalone Drive		
PREF	6901 Display	
9.02	DIGITAL INPUT 2	***Range:*** *FALSE / TRUE*
(VALUE) The TRUE or FALSE input.		*(Refer to the DIGITAL INPUT function block)*
10.02	DIGITAL INPUT 3	***Range:*** *FALSE / TRUE*
(VALUE) The TRUE or FALSE input.		*(Refer to the DIGITAL INPUT function block)*
11.02	DIGITAL INPUT 4	***Range:*** *FALSE / TRUE*
(VALUE) The TRUE or FALSE input.		*(Refer to the DIGITAL INPUT function block)*
12.02	DIGITAL INPUT 5	***Range:*** *FALSE / TRUE*
(VALUE) The TRUE or FALSE input.		*(Refer to the DIGITAL INPUT function block)*
13.02	DIGITAL INPUT 6	***Range:*** *FALSE / TRUE*
(VALUE) The TRUE or FALSE input.		*(Refer to the DIGITAL INPUT function block)*
14.02	DIGITAL INPUT 7	***Range:*** *FALSE / TRUE*
(VALUE) The TRUE or FALSE input.		*(Refer to the DIGITAL INPUT function block)*

DIAGNOSTIC MENU 890CD Common Bus Drive & 890SD Standalone Drive		
PREF	6901 Display	
15.02	DIGITAL INPUT 8	***Range:*** *FALSE / TRUE*
(VALUE) The TRUE or FALSE input.		
		(Refer to the DIGITAL INPUT function block)
16.02	DIGITAL INPUT 9	***Range:*** *FALSE / TRUE*
(VALUE) The TRUE or FALSE input.		
		(Refer to the DIGITAL INPUT function block)
6.01	ANALOG OUTPUT 1	***Range:*** *—.xx %*
(VALUE) The demanded value to output.		
		(Refer to the ANALOG OUTPUT function block)
7.01	ANALOG OUTPUT 2	***Range:*** *—.xx %*
(VALUE) The demanded value to output.		
		(Refer to the ANALOG OUTPUT function block)
17.01	DIGITAL OUTPUT 1	***Range:*** *FALSE / TRUE*
(VALUE) The TRUE or FALSE output demand.		
		(Refer to the DIGITAL OUTPUT function block)
18.01	DIGITAL OUTPUT 2	***Range:*** *FALSE / TRUE*
(VALUE) The TRUE or FALSE output demand.		
		(Refer to the DIGITAL OUTPUT function block)

DIAGNOSTIC MENU 890CD Common Bus Drive & 890SD Standalone Drive		
PREF	6901 Display	
19.01	DIGITAL OUTPUT 3	***Range:*** *FALSE / TRUE*
(VALUE) The TRUE or FALSE output demand.		
		(Refer to the DIGITAL OUTPUT function block)

The QUICK SETUP Menu

Note ***For more information about these and additional parameters accessible using the DSE Configuration Tool. Refer to Appendix D or the DSE Configuration Tool on the CD supplied with your drive.***

The 890 menu system has been designed for use with the DSE Configuration Tool. Hence, the tool is the preferred method of programming, however it is possible to edit some parameters using the keypad.

The parameters most likely to require attention are contained in the QUICK SETUP menu at level 1.

Saving Your Modifications

When parameter values are modified the new settings must be saved. The drive will not retain new settings during power-down unless they have been saved. Refer to "Saving Your Application" if using the keypad.

Note ***The "Range" for a parameter value is given in the Configurable Parameters Table. Ranges for outputs are given as "—.xx %", for example, indicating an indeterminate integer for the value, to two decimal places.***

The Default values in the pages below are correct for when the UK country code is selected and a 400V 30kW Frame E power board is fitted. Some parameters in the table are marked:

* Value dependent upon the Language field of the Product Code, e.g. UK

The values for these parameters may be different for your drive/application. Refer to Appendix D: "Programming" - Product Related Default Values.

QUICK SETUP MENU 890CD Common Bus Drive & 890SD Standalone Drive				
PREF	6901 Display	Description	Range	Default
136.02	CONTROL MODE	This parameter contains the main method of motor control used by the drive	0 : VOLTS / Hz 1 : SENSORLESS VEC 2 : CLOSED-LOOP VEC 3 : 4-Q REGEN 4 : PMAC	0
101.08	* MAX SPEED	The speed at which the 890 will run when maximum setpoint is applied. The default is Product Code dependent	0 to 32000 RPM	1500 RPM
100.02	RAMP ACCEL TIME	The time taken for the 890 output frequency to ramp up from zero to MAX SPEED	0.0 to 3000.0s	10.0s
100.03	RAMP DECEL TIME	The time taken for the 890 output frequency to ramp down from MAX SPEED to zero	0.0 to 3000.0s	10.0s

QUICK SETUP MENU
890CD Common Bus Drive & 890SD Standalone Drive

PREF	6901 Display	Description	Range	Default
102.01	RUN STOP MODE	RUN RAMP : The motor speed is reduced to zero at a rate set by RAMP DECEL TIME (^{S}4). A 2 second DC pulse is applied at end of ramp COAST : The motor is allowed to freewheel to a standstill DC INJECTION : On a stop command, the motor volts are rapidly reduced at constant frequency to deflux the motor. A low frequency braking current is then applied until the motor speed is almost zero. This is followed by a timed DC pulse to hold the motor shaft. STOP RAMP : The motor will decelerate at a rate set by STOP TIME (REFERENCE STOP function block).	0 : RUN RAMP 1 : COAST 2 : DC INJECTION 3 : STOP RAMP	0
103.01	JOG SETPOINT	Speed the 890 will run at if the Jog input is high, as a percentage of the MAX SPEED parameter	-100.00 to 100.00%	10.00%

QUICK SETUP MENU
890CD Common Bus Drive & 890SD Standalone Drive

PREF	6901 Display	Description	Range	Default
21.01	V/F SHAPE	LINEAR LAW: This gives a constant flux characteristic up to the BASE FREQUENCY FAN LAW: This gives a quadratic flux characteristic up to the BASE FREQUENCY. This matches the load requirement for fan and most pump applications USER DEFINED: This gives a user defined flux characteristic up to the BASE FREQUENCY	0 : LINEAR LAW 1 : FAN LAW 2 : USER DEFINED	0

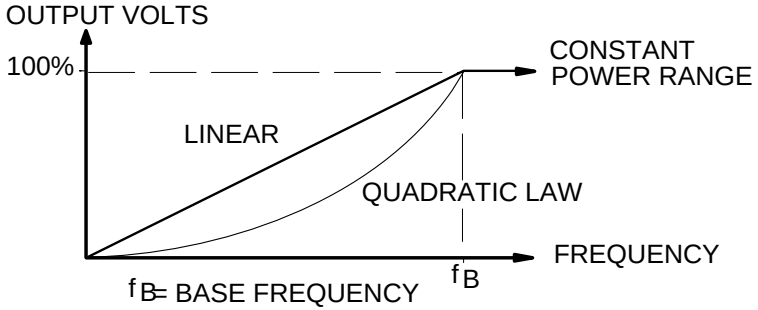

QUICK SETUP MENU
890CD Common Bus Drive & 890SD Standalone Drive

PREF	6901 Display	Description	Range	Default
70.01	QUADRATIC TORQUE	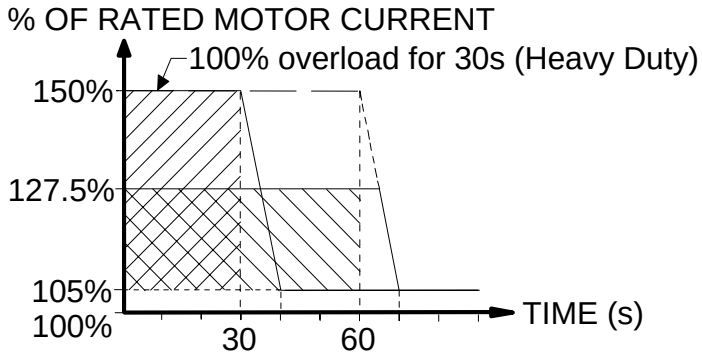 FALSE - CONSTANT: Inverse time allows 150% overload for 60s, then ramps back the current limit to 105% over a 10s period. At a lower load, the overload area remains the same, e.g. at 127.5% load for 120s - after 120s has expired, the output of the inverse time function is ramped back over a 10s period from 150% as before. TRUE - QUADRATIC: current limit is set to 110% motor current, inverse time delay is set to 30s	0=FALSE 1=TRUE Note that 890 Frames B, C & D have no quadratic torque current rating.	0
70.13	MOTOR CURRENT	This parameter contains the motor nameplate full-load line current	0.01 to 999.99A	product code dependent

QUICK SETUP MENU
890CD Common Bus Drive & 890SD Standalone Drive

PREF	6901 Display	Description	Range	Default
21.03	FIXED BOOST	Used to correctly flux the motor at low speeds. This allows the drive to produce greater starting torque for high friction loads. It increases the motor volts above the selected V/F characteristic at the lower end of the speed range 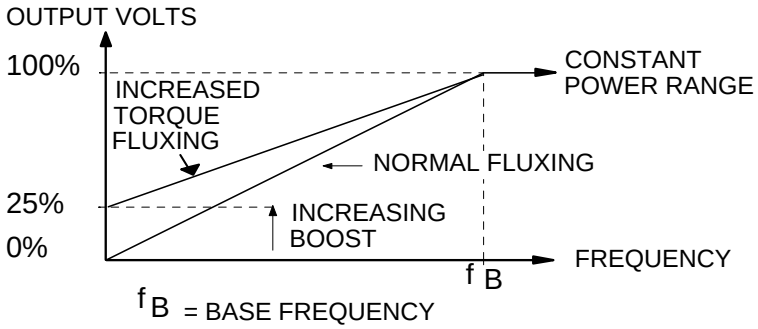	0.00 to 25.00%	product code dependent
82.01	CURRENT LIMIT	This parameter sets the level of motor current, as a % of MOTOR CURRENT (S9) at which the drive begins to take current limit action.	0.00 to 300.00%	150.00%
81.01	VOLTAGE MODE	Defines how volts Hz characteristic varies in response to changes in DC link voltage.	0 : NONE 1 : FIXED 2 : AUTOMATIC	None

QUICK SETUP MENU
890CD Common Bus Drive & 890SD Standalone Drive

PREF	6901 Display	Description	Range	Default
27.02	POWER	Nameplate motor power.	0.0kW to 3000.0kW	product code dependent
27.03 (induction motor only)	MOTOR BASE FREQ	The output frequency at which maximum voltage is reached.	7.5 to 1000.0 Hz	50.0 Hz
27.04 (induction motor only)	* MOTOR VOLTAGE	This parameter contains the motor nameplate voltage at base frequency	0.0 to 575.0V	product code dependent
27.07 (induction motor only)	* NAMEPLATE RPM	This parameter contains the motor nameplate full-load rated speed. This is the motor speed in rpm at base frequency minus full load slip	0.0 to 30000.0 RPM	product code dependent
27.09 (induction motor only)	MOTOR POLES	This parameter contains the number of motor poles, as supplied on the motor nameplate	0=2 pole 1=4 pole 2=6 pole 3=8 pole 4=10 pole 5=12 pole	1

QUICK SETUP MENU 890CD Common Bus Drive & 890SD Standalone Drive				
PREF	6901 Display	Description	Range	Default
27.08 (induction motor only)	*MOTOR CONNECTION	This parameter contains the motor nameplate connection.	0= DELTA 1= STAR	1
71.01	PULSE ENC VOLTS	The voltage output from the encoder feedback card.	10 to 20V	5.0
71.02	ENCODER LINES	The number of lines must be set to match the type of encoder being used. Incorrect setting of this parameter will result in an erroneous speed measurement.	250 to 32767	2048
71.03	ENCODER INVERT	When TRUE, changes the sign of the measured speed and the direction of the position count.	0=FALSE 1=TRUE	0
80.01	AUTOTUNE ENABLE	Determines whether the Autotune sequence is operational or not. The Autotune sequence is operational when set to TRUE and the drive is run	0=FALSE 1=TRUE	0
80.02	AUTOTUNE MODE	Selects the Autotune operating mode.	0 : STATIONARY 1 : ROTATING 2 : SPD LOOP ROTATING 3 : SPD LOOP STATIONARY	

QUICK SETUP MENU
890CD Common Bus Drive & 890SD Standalone Drive

PREF	6901 Display	Description	Range	Default
27.06 (induction motor only)	MAG CURRENT	This parameter contains the motor model no-load line current as determined by the Autotune, or taken from the motor nameplate	0.00 to 3276.70 A	product code dependent
27.14 (induction motor only)	STATOR RES	This parameter contains the motor model per-phase stator resistance as determined by Autotune.	0.0000 to 250.0000Ω	product code dependent
27.15 (induction motor only)	LEAKAGE INDUC	This parameter contains the motor model per-phase leakage inductance as determined by Autotune.	0.00 to 300.00mH	product code dependent
27.16 (induction motor only)	MUTUAL INDUC	This parameter contains the motor model per-phase mutual inductance as determined by Autotune.	0.00 to 3000.00mH	product code dependent
27.17 (induction motor only)	ROTOR TIME CONST	This parameter contains the motor model rotor time constant as determined by Autotune.	10.00 to 3000.00ms	product code dependent
78.01	SPEED PROP GAIN	Sets the proportional gain of the loop. Speed error (mechanical rev/s) x proportional gain = torque percent.	0.0 to 3000.0	20.0

QUICK SETUP MENU 890CD Common Bus Drive & 890SD Standalone Drive				
PREF	6901 Display	Description	Range	Default
78.02	SPEED INT TIME	This is the integral time constant of the speed loop. A speed error which causes the proportional term to produce a torque demand T, will cause the integral term to also ramp up to a torque demand T after a time equal to “speed int time”.	1 to 15000ms	100
1.03	AIN 1 TYPE	Selects input range for Analog Input 1.	0 = -10..+10 V 1 = 0..+10 V	0
2.03	AIN 2 TYPE	Selects input range for Analog Input 2.	0 = -10..+10 V 1 = 0..+10 V	0
3.03	AIN 3 TYPE	Selects input range for Analog Input 3.	0 = -10..+10 V 1 = 0..+10 V 2 = 0..20 mA 3 = 4..20 mA	0
4.03	AIN 4 TYPE	Selects input range for Analog Input 4.	0 = -10..+10 V 1 = 0..+10 V 2 = 0..20 mA 3 = 4..20 mA	0
97.01	DISABLE TRIPS	Indicates which trips have been disabled. Not all trips may be disabled, the DISABLED TRIPS mask is ignored for trips that cannot be disabled. Refer to Chapter 10.	0000 to FFFF	0700

QUICK SETUP MENU
890CD Common Bus Drive & 890SD Standalone Drive

PREF	6901 Display	Description	Range	Default
97.02	DISABLE TRIPS+	Indicates which trips have been disabled. Not all trips may be disabled, the DISABLED TRIPS mask is ignored for trips that cannot be disabled. Refer to Chapter 10.	0000 to FFFF	0840
31.01	VIEW LEVEL	Selects the menu to be displayed by the keypad.	0 : OPERATOR 1 : BASIC 2 : ADVANCED	1

For more information refer to Chapter 4/5: “Keypad Menus” - The QUICK SETUP Menu.

The SETUP Menu

This menu contains all the parameters available to you when using the DSE 890 Configuration Tool.

ADVANCED view level must be selected to view this menu. using the 6901 keypad on the 890CD Common Bus Drive and 890SD Standalone Drive.

Note *We recommend that you program the 890 using the DSE Configuration Tool.*

For details of the parameters in this menu, refer to Appendix D.

The SYSTEM Menu

SAVE CONFIG

The SAVE CONFIG menu saves your current settings.

To save an application press the **M** key when displaying the SAVE CONFIG menu. Press the ▲ key to confirm, as instructed.

Saving again will overwrite the previous information.

Saved information is stored during power-down and is restored at power-up.

This does not save the link configuration. It saves information for MMI parameters.

Chapter 9

Trips and Fault Finding

The drive may trip in order to protect itself. To restart the drive, you will need to clear the trip(s). This chapter provides a list of trips, as displayed by the 6511 keypad and 6901 keypad.

- Trips
  - What happens when a trip occurs
  - Resetting a trip condition
  - Trips table
  - Hexadecimal trip representations
  - Alert Messages
- Fault finding
  - Control board STATUS LED indications

Trips

What Happens when a Trip Occurs

When a trip occurs, the drive's power stage is immediately disabled causing the motor and load to coast to a stop. The trip is latched until action is taken to reset it. This ensures that trips due to transient conditions are captured and the drive is disabled, even when the original cause of the trip is no longer present

Drive Indications

If a trip condition is detected the unit displays and performs the following actions.

1. The programming block SEQ & REF::SEQUENCING LOGIC::TRIPPED signal is set to TRUE.
2. The FIRST TRIP parameter in the TRIPS STATUS function block displays the trip ID. Refer to Chapter 8: "Keypad Menus" - DISABLED WORD 1, DISABLED WORD 2 for a table of enumerated values..

Keypad Indications (when connected)

If a trip condition is detected the MMI displays and performs the following actions.

1. The trip source is displayed on the keypad.
2. 6901 keypad only: the HEALTH LED on the Keypad flashes indicating a trip condition has occurred and a trip message is displayed stating the cause of the trip.
3. The trip message(s) must be acknowledged by pressing the **STOP** key. The trip message may be cleared by pressing the **E** key. Refer to Chapter 7: "The Keypad" - Alert Message Displays.

Resetting a Trip Condition

Before a trip can be reset, the trip condition must be removed.

Note ***A Heatsink Over-temperature trip may not reset immediately. The unit needs to cool sufficiently.***

Local Mode

To reset a trip in Local Mode:		
Remove the trip condition		Press the Stop key to clear the trip. You can now press Run to restart the system..

Remote Mode

To reset a trip in Remote Mode:		
Remove the trip condition		Press the Stop key to clear the trip. You can now press Run to restart the system..
Remove the trip condition	-	Alternatively, remove and re-apply the 24V supply at X01, or toggle the ENABLE to 0V and then 24V to restart the system.

Trips Table

The following trips may occur to protect the drive.

6511 Keypad Display	6901 Keypad Display	Description	Possible Reason for Trip
DCHI	OVERVOLTAGE	The drive internal dc link voltage is too high	♦ The supply voltage is too high ♦ Trying to decelerate a large inertia load too quickly ♦ The brake resistor is open circuit
DCLO	UNDERVOLTAGE	The drive internal dc link voltage is too low	♦ The supply voltage is too low ♦ The supply has been lost ♦ A supply phase is missing

6511 Keypad Display	6901 Keypad Display	Description	Possible Reason for Trip
OC	OVERCURRENT	The motor current being drawn from the drive is too high	♦ Trying to accelerate a large inertia load too quickly ♦ Trying to decelerate a large inertia load too quickly ♦ Application of shock load to motor ♦ Short circuit between motor phases ♦ Short circuit between motor phase and earth ♦ Motor output cables too long or too many parallel motors connected to the drive ♦ Fixed or auto boost levels are set too high
HOT	HEATSINK	The drive heatsink temperature is too high	♦ The ambient air temperature is too high ♦ Poor ventilation or spacing between drives
ET	EXTERNAL TRIP	User trip caused via control terminals	♦ +24V not present on external trip (terminal X15/05) ♦ Check setting of EXT TRIP MODE parameter
IN 1	INPUT 1 BREAK	I/O TRIPS:: INPUT 1 BREAK has gone True	♦ Check configuration to determine source of signal

6511 Keypad Display	6901 Keypad Display	Description	Possible Reason for Trip
IN 2	INPUT 2 BREAK	I/O TRIPS:: INPUT 2 BREAK has gone True	♦ Check configuration to determine source of signal
STLL	MOTOR STALLED	The motor has stalled (not rotating)	♦ Motor loading too great ♦ Current limit level is set too low ♦ Stall trip duration is set too low ♦ Fixed or auto boost levels are set too high
IT	INVERSE TIME		♦ The inverse time current limit is active: motor loading is too great; fixed or autoboost levels are too high (Full Load Current = 150% for 60 seconds)
DB R	BRAKE RESISTOR	External dynamic braking resistor has been overloaded	♦ Trying to decelerate a large inertia load too quickly or too often
DB S	BRAKE SWITCH	Internal dynamic braking switch has been overloaded	♦ Trying to decelerate a large inertia load too quickly or too often

6511 Keypad Display	6901 Keypad Display	Description	Possible Reason for Trip
DISP	OP STATION	Keypad has been disconnected from drive whilst drive is running in local control	♦ Keypad accidentally disconnected from drive
SCI	COMMS BREAK		♦ COMMS BREAK parameter set to True (refer to I/O TRIPS menu at level 3)
CNTC	CONTACTOR FBK		♦ The CONTACTOR CLOSED input in the SEQUENCING LOGIC function block remained FALSE after a run command was issued
SPD	SPEED FEEDBACK		♦ SPEED ERROR > 50.00% for 10 seconds
AOT	AMBIENT TEMP		♦ The ambient temperature in the drive is too high

6511 Keypad Display	6901 Keypad Display	Description	Possible Reason for Trip
OT	MOTOR OVERTEMP	The motor temperature is too high	♦ Excessive load ♦ Motor voltage rating incorrect ♦ FIXED BOOST and/or AUTO BOOST set too high ♦ Prolonged operation of the motor at low speed without forced cooling ♦ Check setting of INVERT THERMIST parameter in I/O TRIPS menu at level 3. ♦ Break in motor thermistor connection
I HI	CURRENT LIMIT	V/Hz mode only: If the current exceeds 180% of induction stack rated current for a period of 1 second, the drive will trip. This is caused by shock loads	♦ Remove the cause of the shock load
A24SC	24V FAILURE	The 24V customer output has fallen below 17V	♦ 24V customer output is short circuited ♦ Excessive loading

6511 Keypad Display	6901 Keypad Display	Description	Possible Reason for Trip
LSPD	LOW SPEED OVER I	The motor is drawing too much current (>100%) at zero output frequency	♦ FIXED BOOST and/or AUTO BOOST set too high (refer to FLUXING menu at level 3)
PHAS	PHASE FAIL		♦ One or more input phases not present
ENC 1	FBK ENCODER FAIL		♦ Encoder fault
SHRT	DESAT (OVER I)		♦ Instantaneous overcurrent. Refer to OVERCURRENT in this table
DCRP	VDC RIPPLE		♦ The dc link ripple voltage is too high. Check for a missing input phase.
DBSC	BRAKE SHORT CCT	Brake resistor overcurrent	♦ Check brake resistance is not less than minimum value allowed ♦ check wiring and brake resistor for earth faults
OSPD	OVERSPEED		♦ Speed feedback > 150% for 0.1 seconds
ANIN	ANALOG INPUT ERR		♦ 4-20mA analog input current > 22mA could damage the input circuit

6511 Keypad Display	6901 Keypad Display	Description	Possible Reason for Trip
DBCT	INT DB RESISTOR		♦ Braking mode set to INTERNAL (future use only). Set to EXTERNAL and connect an External Braking Resisitor if braking is required.
TRIP	UNKNOWN		♦ An unknown trip - refer to Parker SSD Drives
TR32	OTHER		♦ Refer to OTHER in Appendix D : TRIPS STATUS. One or more trips have occurred with a Value greater than 32. See the list.
ATN1	MAX SPEED LOW		♦ During Autotune the motor is required to run at the nameplate speed o f the motor. If MAX SPEED RPM limits the speed to less than this value, an error will be reported. Increase the value of MAX SPEED RPM up to the nameplate rpm of the motor (as a minimum). It may be reduced, if required, after the Autotune is complete.
ATN2	MAINS VOLTS LOW		♦ The mains input voltage is not sufficient to carry out the Autotune. Re-try when the mains has recovered.

6511 Keypad Display	6901 Keypad Display	Description	Possible Reason for Trip
ATN 3	NOT AT SPEED		♦ The motor was unable to reach the required speed to carry out the Autotune. Possible reasons include: motor shaft not free to turn; the motor data is incorrect
ATN4	MAG CURRENT FAIL		♦ It was not possible to find a suitable value of magnetising current to achieve the required operating condition for the motor. Check the motor data is correct, especially nameplate rpm and motor volts. Also check that the motor is correctly rated for the drive.
ATN5	NEGATIVE SLIP F		♦ Autotune has calculated a negative slip frequency, which is not valid. Nameplate rpm may have been set to a value higher than the base speed of the motor. Check nameplate rpm, base frequency, and pole pairs are correct.
ATN6	TR TOO LARGE		♦ The calculated value of rotor time constant is too large. Check the value of nameplate rpm.
ATN7	TR TOO SMALL		♦ The calculated value of rotor time constant is too small. Check the value of nameplate rpm.

6511 Keypad Display	6901 Keypad Display	Description	Possible Reason for Trip
ATN8	MAX RPM DATA ERR		♦ This error is reported when the MAX SPEED RPM is set to a value outside the range for which Autotune has gathered data. Autotune gathers data on the motor characteristics up to 30% beyond “max speed rpm”. If MAX SPEED RPM is later increased beyond this range, the drive had no data for this new operating area, and so will report an error. To run the motor beyond this point it is necessary to re-autotune with MAX SPEED RPM set to a higher value.
STAC	STACK TRIP		♦ The drive was unable to distinguish between an overcurrent/desat or overvoltage trip
ATNA	LEAKGE L TIMEOUT		♦ The leakage inductance measurement requires a test current to be inserted into the motor. It has not been possible to achieve the required level of current. Check that the motor is wired correctly.
PLOS	POWER LOSS STOP		♦ Power Loss Stop sequence has ramped Speed Setpoint to zero or timed out
ATNC	MOTR TURNING ERR		♦ The motor must be stationary when starting the Autotune

6511 Keypad Display	6901 Keypad Display	Description	Possible Reason for Trip
ATND	MOTR STALLED ERR		♦ The motor must be able to rotate during Autotune
ATNE	AT TORQ LIM ERR		♦ The motor is in torque limit during Autotune
ECAL	FBK ENCODR CAL	The drive has failed to set absolute position	♦ Check the encoder supports absolute position, and that the encoder is wired correctly.
GEAR	OUTPUT GBX ERROR		♦ A non-unity output gearbox is not supported if the encoder direction is reversed.
APP	APP HALTED		♦ The application has been halted by the DSE Configuration Tool
AERR	APP ERROR		♦ The application has ceased execution due to an error
FERR	FIRMWARE ERROR		♦ The firmware in the drive has stopped executing
RSLV	RESOLVER ERROR	See function block description	♦ Motor current is too high
MI2T	I2T MOTOR TRIP	See function block description	♦ Motor is undersized

6511 Keypad Display	6901 Keypad Display	Description	Possible Reason for Trip
STO	SAFE TORQUE OFF	-	♦ *Function not implemented*
REFC	REF ENCODER CAL	The drive has failed to set absolute position	♦ Check the encoder supports absolute position, and that the encoder is wired correctly.
REFF	REF ENCODER FAIL	-	♦ *Function not implemented*
DCFG	DRIVE CONFIG ERR	Drive configuration error	♦ The configuration defined in DRIVE CONFIG doesn't match the actual drive configuration.
CT1	CUST TRIP 1	See function block description	
CT2	CUST TRIP 2	See function block description	
CT3	CUST TRIP 3	See function block description	
CT4	CUST TRIP 4	See function block description	

6511 Keypad Display	6901 Keypad Display	Description	Possible Reason for Trip
CT5	CUST TRIP 5	See function block description	
CT6	CUST TRIP 6	See function block description	
CT7	CUST TRIP 7	See function block description	

Trip Groups

The DISABLE WORD, ACTIVE WORD, WARNINGS WORD and TRIGGER WORD parameters use a four digit hexadecimal number to identify individual trips. Each trip has a unique corresponding number.

- Refer to Appendix D : TRIPS STATUS for a complete trip listing for DISABLE WORD, ACTIVE WORD, WARNINGS WORD.
- Refer to Appendix D : AUTO RESTART for information about TRIGGER WORD.

Automatic Trip Reset (6901 keypad)

Using the Keypad, the drive can be configured to automatically attempt to reset a trip when an attempt is made to start driving the motor, or after a preset time once the trip condition has occurred. The following function blocks (MMI menus) are used to enable automatic trip resets.

Seq & Ref::Auto Restart (Auto-Reset)
Seq & Ref::Sequencing Logic

Setting Trip Conditions (6901 keypad)

The following function blocks (MMI menus) are used to set trip conditions:

Trips::I/O Trips
Trips::Trips Status

Viewing Trip Conditions (6901 keypad)

The following function blocks (MMI menus) can be viewed to investigate trip conditions:

Seq & Ref::Sequencing Logic
Trips::Trips History
Trips::Trips Status
Trips Status::Active Trips
Trips Status::Active Trips+
Trips Status::First Trip
Trips History::Trip 1 (NEWEST) to Trip 10 (OLDEST)

Viewing Trip Conditions (6511 keypad)

The following function blocks (MMI menus) can be viewed to investigate trip conditions:

Trips Status::Active Trips
Trips Status::Active Trips+
Trips Status::First Trip
Trips History::Trip 1 (NEWEST) to Trip 10 (OLDEST)

Alert Messages

A message will be displayed on the Keypad when either:

- A requested operation is not allowed
- The drive has tripped

The table below lists the messages and the reason for each message.

Alert Message IDs			
ID	**Message**		**Reason**
	6901 Keypad	**6511 Keypad**	
0			No Alert
1	RUNTIME ALERT XXXX YYYYYYYY	XXXX	Runtime alert
2	SAVING	SAVE	Saving to flash
3	LOADING	LOAD	Loading from flash.
4	LIMIT REACHED	HI	High or low limit reached while editing.
5	KEY INACTIVE RUN FORWARD TRUE	RUN	Can’t switch to remote mode.
6	KEY INACTIVE RUN REV TRUE	RUN	Can’t switch to remote mode.
7	KEY INACTIVE JOG TRUE	JOG	Can’t switch to remote mode.

Alert Message IDs			
ID	**Message**		**Reason**
	6901 Keypad	**6511 Keypad**	
8	KEY INACTIVE REMOTE SEQ	SEQ	Run, Jog and direction keys inactive.
9	KEY INACTIVE REMOTE REF	REF	Direction key inactive.
10	KEY INACTIVE DRIVE RUNNING	RUN	Local/Remote and Jog keys inactive.
11	KEY INACTIVE COAST STOP FALSE	STOP	Run and Jog keys over ridden.
12	KEY INACTIVE FAST STOP FALSE	STOP	Run and Jog keys over ridden.
13	KEY INACTIVE ENABLE FALSE	ENBL	Run and Jog keys over ridden.
14	CONFIG MODE FAILED	ERR1	Unable to enter configuration mode.
15	KEY INACTIVE READ ONLY	READ	Can’t edit read-only parameters
16	KEY INACTIVE PARAMETER LINKED	READ	Obsolete message

Alert Message IDs			
ID	**Message**		**Reason**
	6901 Keypad	**6511 Keypad**	
17	PASSWORD LOCKED	PASS	Incorrect password entered Password activated, (by pressing E key at the top of the MMI tree)
18	CHECKSUM FAIL DEFAULTS LOADED	ERR2	Error reading data on power-up.
19	SUCCESS	GOOD	
20	FAILED	FAIL	
21	NEW PCODE FAILED	FAIL	Failed to save new product code or country data.
22	DEFAULTS LOADED	DATA	Loaded default fixed parameters.
23	KEY INACTIVE NO FREE LINKS	ERR3	Obsolete message
24	KEY INACTIVE LOCKED	ERR4	Obsolete message
25	QUADRATIC TORQUE UP TO CONFIRM	ND	Validate change to quadratic torque mode.
26	CONSTANT TORQUE UP TO CONFIRM	HD	Validate change to constant torque mode.

Alert Message IDs			
ID	**Message**		**Reason**
	6901 Keypad	**6511 Keypad**	
27	USING BACKUP APPLICATION	ERR5	Failed to load most recently save application, using previous copy. This applies to: Fixed parameter file, (APP.CFG) Fixed motor data file, (MOTOR1.MOT) Fixed persistent data file, (APP.PST) Default frequency and language file, (COUNTRY.SYS) Drive ID file, (DRIVE_ID.SYS), now obsolete.
28	NEW PCODE SUCCESS	CODE	Saved new product code.
29	CONFIG MODE LOCKED	CONF	Exiting configuration mode.
30	FILE SYSTEM CORRUPT	FILE	The file store is corrupted. All saved files are lost.
31	USING BACKUP POWER DATA	CODE	At least one copy of the stack eeprom data has been corrupted.
32	POWER DATA CORRUPT	CODE	All copies of the stack eeprom data have been corrupted.

Alert Message IDs			
ID	Message		Reason
	6901 Keypad	6511 Keypad	
33	NEW POWER DATA DEFAULTS LOADED	CODE	Power board data on the control board does not match that on the stack eeprom.
34	LANGUAGE DEFAULTS LOADED	LANG	Default language and frequency settings lost.
35	USING BACKUP LANGUAGE	LANG	Obsolete message
36	APPLICATION NOT FOUND	DATA	Attempt to save fixed parameter set before it is valid.
37	AUTOTUNE IN PROGRESS	ATN	
38	OPERATOR	OPER	Alert displayed while changing to the operator menu on pressing the PROG key.
39	DIAGNOSTIC	DIAG	Alert displayed while changing to the diagnostic menu on pressing the PROG key.
40	QUICK SETUP	SET	Alert displayed while changing to the quick setup menu on pressing the PROG key.
41	SETUP	PAR	Alert displayed while changing to the setup menu on pressing the PROG key.
42	SYSTEM	SYS	Alert displayed while changing to the system menu on pressing the PROG key.

Alert Message IDs			
ID	**Message**		**Reason**
	6901 Keypad	**6511 Keypad**	
43	SUPER USER TRUE	SUPR	Reserved for Parker SSD Drives.
44	INCOMPATIBLE POWER BOARD	ERR6	Power board 500v and/or underlap signals incompatible with selected product code.
45	CALIBRATION CHECKSUM FAIL	CAL	The control board calibration data is invalid.
46	INCOMPATIBLE PCB	PCB	Software is not compatible with this version of control card PCB.
47	INCOMPATIBLE POWER BOARD TYPE	TYPE	Stack has been marked as a 650 or Baldor stack
48	INCOMPATIBLE EEPROM FLAGS	FLGS	Reserved flags in stack eeprom are not zero. See comms command ri.
49	INCOMPATIBLE POWER BOARD CODE	CODE	Product code not compatible with this version of software.

Fault Finding

Problem	Possible Cause	Remedy
Drive will not power-up	Fuse blown	Check supply details, replace with correct fuse.
		Check Product Code against Model No.
	Faulty cabling	Check all connections are correct and secure.
		Check cable continuity
Drive fuse keeps blowing	Faulty cabling or connections wrong	Check for problem and rectify before replacing with correct fuse
	Faulty drive	Contact Parker SSD Drives
Cannot obtain HEALTH state	Incorrect or no supply available	Check supply details
Motor will not run at switch-on	Motor jammed	Stop the drive and clear the jam
Motor runs and stops	Motor becomes jammed	Stop the drive and clear the jam
Motor won't rotate or runs in reverse	Encoder fault	Check encoder connections
	Open circuit speed reference potentiometer	Check terminal

Table 10-1 Fault Finding

Control Board STATUS LED Indications

Colour	LED Indication	Description
OFF/GREEN	FLASH Off 95 : Green 5	Initialization, checking for network
GREEN/OFF	FLASH Green 50 : Off 50	OK – application running, no network
GREEN/OFF	FLASH Green 95 : Off 5	OK – application running, network OK
RED/GREEN	ALTERNATING Red 95 : Green 5	Node halted
RED/GREEN	ALTERNATING Red 5 : Green 95	Duplicate address in network
RED/OFF	FLASH Red 50 : Off 50	No configuration
RED/GREEN	ALTERNATNG Red 50 : Green 50	Application error

Chapter 10

Routine Maintenance and Repair

- Routine Maintenance
- Repair
  - Spares List
  - Component Replacement

Routine Maintenance

Periodically inspect the drive for build-up of dust or obstructions that may affect ventilation of the unit. Remove this using dry air.

Repair

The drives have been designed to be serviceable units. In the unlikely event of component failure, it is possible to replace the faulty item without having to replace the complete drive unit.

Replacement of components should only be carried out by electrically competent personnel with the knowledge/expertise required to perform the relevant operation.

i.e. in order to replace component parts; drive disassembly, rebuild and re-testing is required.

Saving Your Application Data

In the event of a repair, application data will be saved whenever possible. However, we advise you to copy your application settings before returning the unit.

Returning the Unit to Parker SSD Drives

Please have the following information available:

- The model and serial number - see the unit's rating label
- Details of the fault

Contact your nearest Parker SSD Drives Service Centre to arrange return of the item.

You will be given a *Returned Material Authorisation.* Use this as a reference on all paperwork you return with the faulty item. Pack and despatch the item in the original packing materials; or at least an anti-static enclosure. Do not allow packaging chips to enter the unit.

Disposal

This product contains materials which are consignable waste under the Special Waste Regulations 1996 which complies with the EC Hazardous Waste Directive - Directive 91/689/EEC.

We recommend you dispose of the appropriate materials in accordance with the valid environmental control laws. The following table shows which materials can be recycled and which have to be disposed of in a special way.

Material	Recycle	Disposal
metal	yes	no
plastics material	yes	no
printed circuit board	no	yes

The printed circuit board should be disposed of in one of two ways:

1. High temperature incineration (minimum temperature 1200°C) by an incinerator authorised under parts A or B of the Environmental Protection Act
2. Disposal in an engineered land fill site that is licensed to take aluminium electrolytic capacitors. Do not dispose of in a land fill site set aside for domestic waste.

Packaging

During transport our products are protected by suitable packaging. This is entirely environmentally compatible and should be taken for central disposal as secondary raw material.

Spares List

Parker SSD Drives are able to provide guidance regarding the necessary component part to be replaced. The serviceable component parts are listed below.

Electro-Mechanical Parts

The selection of the following items are product/kW rating dependant.

Drive	Main Cooling Fan		Motor Start Capacitor for Main Cooling fan		Internal Extractor Fan	
	Fan Voltage		Fan Voltage		Fan Voltage	
	115V	230V	115V	230V	115V	230V
Frame G 110-132kW	DL389775	DL464085	CY389841	CY464087	-	-
Frame G 160-180kW	DL465651 U115	DL465651 U230	CY466780 U300	CY466780 U080	-	-
Frame H	DL389776 U001	DL464086 U001	CY389842	CY464088	-	-
Frame J	DL389776 U001	DL464086 U001	CY389842	CY464088	DL049612*	DL049612*
** 2 fans wired in series for 230V rating*						

Drive	Phase Assembly	Brake Unit Assembly
Frame G 110KW	LA465082U001	LA464083U001
Frame G 132KW	LA465082U002	
Frame G 160KW	LA465082U003	
Frame G 180KW	LA465082U004	
Frame H 200-220KW	LA465082U005	LA465083U002
Frame H 250-280KW	LA465082U006	
Frame J 315KW	LA465082U007	LA465083U003

Printed Circuit Boards

The printed circuit boards listed below are common within the 890 range of drives.

Description	Part Number
Switch Mode Power Supply PCB	AH464883U101
Power Control PCB	AH464871U000
Line Suppression PCB	AH389192U001

Component Replacement

Having identified the faulty component part and taken delivery of replacement part(s) the following replacement procedure should be carefully adhered to.

WARNING

FAILURE TO FOLLOW PROCEDURE MAY RESULT IN DAMAGE TO THE DRIVE AND POSSIBLE ELECTRICAL SHOCK HAZARD! PERSONNEL PERFORMING COMPONENT REPLACEMENT PROCEDURES MUST BE ELECTRICALLY COMPETENT AND POSSESS THE KNOWLEDGE /EXPERTISE REQUIRED TO PERFORM THE RELEVANT OPERATION

BEFORE PERFORMING MAINTENANCE ON THIS UNIT, ENSURE ISOLATION OF THE MAIN SUPPLY TO TERMINALS L1, L2 AND L3.

WAIT FOR AT LEAST 5 MINUTES FOR THE DC LINK TERMINALS (DC+ AND DC-) TO DISCHARGE TO SAFE VOLTAGE LEVELS (<50V), FAILURE TO DO SO CONSTITUTES AN ELECTRICAL SHOCK HAZARD.

Caution

This equipment contains electrostatic discharge (ESD) sensitive parts. Observe static control precautions when handling, installing and servicing this product.

Printed Circuit Board (PCB) Replacement

Observe all electrical warnings and static handling precautions at the front of this section - 'Component Replacement'

Power Control PCB and CALIBRATION Card Replacement

To Access the Boards

1. Remove the drive's top and bottom terminal cover (plastic) via 2 off ¼ turn fasteners at top and bottom of drive.
2. Remove drive front cover (metal) which is attached via 4 off ¼ turn fasteners (take care not to damage PCBs beneath cover).
3. It is now possible to view the power control PCB and Cal Card as shown in figure 10.1.
4. Take note of PCB connectivity when removing and replacing PCBs, ensuring that PCB is re-connected correctly.

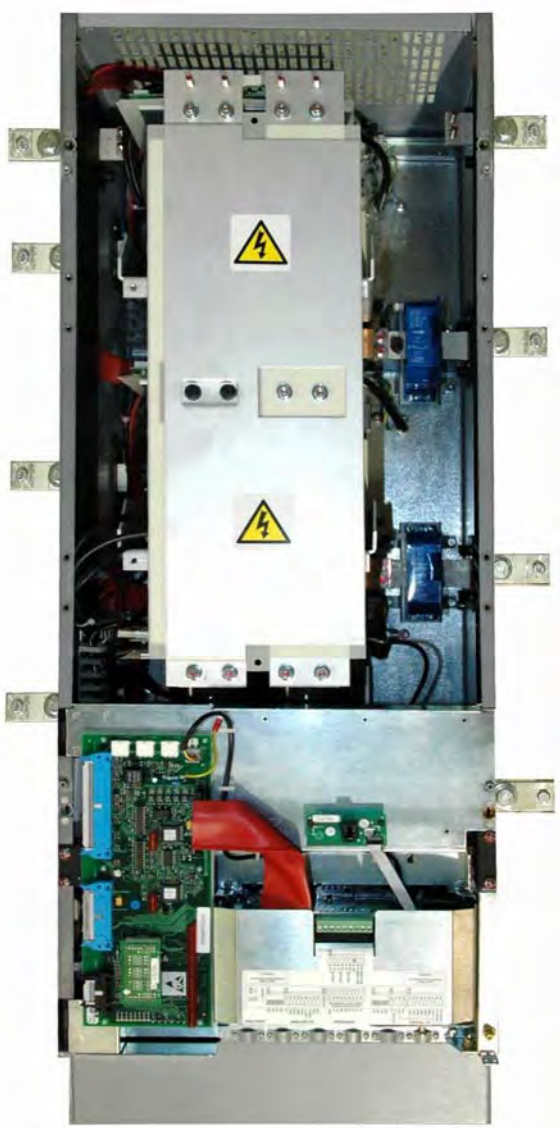

Note ***Refer to Appendix A to access the Control Board and fit/remove Option Cards.***

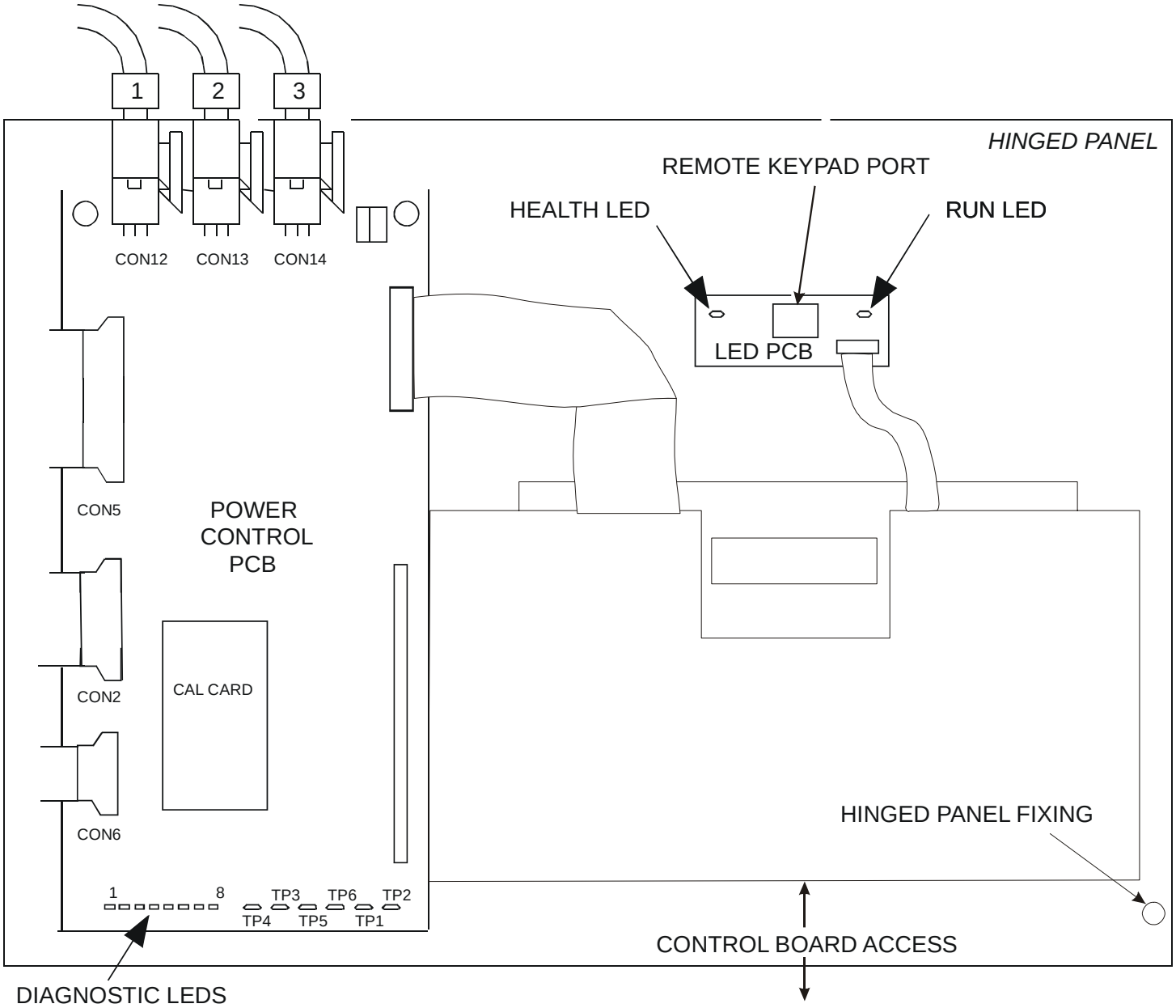

Figure 10.1 View under the Lower Terminal Cover

SMPS PCB Replacement

1. Follow steps 1 to 3 of procedure ‘Power Control PCB and CALIBRATION Card Replacement’. Release hinged panel fixing - 1 off ¼ turn fastener as shown in Figure 10.1.
2. The SMPS PCB may now be viewed on reverse side of hinged panel as shown below.

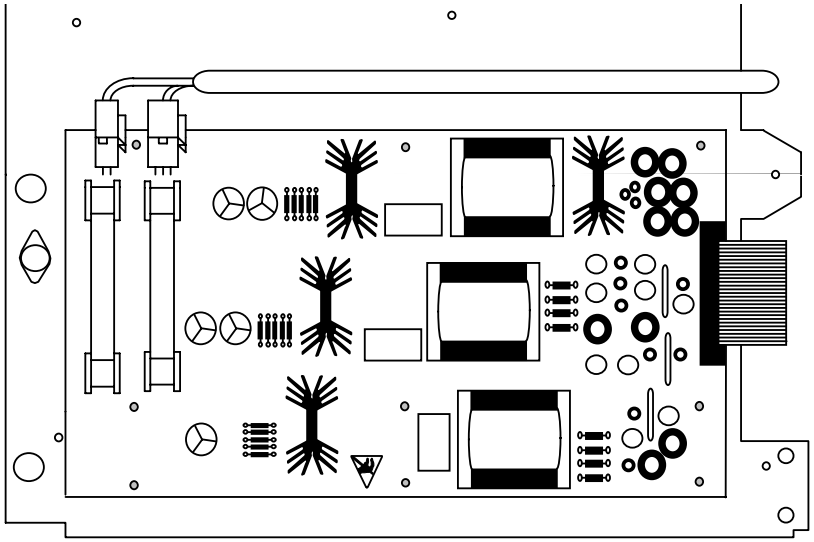

AH464883U101

Figure 10.2 SMPS PCBs

3. Take note of PCB connectivity and carefully remove and replace PCB, ensuring that PCB is re-connected correctly. Correctly refit any insulating parts that may be present.
4. Re-fit hinged panel and ¼ turn fastener as shown in figure 10.1.
5. Replace drive front cover (metal) which is attached via 4 off ¼ turn fasteners (take care not to damage PCBs beneath cover).
6. Re-connect 4-way op-station cable to LED PCB (see figure 10.1).
7. Re-fit drive top and bottom terminal cover (plastic) via 2 off ¼ turn fasteners at top and bottom of drive.

Line Suppression AH389192 PCB Replacement

1. Remove drive top and bottom terminal cover (plastic) via 2 off ¼ turn fasteners at top and bottom of drive.
2. Disconnect 4-way op-station cable from LED PCB (see figure 10.1).
3. Remove drive front cover (metal) which is attached via 4 off ¼ turn fasteners (take care not to damage PCBs beneath cover).
4. Release hinged panel fixing - 1 off ¼ turn fastener as shown in figure 10.1.
5. The line suppression PCB is located inside drive enclosure beneath the hinged panel and can be visually identified as shown below.
6. Take note of PCB connectivity and carefully remove and replace PCB, ensuring that PCB is re-connected correctly.
7. Re-fit hinged panel and ¼ turn fastener as shown in figure 10.1.

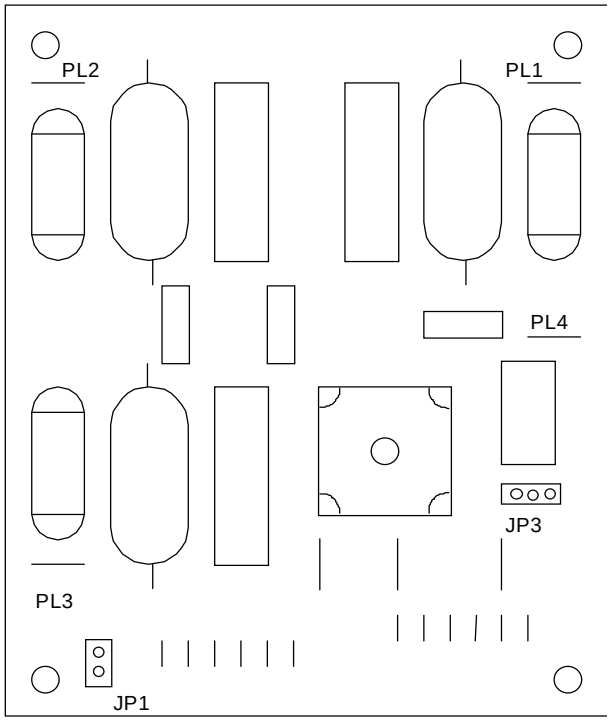

Figure 10.3 Line Suppression PCB

8. Replace drive front cover (metal) which is attached via 4 off ¼ turn fasteners (take care not to damage PCBs beneath cover).
9. Re-connect 4-way op-station cable to LED PCB (see figure 10.1).
10. Re-fit drive top and bottom terminal cover (plastic) via 2 off ¼ turn fasteners at top and bottom of drive.

Fan Replacement

Observe all electrical warnings and static handling precautions at the front of this section - 'Component Replacement'.

It is possible to replace the drive main cooling fan should the need arise. Having replaced the main cooling fan, ensure that the wiring loom routing/fixing is preserved. This is an electrical safety requirement.

WARNING

Remove all power to drive, mains and auxiliary and lock out supplies.

Frame G 250-300HP/160-200kW Drive Main Cooling Fan Replacement

Kit LA471343U115 is for 115VAC auxiliary supplies

Kit LA471343U230 is for 230VAC auxiliary supplies

Application

The fan incorporates a built-in capacitor, an adaptor plate, and a cable assembly with connectors. When fitting the new fan assembly and bracket, mount the fan on the fan-mounting studs using the 4 x M4 plain nuts as spacers. A new grommet and cable clips are supplied to lead the fan cable along the inside of the suppression board-mounting bracket prior to fitting the fan.

Procedure

Required Tools

A. #3 Phillips or posidrive screwdriver

B. #2 Phillips or posidrive screwdriver

C. 8mm hex nut driver or socket wrench with 150mm (6") extension

Fan Removal

1. Remove drive top and bottom terminal cover (plastic) via 2 off ¼ turn fasteners at top and bottom of drive (B).
2. Disconnect 4-way op-station cable from the LED PCB.
3. Remove drive front cover (metal) which is attached via 4 off ¼ turn fasteners (take care not to damage PCBs beneath cover) (B).
4. Open control door assembly, 1x quarter turn.
5. Remove lower fan housing with 6x M6 sem screws 4 Nm (A).
6. Detach cable assembly from fan.
7. Remove fan and bracket from drive - 4 x M5 sem nuts (C).

Installation of New Fan

1. Fit 4x M5 plain hex nuts (supplied in kit) on chassis studs to 4 Nm as spacers (C). Refer to Figure 10-4.
2. Fit new ½” grommet to left-hand bracket hole if required. Refer to Figure 10-5. This will require removing the 3 wires from the from the left hand terminal block. Refer to Figures 10-8 and 10-9. Feed the cable through cable clip (Figure 10-7).
3. Attach cable assembly to fan. Fit fan and bracket to drive with 4x M5 sem nuts from original fan; tighten to 4 Nm (C).
4. Check that fan spins freely and that nothing has fallen into the blades
5. Reattach lower fan housing with 6x M6 sem screws 4 Nm (A).
6. Close control door assembly, 1x quarter turn.
7. Refit drive front cover (metal), 4x quarter turn screws (B).
8. Re-attach op-station cable to LED PCB.
9. Refit top and bottom terminal covers with the 2x quarter-turn fasteners.
10. Apply auxiliary supply and check that fan is functioning
11. Apply mains supply and return drive to service.

Illustrations : Frame G Drive
Main Cooling Fan Replacement

Figure 10-4

Figure 10-5

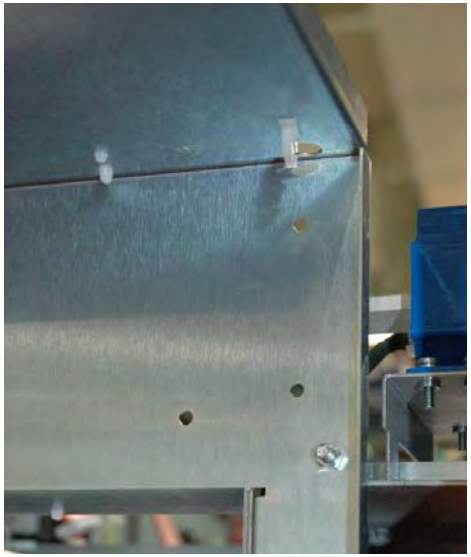

Figure 10-6

Figure 10-7

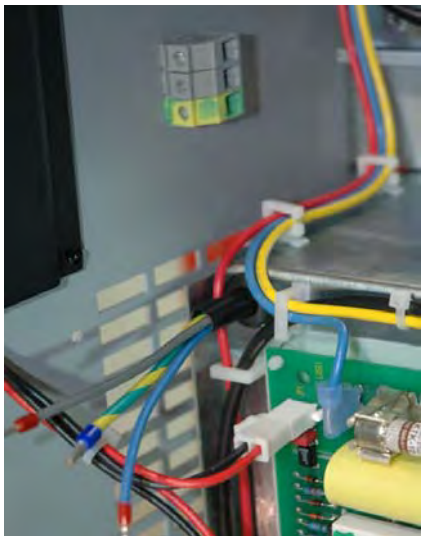

Figure 10-8

Figure 10-9

Frame H Drive Main Cooling Fan and Fan Start Capacitor Replacement

1. Remove drive top and bottom terminal cover (plastic) via 2 off ¼ turn fasteners at top and bottom of drive.
2. Disconnect 4-way op-station cable from LED PCB (see figure 10.1).
3. Remove drive front cover (metal) which is attached via 4 off ¼ turn fasteners (take care not to damage PCBs beneath cover).
4. Remove Main Fan housing (see figure 3.1).
5. Release hinged panel fixing - 1 off ¼ turn fastener as shown in figure 10.1.
6. Take note of fan and fan start capacitor wiring. Disconnect fan and fan start capacitor wiring.
7. Remove fan mounting nuts. Remove fan start capacitor mounting nuts(s). Remove fan and fan start capacitor taking care not to damage other components within drive.
8. Replace fan and fan start capacitor taking care not to damage other components within drive.
9. Re-connect fan wiring loom and ensure that electrical safety isolation is preserved. (refer to wiring diagram HJ463151D001 at the end of this section.)
10. Re-fit fan housing (see figure 3.1).
11. Re-fit drive front cover (metal) via 4 off ¼ turn fasteners (take care not to damage PCBs beneath cover).
12. Re-connect 4-way op-station cable to LED PCB (see figure 10.1).
13. Re-fit drive top and bottom terminal cover (plastic) via 2 off ¼ turn fasteners at top and bottom of drive.

Frame J Drive Main Cooling Fan, Internal Extractor Fan and Main Fan Start Capacitor Replacement

In addition to the main cooling fan, the Frame J drive also has two internal 120mm square fans. The main cooling fan, internal cooling fans and main cooling fan start capacitor are mounted on the bottom panel of the drive (See drawing HG 463009G001 - Chapter 4). Having replaced the fan, ensure that the fan wiring loom routing/fixing is preserved. Refer to wiring diagram HJ463151D002 at the end of this section. ***This is an electrical safety requirement***.

Replacement of Fan Start Capacitor

1. Disconnect fan start capacitor wiring (two faston connectors at top of capacitor).
2. Remove fan start capacitor mounting nuts(s).
3. Replace and reconnect start capacitor, taking care not to damage other components within drive.

Replacement of Main Cooling Fan Only

1. Disconnect fan supply wire loom at terminal block on bottom panel of drive. Note the colour coding of the connections to the terminal block
2. Remove fan mounting nuts. Remove fan and fan start capacitor taking care not to damage other components within drive.
3. Re-connect fan wiring loom and ensure that electrical safety isolation is preserved.
4. Refit the lower panel assembly to the drive.

Replacement of Internal 120mm Square Cooling Fans

1. While supporting the fan, remove the 6 M6 screws on the very bottom of the drive.
2. Lower the fan and panel assembly out of the drive.
3. Remove the lower panel assembly.
4. Disconnect supply cable at faulty fan.
5. Replace fan.
6. Reconnect supply cable.
7. Re-fit lower panel assembly.

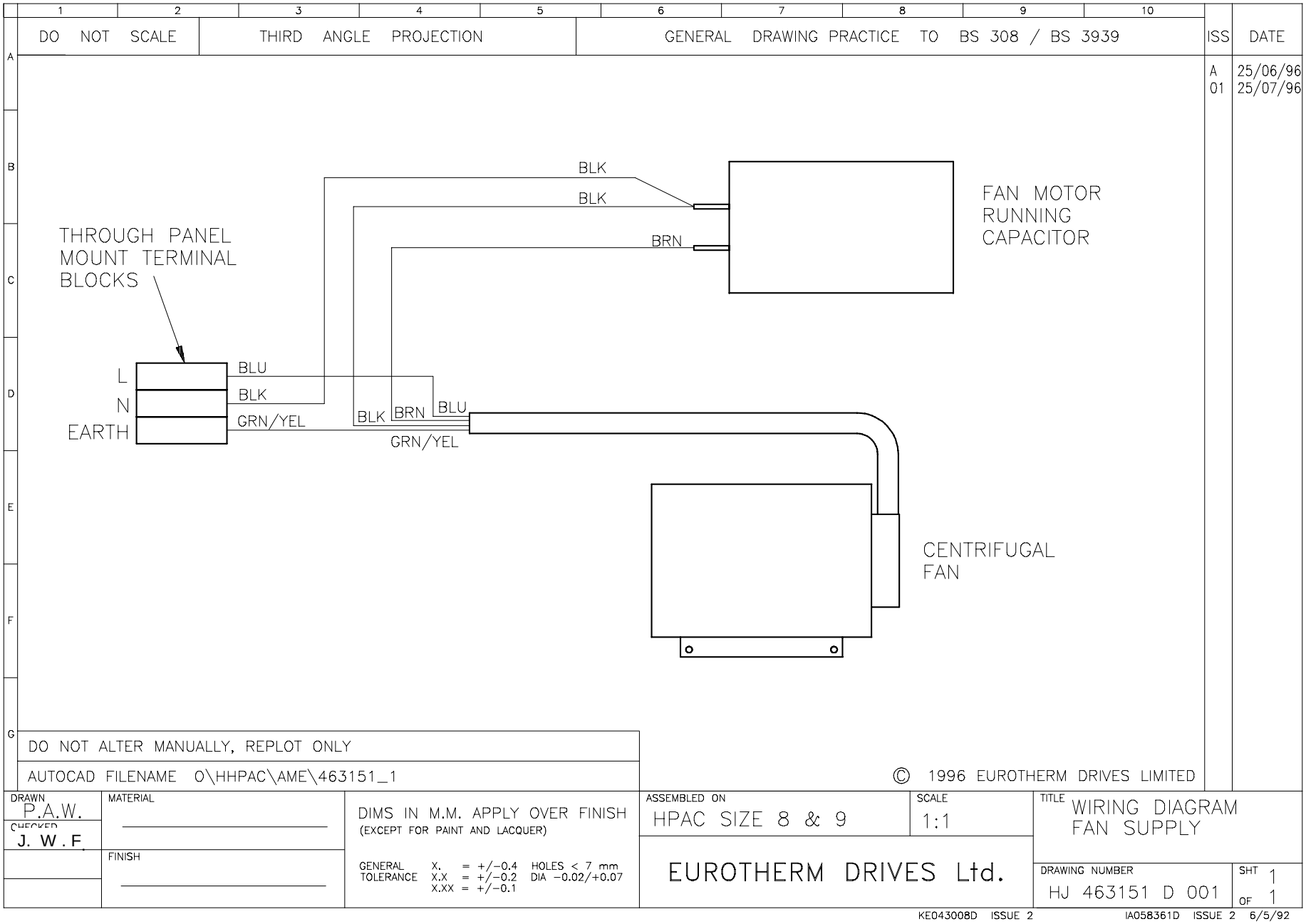
DO NOT SCALE
THIRD ANGLE PROJECTION
GENERAL DRAWING PRACTICE TO BS 308 / BS 3939
ISS
DATE
A 25/06/96
01 25/07/96
BLK
BLK
BRN
FAN MOTOR
RUNNING
CAPACITOR
THROUGH PANEL
MOUNT TERMINAL
BLOCKS
L
N
EARTH
BLU
BLK
GRN/YEL
BLK
BRN
BLU
GRN/YEL
CENTRIFUGAL
FAN
DO NOT ALTER MANUALLY, REPLOT ONLY
AUTOCAD FILENAME O\HHPAC\AME\463151_1
© 1996 EUROTHERM DRIVES LIMITED
DRAWN
P.A.W.
CHECKED
J. W. F.
MATERIAL
FINISH
DIMS IN M.M. APPLY OVER FINISH
(EXCEPT FOR PAINT AND LACQUER)
GENERAL TOLERANCE X. = +/-0.4 X.X = +/-0.2 X.XX = +/-0.1
HOLES < 7 mm DIA -0.02/+0.07
ASSEMBLED ON
HPAC SIZE 8 & 9
SCALE
1:1
EUROTHERM DRIVES Ltd.
TITLE
WIRING DIAGRAM
FAN SUPPLY
DRAWING NUMBER
HJ 463151 D 001
SHT 1
OF 1
KE04300BD ISSUE 2
IA058361D ISSUE 2 6/5/92

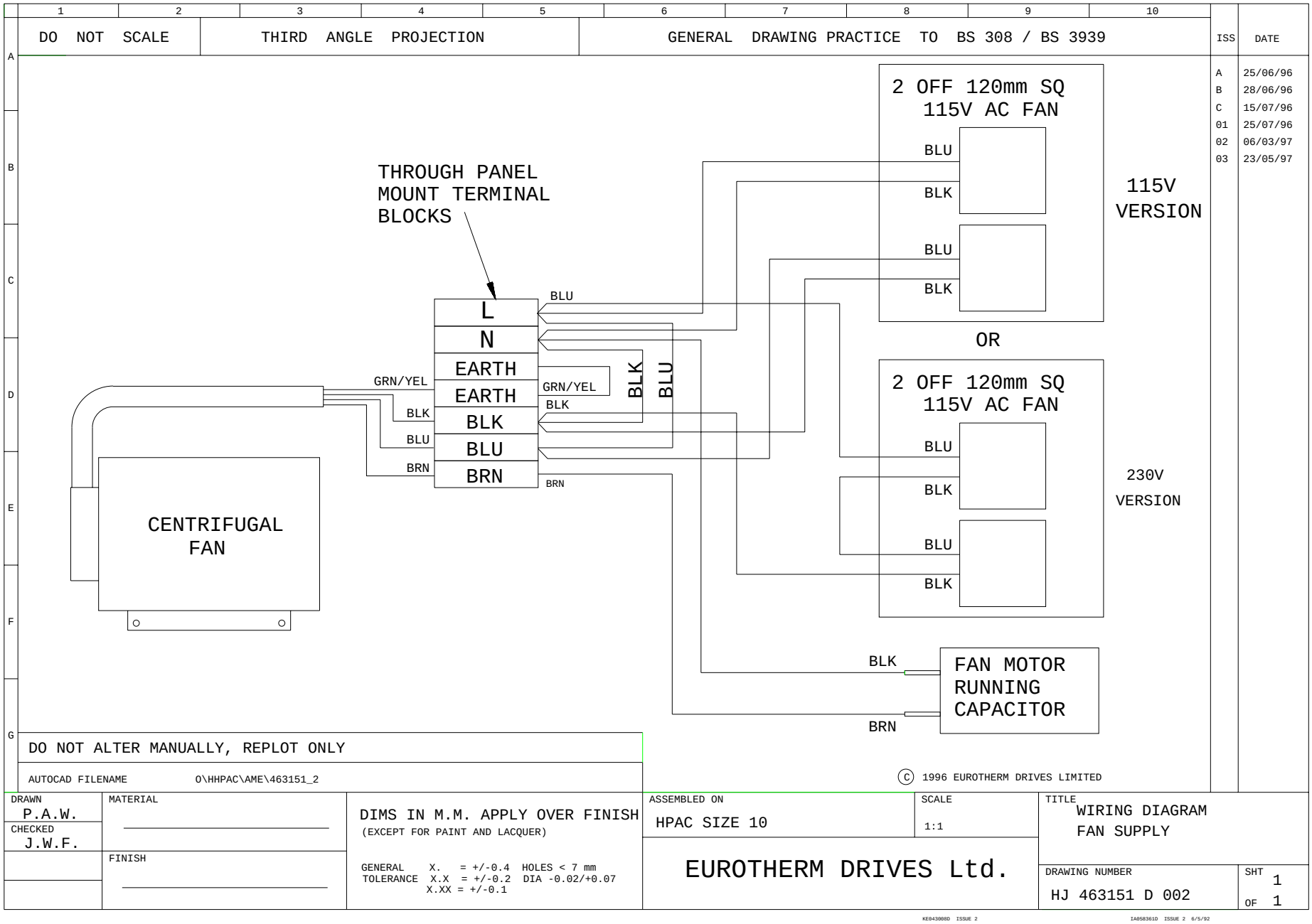
DO NOT SCALE
THIRD ANGLE PROJECTION
GENERAL DRAWING PRACTICE TO BS 308 / BS 3939
ISS
DATE
A 25/06/96
B 28/06/96
C 15/07/96
01 25/07/96
02 06/03/97
03 23/05/97
2 OFF 120mm SQ
115V AC FAN
BLU
BLK
BLU
BLK
115V
VERSION
OR
2 OFF 120mm SQ
115V AC FAN
BLU
BLK
BLU
BLK
230V
VERSION
THROUGH PANEL
MOUNT TERMINAL
BLOCKS
L
N
EARTH
EARTH
BLK
BLU
BRN
BLU
GRN/YEL
GRN/YEL
BLK
BLK
BLU
GRN/YEL
BLK
BLU
BRN
BRN
CENTRIFUGAL
FAN
BLK
BRN
FAN MOTOR
RUNNING
CAPACITOR
DO NOT ALTER MANUALLY, REPLOT ONLY
AUTOCAD FILENAME O\HHPAC\AME\463151_2
© 1996 EUROTHERM DRIVES LIMITED
DRAWN
P.A.W.
CHECKED
J.W.F.
MATERIAL
FINISH
DIMS IN M.M. APPLY OVER FINISH
(EXCEPT FOR PAINT AND LACQUER)
GENERAL X. = +/-0.4 HOLES < 7 mm
TOLERANCE X.X = +/-0.2 DIA -0.02/+0.07
X.XX = +/-0.1
ASSEMBLED ON
HPAC SIZE 10
SCALE
1:1
EUROTHERM DRIVES Ltd.
TITLE
WIRING DIAGRAM
FAN SUPPLY
DRAWING NUMBER
HJ 463151 D 002
SHT 1
OF 1
KE043008D ISSUE 2
IA058361D ISSUE 2 6/5/92

Phase Assembly Replacement

The drive power stage consists of 3 identical phase assemblies. Each phase assembly consists of heatsink, IGBT module plus gate drive pcb, 1/3 of the input bridge, DC link capacitors and PCB 'AH389193'. It is intended that the whole phase assembly be carried as a spare part and replaced as a unit. Spare phase assemblies are available for each of the three drive frame sizes. The spare phase assembly comes with a 'service tray' which is designed to assist in phase assembly replacement. It also protects the other delicate components within the drive during the replacement procedure.

Observe all electrical warnings and static handling precautions at the front of this section - 'Component Replacement'.

Supplied Parts

- Service plate.
- M5 screws (2 off)
- Heatsink clamps (2 off 890 frame G, 4 off 890 frames H & J) - used to retain phase assembly in packaging. They are to be reused in the replacement assembly if the original clamps are excessively distorted.
- Insulating caps - 3 off

Required Tools

- Drive ratchet wrench, 300mm extension, 8mm & 10mm socket.
- Drive No. 2 & 3 Posidrive bits.

Phase Assembly Removal Procedure

Refer to Figure 10.10 - 'Power Component Identification' at the end of this section.

1. Remove drive top and bottom terminal cover (plastic) via 2 off ¼ turn fasteners at top and bottom of drive.

2. Disconnect 4-way op-station cable from LED PCB (see figure 10.1).
3. Remove drive front cover (metal) which is attached via 4 off ¼ turn fasteners (take care not to damage PCBs beneath cover).
4. Remove DC+ and DC- bus bars at the top of the drive. - remove 2 M6 captive nuts at the capacitor joining plate assembly and 2 M6 captive nuts at the external connection busbars. (300 mm long extension recommend for this step).
5. Remove capacitor joining plate assembly via M6 captive washer nuts. Note that the nuts on the left hand side of the M2 phase are covered with plastic insulating caps. ***These caps are a safety requirement and must be fitted***.
6. If removing the M3 phase limb from an drive which has a Brake unit fitted, it will be necessary to remove the brake connecting plate. (Refer to Chapter 5).
7. Remove 2 M6 captive nuts from input busbar on phase limb to be replaced. (300 mm long extension recommended for this step).
8. Remove 2 M6 hex bolts and washers from output busbar on phase limb to be replaced (300mm long extension recommended for this step).
9. Disconnect cable(s) from printed circuit board on phase limb to be replaced. Take note of PCB connectivity.
10. Disconnect earth wire on phase limb to be replaced by removing 1 off M5 captive nut at chassis.
11. Insert service plate underneath phase limb to be removed. Secure to side panels of drive using the two M5 screws supplied.
12. 890 frame G : Remove heatsink clamp screws (3 per phase assembly) and remove clamp plates.
    890 frames H & J : Loosen heatsink clamps (4 per phase assembly) and rotate through 90°.
13. Carefully remove phase limb assembly.

Phase Assembly Replacement Procedure

1. Replace any badly distorted heatsink clamps with spare clamps provided. (Clamps used in packaging).
2. Carefully slide replacement phase limb assembly into position making sure that the studs on the input busbars (left-hand side) located in the holes provided on the phase limb busbar. Re-fit nuts and washers, but do not tighten.
3. Re-fit output busbar bolts and washers and tighten to 6.8 NM torque.
4. Secure phase limb assembly to chassis using heatsink clamps.
5. Remove service plate.
6. Tighten input busbar nuts to 6.8 NM torque.
7. Secure earth wire to chassis - 4NM torque.
8. Reconnect cable(s) to phase limb assembly printed circuit board.
9. Refit capacitor joining plate with M6 captive nuts to 6.8 NM torque.
10. Refit insulating caps to M2 (middle) left-hand side capacitor joining plate nuts.
11. Refit DC busbars 2 off M6 captive nuts on capacitor joining plate tightened to 6.8 NM torque and 2 off M6 captive nuts at the external connection busbars tightened to 6.8 NM torque.
12. Refit brake connection plate and top cover if required (refer to Chapter 5)
13. Refit drive front cover (metal) via 4 off ¼ turn fasteners (take care not to damage PCBs beneath cover).
14. Reconnect 4-way op-station cable to LED PCB (see figure 10.1).
15. Refit drive top and bottom terminal cover (plastic) via 2 off ¼ turn fasteners at top and bottom of drive.

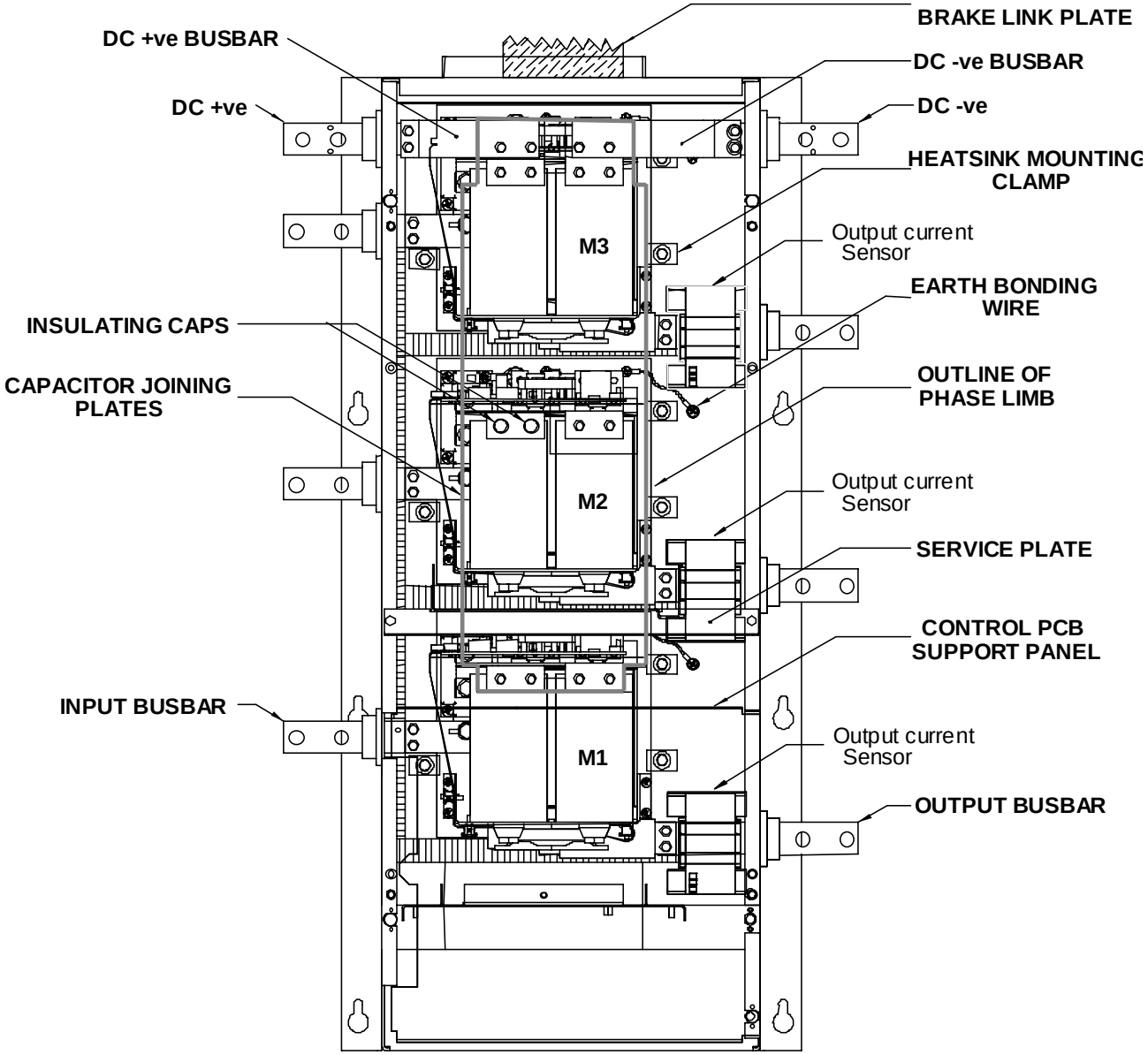

Figure 10.10 Power Component Identification (Frame G)

Appendix A
Options

This Chapter contains information about various options that can be fitted to the 890 range.

♦ Option Cards

Option Cards

There are a range of Option Cards that may come factory-fitted to the 890SD drive, or are available for customer fitting.

The options provide for fieldbus communications and speed feedback and are mounted on to the Control Board.

Refer to the Technical Manual suppled with each Option Card for detailed instructions.

Option Card A slot

Fieldbus communications option cards for all major protocols

Option Card B slot

Fieldbus communications option cards for all major protocols (FireWire is currently fitted to this slot only)

Option Card F slot

Speed feedback option cards

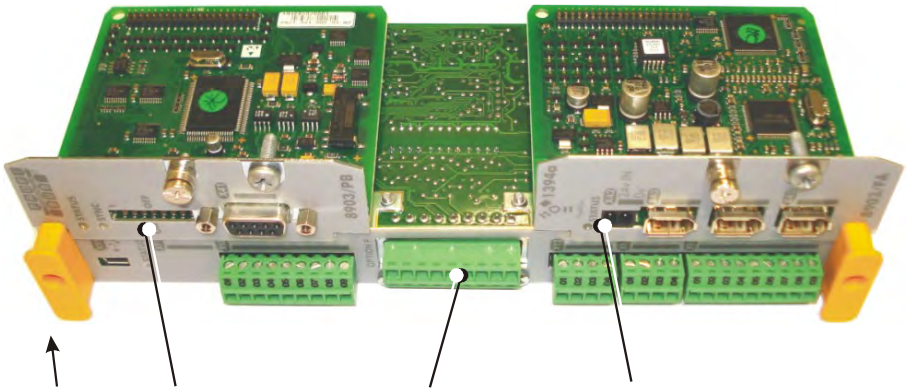

Removing the Control Board

WARNING!

Disconnect all sources of power before attempting installation. Injury or death could result from unintended actuation of controlled equipment.

Caution

This option contains ESD (Electrostatic Discharge) sensitive parts. Observe static control precautions when handling, installing and servicing this option.

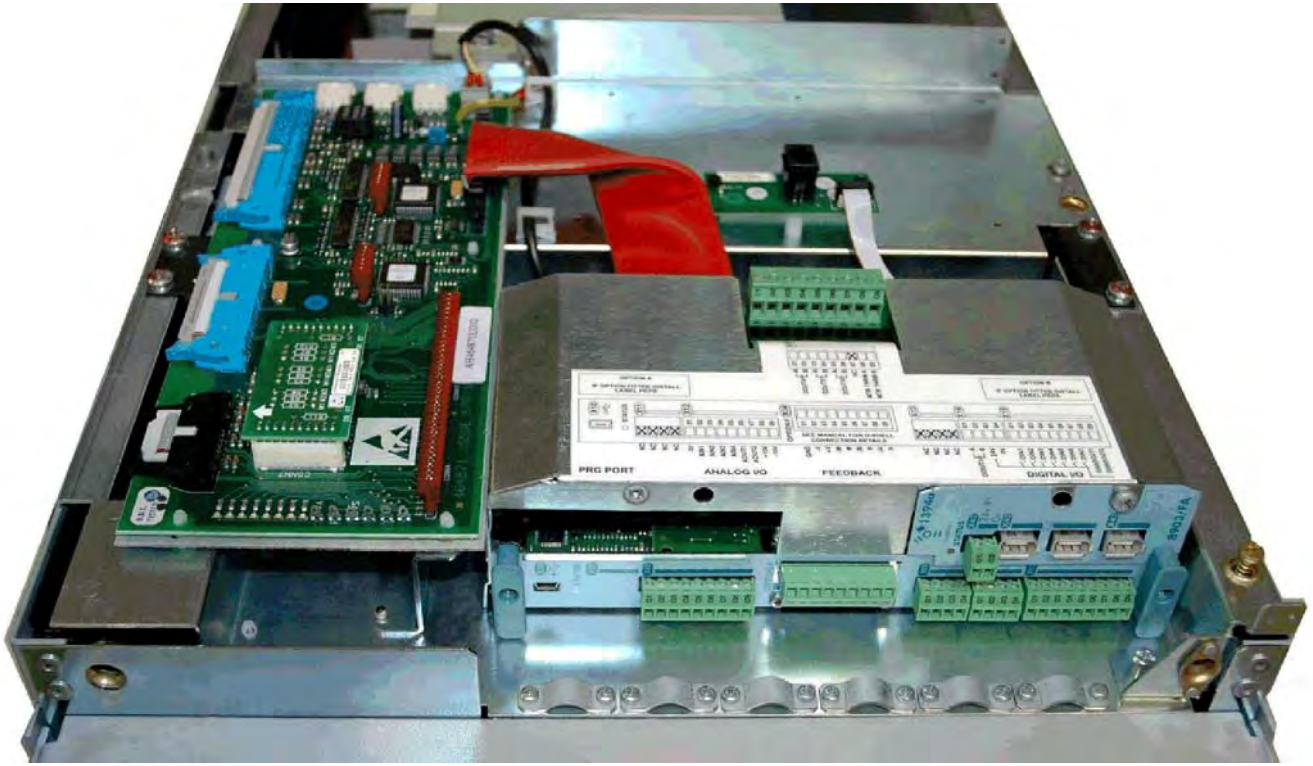

Options

1. Remove the lower front cover from the drive.
2. Undo the captive screws (A) securing Option A and Option B, if fitted.
3. Undo the captive screws (B) located in the handles of the control board. Gently pull down on the handles to withdraw the board from the drive, supporting any attached option boards. Note that the boards are sliding in slots.
4. Refer to the Option Card Technical Manual for fitting/wiring details.
5. Fit the control board (with attached options) into the drive. Push the board gently to engage the connectors on the rear edge of the control board with the drive's connectors.
6. Tighten the Option A and Option B screws, if fitted.
7. Tighten the captive screws (B) located in the handles of the control board.
8. Fit the lower front cover to the drive.

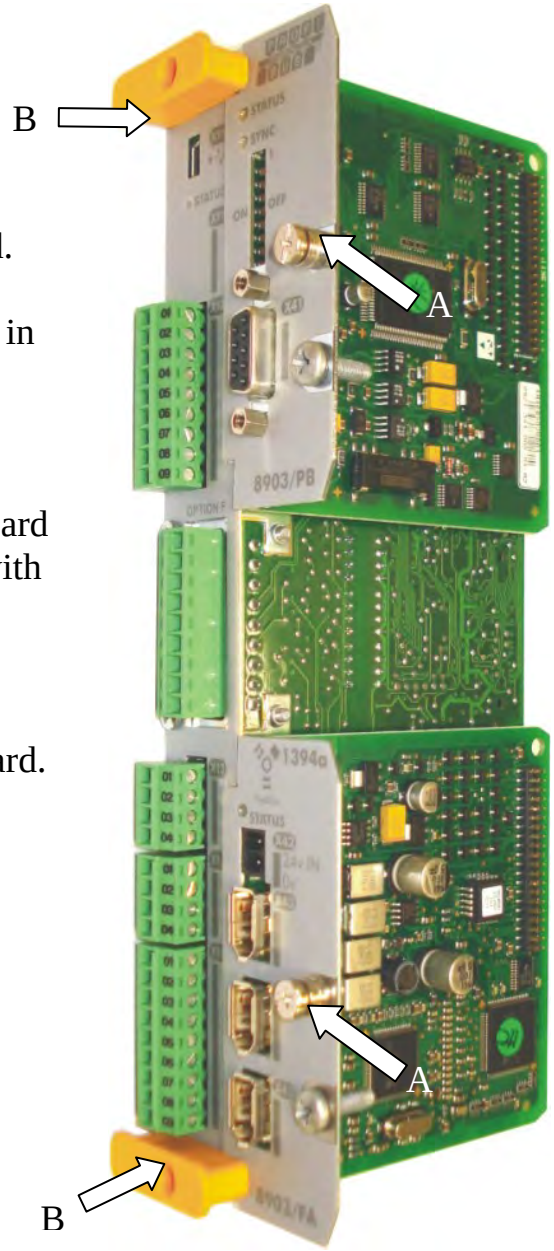

Figure 2 Control board with an Option Card correctly mounted

Appendix B
Sequencing Logic

The 890SD Standalone Drive's reaction to commands is defined by a state machine. This determines which commands provide the demanded action, and in which sequence.

- Main sequencing states
- State outputs of the SEQUENCING LOGIC function block
- Transition of states
- State diagram
- External control of the drive

Principle State Machine

Main Sequencing States

The main sequencing state of the unit is indicated by an enumerated value given by the parameter SEQUENCER STATE under SEQUENCING LOGIC menu.

Enumerated Value	Main Seq State	Standard Name	Description
0	START DISABLED	Switch On Disabled	The Drive will not accept a switch on command
1	START ENABLED	Ready To Switch On	The Drive will accept a switch on command
2	SWITCHED ON	Switched On	The Drive's stack is enabled
3	READY	Ready	Waiting for Contactor to be closed
4	ENABLED	Enabled	The Drive is enabled and operational
5	F-STOP ACTIVE	Fast-Stop Active	Fast stop is active
6	TRIP ACTIVE	Trip Active	The Drive is processing a trip event
7	TRIPPED	Tripped	The Drive is tripped awaiting trip reset

Table B-1 Enumerated Values for the SEQUENCING LOGIC Function Block

State Outputs of the SEQUENCING LOGIC Function Block

The following table shows the states of individual parameters for the SEQUENCING LOGIC function block required to produce the condition of the MAIN SEQ STATE parameter.

	START DISABLED	START ENABLED	SWITCHED ON	READY	ENABLED	F-STOP ACTIVE	TRIP ACTIVE	TRIPPED
Tripped	FALSE	FALSE	FALSE	FALSE	FALSE	FALSE	TRUE	TRUE
Running	FALSE	FALSE	FALSE	FALSE	TRUE	FALSE	FALSE	FALSE
Jogging	FALSE	FALSE	FALSE	FALSE	Note 1	FALSE	FALSE	FALSE
Stopping	FALSE	FALSE	FALSE	FALSE	Note 2	TRUE	FALSE	FALSE
Output Contactor	Depends on previous state	Depends on previous state	TRUE	TRUE	TRUE	TRUE	TRUE	FALSE
Switch On Enable	FALSE	TRUE	TRUE	TRUE	TRUE	TRUE	TRUE	FALSE
Switched On	FALSE	FALSE	TRUE	TRUE	TRUE	TRUE	TRUE	FALSE
Ready	FALSE	FALSE	FALSE	TRUE	TRUE	TRUE	TRUE	FALSE
Healthy	TRUE	TRUE	TRUE	TRUE	TRUE	TRUE	FALSE	FALSE Note 3

Table B-2 Parameter States for the MAIN SEQ STATE Parameter

Note ***1. JOGGING is set TRUE once the jog cycle has started, and remains TRUE until the jog cycle has finished which is when either the stop delay has finished or another mode is demanded.***

2. STOPPING is set TRUE during the stopping cycles commanded by either RUNNING going low, JOGGING going low or if Fast Stop is active, i.e. SEQUENCING LOGIC is F-STOP ACTIVE.

3. Once Run and Jog are both FALSE, HEALTHY O/P will be set TRUE.

Transition of States

The transition matrix describes what causes the transition from one state to another, for example see number 4 below: the transition from “Ready To Switch On” to “Trip Active” is triggered by “TRIP” going TRUE. Note – where a state has more than one exit transition, the transition with the lowest number has priority.

Refer to the following table and state diagram.

	Current State	Next State	Cause (FALSE to TRUE)
1	Power Up	Switch On Disabled	Power-Up, Restore Configuration or exit from Configuration mode.
2	Switch On Disabled	Trip Active	Trip
3	Switch On Disabled	Ready To Switch On	RUN = FALSE, JOG = FALSE, NOT FAST STOP = TRUE and NOT COAST STOP = TRUE
4	Ready To Switch On	Trip Active	Trip
5	Ready To Switch On	Switch On Disabled	NOT COAST STOP = FALSE or NOT FAST STOP = FALSE
6	Ready To Switch On	Switched On	RUN = TRUE or JOG = TRUE

	Current State	Next State	Cause (FALSE to TRUE)
7	Switched On	Trip Active	Trip (includes CONTACTOR CLOSED = FALSE after 10 seconds)
8	Switched On	Switch On Disabled	NOT COAST STOP = FALSE or NOT FAST STOP = FALSE
9	Switched On	Ready To Switch On	RUN = FALSE and JOG = FALSE
10	Switched On	Ready	CONTACTOR CLOSED = TRUE and defluxed
11	Ready	Trip Active	Trip (includes CONTACTOR CLOSED = FALSE)
12	Ready	Switch On Disabled	NOT COAST STOP = FALSE or NOT FAST STOP = FALSE
13	Ready	Ready To Switch On	RUN = FALSE and JOG = FALSE
14	Ready	Enabled	ENABLE = TRUE
15	Enabled	Trip Active	Trip (includes CONTACTOR CLOSED = FALSE)
16	Enabled	Switch On Disabled	NOT COAST STOP = FALSE
17	Enabled	Fast Stop Active	NOT FAST STOP = FALSE
18	Enabled	Ready To Switch On	RUN = FALSE, JOG = FALSE and stopping complete
19	Enabled	Ready	ENABLE = FALSE

	Current State	Next State	Cause (FALSE to TRUE)
20	Fast Stop Active	Trip Active	Trip (includes CONTACTOR CLOSED = FALSE)
21	Fast Stop Active	Switch On Disabled	Fast Stop timer expired or FAST STOP MODE = Coast Stop OR Drive at zero setpoint
22	Trip Active	Tripped	Stack quenched
23	Tripped	Switch On Disabled	Trip = FALSE and TRIP RESET 0->1 transition

Table B-3 Transition Matrix

State Diagram

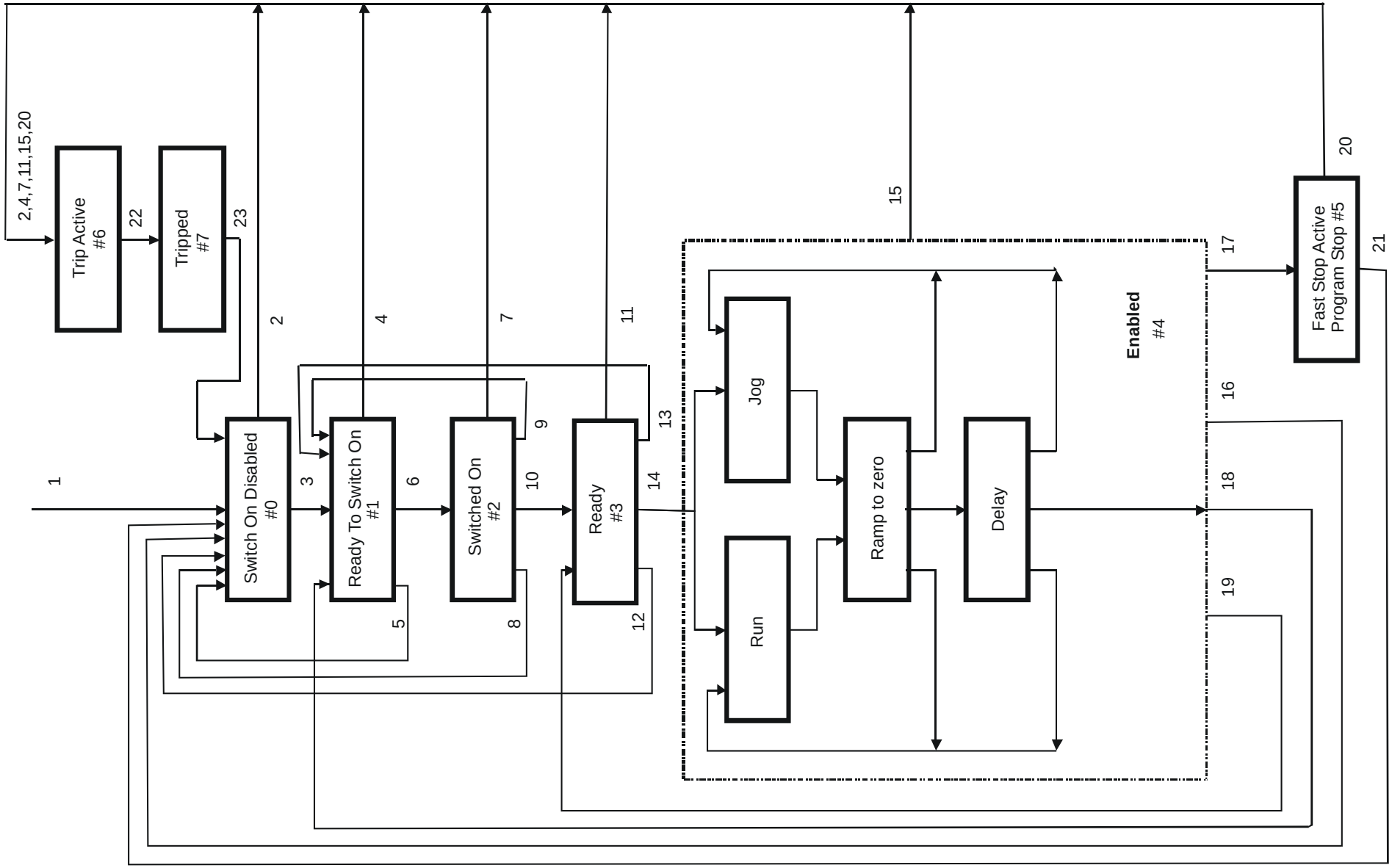

External Control of the Drive

Communications Command

When sequencing is in the Remote Comms mode, the sequencing of the Drive is controlled by writing to the COMMS COMMAND (PREF 95.05).

The COMMS COMMAND parameter is a 16-bit word based on standard fieldbus drive profiles. Some bits are not implemented in this release (see “Supported” column of the table below).

Bit	Name	Description	Supported	Required Value
0	Switch On	OFF1 Operational	✓	
1	(Not) Disable Voltage	OFF2 Coast Stop	✓	
2	(Not) Quick Stop	OFF3 Fast Stop	✓	
3	Enable Operation		✓	
4	Enable Ramp Output	=0 to set ramp output to zero		1
5	Enable Ramp	=0 to hold ramp		1
6	Enable Ramp Input	=0 to set ramp input to zero		1
7	Reset Fault	Reset on 0 to 1 transition	✓	
8				0
9				0
10	Remote	=1 to control remotely		1
11				0
12				0
13				0
14				0
15				0

Switch On

Replaces the RUN FWD, RUN REV and NOT STOP parameters of the SEQUENCING LOGIC function block. When Set (=1) is the same as :

RUN FWD	=	TRUE
RUN REV	=	FALSE
NOT STOP	=	FALSE

When Cleared (= 0) is the same as :

RUN FWD	=	FALSE
RUN REV	=	FALSE
NOT STOP	=	FALSE

(Not) Disable Voltage

ANDed with the NOT COAST STOP parameter of the SEQUENCING LOGIC function block.
When both Set (=1) is the same as:

NOT COAST STOP = TRUE

When either or both Cleared (= 0) is the same as :

NOT COAST STOP = FALSE

(Not) Quick Stop

ANDed with the NOT FAST STOP parameter on the SEQUENCING LOGIC function block.
When both Set (=1) is the same as:

NOT FAST STOP = TRUE

When either or both Cleared (= 0) is the same as :

NOT FAST STOP = FALSE

Enable Operation

ANDed with the DRIVE ENABLE parameter on the SEQUENCING LOGIC function block.
When both Set (=1) is the same as:

DRIVE ENABLE = TRUE

When either or both Cleared (= 0) is the same as :

DRIVE ENABLE = FALSE

Enable Ramp Output, Enable Ramp, Enable Ramp Input

Not implemented. The state of these bits must be set (=1) to allow this feature to be added in the future.

Reset Fault

Replaces the REM TRIP RESET parameter on the SEQUENCING LOCIC function block. When Set (=1) is the same as:

REM TRIP RESET = TRUE

When Cleared (= 0) is the same as :

REM TRIP RESET = FALSE

Remote

Not implemented. It is intended to allow the PLC to toggle between local and remote. The state of this must be set (=1) to allow this feature to be added in the future.

Example Commands

047F hexadecimal to RUN

047E hexadecimal to STOP

Communications Status

The COMMS STATUS parameter (PREF 95.08) in the COMMS CONTROL function block monitors the sequencing of the Drive. It is a 16-bit word based on standard fieldbus drive profiles. Some bits are not implemented in the initial release and are set to 0 (see “Supported” column of the table below).

Bit	Name	Description	Supported
0	Ready To Switch On		✓
1	Switched On	Ready for operation (refer control bit 0)	✓
2	Operation Enabled	(refer control bit 3)	✓
3	Fault	Tripped	✓
4	(Not) Voltage Disabled	OFF 2 Command pending	✓
5	(Not) Quick Stop	OFF 3 Command pending	✓
6	Switch On Disable	Switch On Inhibited	✓
7	Warning		
8	SP / PV in Range		
9	Remote	= 1 if Drive will accept Command Word	✓
10	Setpoint Reached	= 1 if not ramping	✓
11	Internal Limit Active	= 1 if current limit active or speed loop is in torque limit	✓
12			
13			
14			
15			

Ready To Switch On

Same as the SWITCH ON ENABLE output parameter of the SEQUENCING LOGIC function block.

Switched On

Same as the SWITCHED ON output parameter of the SEQUENCING LOGIC function block.

Operation Enabled

Same as the RUNNING output parameter of the SEQUENCING LOGIC function block.

Fault

Same as the TRIPPED output parameter of the SEQUENCING LOGIC function block.

(Not) Voltage Disabled

If in Remote Comms mode, this is the same as Bit 1 of the COMMS COMMAND parameter. Otherwise it is the same as the NOT COAST STOP input parameter of the SEQUENCING LOGIC function block.

(Not) Quick Stop

If in Remote Comms mode, this is the same as Bit 2 of the COMMS COMMAND parameter. Otherwise it is the same as the NOT FAST STOP input parameter of the SEQUENCING LOGIC function block.

Switch On Disable

Set (=1) only when in START DISABLED state, refer to Table B-1.

Remote

This bit is set (= 1) if the Drive is in Remote mode **AND** the parameter REMOTE COMMS SEL of the COMMS CONTROL function block is Set (= 1).

Setpoint Reached

This bit is set (=1) if the Reference Ramp is not ramping.

Internal Limit Active

This bit is set (=1) if, while in vector control mode, the speed limit has reached the torque limit; or, while in Volts/Hz mode, the open loop current limit is active.

Appendix C
Certification

This Chapter outlines the additional steps that may be required to achieve EMC conformance.

- What is the EMC Directive?
  Who is Responsible?
- Current Standards
- Definition of Working Environments
- EMC Considerations
- European Directives and the CE Mark
- Certificates

What is the EMC Directive? (2004/108/EC)

The EMC[1] Directive is one of a series of directives created to allow manufacturers to trade freely within the EEC territory. This is done by creating the CE mark CE, a "trade symbol" showing that requirements for safety and health are met. These requirements (called "essential requirements") are those apparatus has to meet to obtain the "presumption of conformity".

The aim of the EMC Directive 2004/108/EC is to ensure that any electric, or electronic, device will create no more then a limited amount of RF interference so that other apparatus are not affected from functioning correctly. Also to ensure that an electric, or electronic, device will withstand a certain amount of Electro Magnetic interference from other equipment.

History

Historically each European drives manufacture and importer interpreted the EMC directive and ‘CE’ marking requirements differently.

To provide a unified approach the European machines and drives manufactures, via their national trade associations have formed the ‘European Committee of Manufacturers of Electrical Machines and Power Electronics’, termed CEMEP. Recommendations were produced by this committee for the application of the European Council Directives to power drive systems. These are to be followed by all major European Drives manufacturers.

The “EMC Drive Product Specific Standard” EN 61800-3 was listed in the Official Journal of Europe on January 1st 1997. This standard takes precedence over the Generics Standards. Working to the product standard is a sensible approach to take to show EMC conformance. However many of our customers are tied to the Generic standards for the final application of our drives; we therefore continue to design, test and certify our drives to these standards.

[1] EMC stands for Electro Magnetic Compatibility, a term for the behaviour of an apparatus in terms of the Electro magnetic interference it generates and the immunity to an Electro magnetic field on its enclosure and cables

Who is Responsible?

Within a system the drive is considered to be a component. It remains the responsibility of the system manufacturer to verify that the goals as defined in the EMC directive (essential requirements) are being met. In practice this means that compliance to harmonised standards is sufficient to show compliance with the directive

All Parker SSD Drives' products are tested to ensure compliance with the harmonised standards. However it must be remembered that there is no guarantee that combinations of compliant components will result in a compliant system. This means that compliance to harmonised standards will have to be demonstrated for the system as a whole to ensure compliance with the directive

n *Relevant Apparatus* - Parker SSD Drives Responsibility

Occasionally, say in a case where an existing fixed speed motor - such as a fan or pump - is converted to variable speed with an add-on drive module *(relevant apparatus*), it becomes the responsibility of Parker SSD Drives to apply the CE mark and issue an EC Declaration of Conformity for the EMC Directive. This declaration and the CE mark is included at the end of this chapter.

n *Component* - Customer Responsibility

The majority of Parker SSD Drives' products are classed as *components* and therefore we cannot apply the CE mark or produce an EC Declaration of Conformity in respect of EMC. It is therefore the manufacturer/supplier/installer of the higher system/apparatus or machine who must conform to the EMC directive and CE mark.

Note ***When two or more EMC compliant components are combined to form the final machine/system, the resulting machine/system may no longer be compliant, (emissions tend to be additive, immunity is determined by the least immune component). Understand the EMC environment and applicable standards to keep additional compliance costs to a minimum.***

Definition of Working Environments

There are subtle differences in the environments defined in the standards. However, where there is any doubt as to the appropriate classification, we will be glad to advise on a case-by-case basis.

Standard	Environment	
	"Domestic"	**"Industrial"**
Drive Specific	(Immunity) Category C1 (Emission) Environment that includes Domestic premises. It also includes establishments directly connected without intermediate transformers to a low voltage (<1000V-rms) supply network that also supplies buildings used for domestic purposes.	(Immunity) Category C2 (Emission) Environment that includes all establishments other than those directly connected to a low voltage (<1000V-rms) supply network that supplies buildings used for domestic purposes.
Generic standards	The environment encompassed by these standards is residential, commercial and light industrial locations, both indoor and outdoor. The following list, although not comprehensive gives an indication of the locations which are included ♦ Residential properties, e.g. houses, apartments etc.; ♦ Retail outlets, e.g. shops, supermarkets, etc.; ♦ Business premises e.g. offices, banks etc.;	Industrial environments are characterised by the existence of one or more of the following conditions: ♦ Industrial ,scientific and medical (ISM) apparatus is present ♦ Heavy inductive or capacitive loads are frequently switched ♦ Currents and associated magnetic field are high

General Installation EMC Considerations

Earthing Requirements

IMPORTANT **Protective earthing always takes precedence over EMC screening.**

Protective Earth (PE) Connections

Note ***In accordance with installations to EN60204, only one protective earth conductor is permitted at each protective earth terminal contacting point.***

Local wiring regulations tale precedence and may require the protective earth connection of the motor to be connected locally, i.e. not as specified in these instructions. This will not cause shielding problems because of the relatively high RF impedance of the local earth connection.

EMC Earth Connections

For compliance with EMC requirements, we recommend that the “0V/signal ground” be separately earthed. When a number of units are used in a system, these terminals should be connected together at a single, local earthing point.

Control and signal cables for the encoder, all analogue inputs, and communications require screening with the screen connected only at the VSD (Variable Speed Drive) end. However, if high frequency noise is still a problem, earth the screen at the non-VSD end via a 0.1µF capacitor.

Note ***Connect the screen (at the VSD end) to the VSD protective earth point ⏚, and not to the control board terminals.***

Cabling Requirements

Note ***Refer to Appendix E: "Technical Specifications" for additional Wire Sizes.***

Planning Cable Runs

- Use the shortest possible motor cable lengths.
- Use a single length of cable to a star junction point to feed multiple motors.
- Keep electrically noisy and sensitive cables apart.
- Keep electrically noisy and sensitive parallel cable runs to a minimum. Separate parallel cable runs by at least 0.25 metres. For runs longer than 10 metres, separation should be increased proportionally. For example if the parallel runs were 50m, then the separation would be (50/10) x 0.25m = 1.25m.
- Sensitive cables should cross noisy cables at 90°.
- Never run sensitive cables close or parallel to the motor, dc link and braking chopper circuit for any distance.
- Never run supply, dc link or motor cables in the same bundle as the signal/control and feedback cables, even if they are screened.
- Ensure EMC filter input and output cables are separately routed and do not couple across the filter.

Increasing Motor Cable Length

Because cable capacitance and hence conducted emissions increase with motor cable length, conformance to EMC limits is only guaranteed with the specified ac supply filter option up to a maximum cable length as specified in Appendix E: "Technical Specifications".

This maximum cable length can be improved using the specified external input or output filters.

Screened/armoured cable has significant capacitance between the conductors and screen, which increases linearly with cable length (typically 200pF/m but varies with cable type and current rating).

Long cable lengths may have the following undesirable effects:

- Tripping on `overcurrent' as the cable capacitance is charged and discharged at the switching frequency.
- Producing increased conducted emissions that degrade the performance of the EMC filter due to saturation.
- Causing RCDs (Residual Current Devices) to trip due to increased high frequency earth current.
- Producing increased heating inside the EMC ac supply filter from the increased conducted emissions.

These effects can be overcome by adding chokes or output filters at the output of the VSD.

Emissions

All VSDs potentially produce electrical emissions which are radiated into the environment and conducted back into the ac supply. The following information is provided to maximise the Electro Magnetic Compatibility (EMC) of VSDs and systems in their intended operating environment, by minimising their emissions.

The standards are concerned with two types of emission

- **Radiated** Those in the band 30MHZ – 1000MHz which radiate into the environment
- **Conducted** Those in the band 150kHz – 30MHz which are injected into the supply.

Radiated

The standards have common roots (CISPR 11 & CISPR14) so there is some commonality in the test levels applied in different environments.

Relationship between standards

Limits (interpreted for 10m measurement)	Standards		
	Product Specific	Generic	
	EN 61800-3	EN61000-6-3	EN61000-6-4
30 – 230MHZ 30dB(µV/m) 230 - 1000MHz 37dB(µV/m)	Category C1 Table 15 Unrestricted Distribution	Equivalent	N/A
30 – 230MHZ 40dB(µV/m) 230 - 1000MHz 47dB(µV/m)	Category C2 Table 15 Restricted Distribution	N/A	Equivalent
30 – 230MHZ 50dB(µV/m) 230 - 1000MHz 60dB(µV/m)	Category C3 Table 18	These limits have no equivalent within the Generic Standards. They are taken from CISPR 11 group 2 Class A	

Reducing Radiated Emissions

To show compliance with the Adjustable Speed Electrical Power Drive Systems Standard BSEN61800-3, and the Generic Standards BSEN61000-6-3 & BSEN61000-6-4; radiated emission measurements are made between 30MHz and 1GHz in the far field at a distance of 10 to 30 metres. Limits lower than 30MHz or in close proximity are not specified.

Emissions from individual components tend to be additive. To reduce the emissions:

- The equipment must be mounted in a metal cubicle. The unit is installed for Category C1 operation when mounted inside a cubicle giving 10dB attenuation between 30 and 100MHz (typically the attenuation provided by a metal cabinet with no aperture of dimension greater than 0.15m), using the recommended ac supply filter and having met all cabling requirements. The cubicle should be as free of openings as is practical. Vent systems suitable for EMC applications are available from cubicle suppliers and should be used.

Note ***Radiated magnetic and electric fields inside the cubicle will be high and any components fitted inside must be sufficiently immune.***

- All cable entry and exits (power, control, and communication) should use screened cable
- Use of screened/armoured cable between VSD/cubicle and motor containing the motor protective earth (PE) connection is most important. If shielded cable is not available, lay unshielded motor cables in a metal conduit which will act as a shield. The conduit must be continuous with a direct electrical contact to the VSD and motor housing. If links are necessary, use **braid** with a minimum cross sectional area of $10mm^2$.
- Use 360° screen terminations.

- Earth screen at both ends connecting to the motor frame and cubicle.

Note ***Some hazardous area installations may preclude direct earthing at both ends of the screen, in this case earth one end via a 1μF 50Vac capacitor, and the other as normal.***

- Keep unshielded cable as short as possible inside the cubicle.
- Always maintain the integrity of the shield. If the cable is interrupted to insert contactors etc., re-connect the screen using the shortest possible route. Some motor gland boxes and conduit glands are made of plastic, if this is the case, then braid must be connected between the screen and the chassis. In addition at the motor end, ensure that the screen is electrically connected to the motor frame since some terminal boxes are insulated from the frame by gasket/paint
- Keep the length of screen stripped-back as short as possible when making screen connections.

Conducted Emission

The various standards have common roots (CISPR 11 & CISPR14) so there is some commonality in the test levels applied in different standards and environments.

Relationship between standards

Limits			Standards		
Frequency (MHz)	**DB (μV)**		**Product Specific**	**Generic**	
	Quasi Peak	**Average**	**EN 61800-3**	**EN61000-6-3**	**EN61000-6-4**
0.15 - 0.5 0.5 - 5.0 5.0 - 30.0	79 73 73	66 60 60	Category C2 Table 14 Restricted Distribution	N/A	Equivalent
0.15 - 0.5 *decreasing with log of frequency to:* 0.5 - 5.0 5.0 - 30.0	66 56 60	56 46 50	Category C1 Table 14 Unrestricted Distribution	Equivalent	N/A
where I ≤100A 0.15 - 0.5 0.5 - 5.0 5.0 - 30.0 *decreasing with log of frequency to:*	 100 86 90 70	 90 76 80 60	Category C3 Table 17	These limits have no equivalent within the Generic Standards. They are taken from CISPR 11 group 2 Class A	
where I ≥100A 0.15 - 0.5 0.5 - 5.0 5.0 - 30.0	 130 125 115	 120 115 105			

Screening & Earthing

Note ***The installation requirements of local safety standards must be achieved regarding the safety of electrical equipment for machines.. Refer to Chapter 4: Connecting Power.***

The VSD, external filter and associated equipment are mounted onto a conducting, metal mounting panel. Do not use cubicle constructions that use insulating mounting panels or undefined mounting structures. Cables between the VSD and motor must be screened or armoured and terminated at the VSD or locally on the back panel.

Star Point Earthing

A star-point earthing policy separates ‘noisy’ and ‘clean’ earths. Four separate earth busbars (three are insulated from the mounting panel) connect to a single earth point (star point) near the incoming safety earth from the main supply. Flexible, large cross-section cable is used to ensure a low HF impedance. Busbars are arranged so that connection to the single earth point is as short as possible.

1. **Clean Earth Busbar (insulated from the mounting panel)**

   Used as a reference point for all signal and control cabling. This may be further subdivided into an analog and a digital reference busbar, each separately connected to the star earthing point. The digital reference is also used for any 24V control.

2. **Dirty Earth Busbar (insulated from the mounting panel)**

   Used for all power earths, i.e. protective earth connection. It is also used as a reference for any 110 or 220V control used, and for the control transformer screen.

3. **Metal Work Earth Busbar**

   The back panel is used as this earth busbar, and should provide earthing points for all parts of the cubicle including panels and doors. This busbar is also used for power screened cables which terminate near to (10cm) or directly into a VSD - such as motor cables, braking choppers and their resistors, or between VSDs - refer to the appropriate product manual to identify these. Use U-clips to clamp the screened cables to the back panel to ensure optimum HF connection.

4. **Signal/Control Screen Earth Busbar (insulated from the mounting panel)**

   Used for signal/control screened cables which **do not** go directly to the VSD. Place this busbar as close as possible to the point of cable entry. ‘U’ clamp the screened cables to the busbar to ensure an optimum HF connection.

Sensitive Equipment

The proximity of the source and victim circuit has a large effect on radiated coupling. The electromagnetic fields produced by VSDs falls off rapidly with distance from the cabling/cubicle. Remember that the radiated fields from EMC compliant drive systems are measured at least 10m from the equipment, over the band 30-1000MHz. Any equipment placed closer than this will see larger magnitude fields, especially when very close to the drive.

Do not place magnetic/electric field sensitive equipment within 0.25 metres of the following parts of the VSD system:

- *Variable Speed Drive (VSD)*
- *EMC output filters*
- *Input or output chokes/transformers*
- *The cable between VSD and motor (even when screened/armoured)*
- *Connections to external braking chopper and resistor (even when screened/armoured)*
- *AC/DC brushed motors (due to commutation)*
- *DC link connections (even when screened/armoured)*
- *Relays and contactors (even when suppressed)*

From experience, the following equipment is particularly sensitive and requires careful installation:

- *Any transducers which produce low level analogue outputs (<1V) , e.g. load cells, strain gauges, thermocouples, piezoelectric transducers, anemometers, LVDTs*
- *Wide band width control inputs (>100Hz)*
- *AM radios (long and medium wave only)*
- *Video cameras and closed circuit TV*

- *Office personal computers*
- *Capacitive devices such as proximity sensors and level transducers*
- *Mains borne communication systems*
- *Equipment not suitable for operation in the intended EMC environment, i.e. with insufficient immunity to new EMC standards*

Single VSD - Multiple Motors

If connecting multiple motors to a single VSD, use a star junction point for motor cable connections. Use a metal box with entry and exit cable glands to maintain shield integrity.

European Directives and the CE Mark

The following information is supplied to provide a basic understanding of the EMC and low voltage directives CE marking requirements. The following literature is recommended for further information:

- *Recommendations for Application of Power Drive Systems (PDS), European Council Directives - CE Marking and Technical Standardisation* - (CEMEP)

Available from your local trade association or Parker SSD Drives office

The European machines and drives manufacturers via their national trade associations have formed the European Committee of Manufacturers of Electrical Machines and Power Electronics (CEMEP). Parker SSD Drives and other major European drives manufacturers are working to the CEMEP recommendations on CE marking. The CE mark shows that a product complies with the relevant EU directives, in our case the Low Voltage Directive and, in some instances, the EMC Directive.

CE Marking for Low Voltage Directive

When installed in accordance with this manual, the 890 product is CE marked by Parker SSD Drives in accordance with the low voltage directive (S.I. No. 3260 implements this LVD directive into UK law). Refer to page C-16 for the "EC Declaration of Conformity" (low voltage directive).

Legal Requirements for CE Marking

IMPORTANT: Before installation, clearly understand who is responsible for conformance with the EMC directive. Misappropriation of the CE mark is a criminal offence.

It is important that you have now defined who is responsible for conforming to the EMC directive, either:

n Parker SSD Drives Responsibility

You intend to use the unit as *relevant apparatus.*

When the specified EMC filter is correctly fitted to the unit following EMC installation instructions, it complies with the relevant standards indicated in the following tables. The fitting of the filter is mandatory for the CE marking of this unit to apply.

The relevant declarations are to be found at the end of this chapter. The CE mark is displayed on the EC Declaration of Conformity (EMC Directive) provided at the end of this chapter.

n Customer Responsibility

You intend to use the unit as a *component*, therefore you have a choice:

1. To fit the specified filter following EMC installation instructions, which may help you gain EMC compliance for the final machine/system.
2. Not to fit the specified filter, but use a combination of global or local filtering and screening methods, natural migration through distance, or the use of distributed parasitic elements of the existing installation.

Certificates

890 SYSTEM

EC DECLARATIONS OF CONFORMITY

CE

Date CE marked first applied: October 2004

EMC Directive	Low Voltage Directive
In accordance with the EEC Directive 2004/108/EC We Parker SSD Drives, address as below, declare under our sole responsibility that the above Electronic Products when installed and operated with reference to the instructions in the Product Manual (provided with each piece of equipment) is in accordance with the relevant clauses from the following standards:- BSEN61800-3 (2004)	In accordance with the EEC Directive 2006/95/EC We Parker SSD Drives, address as below, declare under our sole responsibility that the above Electronic Products when installed and operated with reference to the instructions in the Product Manual (provided with each piece of equipment), is in accordance with the following standard :- EN50178 (1998)

MANUFACTURERS DECLARATIONS

EMC DECLARATION	MACHINERY DIRECTIVE
We Parker SSD Drives, address as below, declare under our sole responsibility that the above Electronic Products when installed and operated with reference to the instructions in the Product Manual (provided with each piece of equipment) is in accordance with the relevant clauses from the following standards:- BSEN61800-3 (2004)	The above Electronic Products are components to be incorporated into machinery and may not be operated alone. The complete machinery or installation using this equipment may only be put into service when the safety considerations of the Directive 89/392/EEC are fully adhered to. Particular reference should be made to EN60204-1 (Safety of Machinery - Electrical Equipment of Machines). All instructions, warnings and safety information of the Product Manual must be adhered to.

Dr Martin Payn (Conformance Officer)

Parker Hannifin Ltd., Automation Group, SSD Drives Europe, NEW COURTWICK LANE, LITTLEHAMPTON, WEST SUSSEX BN17 7RZ
TELEPHONE: +44 (0) 1903 737000, FAX: +44 (0) 1903 737100
Registered Number 4806503 England. Registered Office: 55 Maylands Avenue, Hemel Hempstead, Herts HP2 4SJ

Appendix D
Programming

This Appendix provides an introduction to programming the 890. It describes the 890 Function Blocks and the parameters they contain. We recommend that you program the 890 using the DSE Configuration Tool.

- Programming with block diagrams
- Modifying a block diagram
- Function block descriptions
- Parameter specification tables
- Product related default values

Programming with Block Diagrams

You can program the drive to your specific application. This programming simply involves changing parameter values. For instance, parameter $^{S}1$ selects the main method of motor control used by the drive: Volts/Hz or Sensorless Vector.

Block diagram programming provides a visual method of planning the software to suit your application. The blocks described here are those blocks used by the Shipping Configuration(s) in the DSE 890 Configuration Tool. A typical block diagram as seen in the DSE 890 Configuration Tool is shown below.

The processes performed by the shipping configuration are represented as a block diagram, consisting of *function blocks* and *links:*

- Each function block contains the parameters required for setting-up a particular processing feature. Sometimes more than one instance of a function block is provided for a feature, i.e. for multiple digital inputs.

- Software links are used to connect the function blocks. Each link transfers the value of an output parameter to an input parameter of another (or the same) function block.

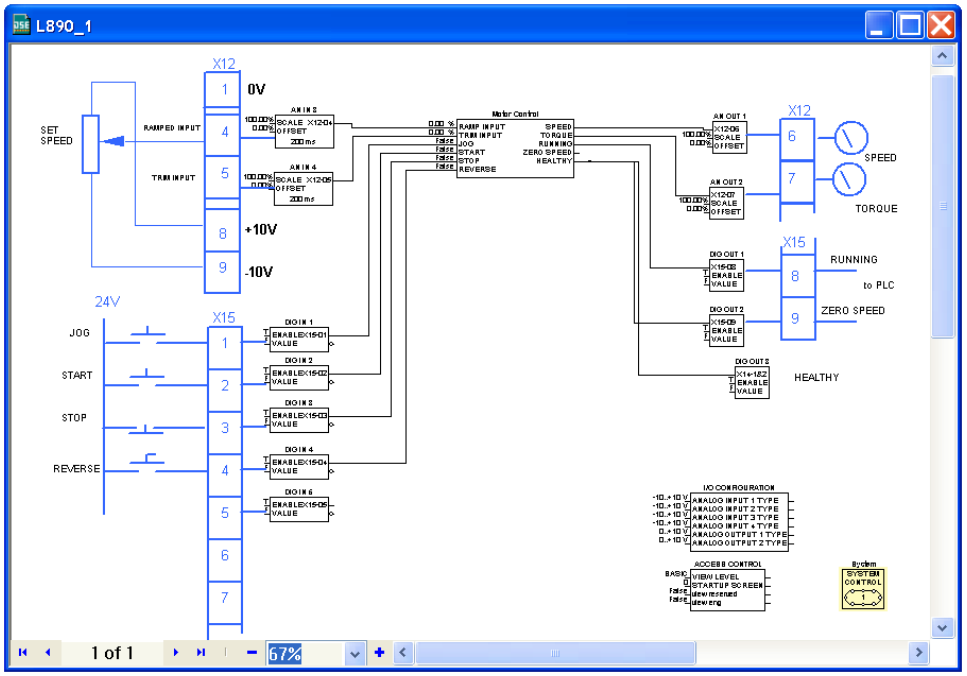

Each individual block is a processing feature, i.e. it takes the input parameter, processes the information, and makes the result available as one or more output parameters.

Modifying a Block Diagram

- Using the keypad you can modify the parameter values within a function block.
- Using the DSE Configuration Tool, you can modify the parameter values within a function block, and also make and break links within the shipping configuration. The Help in the DSE Configuration Tool explains this process.

Programming Rules

The following rules apply when programming:

- Function block output parameter values cannot be changed (because they are a result of the function block's processing)
- Function block input parameter values that receive their values from an internal link in the Block Diagram cannot be changed (as they will change back to the value they receive from the link when the Drive is running).

Saving Your Modifications

If parameter values have been modified, the new settings must be saved. The Drive will then retain the new settings during power-down. Refer to Chapter 8: "The Keypad" - Saving Your Application.

Function Block Descriptions

Note ***To view the SETUP Menu, ADVANCED view level must be selected - SETUP::VIEW LEVEL.***

Understanding the Function Block Description

The following function blocks show the parameter information necessary for programming the Drive.

The Default values in the pages below are correct for when the UK country code is selected and a 230V 2.2kW Frame B power board is fitted. Some parameters in the table are marked:

* Value dependent upon the Language field of the Product Code, e.g. UK

** Value dependent upon the overall “power-build”, e.g. 230V, 2.2kW

The values for these parameters may be different for your drive/application. Refer to Appendix D: "Programming" - Product Related Default Values.

Parameter Descriptions Table: Sub-titles	
PREF	Unique identification normally used for communications
Default	The default value.
Range	The range for the parameter value. Ranges for outputs are given as “—.xx %”, for example, indicating an indeterminate integer for the value, to two decimal places.
*	Parameters marked with “*” are set to a value depending upon the “operating frequency” of the drive. Refer to “Parameter Specification” - Frequency Dependent Defaults; and Chapter 8: “The Keypad” - Changing the Product Code (3-button reset).

Function Blocks Alphabetically

The function block descriptions in this chapter are arranged alphabetically, however, they are also listed below by Category. ADVANCED view level must be selected to see all the function blocks listed

Page	Block	Page	Block	Page	Block
			I/O Hardware Configuration		
8	ANALOG INPUT	23	DIGITAL INPUT		
11	ANALOG OUTPUT	24	DIGITAL OUTPUT		
			Sequencing/Referencing		
12	AUTO RESTART	115	REFERENCE	129	REFERENCE STOP
148	COMMS CONTROL	125	REFERENCE JOG	139	SEQUENCING LOGIC
70	LOCAL CONTROL	126	REFERENCE RAMP		
			Motor Control		
14	AUTOTUNE	66	INVERSE TIME PMAC	134	RESOLVER
20	CURRENT LIMIT	68	INVERSE TIME	131	SKIP FREQUENCIES
29	DYNAMIC BRAKING	72	MOT PMAC PROTECT	148	SLEW RATE LIMIT
36	ENCODER	74	MOT POLARISATION	150	SLIP COMP
41	ENERGY METER	79	MOTOR INDUCTION	153	SPEED LOOP
43	FEEDBACKS	82	MOTOR PMAC 1	161	SPEED LOOP 2
52	FLUXING	88	MOTOR PMAC 2	163	STABILISATION
57	FLYCATCHING	97	PATTERN GEN	187	TORQUE LIMIT
62	INERTIA COMP	110	POSITION LOOP	185	VOLTAGE CONTROL
64	INJ BRAKING	131	REGEN CONTROL	186	ZERO SPEED
			Communications		
22	COMMS PORT	169	FIREWIRE		

			Trips		
21	CUSTOM TRIPS	152	SPEED FBK TRIP	171	TRIPS STATUS
60	I/O TRIPS	164	STALL TRIP		
94	OVER SPEED TRIP	169	TRIPS HISTORY		
			Menus		
7	ACCESS CONTROL	92	OP STATION	142	SETPOINT DISPLAY
29	DISPLAY SCALE	94	OPERATOR MENU		
			Phase Control		
25	DRIVE CONFIG	101	PHASE MOVE	119	REFERNCE ENCODER
49	FIREWIRE REF	104	PHASE MOVE ABS	165	SYNTHETIC ENCODER
90	MOVE TO MASTER	106	PHASE OFFSET	187	VIRTUAL MASTER
99	PHASE INCH	107	PHASE TUNING		
			Drive Setup		
		35	EMC CAPACITORS		
			Miscellaneous		
		25	DRIVE CONFIG		

ACCESS CONTROL

SETUP::MENUS::ACCESS CONTROL

This function block contains options associated with keypad password protection, view levels, setpoint display and initial Operator Menu selection.

Parameter Descriptions

VIEW LEVEL	*PREF: 31.01*	*Default: 1*	*Range: See below*

Sets the level of menu to be displayed by the keypad.

Enumerated Value : *View Level*
0 : OPERATOR
1 : BASIC
2 : ADVANCED

PASSWORD	*PREF: 31.02*	*Default: 0000*	*Range: 0x0000 to 0xFFFF*

Setting a non-zero value enables the password feature.

CONFIG NAME	*PREF: 31.05*	*Default:*	*Range: See below*

The maximum length is 16 characters. When not blank, the string is displayed as the top line of the Welcome screen.

STARTUP SCREEN	*PREF: 31.06*	*Default: 0*	*Range: See below*

Selects which of the Operator Menu parameters will be displayed after the Welcome screen.

Enumerated Value : *Startup Screen*
0 : selects REMOTE SETPOINT or LOCAL SETPOINT
1 : selects parameter defined by OPERATOR MENU 1
2 : selects parameter defined by OPERATOR MENU 2
: etc.
32 : selects parameter defined by OPERATOR MENU 32

ANALOG INPUT

SETUP::INPUTS & OUTPUTS::ANALOG INPUT

The analog input block converts the input voltage or current into a value expressed as a percentage of a configurable range.

Parameter Descriptions

TYPE *PREF: 1.03, 2.03, 3.03, 4.03* *Default: -10..+10V* *Range: See below*

The input range and type.

- ANALOG INPUT 1 and ANALOG INPUT 2 are used for voltage measurement only.
- ANALOG INPUT 3 and ANALOG INPUT 4 support all types.
- ANALOG INPUT 5 is the differential of ANIN1 and ANIN2, see the Functional Description.
- ANALOG INPUT 6 is -10.. +10 V. and its type is not user selectable.

Enumerated Value : Type

0 : -10..+10 V
1 : 0..+10 V
2 : 0..20 mA
3 : 4..20 mA

BREAK ENABLE *PREF: 3.04, 4.04* *Default: FALSE* *Range: FALSE / TRUE*

Only available on ANIN3 and ANIN4. For input types that support sensor break detection (see Functional Description below), this parameter may be used to disable sensor break detection. For input types that do not support break detection, this parameter is FALSE.

BREAK VALUE	*PREF: 3.05, 4.05*	*Default: -100.00 %*	*Range: -300.00 to 300.00 %*

Only available on ANIN3 and ANIN4. The value that will appear as the VALUE output when BREAK is TRUE.

VALUE	*PREF: 1.06, 2.06, 3.06, 4.06, 5.06, 179.06*	*Default: —.xx %*	*Range: —.xx %*

The input reading. (PREF 5.06 is ANIN5, see the Functional Description).

FITTED	*PREF: 179.08*	*Default:*	*Range: FALSE / TRUE*

Only available on ANIN6. This diagnostic indicates if the 8903/AI option board is fitted on the drive. Diagnostic is FALSE if the board is not fitted, otherwise it is TRUE.
When FITTED = FALSE, the ANIN6 VALUE is reset to 0.0000 %.

Functional Description

The Drive has four analog inputs. There is an analog input function block for each:

AIN1 is associated with the signal on terminal X12/02
AIN2 is associated with the signal on terminal X12/03
AIN3 is associated with the signal on terminal X12/04
AIN4 is associated with the signal on terminal X12/05

Analog input 5 is a special case: terminals AIN1 and AIN2 can be used as a differential ±10V input (which we call AIN5).

Analog input 6 is also a special case. It is a high resolution differential analog input (15-bit + sign) located on the 8903/AI option board. The input type is -10. +10 V.

All analog inputs can be configured as a direct input into the Speed Loop providing a fast speed or torque demand for servos.

The input voltage is pre-processed and converted into a numeric value by the analog input electronics of the Drive. The analog input function blocks further process this reading so that a value of 0.00% represents an input equal to the low input range, while a value of 100.00% represents an input equal to the high input range.

The break detect facility may only be used in conjunction with the 4..20mA hardware range. An input break is defined as an input reading less than 0.45mA. When an input break has been detected, the VALUE output is forced to be the BREAK VALUE .

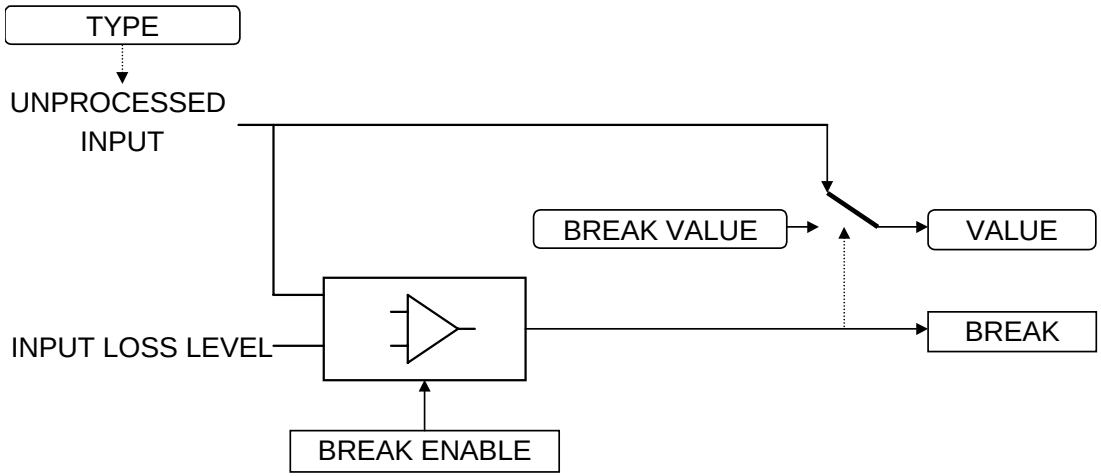
TYPE
UNPROCESSED INPUT
BREAK VALUE
VALUE
INPUT LOSS LEVEL
BREAK
BREAK ENABLE

ANALOG OUTPUT

SETUP::INPUTS & OUTPUTS::ANALOG OUTPUT

The analog output blocks converts the demand percentage into a form suitable for driving the analog output electronics of the Drive.

Parameter Descriptions

VALUE *PREF: 6.01, 7.01,* *Default: —.xx %* *Range: -300.00 to 300.00 %*

The demanded value to output.

TYPE *PREF: 6.05, 7.05* *Default:0..+10V* *Range: See below*

The output hardware Voltage type. An incorrect selection will force the VALUE to be set to zero.

Enumerated Value : *Type*

0 : -10..+10 V
1 : 0..10 V

Functional Description

The Drive has two analog outputs. There is an ANALOG OUTPUT function block associated with each of these:

AOUT1 is associated with terminal X12/06
AOUT2 is associated with terminal X12/07

AUTO RESTART

SETUP::SEQ & REF::AUTO RESTART

Auto Restart provides the facility to automatically reset a choice of trip events and restart the Drive with a programmed number of attempts, after which, a manual or remote trip reset is required if the Drive is not successfully restarted. The number of attempted restarts are recorded. This count is cleared after a trip-free period of operation (5 minutes or 4 x ATTEMPT DELAY 1, whichever is the longer), or after a successful manual or remote trip reset, or by removing the Run signal, or by setting the ENABLE input to this block FALSE.

Parameter Descriptions

ENABLE	*PREF:* 93.01	*Default: FALSE*	*Range: FALSE / TRUE*

Enables operation of the auto restart feature. TRUE = enabled.

ATTEMPTS	*PREF: 93.02*	*Default: 5*	*Range: 1 to 10*

Determines the number of restarts that will be permitted before requiring an external fault reset.

INITIAL DELAY 1	*PREF: 93.03*	*Default: —.x s*	*Range: 0.0 to 600.0 s*

Determines the delay for the first restart attempt when the trip is included in TRIGGER 1 WORD 1.
The delay is measured from all error conditions clearing.

ATTEMPT DELAY 1	*PREF: 93.04*	*Default: —.x s*	*Range: 0.0 to 600.0 s*

Determines the delay between restart attempts for a trip included in TRIGGER 1 WORD 1. The delay is measured from all error conditions clearing.

TRIGGER 1 WORD 1 to TRIGGER 1 WORD 6	*PREF:93.05, 93.06, 93.15, 93.16, 93.19, 93.20*	*Default: 0000*	*Range: 0x0000 to 0xFFFF*

Allows Auto Restart to be enabled for a selection of trip conditions. Refer to TRIPS STATUS, page D-171, for an explanation of the four-digit codes.

Parameter Descriptions

INITIAL DELAY 2	*PREF: 93.07*	*Default: —.x s*	*Range: 0.0 to 600.0 s*

Determines the delay for the first restart attempt when the trip is included in TRIGGER 2.
The delay is measured from all error conditions clearing.

ATTEMPT DELAY 2	*PREF: 93.08*	*Default: —.x s*	*Range: 0.0 to 600.0 s*

Determines the delay between restart attempts for a trip included in TRIGGER 2. The delay is measured from all error conditions clearing.

TRIGGER 2 WORD 1 to TRIGGER 2 WORD 6	*PREF: 93.09, 93.10, 93.17, 93.18, 93.21, 93.22*	*Default: 0000*	*Range:0x0000 to 0xFFFF*

Allows Auto Restart to be enabled for a selection of trip conditions.

If a trip is included in both TRIGGER 1 WORD 1 and TRIGGER 2 WORD 1 for instance, then the times associated with TRIGGER 1 WORD 1 will take priority.

Refer to page D-180: “Hexadecimal Representation of Trips” for an explanation of the four-digit codes.

PENDING	*PREF: 93.11*	*Default: FALSE*	*Range: FALSE / TRUE*

Indicates that an auto restart will occur after the programmed delay.

RESTARTING	*PREF: 93.12*	*Default: FALSE*	*Range: FALSE / TRUE*

Indicates that an auto restart is occurring. TRUE for a single block diagram execution cycle.

ATTEMPTS LEFT	*PREF: 93.13*	*Default: 5*	*Range: —.*

Indicates the number of attempts left before an external fault reset is required.

TIME LEFT	*PREF: 93.14*	*Default: —.x s*	*Range: —.x s*

When in the Restarting state, this parameter indicates the time left before an auto restart attempt will be permitted. When non-zero, this value is unaffected by changes to ATTEMPT DELAY 1.

AUTOTUNE

SETUP::MOTOR CONTROL::AUTOTUNE

Designed for SENSORLESS VEC and CLOSED-LOOP VEC Motor Control Modes.

The autotune is an automatic test sequence performed by the Drive to identify motor model parameters. The motor model is used by the Sensorless Vector and Closed-Loop Vector control modes. You **MUST** perform an autotune before operating the Drive in either of the Vector control modes.

Refer to the Chapter 4/5: The Autotune Feature.

Parameter Descriptions

ENABLE *PREF: 80.01* *Default: FALSE* *Range: FALSE / TRUE*

Determines whether the Autotune sequence is operational or not. The Autotune sequence is operational when set to TRUE and the Drive is run. Refer to Chapter 4/5: The Autotune Feature.

MODE *PREF: 80.02* *Default: ROTATING* *Range: See below*

Selects the Autotune operating mode. Refer to Chapter 4/5: - The Autotune Feature.

Enumerated Value :	*Mode*	
	0 : STATIONARY	determine motor parameters
	1 : ROTATING	determine motor parameters
	2 : SPD LOOP ROTATING	determine speed loop tuning dependent on motor inertia
	3 : SPD LOOP STATIONARY	determine speed loop tuning dependent on motor inertia

Parameter Descriptions

TEST DISABLE *PREF: 80.03* *Default:* *Range: 0 to 4*

This parameter expands on the MMI to show five tests. Each test can be individually disabled by setting to TRUE.

Enumerated Value : *Test*

0 : STATOR RES
1 : LEAKAGE IND
2 : ENCODER DIR
3 : MAG CURRENT
4 : ROTOR TIME CONST

SPD LOOP BNDWDTH *PREF: 80.20* *Default: 2.0 Hz* *Range: 0.0 to 500.0 Hz*

Sets the target bandwidth for the speed loop autotune. After the speed loop autotune, this will display the actual bandwidth corresponding to the speed loop gains.

SPD MAX TORQUE *PREF: 80.23* *Default: 50.0 %* *Range: 0.0 to 500.0 %*

Sets the maximum torque that will be used in the speed loop autotune test.

SPD MAX SPEED *PREF: 80.24* *Default: 50.0 %* *Range: 15.0 to 100.0 %*

Sets the maximum speed that will be used in the speed loop autotune test

ACTIVE *PREF: 80.09* *Default:* *Range: FALSE / TRUE*

This indicates the current state of the Autotune sequence. The Autotune sequence is operational when displaying TRUE.

Functional Description

IMPORTANT **You MUST carry out an Autotune if you intend to use the drive in either of the two vector control modes. If you are using it in Volts/Hz control an Autotune is not necessary.**

Autotune can only be initiated from the “stopped” condition. When the test is complete, the stack is disabled and ENABLE is set to FALSE.

Note ***Refer to the Chapter 4/5: The Autotune Feature for details on how to perform an Autotune.***

Standard Autotune (MODE = 0 or 1)

The Standard Autotune feature identifies and loads values into the parameters below. These are in the MOTOR INDUCTION function block and also accessible via the QUICK SETUP menu (ENCODER INVERT is in the ENCODER function block). Autotune will overwrite any previous entry made for these parameters.

Parameter	Description	Note
ENCODER INVERT	Encoder direction	Parameter is only set up if drive is configured to run as Closed-loop Vector Not measured by Stationary Autotune
MAG CURRENT	Magnetising current	Not measured by Stationary Autotune
STATOR RES	Per phase stator resistance	
LEAKAGE INDUC	Per phase stator leakage inductance	
MUTUAL INDUC	Per phase mutual inductance	
ROTOR TIME CONST	Rotor time constant	This is identified from magnetising current and motor nameplate rpm

- The Stationary autotune sequence does not rotate the motor and requires the correct value of MAG CURRENT to be entered.
- The Rotating autotune sequence rotates the motor up to the user-programmed MAX SPEED (SETPOINT SCALE function block) in order to identify these parameters.

Speed Loop Autotune (MODE = 2 or 3)

For these additional tests, the motor is connected to the load.

- The Stationary autotune will calculate the speed loop gains without rotating the motor. You must know the total inertia of the system and enter it into the TOTAL INERTIA parameter in the MOTOR INDUCTION function block.
- The Rotating autotune applies a sequence of torque steps to the motor and load to determine the total inertia of the system. This value is entered into the TOTAL INERTIA parameter in the MOTOR INDUCTION function block.

  The maximum speed and torque that can be reached during this test is set by the SPD MAX SPEED and SPD MAX TORQUE parameters.

  The value of total inertia, together with SPD LOOP BNDWDTH, is then used to calculate values for the SPEED PROP GAIN and SPEED INT TIME parameters in the SPEED LOOP function block. The model used to calculate this is a simple 2nd order closed-loop system with critical damping.

The maximum value of SPEED PROP GAIN is limited to a value of 20.00 in Sensorless Vector mode. In Closed-Loop Vector mode, it is limited such that the torque ripple due to encoder quantisations is less than 10%. If either of these limits is reached, then the SPD LOOP BNDWDTH parameter is re-calculated. After the test, this parameter will display the bandwidth achieved.

COMMS CONTROL

SETUP::SEQ & REF::COMMS CONTROL

This block switches between Remote Terminal and Remote Comms operating modes.

The Drive must be in Remote mode for selection to be made - REMOTE mode is enabled in the LOCAL CONTROL function block (REF MODES) and selected by the keypad. Refer to the outputs of the LOCAL CONTROL function block for the mode in use.

Parameter Descriptions

REMOTE COMMS SEL *PREF: 95.01* *Default: FALSE* *Range: FALSE / TRUE*

Selects the type of remote communications mode:

0 : FALSE, and in REMOTE mode then control is from the terminals.
1 : TRUE, and in REMOTE mode then control is from the communications.

FIREWIRE REF SEL *PREF: 95.10* *Default: FALSE* *Range:* FALSE / TRUE

This parameter selects Firewire Ref as the active reference.

REMOTE SEQ MODES *PREF: 95.02* *Default: 0* *Range: Enumerated - see below*

Selects the type of remote sequencing mode:

Enumerated Value : *Mode*

0 : TERMINALS/COMMS
1 : TERMINALS ONLY
2 : COMMS ONLY

REMOTE REF MODES *PREF: 95.03* *Default:0* *Range: See below*

Selects the type of remote reference mode:

Enumerated Value : *Mode*

0 : TERMINALS/COMMS
1 : TERMINALS ONLY
2 : COMMS ONLY

Parameter Descriptions

COMMS COMMAND *PREF: 95.09* *Default: 0000* *Range:* 0x0000 to 0xFFFF

16-bit Command. Refer to Appendix B: “Sequencing Logic”.

COMMS SEQ *PREF: 95.06* *Default: FALSE* *Range: FALSE / TRUE*

Diagnostic indicating if operating in Remote Sequencing Comms Mode.
If FALSE (0), the Drive may be in Local Sequencing mode or Remote Sequencing Terminal mode.

COMMS REF *PREF: 95.07* *Default: FALSE* *Range: FALSE / TRUE*

Diagnostic indicating if operating in Remote Reference Comms Mode.
If FALSE (0), the Drive may be in Local Reference mode or Remote Reference Terminal mode.

FIREWIRE REF *PREF: 95.11* *Default: FALSE* *Range:* TRUE / FALSE

This diagnostic indicates if Firewire Ref is the active reference.

COMMS STATUS *PREF: 95.08* *Default: 0000* *Range:* 0x0000 to 0xFFFF

Diagnostic showing the 16-bit Status word as seen by the communications.
Refer to Appendix B: “Sequencing Logic”.

CURRENT LIMIT

SETUP::MOTOR CONTROL::CURRENT LIMIT

Designed for all Motor Control Modes, except PMAC control mode.

This function block allows you to set the maximum level of motor rated current (as a % of the user-set MOTOR CURRENT) which is allowed to flow before current limit action occurs. If the measured motor current exceeds the current limit value with a motoring load, the motor speed is reduced to shed the excess load. If the measured motor current exceeds the current limit value with a regenerating load, the motor speed is increased up to a maximum of MAX SPEED (REFERENCE function block).

Note ***The maximum value of current limit for a particular motor is limited by the 890 current rating. If a motor of larger rating than the 890+ is connected, then the current limit applies to the 890 and not the motor. In this case, the maximum value of the CURRENT LIMIT parameter is 150.00%.***

Parameter Descriptions

CURRENT LIMIT *PREF: 82.01* *Default: 150.00 %* *Range: 0.00 to 300.00 %*

This parameter sets the level of motor current, as a % of MOTOR CURRENT (refer to the MOTOR INDUCTION function block) at which the Drive begins to take current limit action.

REGEN LIM ENABLE *PREF: 82.02* *Default: TRUE* *Range: FALSE / TRUE*

This parameter enables or disables regenerative current limit action.

Note that this parameter only works in open-loop VOLTS / Hz motor control mode.

CUSTOM TRIPS

SETUP::TRIPS::CUSTOM TRIPS

This function block may be used to generate a trip or an alarm. The text for the trip message on the MMI may be customised.

Parameter Descriptions

CUSTOM ALARM 1 - 7 *PREF: 165.01 to 165.07* *Default: FALSE* *Range: FALSE / TRUE*

When TRUE, this causes an alarm message to appear on the display/keypad. This message may be cleared from the display by pressing the E key. An alarm does not cause the drive to stop. The corresponding bit in the TRIPS STATUS::WARNINGS WORD 5 parameter will match this input.

CUSTOM TRIP 1 - 7 *PREF: 165.08 to 165.14* *Default: FALSE* *Range: FALSE / TRUE*

When TRUE this causes the drive to trip, which causes the drive to stop. The corresponding bit in the TRIPS STATUS::ACTIVE WORD 5 parameter will remain TRUE until the trip is reset. Refer to the "Trips and Fault Finding" chapter.

CUSTOM NAME 1 - 7 *PREF: 165.15 to 165.21* *Default: CUSTOM TRIP* *Range: max length 16 chars*

Text entered here will be shown on the 6901 display/keypad when the corresponding alarm or trip becomes active. If no text is entered then the default trip text will be shown. Refer to the CUSTOM TRIPS 1-7 shown in the "Trips and Fault Finding" chapter.

COMMS PORT

SETUP:: SEQ & REF::COMMS PORT

Designed for all Motor Control Modes.

This function block allows you to set the mode for the P3 Comms Port (keypad port).

Parameter Descriptions

MODE *PREF: 129.01* *Default: AUTOMATIC* *Range: Enumerated - see below*

This parameter

Enumerated Value : *Mode*

0 : AUTOMATIC (senses if either 6511 or 6901 operator station is present)
1 : 6511 OP STATION
2 : 6901 OP STATION
3 : TS8000 HMI

DIGITAL INPUT

SETUP::INPUTS & OUTPUTS::DIGITAL INPUT

The digital input block converts the physical input voltage to TRUE or FALSE control signals.

Parameter Descriptions

VALUE	*PREF: 8.02, 9.02, 10.02, 11.02, 12.02, 13.02, 14.02, 15.02, 16.02*	*Default: FALSE* *Range: FALSE / TRUE*

The TRUE or FALSE input.

Functional Description

There is a DIGITAL INPUT function block associated with each of the following terminals:

The Control Board has nine configurable digital inputs:

DIN1 is associated with terminal X15/01
DIN2 is associated with terminal X15/02
DIN3 is associated with terminal X15/03
DIN4 is associated with terminal X15/04
DIN5 is associated with terminal X15/05
DIN6 is associated with terminal X15/06
DIN7 is associated with terminal X15/07
DIN8 is associated with terminal X15/08
DIN9 is associated with terminal X15/09

Terminals X1508 and X15/09 act as inputs by default. These terminals can also be set as outputs. Refer to DIGITAL OUTPUT, page D-24.

DIGITAL OUTPUT

SETUP::INPUTS & OUTPUTS::DIGITAL OUTPUT

The digital output block converts a logic TRUE or FALSE demand to a physical output signal.

Parameter Descriptions

VALUE *PREF: 17.01, 18.01, 19.01* *Default: FALSE* *Range: FALSE / TRUE*

The TRUE or FALSE output demand.

Functional Description

There is a DIGITAL OUTPUT function block associated with each of the following terminals:

The Control Board has 2 configurable digital inputs/outputs. These share terminals X15/08 and X15/09. Also refer to CUSTOM TRIPS, page D-21.

DOUT1 is associated with terminal X15/08
DOUT2 is associated with terminal X15/09

The default status for these 2 DOUTs is to act as inputs. Setting VALUE to TRUE will individually configure the block to be an output.

The Control Board has one digital output (volt-free relay contacts):

DIGITAL OUTPUT 3 is associated with the "HEALTH" outputs, DOUT3A & DOUT3B. These are terminals X14/01 and X14/02 respectively.

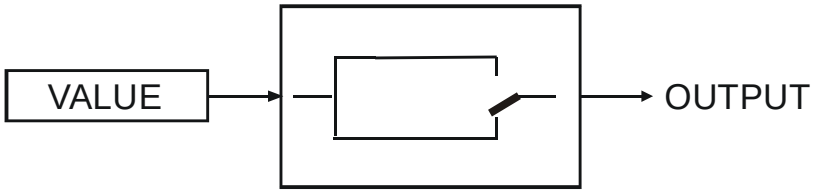

DRIVE CONFIG

SETUP::DRIVE SETUP::DRIVE CONFIG

This block contains general drive set-up parameters and also determines what hardware can be plugged in the A, B and F slots. These parameters must be set correctly in order for the drive to run correctly.

Parameter Descriptions

DRIVE NAME *PREF: 136.01* *Default: 890 DRIVE* *Range:*

Enter a user name for the drive.

CONTROL MODE *PREF: 136.02* *Default: 0* *Range: See below*

This parameter defines how the drive will control the motor. If PMAC control is required, the motor wizard feature in the 890 DSE Configuration Tool **MUST** be used to correctly set-up the motor and feedback device parameters. Failure to do so may result in damage to the servo motor.

Enumerated Value : *CONTROL MODE*

0 : VOLTS / Hz
1 : SENSORLESS VEC
2 : CLOSED-LOOP VEC
3 : 4-Q REGEN
4 : PMAC Used to control Permanent-Magnet AC brushless motors.

SUPPLY VOLTAGE *PREF: 136.19* *Default: 380V to 460V* *Range*: *See below*

Changes the dynamic braking threshold on expected supply voltage range.

Enumerated Value : Supply Voltage

0 : 230V
1 : 380V to 480V
2 : 500V
3 : 575V
4 : 690V

Parameter Descriptions

FBK FITTED *PREF: 136.06* *Default: 0* *Range: See below*

This diagnostic indicates which kind of feedback board is currently fitted in slot F.

Enumerated Value : *FBK FITTED*

0 : NONE
1 : 8903/RE 8902/RR
2 : 8902/EQ
3 : RS485 INC. ENC.
4 : 8902/E1
5 : 8902/LS
6 : UNKNOWN
7 : 8902/M1
8 : 8902/EP
9 : VMASTER SIM.
10:HTTL ENC. REG.
11:RS485 ENC. REG.

Parameter Descriptions

SLOT A FITTED *PREF: 136.09* *Default: 0* *Range: See below*

This diagnostic indicates which kind of option board is currently fitted in slot A.

Enumerated Value : *SLOT A FITTED*

0 : NONE	11 : ANYBUS CC
1 : 8903/FA	12 : 8903/SP
2 : 8903/PB	13 : 8903/IM
3 : 8903/CN	14 : 8903/PN
4 : 8903/CB	15 : 8903/IP
5 : UNKNOWN	16 : 8903/CT
6 : 8903/EQ	17 : 8903/M1
7 : RS485 INC. ENC.	18 : 8903/EP
8 : 8903/E1	19 : 8903/RS
9 : 8903/DN	20 : 8903/FB
10 : 8903/AI	

Parameter Descriptions

SLOT2 FITTED *PREF: 136.12* *Default: 0* *Range: See below*

This diagnostic defines what kind of option board is currently fitted in slot B.

Enumerated Value : *SLOT B FITTED*

0 : NONE	11 : ANYBUS CC
1 : 8903/FA	12 : 8903/SP
2 : 8903/PB	13 : 8903/IM
3 : 8903/CN	14 : 8903/PN
4 : 8903/CB	15 : 8903/IP
5 : UNKNOWN	16 : 8903/CT
6 : 8903/EQ	17 : 8903/M1
7 : RS485 INC. ENC.	18 : 8903/EP
8 : 8903/E1	19 : 8903/RS
9 : 8903/DN	20 : 8903/FB
10 : 8903/AI	

DISPLAY SCALE

SETUP::MENUS::DISPLAY SCALE

These function blocks, 1 to 4, can be used to display any floating point parameter with an applied scaling factor, formulae and your preferred units.

PREF 65.xx is DISPLAY SCALE 1, PREF 66.xx is DISPLAY SCALE 2, etc.

Parameter Descriptions

DECIMAL PLACE *PREF: 65.01, 66.01, 67.01, 68.01* *Default: 0* *Range: Enumerated - see below*

Select the position of the decimal point.

Enumerated Value : Position

0 : DEFAULT
1 : X.XXXX
2 : X.XXX
3 : X.XX
4 : X.X
5 : X.

FORMULA *PREF: 65.02, 66.02, 67.02, 68.02* *Default: 0* *Range: Enumerated - see below*

Select a formula where A, B and C are the coefficients listed below, and X is the value to modify.

Enumerated Value : Formula

0 : A/B * X + C
1 : A/B * (X+C)
2 : A/(B * X) + C
3 : A/(B * (X+C))

Parameter Descriptions

COEFFICIENT A	*PREF: 65.03, 66.03, 67.03, 68.03*	*Default: 1.00*	*Range: -300.00 to 300.00*

Coefficient used as defined by the formula.

COEFFICIENT B	*PREF: 65.04, 66.04, 67.04, 68.04*	*Default: 1.00*	*Range: -300.00 to 300.00*

Coefficient used as defined by the formula.

COEFFICIENT C	*PREF: 65.05, 66.05, 67.05, 68.05*	*Default: 0.00*	*Range: -300.00 to 300.00*

Coefficient used as defined by the formula.

HIGH LIMIT	*PREF: 65.06, 66.06, 67.06, 68.06*	*Default: 0.00*	*Range: -300.00 to 300.00*

Use high limit to set a maximum value for the modified parameter on the keypad. Setting the HIGH LIMIT lower than or equal to the LOW LIMIT makes the parameter “read-only”.

LOW LIMIT	*PREF: 65.07, 66.07, 67.07, 68.07*	*Default: 0.00*	*Range: -300.00 to 300.00*

Use low limit to set a minimum value for the modified parameter on the keypad. Setting the HIGH LIMIT higher than or equal to the HIGH LIMIT makes the parameter “read-only”.

UNITS	*PREF: 65.08, 66.08, 67.08, 68.08*	*Default:*	*Range: max length is 6 chars*

A 6 character label that is displayed as the parameter units.

Functional Description

The DISPLAY SCALE blocks are selected in the ACCESS CONTROL and OPERATOR MENU function blocks for use with the Speed Setpoint and Operator Menu respectively.

For display purposes, the parameter is modified according to the formula chosen:

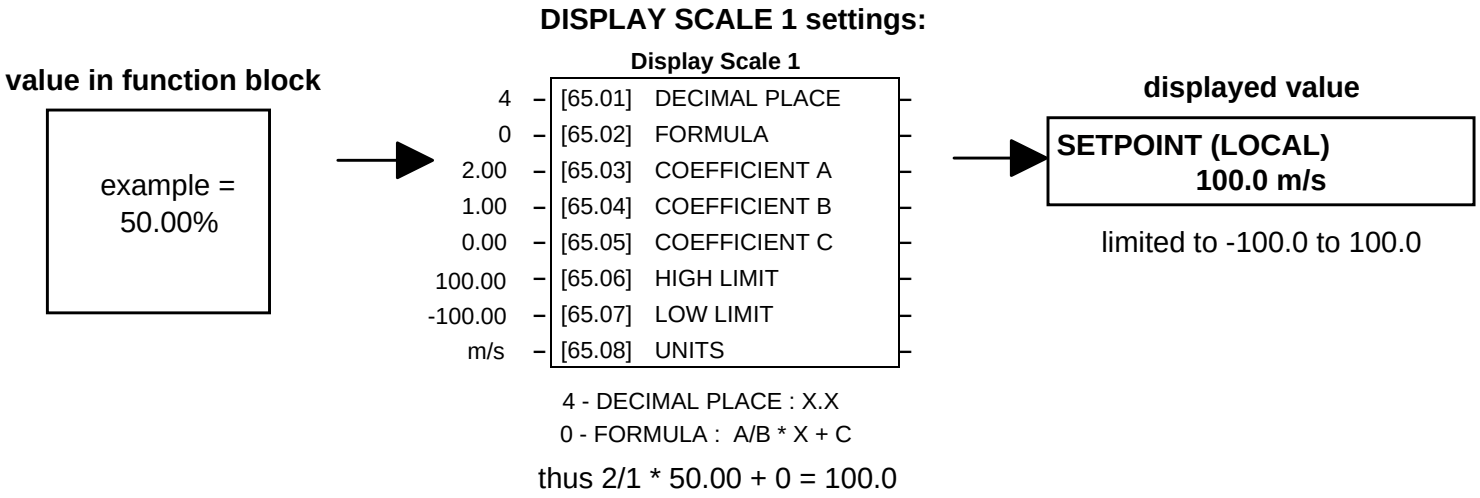

When adjusting parameters, the inverse of the formula is applied to the displayed value:

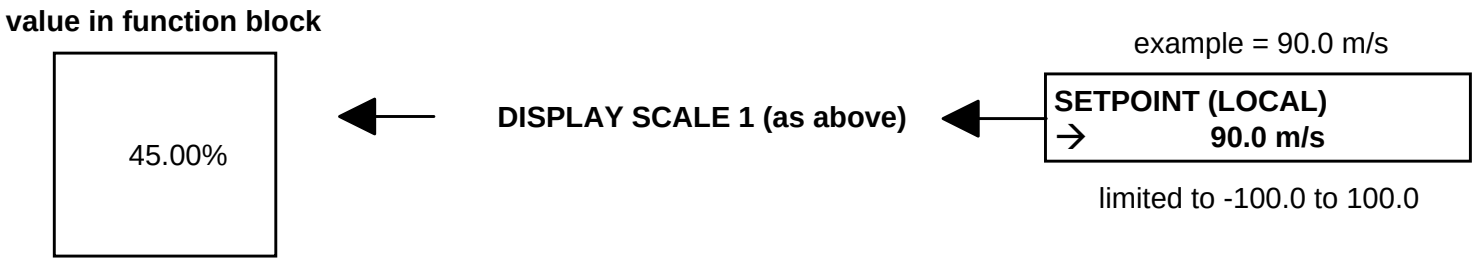

Character Sets

The table below lists the characters supported by the software in decimal and hexadecimal.

	HEX	DEC		HEX	DEC		HEX	DEC		HEX	DEC		HEX	DEC		HEX	DEC
	20	32	0	30	48	@	40	64	P	50	80	′	60	96	p	70	112
!	21	33	1	31	49	A	41	65	Q	51	81	a	61	97	q	71	113
“	22	34	2	32	50	B	42	66	R	52	82	b	62	98	r	72	114
#	23	35	3	33	51	C	43	67	S	53	83	c	63	99	s	73	115
$	24	36	4	34	52	D	44	68	T	54	84	d	64	100	t	74	116
%	25	37	5	35	53	E	45	69	U	55	85	e	65	101	u	75	117
&	26	38	6	36	54	F	46	70	V	56	86	f	66	102	v	76	118
′	27	39	7	37	55	G	47	71	W	57	87	g	67	103	w	77	119
(	28	40	8	38	56	H	48	72	X	58	88	h	68	104	x	78	120
)	29	41	9	39	57	I	49	73	Y	59	89	i	69	105	y	79	121
*	2A	42	:	3A	58	J	4A	74	Z	5A	90	j	6A	106	z	7A	122
+	2B	43	;	3B	59	K	4B	75	[	5B	91	k	6B	107	{	7B	123
,	2C	44	<	3C	60	L	4C	76				l	6C	108	|	7C	124
-	2D	45	=	3D	61	M	4D	77	]	5D	93	m	6D	109	}	7D	125
.	2E	46	>	3E	62	N	4E	78	^	5E	94	n	6E	110			
/	2F	47	?	3F	63	O	4F	79	_	5F	95	o	6F	111	■	0	0

DYNAMIC BRAKING

SETUP::MOTOR CONTROL::DYNAMIC BRAKING

Designed for all Motor Control Modes.

The dynamic braking function block controls the rate at which energy from a regenerating motor is dumped into a resistive load. This dumping prevents the dc link voltage reaching levels which would cause an Overvoltage trip.

Parameter Descriptions

ENABLE *PREF: 99.01* *Default: TRUE* *Range: FALSE / TRUE*

Enables operation of the dynamic braking block.

BRAKE RESISTANCE *PREF: 99.03* *Default: 100.00 Ohm* *Range:0.01 to 300.00 Ohm*

The value of the dynamic braking load resistance.

BRAKE POWER *PREF: 99.04* *Default: 0.1 kW* *Range: 0.1 to 510.0 kW*

The power that the load resistance may continually dissipate.

1SEC OVER RATING *PREF: 99.05* *Default: 25* *Range: 1 to 40*

Multiplier that may be applied to BRAKE POWER for power overloads lasting no more than 1 second.

INT DB RESISTOR *PREF: 99.07* *Default: TRUE* *Range: FALSE / TRUE*

For future use only. Set to FALSE if an external dynamic brake resistor is fitted.

BRAKING *PREF: 99.06* *Default: FALSE* *Range: FALSE / TRUE*

A read-only parameter indicating the state of the brake switch.

Functional Description

When enabled, the DYNAMIC BRAKING block monitors the internal dc link voltage every milli-second and sets the state of the brake switch accordingly.

Programming

The dynamic braking block provides a control signal that is used by the SLEW RATE LIMIT block. This causes the setpoint to be temporarily frozen whenever the dynamic brake is operating because the dc link voltage exceeds the internal comparison level. This allows the stop rate to be automatically tuned to the characteristics of the load, motor, Drive and brake resistor.

The DYNAMIC BRAKING block operates even when the motor output is not enabled. This allows the block to continually monitor the energy dumped into the braking resistor, and the energy dissipated across the brake switch. With this information the Drive is able to deduce the loading on the brake resistor. Optional trips may be enabled should the switch or resistor be loaded beyond its capabilities.

The "Brake Resistor" and "Brake Switch" trips are disabled by default. To enable these trips, refer to TRIPS STATUS, page D-171. When using dynamic braking, the brake resistor information must be entered and these two trips enabled.

Refer also to Chapter 7: “Operating the Drive” - Dynamic Braking.

EMC CAPACITORS

SETUP::MISCELLANEOUS::EMC CAPACITORS

This block allows the user to disconnect the internal EMC "Y" capacitor (DC+ to earth and DC- to earth) from the drive earth on 890 Frames B, C & D.

Parameter Descriptions

EMC CAPACITORS *PREF: 125.01* *Default: 0* *Range: See below*

Electrically connects the internal EMC capacitors inside the product.

Enumerated Value : *Internal EMC "Y " Capacitors*

0 : CONNECTED	Y caps connected to earth
1 : NOT CONNECTED	Y caps disconnected from earth

Caution

Isolating the capacitors in this way will lower the input bridge's immunity to surges.
This will invalidate the EMC certification.

Reasons for Isolation

The drive's "Y" capacitors should be electrically isolated :

- when operating the drive on IT (non-earth referenced supplies)
- when operating the drive in a regenerative common dc link system (remove from all drives in the system)
- to prevent nuisance operation of earth leakage protection devices caused by earth leakage currents flowing in the supply

ENCODER

SETUP::MOTOR CONTROL::ENCODER

This block is used to set up the way that speed feedback is obtained via the feedback option card. Different encoder types may be selected including pulse encoder, sincos encoder and absolute single turn or multi turn. Different encoder types require different hardware options. If an encoder type is selected which does not match the hardware, an error will be flagged.

Parameter Descriptions

PULSE ENC VOLTS *PREF: 71.01* *Default: 10.0 V* *Range: 10.0 to 20.0 V*

Set this approximately to the supply voltage required by the pulse encoder.

SINCOS ENC VOLTS *PREF: 71.22* *Default: 5.0 V* *Range: See below*

Used to set the supply volts required by the sin/cos encoder.

Enumerated Value : SinCos Encoder Volts

0 : 5V
1 : 10V

ENCODER LINES *PREF: 71.02* *Default: 2048* *Range: 250 to 262143*

The number of lines must be set to match the type of encoder being used. Incorrect setting of this parameter will result in an erroneous speed measurement and will cause the motor to become unstable.

ENCODER INVERT *PREF: 71.03* *Default: FALSE* *Range: FALSE/TRUE*

Used to match the encoder direction to the motor direction. The encoder direction is set automatically by the Autotune when running in closed-loop vector mode. It should not be necessary to adjust this parameter. When TRUE, changes the sign of the measured speed and the direction of the position count.

Parameter Descriptions

ENCODER TYPE *PREF: 71.04* *Default: 3* *Range: See below*

This parameter defines the type of encoder being used.

Enumerated Value :	*Type*	
0 :	QUADRATURE	single-ended pulse encoder
1 :	CLOCK/DIR	single-ended pulse encoder
2 :	CLOCK	single-ended pulse encoder
3 :	QUADRATURE DIFF	differential pulse encoder
4 :	CLOCK/DIR DIFF	differential pulse encoder
5 :	CLOCK DIFF	differential pulse encoder
6 :	SINCOS INC	sin/cos encoder
7 :	ABS ENDAT ST	single turn endat absolute encoder
8 :	ABS ENDAT MT	multi-turn endat absolute encoder

Note that if an absolute endat encoder is used, the encoder MUST be wired exactly as specified. If not, it will fail to calibrate the absolute position and an error will result when the drive is started. Its status can be viewed via the parameter CALIBRATN STATUS.

OUTPUT GBOX IN *PREF: 71.05* *Default: 1* *Range: 1 to +2000000000*

See OUTPUT GBOX OUT below.

OUTPUT GBOX OUT *PREF: 71.26* *Default: 1* *Range: -2000000000 to +2000000000*

These two parameters define the gearbox ratio between the motor and the load. For example, if a 3:2 gearbox is fitted between the motor and the load such that the motor turns through 3 revolutions for every 2 revolutions of the load, then set OUTPUT GBOX IN to 3, and set OUTPUT GBOX OUT to 2. The software will then keep track of the load position.

Parameter Descriptions

If the power is removed and then reapplied, it is possible for the drive to keep track of the load position even if the shaft has moved since the power was removed. This is only possible if the encoder is an absolute multi-turn. Otherwise, the load position will be set equal to the motor position on power-up.

ENCODER MECH O/S	*PREF: 71.06*	*Default: 0.0000 deg*	*Range: 0.0000 to 360.0000 deg*

(Encoder mechanical offset). When using an absolute encoder, the SHAFT POSITION diagnostic shows the absolute position of the motor shaft. The zero position can be adjusted by setting ENCODER MECH O/S. Rotate the motor shaft to the position which is required to be zero, and note the value of SHAFT POSITION. Enter this value into ENCODER MECH O/S to zero its position.

ENCODER FEEDBACK	*PREF: 71.30*	*Default: 0.00*	*Range: —.xx RPM*

This parameter shows the mechanical speed of the motor shaft, calculated from the encoder feedback, in RPM.

SHAFT POSITION	*PREF: 71.09*	*Default: —.xx deg*	*Range: —.xx deg*

This diagnostic provides the motor shaft position (before the gear box).

LOAD POSITION	*PREF: 71.10*	*Default: —.xx deg*	*Range: —.xx deg*

This diagnostic provides the motor load position (after the gear box).

REV COUNT	*PREF: 71.15*	*Default: 0*	*Range: —.*

This counts the number of turns of the motor shaft. It will normally start from zero on power-up. If a multi-turn Endat encoder is fitted, REV COUNT will be made to match the multi turn encoder rev count. However, it will continue to count beyond the Endat range of 0 to 4095 revs. It will count to the limits of a 32 bit number, but the lower 12 bits will be equal to the Endat rev count.

Parameter Descriptions

CALIBRATN STATUS *PREF: 71.13* *Default: 0* *Range: see below*

If a sincos absolute Endat encoder is fitted (single-turn or multi-turn), the software will attempt to match the slow absolute position (Endat) information to the fast analog feedback information, to obtain a fast absolute position feedback. This will normally be done on power-up. If the encoder is wired correctly and working correctly, these should match. The CALIBRATN STATUS diagnostic will then display COMPLETED. If the encoder is not an absolute type, the diagnostic will show NOT REQUIRED. If calibration fails, this diagnostic will indicate where the problem may lie. Refer to CAL FAIL RETRY.

Enumerated Value : Type

0 : NOT REQUIRED
1 : DRIVE NOT STOP'D
2 : MOTOR NOT STOP'D
3 : ENDAT FAULT
4 : CAL IN PROGRESS
5 : ID PSN IN PRGRSS
6 : COMPLETED
7 : CALIBRATION LOST
8 : CALIBRATN FAILED

CAL FAIL RETRY *PREF: 71.24* *Default: FALSE* *Range: FALSE / TRUE*

The software will make a number of attempts to calibrate the absolute position (see CALIBRATN STATUS above) and then go into the CALIBRATN FAILED state. If the problem has been corrected, it is necessary to get it to try again. This can be done either by switching the drive on and off, changing a related parameter, or by setting CAL FAIL RETRY = TRUE. When the calibration is done, it will automatically be reset to FALSE.

LINE COUNT X4 *PREF: 71.31* *Default: 0* *Range: _*

Diagnostic showing the encoder line count times 4, i.e. each edge is counted. This diagnostic is set to 0 at power-up and reset when RESET LINE COUNT is TRUE.

RESET LINE COUNT *PREF: 71.23* *Default: FALSE* *Range: FALSE / TRUE*

If TRUE the LINE COUNT X4 diagnostic is reset.

Functional Description

A quadrature encoder uses 2 input signals (A and B), phase shifted by a quarter of a cycle (90°). Direction is obtained by looking at the combined state of A and B.

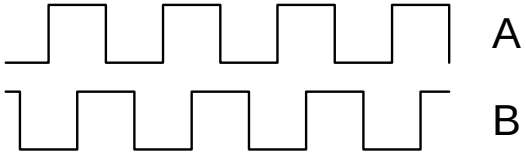

Speed is calculated using the following function:

$$\text{SPEED HZ} = \frac{\text{Counts Per Second}}{\text{Lines x 4}}$$

where counts per second are the number of edges received from the encoder. There are 4 counts per line.

ENERGY METER

SETUP::MOTOR CONTROL::ENERGY METER

Designed for all Motor Control Modes.

This block measures the electrical energy used by the motor.

Parameter Descriptions

RESET *PREF: 113.01* *Default: FALSE* *Range: FALSE / TRUE*

When RESET is set to TRUE, the ENERGY USED parameter is reset to zero automatically when the maximum value is reached.

When RESET is set to FALSE, the ENERGY USED parameter is held at the maximum value when the maximum value has been reached

Changing this from FALSE to TRUE at anytime will cause the ENERGY USED parameter to be reset to zero.

POWER *PREF: 113.02* *Default: 0.00 kW* *Range: —.xx kW*

This diagnostic shows the power being delivered to the load in kilowatts.

POWER *PREF: 113.03* *Default: 0.00 hp* *Range: —.xx hp*

This diagnostic shows the power being delivered to the load in horsepower.

REACTIVE POWER *PREF: 113.04* *Default: 0.00 kVAR* *Range: —.xx kVAR*

This diagnostic shows the reactive power being delivered to the load in kilo volt-amperes reactive.

ENERGY USED *PREF: 113.05* *Default: 0.00 kW hr* *Range: —.xx kW hr*

This diagnostic shows the total energy consumed by the load in kilowatt hours.

POWER FACTOR *PREF: 113.07* *Default: 0.0* *Range: —.x*

This diagnostic shows the power factor estimate (between 0 and 1).

PF ANGLE *PREF: 113.08* *Default: 0.00 deg* *Range: —.xx deg*

This diagnostic shows the power factor angle estimate.

Parameter Descriptions

RAW POWER	*PREF: 113.09*	*Default: 0.00 kW*	*Range: —.xx kW*

This diagnostic shows the unfiltered estimate of active input power

RAW R. POWER	*PREF: 113.10*	*Default: 0.00 kVAR*	*Range: —.xx kVAR*

This diagnostic shows the unfiltered estimate of reactive input power.

FEEDBACKS

SETUP::MOTOR CONTROL::FEEDBACKS

Designed for all Motor Control Modes.

The FEEDBACKS block allows you to view speed feedback and motor current related diagnostics.

Parameter Descriptions

QUADRATIC TORQUE *PREF: 70.01* *Default: FALSE* *Range: FALSE/TRUE*

Designed for all Motor Control Modes.

When TRUE, selects QUADRATIC allowing higher continuous ratings with less overload capability. Quadratic Torque operation is especially suited to fan or pump applications. When FALSE, selects CONSTANT duty.

OVERLOAD LEVEL *PREF: 70.20* *Default: HIGH* *Range: See below*

Designed for all Motor Control Modes, except PMAC control mode.

This reduces I*t limit for shaftless printing applications. However, with OVERLOAD LEVEL set to LOW, no pwm frequency reduction occurs during overload conditions.

Enumerated Value :	*Level*	
0 :	LOW	130% for 60s : sets the I*t limit
1 :	HIGH	150% for 60s : sets the I*t limit

DC LINK VOLTS *PREF: 70.02* *Default: —. V* *Range: —. V*

This shows the voltage across the dc link capacitors.

TERMINAL VOLTS *PREF: 70.03* *Default: —. V* *Range: —. V*

This shows the rms voltage, between phases, applied by the Drive to the motor terminals.

Parameter Descriptions

SPEED FBK RPM *PREF: 70.04* *Default: —.xx rpm* *Range: —.xx rpm*

This parameter changes according to the CONTROL MODE (DRIVE CONFIG function block):

- In CLOSED-LOOP VEC mode the parameter shows the mechanical speed of the motor shaft in revolutions per minute as calculated from the speed feedback device.
- In SENSORLESS VEC mode the parameter shows the calculated mechanical speed of the motor shaft in revolutions per minute.
- In VOLTS/Hz mode the parameter shows motor synchronous speed in rpm.
- In PMAC control mode, the parameter shows the mechanical speed of the motor shaft.

SPEED FBK REV/S *PREF: 70.05* *Default: —.xx rev/s* *Range: —.xx rev/s*

This parameter changes according to the CONTROL MODE (DRIVE CONFIG function block):

- In CLOSED-LOOP VEC mode the parameter shows the mechanical speed of the motor shaft in revolutions per second as calculated from the motor speed feedback.
- In SENSORLESS VEC mode the parameter shows the calculated mechanical speed of the motor shaft in revolutions per second.
- In VOLTS / Hz mode, the parameter shows the motor synchronous speed in revolutions per second.
- In PMAC control mode, the parameter shows the mechanical speed of the motor shaft.

Parameter Descriptions

SPEED FBK % *PREF: 70.06* *Default: —.xx %* *Range: —.xx %*

This parameter changes according to the CONTROL MODE (DRIVE CONFIG function block):

- In CLOSED-LOOP VEC mode the parameter shows the mechanical speed of the motor shaft as a percentage of the user maximum speed setting (MAX SPEED in the REFERENCE function block) as calculated from the motor speed feedback.
- In SENSORLESS VEC mode the parameter shows the calculated mechanical speed of the motor shaft as a percentage of the user maximum speed setting (MAX SPEED in the REFERENCE function block).
- In VOLTS / Hz mode, the parameter shows the electrical drive output frequency as a percentage of the user maximum speed setting (MAX SPEED in the REFERENCE function block).
- In PMAC control mode, the parameter shows the mechanical speed of the motor shaft.

TORQUE FEEDBACK *PREF: 70.10* *Default: —.xx %* *Range: —.xx %*

In PMAC Motor Control Mode, this shows the estimated motor torque as a percentage of the PERM TORQUE in the PMAC MOTOR 1 function block.

FIELD FEEDBACK *PREF: 70.11* *Default: —.xx %* *Range: —.xx %*

Designed for all Motor Control Modes, except PMAC control mode (in PMAC Motor Control Mode, the value is always 0).

A value of 100% indicates the motor is operating at rated magnetic flux (field).

MOTOR CURRENT % *PREF: 70.12* *Default: —.xx %* *Range: —.xx %*

In PMAC Motor Control Mode, this diagnostic shows the level of rms line current being drawn from the drive as a percentage of the PERM CURRENT in the MOTOR PMAC 1 function block.

MOTOR CURRENT A *PREF: 70.13* *Default: —.xx A* *Range: —.xx A*

In PMAC Motor Control Mode, this diagnostic shows the level of rms line current in Amps being drawn from the Drive.

STACK RATING A *PREF: 70.19* *Default: —.x A* *Range: —.x A*

This diagnostic indicates the stack rating in Amps. This reduces as a function of pwm switching frequency.

Parameter Descriptions

HEATSINK TEMP	*PREF: 70.17*	*Default: —. C*	*Range: —. C*

This diagnostic displays the power stack heatsink temperature in °Centigrade.

HEATSINK TEMP	*PREF: 70.18*	*Default: —. %*	*Range: —. %*

This diagnostic displays the power stack heatsink temperature as a percentage of the overtemperature trip level.

FIREWIRE

SETUP:: COMMS::FIREWIRE

The Firewire block parameterises Firewire communications, providing a series of diagnostics. There are no user settable parameters in this block.

Parameter Descriptions

OWN ID	*PREF: 117.01*	*Default: 99*	*Range: —.*

FireWire network ID of the drive. This is the physical address, not the net address, as declared as part of the DSE Configuration. Note that this network ID can change after a Bus Reset.

IRM ID	*PREF: 117.02*	*Default: 99*	*Range: —.*

FireWire network ID of the drive acting as the Isochronous Resource Manager. The IRM ID can change after a Bus Reset.

NUMBER OF NODES	*PREF: 117.03*	*Default: 0*	*Range: —.*

Total number of Firewire Nodes connected to the network..

CYCLE TIMER	*PREF: 117.04*	*Default: 0*	*Range: —.*

Timer which should be synchronised across the Firewire network.

BUS RESETS	*PREF: 117.05*	*Default: 0*	*Range: —.*

Number of times the Firewire bus has reset.

BAD MESSAGES	*PREF: 117.13*	*Default: 0*	*Range: —.*

Number of incoming Firewire messages that are received malformed. An incrementing value may indicate that the Firewire cabling needs attention.

MISSED TX ACKS	*PREF: 117.14*	*Default: 0*	*Range: —.*

Number of outgoing Firewire messages that are not acknowledged. An incrementing value may indicate that the Firewire cabling needs attention.

MCAP ADVERTS	*PREF: 117.06*	*Default: 0*	*Range: —.*

Count of Multicast Advertisements sent from this node.

Parameter Descriptions

MAX HOPS	*PREF: 117.07*	*Default: 0*	*Range: —.*

Maximum number of cable hops from this node to all other nodes.

OFFSET (40.69ns)	*PREF: 117.08*	*Default: 0*	*Range: —.*

Time delay between this node and the node hosting the Cycle Time Master.

FIREWIRE REF

SETUP:: PHASE CONTROL::FIREWIRE REF

Performance Level = ADVANCED : CLOSED-LOOP VEC Motor Control Mode only.

The FireWire option card (Option B) must be fitted to the drive.

This block processes Virtual Master commands received over Firewire communications; producing position, speed and acceleration references to be used by the control loops, when Firewire is selected as the reference source (Firewire Comms Sel is TRUE in Comms Control block).

Parameter Descriptions

CHANNEL *PREF: 119.01* *Default: 0* *Range: 0 to 62*

This parameter sets the Firewire channel that the master reference is being received from.

RESET *PREF: 119.02* *Default: FALSE* *Range: FALSE / TRUE*

This parameter resets the Outputs to zero. Note if this is set TRUE whilst the drive is running following the Firewire Reference, then the drive will decelerate to zero speed on the System Ramp.

INVERT *PREF: 119.03* *Default: FALSE* *Range: FALSE / TRUE*

This parameter inverts the master reference. Note that this inversion does not take place locally in the drive, so the master and local diagnostics below will always be in the same direction.

GEAR RATIO A *PREF: 119.04* *Default: 1000000* *Range: -2000000000 to 2000000000*

This parameter provides a Gear Ratio A/B (see GEAR RATIO B) inserted between master reference input and Firewire Ref outputs. Output = Gear ratio A / Gear Ratio B * Master Input.

GEAR RATIO B *PREF: 119.05* *Default: 1000000* *Range: -2000000000 to 2000000000*

This parameter provides a Gear Ratio A/B (see GEAR RATIO A) inserted between master reference input and Firewire Ref outputs. Output = Gear ratio A / Gear Ratio B * Master Input.

Parameter Descriptions

POSITION OUTPUT	*PREF: 119.06*	*Default: —.xxxx deg*	*Range: —.xxxx deg*

This diagnostic shows the position demand in load mechanical degrees.

SPEED OUTPUT	*PREF: 119.07*	*Default: —.xx Hz*	*Range: —.xx Hz*

This diagnostic shows the speed demand in load mechanical Hz (rev/s).

ACCEL OUTPUT	*PREF: 119.08*	*Default: —.xx*	*Range: —.xx*

This diagnostic shows the acceleration demand in load mechanical Hz/s (rev/s^2).

MASTER POSITION	*PREF: 119.09*	*Default: —.xxxx deg*	*Range: —.xxxx deg*

This diagnostic shows the master aster position demand in mechanical degrees.

MASTER SPEED	*PREF: 119.10*	*Default: —.xxxx Hz*	*Range: —.xxxx Hz*

This diagnostic shows the master speed demand in mechanical Hz (rev/s).

MASTER ACCEL	*PREF: 119.11*	*Default: —.xxxx*	*Range: —.xxxx*

This diagnostic shows the master acceleration demand in mechanical Hz/s (rev/s^2).

READY	*PREF: 119.14*	*Default: FALSE*	*Range: FALSE / TRUE*

This diagnostic is TRUE when local drive is properly synchronised with the master, i.e. Status = READY.

Parameter Descriptions

STATUS *PREF: 119.13* *Default: 7* *Range: See below*

This diagnostic shows operating and error states

Enumerated Value : *Status*	
0 : READY	the Firewire Ref is operating normally
1 : REF RESET	the FireWire Ref RESET is set TRUE
2 : MASTER RESET	the Virtual Master is in Reset
3 : LOST SYNC	time stamp difference to large
4 : DUP MASTER	more than one Virtual Master with the same channel
5 : MISSING MASTER	no Virtual Master with selected channel
6 : NO FIREWIRE	no FireWire - either not fitted or no PHY power
7 : DISABLED	the FireWire CHANNEL is set to 0

FLUXING

SETUP::MOTOR CONTROL::FLUXING

Designed for VOLTS/Hz motor Control Mode.

This function block allows user parameterisation of the conventional (volts/hertz) fluxing strategy of the Drive. This is achieved though three flexible Volts-to-frequency templates. Starting torque performance can also be tailored through the FIXED BOOST, ACCELRTN BOOST and AUTO BOOST parameters.

Parameter Descriptions

V/F SHAPE *PREF: 21.01* *Default: 0* *Range: See below*

This parameter determines the type of volts to frequency template that is used to flux the motor. The choices for this parameter are:

Enumerated Value : *V/F Shape*

0 : LINEAR LAW	This gives a constant flux characteristic up to the BASE FREQUENCY (see MOTOR INDUCTION function block).
1 : FAN LAW	This gives a quadratic flux characteristic up to the BASE FREQUENCY. This matches the load requirement for fan and most pump applications
2 : USER DEFINED	This gives a user defined flux characteristic up to the BASE FREQUENCY.

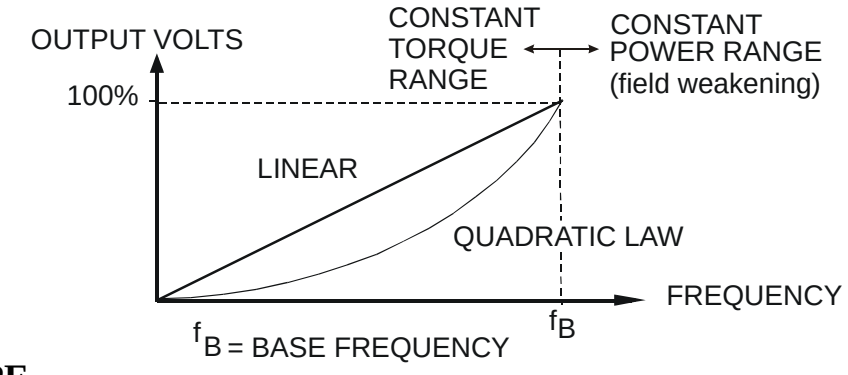

V/F SHAPE

Parameter Descriptions

FIXED BOOST *PREF: 21.03* *Default: 0.00 %* *Range: 0.00 to 25.00 %*

This parameter allows for no-load stator resistance voltage drop compensation. This correctly fluxes the motor (under no-load conditions) at low output frequencies, thereby increasing available motor torque. Fixed boost can be set in addition to auto boost and acceleration boost.

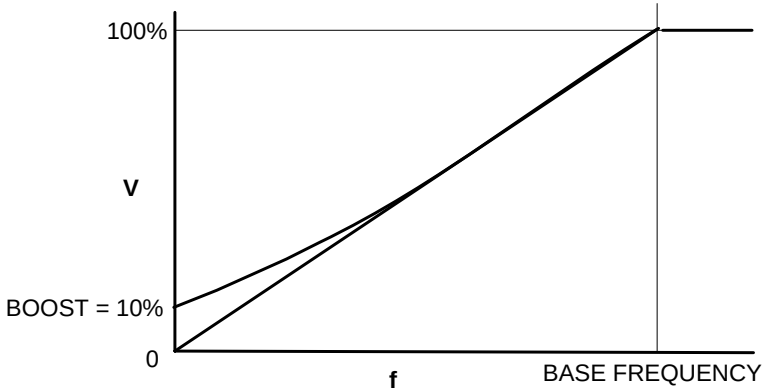

AUTO BOOST *PREF: 21.04* *Default: 0.00 %* *Range: 0.00 to 25.00 %*

This parameter allows for load dependent stator resistance voltage drop compensation. This correctly fluxes the motor (under load conditions) at low output frequencies, thereby increasing available motor torque. Auto boost can be set in addition to fixed boost.

The value of the AUTO BOOST parameter determines level of additional volts supplied to the motor for 100% load.

Setting the value of auto boost too high can cause the Drive to enter current limit. If this occurs, the Drive will be unable to ramp up in speed. Reducing the value of auto boost will eliminate this problem.

ACCELRTN BOOST *PREF: 21.08* *Default:0.00 %* *Range: 0.00 to 25.00 %*

This parameter provides an additional amount of fixed boost when the drive is accelerating. This can help when starting heavy/high stiction loads.

Parameter Descriptions

ENERGY SAVING	*PREF: 21.09*	*Default: FALSE*	*Range: FALSE / TRUE*

When set TRUE, the demanded volts are reduced to minimise energy consumption if the drive is operating in a steady state at light load.

USER FREQ 1 to 10	*PREF: 21.10, 21.12, 21.14, 21.16, 21.18, 21.20, 21.22, 21.24, 21.26,21.28*	*Default: Refer to Parameter Table*	*Range: 0.0 to 100.0 %*

These parameters provide 10 frequency points, which together with the USER VOLTAGE parameters, provide the user defined voltage profile. (USER FREQ n, USER VOLTAGE n) provide up to 10 (x,y) points on this profile. The USER FREQ parameters are defined as a percentage of the BASE FREQUENCY parameter (refer to the MOTOR INDUCTION function block).

USER VOLTAGE 1 to 10	*PREF: 21.9, 21.11, 21.13, 21.15, 21.17, 21.19, 21.21, 21.23, 21.25,21.27, 21.29*	*Default: Refer to Parameter Table*	*Range: 0.0 to 100.0 %*

These parameters provide 10 voltage points, which together with the USER FREQ parameters, provide the user defined voltage profile. (USER FREQ n, USER VOLTAGE n) provide up to 10 (x,y) points on this profile. The USER VOLTAGE parameters are defined as a percentage of the MOTOR VOLTAGE parameter (refer to the MOTOR INDUCTION function block).

Functional Description

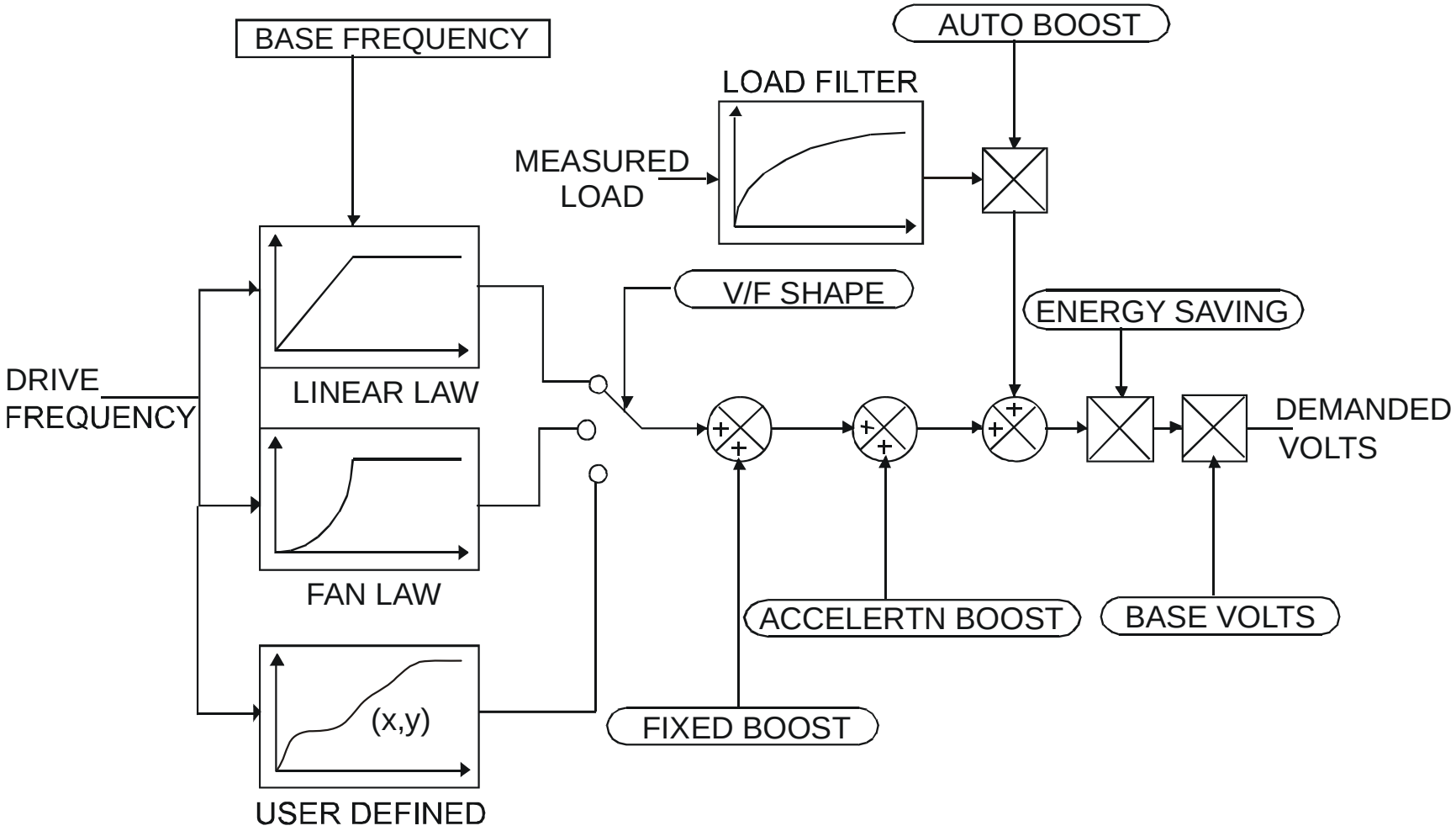

V/F Shape

The function block allows the user to parameterise the Drive's conventional V/F motor fluxing scheme. Three V/F shapes are available, LINEAR LAW, FAN LAW and USER DEFINED:

- Linear Law V/F shape should be used in applications requiring constant motor torque though out the speed range (e.g. machine tools or hoists).
- Fan Law V/F shape provides extra energy savings for fan or pump applications.
- User Defined V/F shape provides a method for the user to define any profile. 10 user definable (x,y) points are provided. Liner interpolation is used between each point. The drive also assumes the following points - (0%,0%) and (100%,100%) - though these may be overridden. For example, (USER FREQ 1 = 0%, USER VOLTAGE 1 = 5%) takes precedence over (0%, 0%).

For any of these V/F shapes the BASE FREQUENCY parameter (in the MOTOR INDUCTION function block) which is the value of Drive output frequency at which maximum output volts is provided, can be set by the user.

Boost Parameters

- Correct no-load motor fluxing at low Drive output frequencies can be achieved by setting the FIXED BOOST parameter.
- Correct motor fluxing under load conditions is achieved by setting the AUTO BOOST parameter. The motor is correctly fluxed when the FIELD FBK diagnostic in the FEEDBACKS function block reads 100.0% .
- Additional FIXED BOOST can be applied during acceleration by setting the ACCELERTN BOOST parameter. This can be useful for starting heavy/high stiction loads.

Saving Energy

An ENERGY SAVING mode is provided which, when enables under low load conditions in the steady state, attempts to reduce the output voltage so that minimum energy is used.

FLYCATCHING

SETUP::MOTOR CONTROL::FLYCATCHING

Designed for all Motor Control Modes.

This block performs a directional speed search. It allows the Drive to seamlessly catch a spinning motor before controlling the motor to the desired setpoint. This is especially useful for large inertia fan loads, where drafts in building air ducts can cause a fan to `windmill'.

Parameter Descriptions

VHZ ENABLE *PREF: 69.01* *Default: FALSE* *Range: FALSE / TRUE*

Enables flycatching in Volts/Hz Control mode when TRUE.

VECTOR ENABLE *PREF: 69.15* *Default: FALSE* *Range: FALSE / TRUE*

Enables flycatching in Vector Control mode when TRUE.

START MODE *PREF: 69.02* *Default: 0* *Range: See below*

The mode of operation for the flycatching sequence software.

Enumerated Value : *Start Mode*

0 : ALWAYS
1 : TRIP OR POWERUP
2 : TRIP

SEARCH MODE *PREF: 69.03* *Default: 0* *Range: See below*

The type of speed search carried out by the flycatching sequence.

Enumerated Value : *Search Mode*

0 : BIDIRECTIONAL
1 : UNIDIRECTIONAL

Parameter Descriptions

SEARCH VOLTS *PREF: 69.04* *Default: 9.00 %* *Range: 0.00 to 100.00 %*

The percentage level of the search volts applied to the motor during the speed search phase of the flycatching sequence. Increasing this parameter improves the accuracy of the discovered motor speed but increases the braking influence of the speed search on the rotating motor.

SEARCH BOOST *PREF: 69.05* *Default: 40.00 %* *Range: 0.00 to 50.00 %*

The level of search boost applied to the motor during the speed search phase of the flycatching sequence.

SEARCH TIME *PREF: 69.06* *Default: 5.0 s* *Range: 0.1 to 60.0 s*

The search rate during the speed search phase of the flycatching sequence. Performing the flycatching speed search too quickly can cause the drive to inaccurately identify the motor speed. Refluxing at an inaccurate motor speed can cause the drive to trip on overvoltage. If this occurs, increasing this parameter will reduce the risk of tripping.

MIN SEARCH SPEED *PREF: 69.07* *Default: 5.0 Hz* *Range: 0.0 to 500.0 Hz*

The lowest search speed before the speed search phase of the flycatching sequence is considered to have failed.

REFLUX TIME *PREF: 69.08* *Default: 3.0 s* *Range: 0.1 to 20.0 s*

The rate of rise of volts from the search level to the working level after a successful speed search. Refluxing the motor too quickly can cause the Drive to trip on either overvoltage or overcurrent. In either case, increasing this parameter will reduce the risk of tripping.

ACTIVE *PREF: 69.13* *Default: FALSE* *Range: FALSE / TRUE*

A diagnostic output indicating whether the flycatching sequence is active.

SETPOINT *PREF: 69.14* *Default: —.xx %* *Range —.xx %*

This diagnostic output is the setpoint caught at the end of a successful flycatching sequence.

Functional Description

The flycatching function enables the drive to be restarted smoothly into a spinning motor. It applies small search voltages to the motor whilst ramping the Drive frequency from maximum speed to zero. When the motor load goes from motoring to regenerating, the speed search has succeeded and is terminated. If the search frequency falls below the minimum search speed, the speed search has failed and the Drive will ramp to the speed setpoint from zero.

The flycatching sequence can be triggered by different starting conditions:

ALWAYS:	All starts (after controlled or uncontrolled stop, or after a power-up)
TRIP or POWER-UP:	After uncontrolled stop, i.e. trip or coast, or after a power-up
TRIP:	After uncontrolled stop, i.e. trip or coast

The type of speed sequence may be Bi-directional or Unidirectional:

Bi-directional

Initially, the search is performed in the direction of the speed setpoint. If the drive fails to identify the motor speed in this direction, a second speed search is performed in the reverse direction.

Unidirectional

The search is performed only in the direction of the speed setpoint.

I/O TRIPS

SETUP::TRIPS::I/O TRIPS

This function block is designed to operate in conjunction with the Analog and Digital Input function blocks to trip the Drive on a loss of setpoint input or safety control input.

Parameter Descriptions

INVERT THERMIST *PREF: 98.01* *Default: FALSE* *Range: FALSE / TRUE*

Inverts the sense of the motor thermistor input. The default FALSE is normally-closed/low impedance.

INVERT ENC TRIP *PREF: 98.02* *Default: FALSE* *Range: FALSE / TRUE*

Inverts the sense of the encoder fail input on the encoder Technology Box.

EXT TRIP MODE *PREF: 98.08* *Default: DISABLED* *Range: See below*

Determines the special function of digital input 5.

Enumerated Value : *External Trip Mode*

0 : TRIP - A low at digital input 5 will cause an external trip
1 : COAST - A low at digital input 5 will cause the motor to coast to stop. The drive will not trip.
2 : DISABLED - Digital input 5 does not have any special function.

INPUT 1 BREAK *PREF: 98.03* *Default: FALSE* *Range: FALSE / TRUE*

A general purpose signal designed to be internally wired to the function block ANALOG INPUT 3, BREAK parameter. When this signal goes TRUE this causes an INPUT 1 BREAK trip to occur, (unless this trip is disabled within the TRIPS STATUS function block, see the DISABLED WORD parameter).

This parameter is not saved in the Drive's non-volatile memory and thus is reset to the default setting at power-up.

Parameter Descriptions

INPUT 2 BREAK	*PREF: 98.04*	*Default: FALSE*	*Range: FALSE / TRUE*

A general purpose signal designed to be internally wired to the function block ANALOG INPUT 4, BREAK parameter. When this signal goes TRUE this causes an INPUT 2 BREAK trip to occur, (unless this trip is disabled within the TRIPS STATUS function block, see the DISABLED WORD parameter).

This parameter is not saved in the Drive's non-volatile memory and thus is reset to the default setting at power-up.

THERMISTOR	*PREF: 98.05*	*Default: FALSE*	*Range: FALSE / TRUE*

The current state of the motor thermistor trip input, modified by INVERT THERMIST input.

ENCODER	*PREF: 98.06*	*Default: FALSE*	*Range: FALSE / TRUE*

The current state of the encoder feedback card (Option F) error trip input. TRUE is tripped.

EXTERNAL TRIP	*PREF: 98.07*	*Default: FALSE*	*Range: FALSE / TRUE*

If external trip mode is set to Coast or Trip then this shows the state of the latched trip caused by external trip, (digital input 5). If the external trip mode is set to Disabled, this output will be FALSE.

COMMS BREAK	*PREF: 98.09*	*Default: FALSE*	*Range: FALSE / TRUE*

Setting this parameter to True causes the COMMS BREAK trip.

Functional Description

The I/O TRIPS function block allows trips to be generated by signals on the input terminals of the Drive. Refer to Chapter 10 for a description of the trips supported by the Drive.

INERTIA COMP

SETUP::MOTOR CONTROL::INERTIA COMP

This block is used to provide a torque feed forward to compensate for friction and inertia effects whilst the drive is running.

Parameter Descriptions

FRICTN AT 0 RPM	*PREF: 122.01*	*Default: 0.00 %*	*Range: 0.00 to 100.00 %*
Static friction compensation gain.			
FRN AT NMPLT RPM	*PREF: 122.02*	*Default: 0.00 %*	*Range: 0.00 to 100.00 %*
Dynamic Friction compensation gain.			
RELATIVE INERTIA	*PREF: 122.03*	*Default: 0.00 %*	*Range: 0.0000 to 30000.0000 %*
Inertia compensation gain.			
FRICTION COMP	*PREF: 122.04*	*Default: —.xx %*	*Range: —.xx %*
This diagnostic shows Torque Feedforward component due to friction compensation.			
INERTIA COMP	*PREF: 122.05*	*Default: —.xx %*	*Range: —.xx %*
This diagnostic shows the Torque Feedforward component due to inertia compensation.			
TORQ FEEDFORWARD	*PREF: 122.06*	*Default: —.xx %*	*Range: —.xx %*
This diagnostic shows the Total torque feedforward.			
SPEED PI OUTPUT	*PREF: 122.07*	*Default: —.xx %*	*Range: —.xx %*
This diagnostic shows the Speed Loop Output – it is provided here to assist with tuning compensation values.			

Functional Description

To Set-up Friction at 0 RPM

Run the drive at a very low speed. Observe the SPEED PI OUTPUT diagnostic and set the FRICTN AT 0 RPM parameter to this value. Return to the SPEED PI OUTPUT diagnostic and verify that it is now zero, or that the noise on the diagnostic is equally positive and negative.

To Set-up Friction at Nameplate RPM

Run the drive at nameplate rpm observe the SPEED PI OUTPUT diagnostic and set the FRN AT NMPLT RPM parameter to this value. Return to the SPEED PI OUTPUT diagnostic and verify that it is now zero, or that the noise on the diagnostic is equally positive and negative.

After friction compensation has been set up, the RELATIVE INERTIA parameter can now be set. Relative Inertia is equal to torque (per unit) / acceleration (revs/s^2).

Optionally, if the system inertia is known, calculate a starting value to put into the RELATIVE INERTIA parameter. Then check the value by accelerating the motor plus load and confirming that the PI diagnostic is around zero. Alternatively, find the Relative Inertia by trial and error: choose a convenient ramp up time, accelerate the motor plus load observing the PI diagnostic, and find a value of Relative Inertia such that the PI diagnostic is around zero during acceleration and deceleration.

INJ BRAKING

SETUP::MOTOR CONTROL::INJ BRAKING

Designed for VOLTS/Hz Motor Control Mode.

The injection braking block provides a method of stopping spinning induction motors without returning the kinetic energy of the motor and load back in to the dc link of the Drive. This is achieved by running the motor highly inefficiently so that all the energy stored in the load is dissipated in the motor. Thus, high inertia loads can be stopped without the need for an external dynamic braking resistor.

Parameter Descriptions

DEFLUX TIME *PREF: 29.01* *Default: 0.5 s* *Range: 0.1 to 20.0 s*

Determines the time in which the Drive defluxes the motor prior injection braking.

FREQUENCY *PREF: 29.02* *Default: 9.0 Hz* *Range: 1.0 to 500.0 Hz*

Determines the maximum frequency applied to the motor for the low frequency injection braking mode. It is also clamped internally so as never to exceed 50% of base speed value.

I-LIM LEVEL *PREF: 29.03* *Default: 100.00 %* *Range: 50.00 to 150.00 %*

Determines the level of motor current flowing during low frequency injection braking.

DC PULSE *PREF: 29.04* *Default: 2.0 s* *Range: 0.0 to 100.0 s*

Determines the duration of the dc pulse applied to the motor when injection braking is required for motor speeds below 20% of base speed. The actual dc pulse time applied to the motor is dependent on the ratio of initial motor speed to 20% of base speed.

FINAL DC PULSE *PREF: 29.05* *Default: 1.0 s* *Range: 0.0 to 10.0 s*

Determines the duration of the final dc holding pulse applied to the motor after either low frequency injection braking or timed dc pulse.

DC LEVEL *PREF: 29.06* *Default: 3.00 %* *Range: 0.00 to 25.00 %*

Determines the level of dc pulse applied to the motor during either the timed or final dc pulse.

Parameter Descriptions

TIMEOUT	*PREF: 29.07*	*Default: 600.0 s*	*Range: 0.0 to 600.0 s*

Determines the maximum amount of time the sequence is allowed to remain in the low frequency injection braking state.

BASE VOLTS	*PREF: 29.08*	*Default: 100.00 %*	*Range: 0.00 to 115.47 %*

Determines the maximum volts at base speed applied to the motor during injection braking.

ACTIVE	*PREF: 29.09*	*Default: FALSE*	*Range: FALSE / TRUE*

Indicates the state of the Drive. TRUE when injection braking.

INVERSE TIME PMAC

SETUP::MOTOR CONTROL::INVERSE TIME PMAC

Designed for PMAC control mode.

The purpose of the inverse time is to automatically reduce the drive current limit in response to prolonged overload conditions (drive protection).

For Frames B, C & D:

Under normal conditions, the drive current limit is set to the minimum value between:

- 200% of the permanent Drive current (STACK CURRENT parameter of the FEEDBACKS Function Block)
- MAX CURRENT parameter of the MOTOR PMAC 1 Function Block

If the Drive speed becomes lower than 2.5 (electrical) Hz, the DELAY time is automatically reduced to 25% of its value.

As the drive current exceeds the AIMING POINT level, the excess current is integrated. Motor current is allowed to flow at the minimum value between 200% of permanent drive current and MAX CURRENT (refer to the MOTOR PMAC 1 function block) for a period defined by the DELAY parameter. At this point the inverse time current limit is ramped down from the MAX CURRENT. The rate at which the inverse time current limit is ramped to the AIMING POINT is defined by DOWN TIME.

Once the overload condition is removed, the inverse time current limit level is ramped back toward the minimum value between 200% of permanent drive current and MAX CURRENT at a rate determined by the UP TIME.

For Other Frame Sizes:

Under Normal conditions, the drive limit is set to the minimum value between:

- 150% of the permanent drive current,
- MAX CURRENT parameter of the MOTOR PMAC 1 Function block for a delay value of 60s.

In Quadratic Torque mode, the allowed overload is reduced to 110% for 60s before inverse time current limit action occurs.

Parameter Descriptions

AIMING POINT	*PREF: 162.01*	*Default: 105.00 %*	*Range: 50.00 to 105.00%*

Determines the final level of the inverse time current limit after a period of prolonged motor overload

DELAY	*PREF: 162.02*	*Default: 4.0 s*	*Range: 0.5 to 4.0s*

Determines the maximum allowed overload duration before inverse time current limit action is taken. This value is based on 200% overload.

DOWN TIME	*PREF: 162.03*	*Default: 1.0 s*	*Range: 0.5 to 2.0s*

Determines the rate at which the inverse time current limit is ramped to the AIMING POINT after a period of prolonged overload.

UP TIME	*PREF: 162.04*	*Default: 1.0 s*	*Range: 0.5 to 2.0s*

Determines the rated at which the inverse time current limit is ramped back to the minimum value between 200% of permanent drive current and MAX CURRENT (refer to MOTOR PMAC 1 Function Block) once the overload is removed.

IT LIMITING	*PREF: 162.05*	*Default: FALSE*	*Range: FALSE / TRUE*

This diagnostic indicates if the inverse time current limit is active.

INVERSE TIME OP	*PREF: 162.06*	*Default: —.00 %*	*Range: —.00 %*

This diagnostic indicates the present level of current that is allowed by the associated motor.

If the MAX CURRENT is higher than the drive permanent current, this value is more than 100%.

If the MAX CURRENT is lower than the drive permanent current; this value is less than 100%.

IT WARNING	*PREF: 162.07*	*Default: FALSE*	*Range: FALSE/TRUE*

This diagnostic indicates if the reduction is acting or not.

INVERSE TIME

SETUP::MOTOR CONTROL::INVERSE TIME

Designed for all Motor Control Modes, except PMAC control mode.

The purpose of the inverse time is to automatically reduce the drive current limit in response to prolonged overload conditions. As the motor current exceeds the AIMING POINT level, the excess current is integrated. Motor current is allowed to flow at the CURRENT LIMIT (refer to the CURRENT LIMIT function block) for a period defined by the DELAY parameter. At this point the inverse time current limit is ramped down from the CURRENT LIMIT. The rate at which the inverse time current limit is ramped to the AIMING POINT is defined by DOWN TIME.

Once the overload condition is removed, the inverse time current limit level is ramped back toward the CURRENT LIMIT at a rate determined by the UP TIME.

In Quadratic Torque mode, the allowed overload is reduced to 110.0 % for 60.0 s before inverse time current limit action occurs.

Parameter Descriptions

AIMING POINT *PREF: 84.01* *Default: 105.00 %* *Range: 50.00 to 150.00%*

Determines the final level of the inverse time current limit after a period of prolonged motor overload

DELAY *PREF: 84.02* *Default: 60.0 s* *Range: 5.0 to 60.0s*

Determines the maximum allowed overload duration for 150.0 % motor current (110.0% in QUADRATIC TORQUE mode) before inverse time current limit action is taken.

DOWN TIME *PREF: 84.03* *Default: 10.0 s* *Range: 1.0 to 10.0s*

Determines the rate at which the inverse time current limit is ramped to the AIMING POINT after a period of prolonged overload.

Parameter Descriptions

UP TIME	*PREF: 84.04*	*Default: 120.0 s*	*Range: 1.0 to 600.0s*

Determines the rated at which the inverse time current limit is ramped back to the CURRENT LIMIT (refer to the CURRENT LIMIT function block) once the overload is removed.

IT LIMITING	*PREF: 84.05*	*Default: FALSE*	*Range: FALSE / TRUE*

This diagnostic indicates if the inverse time current limit is active.

INVERSE TIME OP	*PREF: 84.06*	*Default: —.00 %*	*Range: —.00 %*

This diagnostic indicates the present level of the inverse time current limit.

LOCAL CONTROL

This block allows the available modes of Local and Remote operation to be customised. It also indicates the selected mode.

You can only switch between Local and Remote modes using the Keypad. Refer to Chapter 8: “The Keypad” - The L/R Key.

Parameter Descriptions

SEQ MODES *PREF: 94.01* *Default: 0* *Range: See below*

Allows the source of sequencing commands to be selected. Local is the Keypad, Remote is an external signal. The modes supported are:

Enumerated Value : *Seq Mode*

0 : LOCAL/REMOTE
1 : LOCAL ONLY
2 : REMOTE ONLY

REF MODES *PREF: 94.02* *Default: 0* *Range: See below*

Allows the source of the reference signal to be selected. Local is the Keypad, Remote is an external signal. The modes supported are:

Enumerated Value : *Ref Mode*

0 : LOCAL/REMOTE
1 : LOCAL ONLY
2 : REMOTE ONLY

Parameter Descriptions

POWER UP MODE *PREF: 94.03* *Default: 1* *Range: See below*

Allows the power-up operating mode of the Drive to be selected. Local is the Keypad, Remote is an external signal, Automatic is the same mode as at power-down. The modes supported are:

Enumerated Value : *Power Up Mode*

0 : LOCAL
1 : REMOTE
2 : AUTOMATIC

SEQ DIRECTION *PREF: 94.04* *Default: FALSE* *Range: FALSE / TRUE*

When TRUE, direction is a Sequencing command.

When FALSE, direction is a Reference command.

REMOTE SEQ *PREF: 94.05* *Default: TRUE* *Range: FALSE / TRUE*

This parameter indicates the present source of the sequencing commands.

REMOTE REF *PREF: 94.06* *Default: TRUE* *Range: FALSE / TRUE*

This parameter indicates the present source of the reference signal.

MOT PMAC PROTECT

SETUP::MOTOR CONTROL::MOT PMAC PROTECT

Designed for PMAC Control Mode.

This is a motor protection based on the rms current flowing in the motor phases. This protection is called I2T and is based on the permanent current and thermal time constant.

The 100% permanent current is the following curve extracted from parameters in MOTOR PMAC 1 and 2 function block:

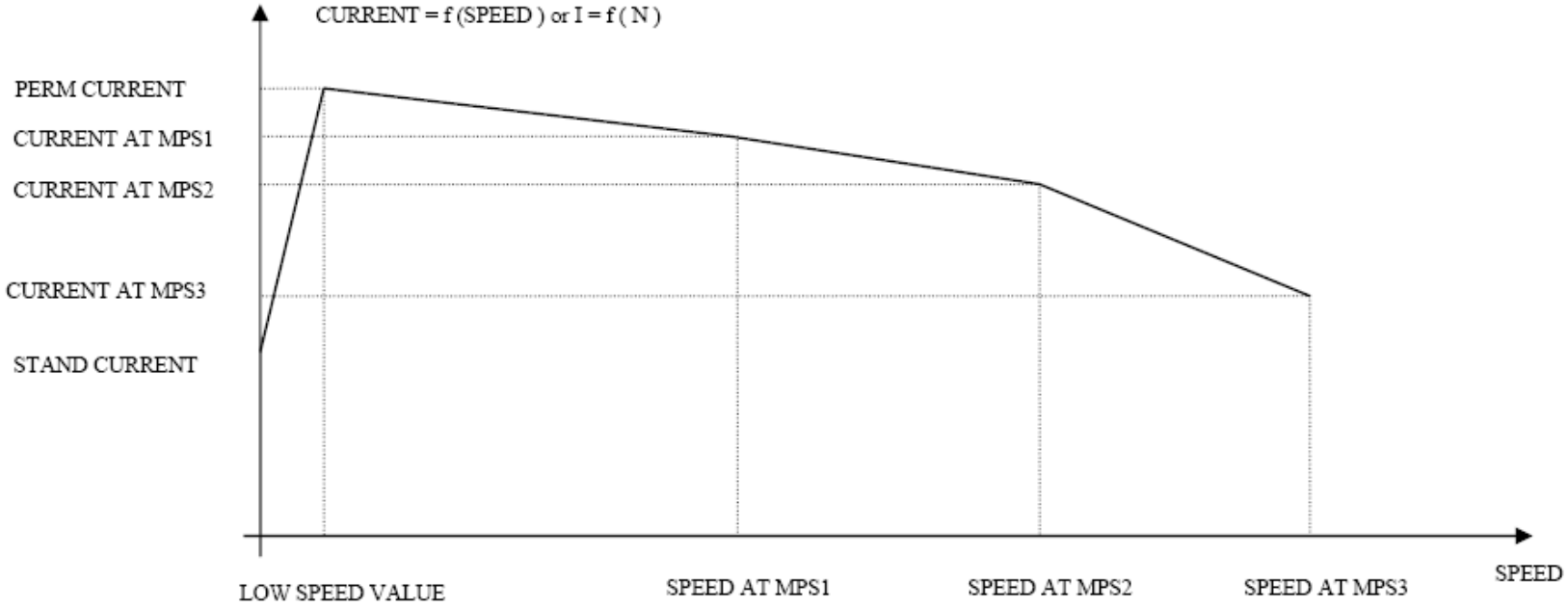

The rms motor current is filtered with a first order low pass filter based on the THERMAL TIME CST. The output I2T MOTOR LOAD of this filter is a percentage of the motor thermal load. When this output exceeds 100%, the drive trips in I2T MOTOR TRIP. The level of motor load (I2T MOTOR LOAD) is given as a percentage (100% represents a current equal to the PERM CURRRENT flowing in the motor phases for a THERMAL TIME CST time).

Parameter Descriptions

I2T INHIBIT *PREF: 161.01* *Default: FALSE* *Range: FALSE / TRUE*

This parameter enables/disables the I2T trip action. The drive continues to look for the motor load, but does not trip if the level is higher than 100%:

FALSE : I2T trip is enabled
TRUE : I2T trip is disabled.

I2T LIMIT MOTOR *PREF: 161.02* *Default:FALSE* *Range: FALSE / TRUE*

This diagnostic indicates the state of the motor current protection.

FALSE: the level of motor load is lower than 100%
TRUE : the level of motor load is higher than 100%

I2T MOTOR LOAD *PREF: 161.03* *Default: —.0 %* *Range: —.0 %*

This diagnostic indicates the percentage of thermal motor load.

This value is the output of the filter based on the THERMAL TIME CST and PERM CURRENT parameters of the MOTOR PMAC 1 Function Block. When this output exceeds 100%, the drive trips in I2T MOTOR TRIP.

MOTOR I2T TRIP *PREF: 161.04* *Default: FALSE* *Range: FALSE / TRUE*

This diagnostic reports on the state of the I2T motor trip:

FALSE : the motor is running, the level of the motor load is lower than 100% (if the trip is active)
TRUE : the drive has tripped, the level of motor load is higher than 100%

MOT POLARISATION

SETUP::MOTOR CONTROL::MOT POLARISATION

Designed for PMAC control mode

This function is used to set up and verify the relative position between the position sensor and the PMAC motor.

Parameter Descriptions

SWITCH ON START *PREF: 156.01* *Default: MANUAL* *Range: MANUAL*

Selects the method of starting the pole finding sequence. This parameter is automatically set to MANUAL (where the pole finding sequence is initiated by the POLAR START parameter).

POLARISATION *PREF: 156.02* *Default: DISABLE* *Range: DISABLE / ENABLE*

Set this parameter to ENABLE to enter the resolver calibration mode.

POLAR START *PREF: 156.03* *Default: FALSE* *Range: FALSE / TRUE*

Set this parameter to TRUE to start the calibration process (state only available if POLARISATION = ENABLE).

TYPE *PREF: 156.04* *Default: 1:STANDARD* *Range: 1:STANDARD*

Selects the type of pole finding method. This parameter is automatically set to STANDARD.

Enumerated Value : Type

0 : 1:STANDARD Method used by 99% of applications (motor must be free to rotate).

1:MOTOR PHASE *PREF: 156.05* *Default: U PHASE* *Range: See below*

Selects the position to polarise the motor when the TYPE parameter is set to STANDARD.

Enumerated Value : Motor Phase

0 : U PHASE = 90°
1 : V PHASE = -150° (or 210°)
2 : W PHASE = - 30° (or 330°)

Parameter Descriptions

1:MOT CUR PCNT *PREF: 156.06* *Default: 50.00* *Range: 0.00 to 100.00 %*

Sets the current level to apply (as a percentage of the permanent current of the motor) when the TYPE parameter is set to STANDARD.

1:MOT CUR RAMP *PREF: 156.07* *Default: 1.00* *Range: 0.10 to 20.00 s*

Sets the ramp value in seconds to apply to the current setpoint when the TYPE parameter is set to STANDARD..

ELEC POS OFFSET *PREF: 156.16* *Default:0.0000°* *Range: -180.0000° to 180.0000°*

An electrical position offset value that compensates for deviation from the theoretical value.

For example, if the value of the ELEC POS parameter is 100° and the theoretical value is 90° (MOTOR PHASE parameter set to U PHASE), you can apply a value of -10° to compensate for the deviation.

ELEC POS *PREF: 156.17* *Default:* *Range: -180.0000° to 180.0000°*

This diagnostic displays the electrical position of the motor in degrees.

CURRENT *PREF: 156.18* *Default:* *Range: —.0000 A*

This diagnostic shows the current value in Amps applied to the motor.

STATE *PREF: 156.19* *Default: 0* *Range: See below*

This diagnostic displays the state of the motor.

Enumerated Value :	*State*
0 : NORMAL	normal mode
1 : POLARIZING	the motor is under polarisation

Functional Description

The convention in the 890 drive is given below :

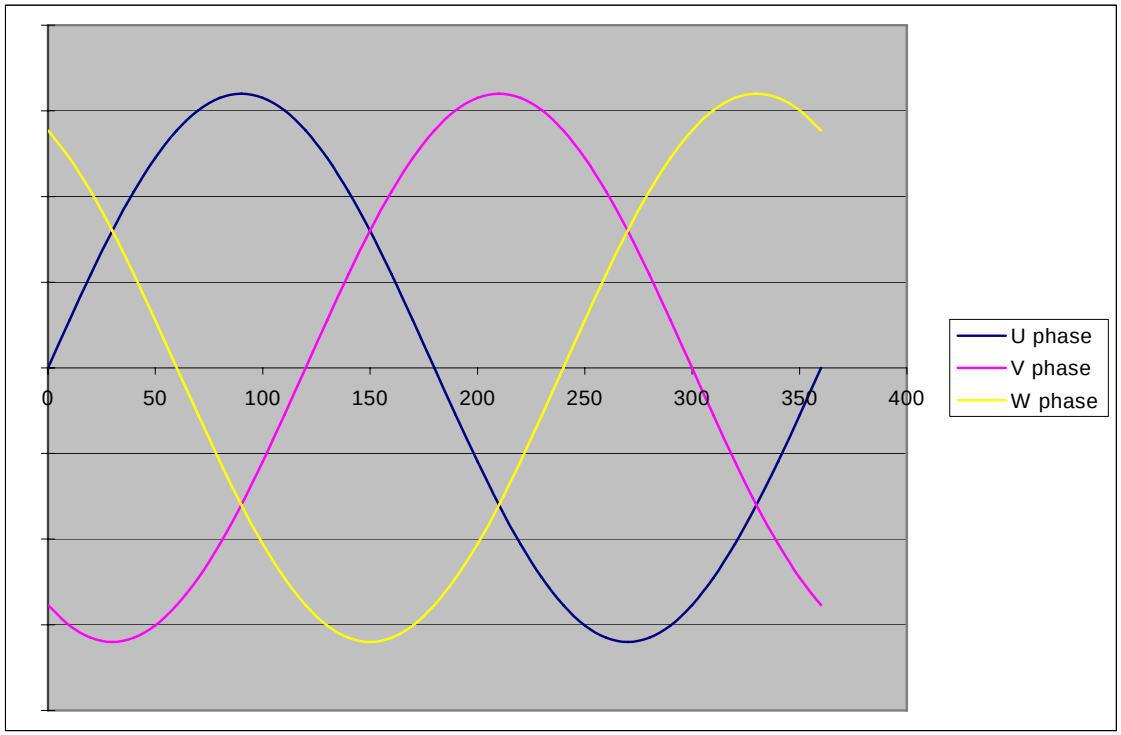

The correct succession of motor phases is U (or M1), V (or M2), W (or M3) if the motor rotates in a clockwise direction looking to the motor shaft on the front side. U phase must ride through the 0 point in a positive way at a position of 0° (electrical position). The position must also increase in that direction.

To polarise the motor, a current setpoint is ramped to the motor in a special configuration. This will cause the rotor to lock to a specific position.

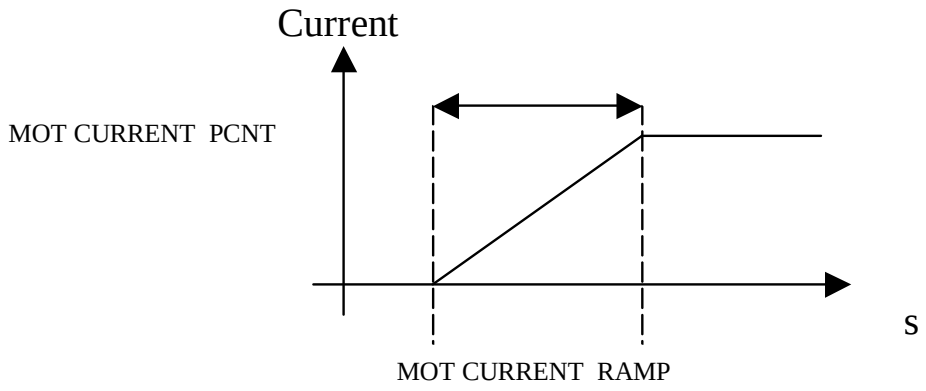

To start the STANDARD polarisation:

1. The motor must be stationary, with no load attached to the motor shaft. In this method, there will be a maximum movement of half an electrical turn of the motor shaft.
2. Choose a MOTOR PHASE: U, V or M.
3. Set the current level to apply in the MOT CURRENT PCNT parameter.
4. Set a ramp value for the current level in the MOT CURRENT RAMP parameter.
5. Set POLARISATION = ENABLE, POLAR START = FALSE.
6. Verify that ELEC POS OFFSET is set to 0.0.
7. Set POLAR START = TRUE.
8. Apply a torque to the motor and read the value of the ELEC POS parameter.
9. Stop the motor. Verify that the value of ELEC POS after polarisation matches the theoretical position for the chosen motor phase :
   - U or M1 : 90°
   - V or M2 : 210° (-150°)
   - W or M3 : 330° (-30°)

If not, apply a compensation using the ELEC POS OFFSET parameter. If necessary, repeat steps 6 and 7 until an error of only 1° to 5° is achieved.

Examples:
In U phase (90°), if ELEC POS = 20° then ELEC POS OFFSET must be set to 70° to get a value of 90° for ELEC POS.

In U phase (90°), if ELEC POS = -160° then ELEC POS OFFSET must be set to –110° (+250°) to get a value of 90° for ELEC POS. 90° is equivalent to –270°, which explains the value of –110° : -270° = -160° + (-110°).

10. Verify the correct value of ELEC POS parameter and set POLARISATION = DISABLE, POLAR START = FALSE.

This function could also be used to verify the correct connection of the motor phase (correct succession of the 3 phases) by :

1. Polarise the motor on the U phase with a low current, typically 20 to 30%, and a ramp value of 1 second.
2. Change the phase to V, then W, etc. using the MOTOR PHASE parameter and apply torque to the motor:
   - If the motor is rotating in a clockwise direction, looking to the front shaft of the motor, then the motor phases are connected correctly. (With the encoder correctly wired, the encoder position will increment when the motor turns in a clockwise way looking to the front shaft of the motor)
   - If the motor is rotating in a counter clockwise direction, looking to the front shaft of the motor, two of the motor phases must be inverted, for example U and V phases.

MOTOR INDUCTION

SETUP::MOTOR CONTROL::MOTOR INDUCTION

Designed for all Motor Control Mode, except PMAC Control Mode.

In this function block you enter the details of the motor under control and any available motor nameplate information.

The Autotune feature will determine the MAG CURRENT, STATOR RES, LEAKAGE INDUC, MUTUAL INDUC and ROTOR TIME CONST motor model parameter.

The OVERLOAD parameter determines the allowed level of motor overload. This can be especially useful when operating with motors smaller than the drive rating.

Note ***Do not attempt to control motors whose rated current is less than 25% of the drive rated current. Poor motor control or Autotune problems may occur if you do.***

Parameter Descriptions

POWER *PREF: 27.02* *Default: 1.5 kW* *Range*: *0.00 to 3000.00kW*

This parameter contains the motor nameplate power.

*** BASE FREQUENCY** *PREF: 27.03* *Default: 50.0 Hz* *Range*: *7.5 to 1000.0Hz*

This parameter contains the motor nameplate base frequency. Refer to FLUXING, page D-52.

*** MOTOR VOLTAGE** *PREF: 27.04* *Default: 230.0 V* *Range: 0.0 to 575.0V*

This parameter contains the motor nameplate voltage at base frequency. Refer to **Error! Reference source not found.**, page D-**Error! Bookmark not defined.**.

MOTOR CURRENT *PREF: 27.05* *Default: 6.26 A* *Range: 0.00 to 3276.70 A*

This parameter contains the motor nameplate full-load line current.

MAG CURRENT *PREF: 27.06* *Default: 2.50 A* *Range*: *0.00 to 3276.70 A*

This parameter contains the motor model no-load line current as determined by the auto-tune.

Parameter Descriptions

*** NAMEPLATE RPM** *PREF: 27.07* *Default: 1420 rpm* *Range: 0.0 to 30000.0 rpm*

This parameter contains the motor nameplate full-load rated speed. This is the motor speed in rpm at base frequency minus full load slip.

*** MOTOR CONNECTION** *PREF: 27.08* *Default: 1* *Range: See below*

This parameter contains the motor nameplate winding connection.

Enumerated Value : *Motor Connection*

0 : DELTA
1 : STAR

MOTOR POLES *PREF: 27.09* *Default: 1* *Range: See below*

This parameter contains the motor nameplate pole-pairs.

Enumerated Value : *Motor Poles*

0 : 2 pole
1 : 4 pole
2 : 6 pole
3 : 8 pole
4 : 10 pole
5 : 12 pole

POWER FACTOR *PREF: 27.10* *Default: 0.71* *Range: 0.50 to 0.99*

This parameter contains the motor nameplate full-load power factor.

OVERLOAD *PREF: 27.11* *Default: 2.0* *Range*: *1.0 to 5.0*

This parameter contains the allowable motor overload factor. It is used to match the drive current measurement range to the motor. The drive is set up so that the **Motor Current x Overload** can be measured up to a maximum of 2 x the Drive constant torque current rating.

The OVERLOAD parameter has no effect on the current, inverse time or torque limits.

Parameter Descriptions

TOTAL INERTIA	*PREF: 27.23*	*Default: 0.0000 kgm^2*	*Range: 0.0000 to 300.0000 kgm^2*

The total inertia of the motor and load. This is used as part of the speed loop Autotune feature.

STATOR RES	*PREF: 27.14*	*Default: 1.5907 Ω*	*Range: 0.0000 to 250.0000 Ω*

This parameter contains the motor model per-phase stator resistance as determined by Autotune.

LEAKAGE INDUC	*PREF: 27.15*	*Default: 33.76 mH*	*Range: 0.00 to 300.00 mH*

This parameter contains the motor model per-phase leakage inductance as determined by Autotune.

MUTUAL INDUC	*PREF: 27.16*	*Default: 135.02 mH*	*Range: 0.00 to 3000.00 mH*

This parameter contains the motor model per-phase mutual (magnetising) inductance as determined by Autotune.

ROTOR TIME CONST	*PREF: 27.17*	*Default: 136.75 ms*	*Range: 10.00 to 30000.00 ms*

This parameter contains the motor model rotor time constant as determined by Autotune.

MOTOR PMAC 1

SETUP::MOTOR CONTROL::MOTOR PMAC 1

Designed for PMAC Control Mode.

The MOTOR PMAC blocks (1 & 2) store all the parameters needed to run a PMAC Motor. These parameter values are entered automatically by the DSE 890 Configuration Tool when the tool is used to select the motor type.

In order for the drive to control the motor the parameters marked ● **MUST** be set.

Parameter Descriptions

MANUFACTURER *PREF: 134.01* *Default: PARVEX* *Range:*

Enter the motor manufacturer's name.

MODEL *PREF: 134.02* *Default: HS620EV* *Range:*

Enter the motor name.

● CONSTRUCTION *PREF: 134.03* *Default: 0* *Range: See below*

Select the motor's construction type.

Enumerated Value : *Construction*

0 : AXIS	Standard motor.
1 : SPINDLE	Spindle motor.
2 : TORQUE	Direct torque motor.

ATMOSPHERE *PREF: 134.04* *Default: 0* *Range: See below*

Select the motor's atmospheric details.

Enumerated Value : *Atmosphere*

0 : STANDARD	Standard motor.
1 : EXPLOSIVE	Motor built for explosive atmosphere (Ex).

Parameter Descriptions

MAX VOLTAGE	*PREF: 134.05*	*Default: 400.00*	*Range: 200.00 to 640.00 V*

Set the motor's maximum ac input voltage (in Volts rms).

THERM PROTECTION	*PREF: 134.06*	*Default: FALSE*	*Range: FALSE / TRUE*

Motor's thermal protection feature.

● **MAX SPEED**	*PREF: 134.07*	*Default: 4300*	*Range: 0 to INT MAX*

Set the motor's maximum mechanical speed (in rpm)

● **MAX CURRENT**	*PREF: 134.08*	*Default: 10.60*	*Range: 0.00 to 1024.00 A*

Set the motor's maximum rms current. This parameter is used to limit the current demand

● **PERM CURRENT**	*PREF: 134.09*	*Default: 4.90*	*Range: 0.00 to 1024.00 A*

Set the motor's permanent rms current. Permanent current at low speed (in Amp rms) or nominal current.

Refer to MOTOR CURRENT % in the FEEDBACKS function block. A value of 100% = PERM CURRENT.

● **PERM TORQUE**	*PREF: 134.10*	*Default: 6.40*	*Range: 0.00 to 30000.00 Nm*

Set the motor's permanent torque.

Refer to TORQUE FEEDBACK in the FEEDBACKS function block. A value of 100% = PERM TORQUE.

LOW SPEED VALUE	*PREF: 134.11*	*Default: 0*	*Range: 0 to INT MAX rpm*

Set the motor's low speed value (in rpm) below which the current must be reduced.

If this parameter is unknown, value must be set to 0 rpm.

Parameter Descriptions

● POLES *PREF: 134.12* *Default: 10* *Range: 0 to 400*

Set the number of motor poles, e.g. for a 4 pole motor enter "4".

● BACK EMF *PREF: 134.13* *Default: 85.6* *Range: 0.0 to 8192.0 V*

Set the motor's Back EMF phase to phase, rms value (Ke, Volts rms per 1000 rpm)

On a standard PMAC motor the following equation may be used to check that the BACK EMF value is approximately correct:

BACK EMF * MAX SPEED < AC Input voltage

● R *PREF: 134.14* *Default: 3.63* *Range: 0.00 to 50.00 Ω*

Set the motor's resistance, between phases at 25 °C. This parameter is used within the current loop.

● L *PREF: 134.17* *Default: 24.299* *Range: 0.000 to 1000.000 mH*

Set the motor's inductance at maximum current. This parameter is used within the current loop and is related to the overall proportional gain.

PHASE *PREF: 134.18* *Default: 0.00* *Range: 0.00 to 90.000 degrees*

Set the motor's phase shift advance at permanent current. If this parameter is unknown, value must be set to 0.

The current setpoint I is separated into two current setpoints Iq and Id, obeying the following rule :

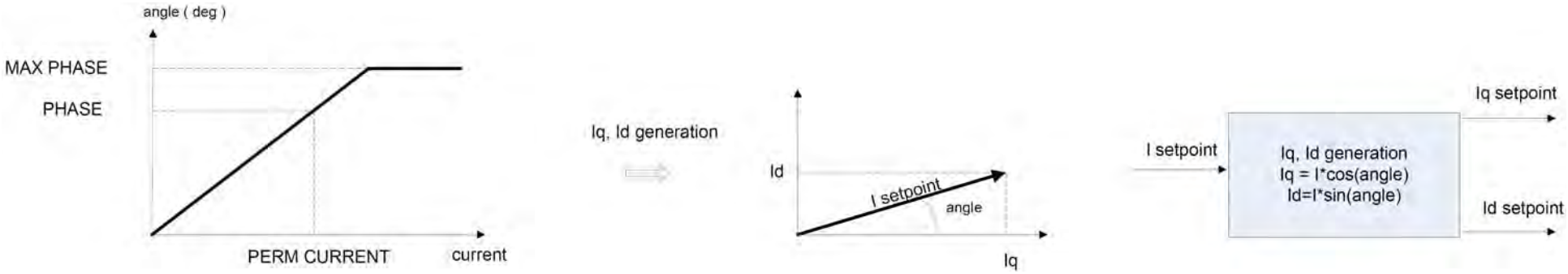

Parameter Descriptions

MAX PHASE *PREF: 134.19* *Default: 0.00* *Range: 0.00 to 90.000 degrees*

Set the motor's phase shift advance at maximum current. If this parameter is unknown, value must be set to 0.
The current setpoint I is separated into two current setpoints Iq and Id, obeying the following rule - see **PHASE** above.

MAX TORQUE *PREF: 134.20* *Default: 12.80* *Range: 0.00 to 30000.00 Nm*

Set the motor's torque at maximum current.

● KT *PREF: 134.21* *Default: 1.376* *Range: 0.0000 to 100.0000 Nm/A*

Torque constant (Kt, Nm/A rms).

This parameter is used to compute the current demand given a torque demand :

Current demand = Torque demand / KT

In order to have correct feedbacks the following equation MUST be true:

PERM TORQUE = KT * PERM CURRENT

On a PMAC motor, the ratio between the BACK EMF and the KT is always around 60:

BACK EMF (Volts rms/1000rpm) ≈ 60 * KT (Npm/Arms)

IFMB *PREF: 134.22* *Default: 0.0* *Range: -100.0000 to 100.0000A/Nm^3*

Set the motor's parameters to compute current setpoint from torque setpoint.

$$[current]=[torque]/KT+[torque]^3*IFMB$$

If IFMB is unknown, the value must be set to 0.

Parameter Descriptions

INERTIA *PREF: 134.23* *Default: 0.0010* *Range: 0.0000 to 100.0000*

Set the motor's inertia. The units for this parameter are set by the INERTIA SCALE parameter.

INERTIA SCALE *PREF: 134.24* *Default: 0* *Range: See below*

Set the motor's inertia scale.

Enumerated Value : *Inertia Scale*

0 : Kg*m²
1 : Kg*cm²
2 : g*m²

● STAND CURRENT *PREF: 134.26* *Default: 10.6* *Range: 0.00 to 1024.00 A*

Permanent current at standstill: if not known, set to the same value as PERM CURRENT at low speed

● THERMAL TIME CST *PREF: 134.27* *Default: 224.80* *Range: 0.00 to 10000.00 s*

Copper Thermal Time constant(s). If not known, set to 300s.

CUR LOOP BWDTH *PREF: 134.28* *Default: 600* *Range: 100 to 1500 Hz*

This parameter defines the current loop bandwidth. The value will automatically generate the proportional gain of the PI corrector of the current loop. The proportional gain is calculated based on the "L" motor parameter.

Modifying the CUR LOOP BWDTH value could induce instability. Please contact our application engineer if you need to change it.

INTEGRAL FREQ *PREF: 134.29* *Default: 150* *Range: 5 to 600 Hz*

This parameter defines the frequency of the Integral action of the PI corrector of the current loop.

Modifying this value could induce instability. Please contact our application engineer if you need to change it.

Functional Description

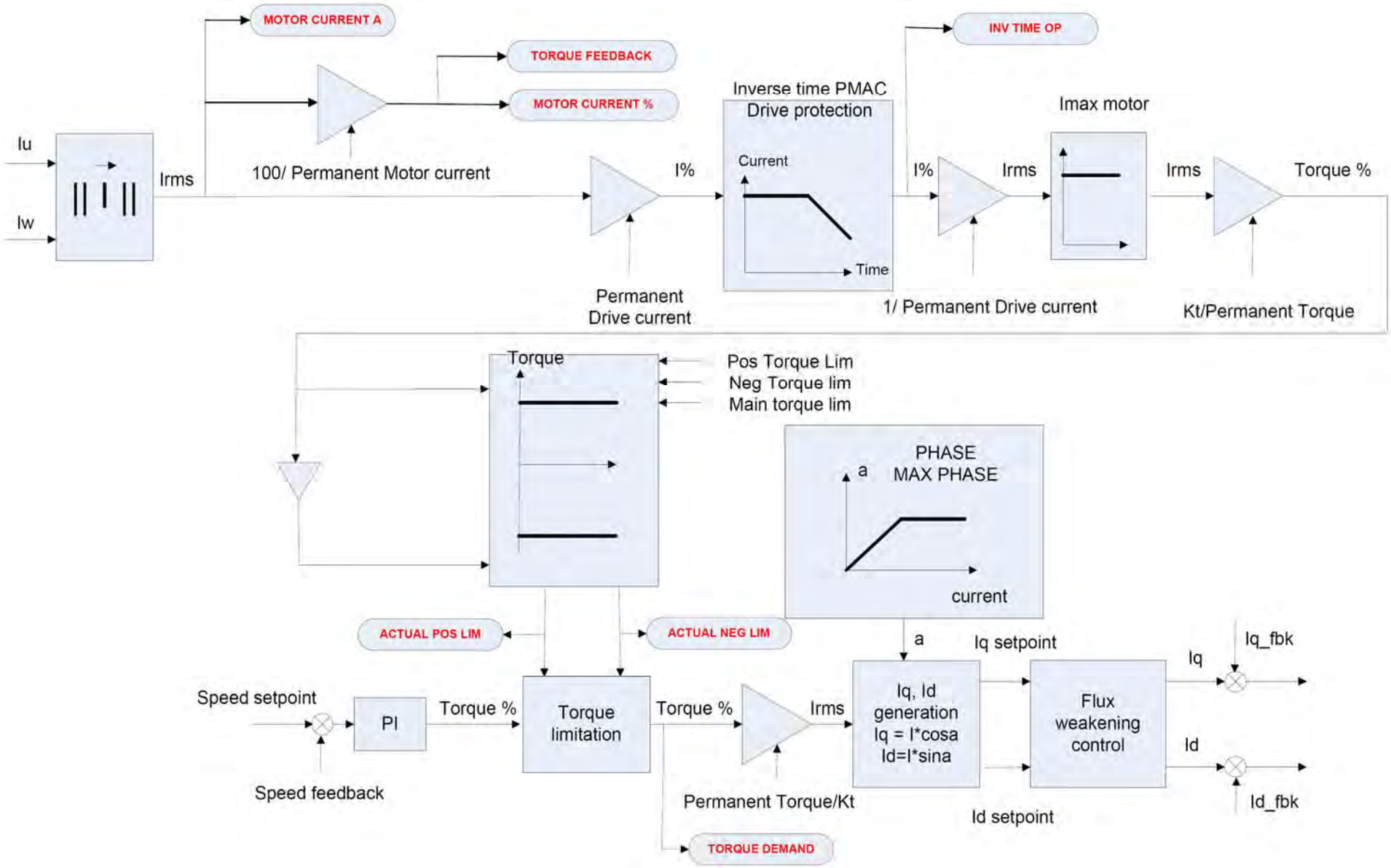

MOTOR PMAC 2

SETUP::MOTOR CONTROL::MOTOR PMAC 2

Designed for PMAC Control Mode.

The MOTOR PMAC blocks (1 & 2) store all the parameters needed to run a PMAC Motor. These parameter values are entered automatically by the DSE 890 Configuration Tool when the tool is used to select the motor type.

The parameters are used to vary the motor permanent current as a function of the speed and define the function used for the motor protection against overcurrent.

Parameter Descriptions

MPS1	*PREF: 135.01*	*Default: 230 V*	*Range:0 to 600 V*
MPS2	*PREF: 135.02*	*Default: 400 V*	*Range: 0 to 600 V*
MPS3	*PREF: 135.03*	*Default: 480 V*	*Range: 0 to 600 V*

These parameters define the waypoints on the motor's thermal protection curve. They represent AC input voltage (in Volts rms).

CURRENT AT MPS1	*PREF: 135.04*	*Default: 10.60 A*	*Range:0.00 to 1024.00 A*
CURRENT AT MPS2	*PREF: 135.05*	*Default: 10.60 A*	*Range:0.00 to 1024.00 A*
CURRENT AT MPS3	*PREF: 135.06*	*Default: 10.60 A*	*Range:0.00 to 1024.00 A*

These parameters define the rms current at the speed defined below.

SPEED AT MPS1	*PREF: 135.07*	*Default: 2300 rpm*	*Range:0 to 2147483647 rpm*
SPEED AT MPS2	*PREF: 135.08*	*Default: 4000 rpm*	*Range: 0 to 2147483647 rpm*
SPEED AT MPS3	*PREF: 135.09*	*Default: 4800 rpm*	*Range: 0 to 2147483647 rpm*

These parameters define the speed on the waypoint.

Functional Description

This block defines the parameters needed to build the following curve. It is used to limit the motor's current, depending on the speed.

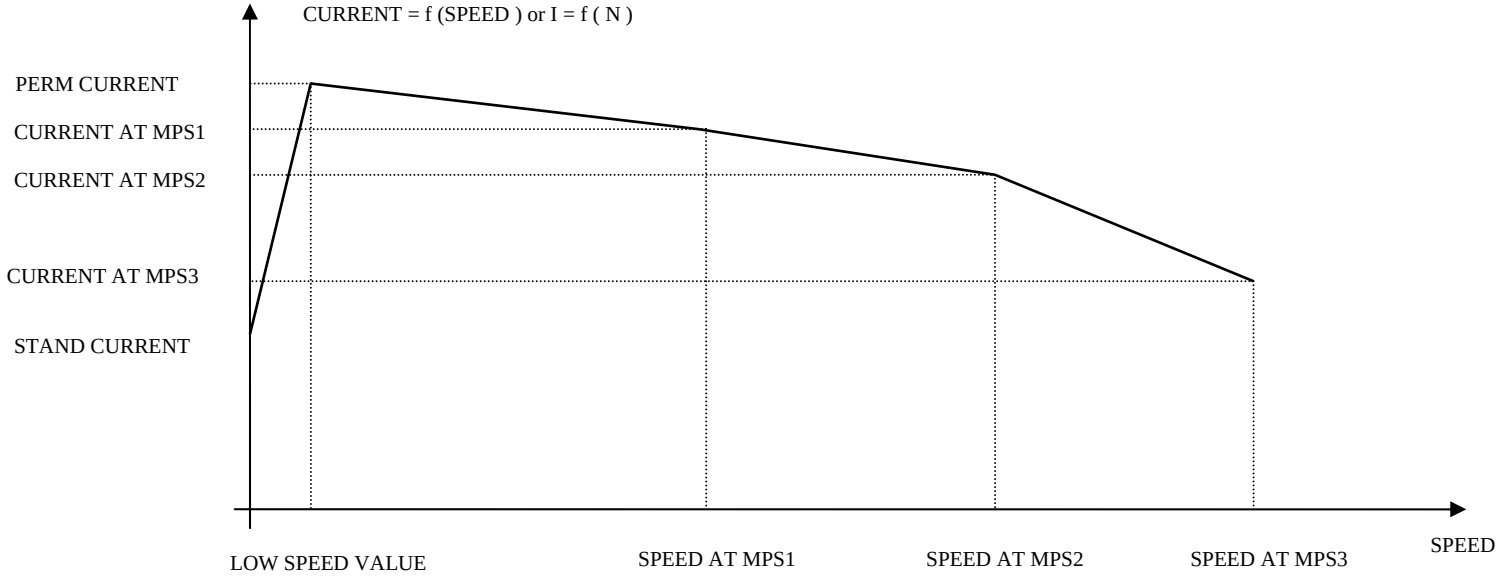

If the motor permanent current is defined as a constant on the whole range of use, the following parameters must be set to :

- MPS1 = MPS2 = MPS3 = AC input voltage (in Vrms)
- CURRENT AT MPS1 = CURRENT AT MPS2 = CURRENT AT MPS3 = PERM CURRENT from MOTOR PMAC 1 function block
- SPEED AT MPS1 = SPEED AT MPS2 = SPEED AT MPS3 = MAX SPEED from MOTOR PMAC 1 function block

MOVE TO MASTER

SETUP::PHASE CONTROL::MOVE TO MASTER

Performance Level = ADVANCED : CLOSED-LOOP VEC Motor Control Mode only.

The FireWire option card (Option B) must be fitted to the drive.

This block provides a command which when executed will start a trapezoidal move that aligns the load position with the Master Position + Total Offset. The Dist To Master is loaded such that there is a zero position error at the moment the position loop is enabled. This prevents the shaft moving when the position loop is enabled.

Parameter Descriptions

ENABLE *PREF: 124.01* *Default: FALSE* *Range: FALSE / TRUE*

This parameter commands the Move To Master function to start on positive edge.

MOVE METHOD *PREF: 124.02* *Default: 0* *Range: See below*

This parameter defines how the move will be performed, either Forwards, Backwards, or taking the Shortest distance.

Enumerated Value : *Move Method*

0 : SHORTEST
1 : FORWARD
2 : BACKWARD

DIRECTION BAND *PREF: 124.03* *Default: 0.05* *Range: 0.00 to 200.00*

This parameter defines the move distance for which the Shortest move will always be taken, overriding the Forward and Backward options of Move Method. This parameter is scaled such that 1.0 = 1 load mechanical revolution.

VELOCITY *PREF: 124.04* *Default: 1.00 %* *Range: 0.10 to 300.00 %*

This parameter defines the maximum velocity of the move, set in percent of maximum load speed.

ACCELERATION *PREF: 124.05* *Default: 1.00 %* *Range: 0.01 to 3000.00 %*

This parameter defines the maximum acceleration of the move, set in percent of maximum load speed per second.

Parameter Descriptions

DIST TO MASTER *PREF: 124.06* *Default: —.xxxx* *Range: —.xxxx*

This diagnostic displays the distance (1.0 = 1 load mechanical revolution) between the load shaft position and the Master Position + Total Offset position.

ACTIVE *PREF: 124.08* *Default: FALSE* *Range: FALSE / TRUE*

This diagnostic is TRUE to indicate Move to Master is active.

STATE *PREF: 124.09* *Default: 1* *Range: See below*

This diagnostic indicates the state of the Move to Master move.

Enumerated Value : *State*

0 : RESET	the move to master is in a reset state and cannot be used.
1 : READY	the move to master is ready to be enabled
2 : POS AQUIRE	the target position for the move is being acquired
3 : ALIGN	the move is active
4 : DONE	the move to master is complete

OP STATION

SETUP::MENUS::OP STATION

This block allows the operation of the Keypad control keys to be customised.

Parameter Descriptions

ENABLED KEYS *PREF: 30.01* *Default: 00F0* *Range:* 0x0000 to 0xFFFF

The following keys on the Keypad can be enabled or disabled separately. The combination produces the parameter setting as in the table below.

Parameter Setting	RUN	L/R	JOG	DIR
0000	-	-	-	-
0010	-	-	-	ENABLED
0020	-	-	ENABLED	-
0030	-	-	ENABLED	ENABLED
0040	-	ENABLED	-	-
0050	-	ENABLED	-	ENABLED
0060	-	ENABLED	ENABLED	-
0070	-	ENABLED	ENABLED	ENABLED
0080	ENABLED	-	-	-
0090	ENABLED	-	-	ENABLED
00A0	ENABLED	-	ENABLED	-
00B0	ENABLED	-	ENABLED	ENABLED
00C0	ENABLED	ENABLED	-	-
00D0	ENABLED	ENABLED	-	ENABLED
00E0	ENABLED	ENABLED	ENABLED	-
00F0	ENABLED	ENABLED	ENABLED	ENABLED

Parameter Descriptions

OP VERSION	*PREF: 30.02*	*Default:0000*	*Range: 0x0000 to 0xFFFF*

Displays the software version of the Keypad. It is cleared to 0x0000 if no Keypad is connected.

OP DATABASE	*PREF: 30.03*	*Default: FALSE*	*Range: FALSE / TRUE*

Reserved for Parker SSD Drives.

OPERATOR MENU

SETUP::MENUS::OPERATOR MENU

These function blocks, 1 to 32, are used to configure the Operator menu. This feature provides quick access to frequently used parameters. Any parameter may be “promoted” to the Operator menu, and the parameter is then automatically saved on power-down. In addition, parameters displayed in the Operator menu may be given a different name, and may be rescaled for display using the DISPLAY SCALE function blocks.

PREF 33.xx is OPERATOR MENU 1, PREF 34.xx is OPERATOR MENU 2, ….. PREF 64.xx is OPERATOR MENU 32.

Parameter Descriptions

PARAMETER *PREF: 33.01 to 64.01* *Default: 0* *Range: 0 to 5505*

Selects a parameter to be displayed in the Operator menu. Enter the correct PREF on the Keypad. Enter an equivalent decimal number when using LINK or comms link. To convert the required PREF to the decimal number, multiply the PREF whole number by 32. Then add the remainder of the PREF. For example: PREF 111.08 is equivalent to 3560 ((111 x 32) + 8). Only decimal numbers that are equivalent to the listed PREF numbers are acceptable.

NAME *PREF: 33.02 to 64.02* *Default:* *Range: max length is 16 chars*

Enter your customised parameter name, the maximum length is 16 characters. If this name is left blank, then default parameter name will be used.

SCALING *PREF: 33.03 to 64.03* *Default: NONE* *Range: Enumerated - see below*

Selects a DISPLAY SCALE function block to be applied to the value of PARAMETER.

Enumerated Value : Scaling

0 : NONE
1 : DISPLAY SCALE 1
2 : DISPLAY SCALE 2
3 : DISPLAY SCALE 3
4 : DISPLAY SCALE 4

Parameter Descriptions

READ ONLY	*PREF: 33.04 to 64.04*	*Default: FALSE*	*Range: FALSE / TRUE*

When TRUE, this entry in the Operator Menu will not be adjustable.

IGNORE PASSWORD	*PREF: 33.05 to 64.05*	*Default: FALSE*	*Range: FALSE / TRUE*

When TRUE, this entry in the Operator Menu may be adjusted regardless of the password protection feature.

OVER SPEED TRIP

SETUP::TRIPS::OVER SPEED TRIP

Designed for SENSORLESS VEC and CLOSED-LOOP VEC Motor Control Modes.

The over speed trip operates by looking at speed feedback and comparing it against THRESHOLD.

If the feedback exceeds this threshold for a period greater than DELAY, then a trip is triggered. The trip is only active while the drive is operating in Closed-Loop or Sensorless Vector Control.

Parameter Descriptions

INHIBIT	*PREF: 123.01*	*Default: FALSE*	*Range: FALSE / TRUE*

Set this parameter to TRUE to disable the over speed trip.

THRESHOLD	*PREF: 123.02*	*Default: 150.00 %*	*Range: 0.00 to 300.00 %*

Sets a threshold below which the trip will not operate. The value of THRESHOLD is compared to the value of SPEED FEEDBACK (from the SPEED LOOP function block).

DELAY	*PREF: 123.03*	*Default: 0.10 %*	*Range: 0.00 to 10.00 s*

Sets the time the trip must be present for before a trip is triggered.

TRIPPED	*PREF: 123.04*	*Default: FALSE*	*Range: FALSE / TRUE*

This is a diagnostic output indicating the current state of the over speed trip.

PATTERN GEN

SETUP::MOTOR CONTROL::PATTERN GEN

Designed for all Motor Control Modes.

The pattern generator function block allows you to configure the Drive PWM (Pulse Width Modulator) operation.

Parameter Descriptions

RANDOM PATTERN *PREF: 73.01* *Default: TRUE* *Range: FALSE / TRUE*

Designed for all Motor Control Modes, except PMAC Control Mode.

This parameter selects between random pattern (quiet motor noise) or the more conventional fixed carrier PWM strategies. When TRUE, random pattern is enabled.

FREQ SELECT *PREF: 73.02* *Default: 3000 Hz* *Range: 2000 to 6000 Hz*

For all motor control modes, except PMAC control mode:

This parameter selects the PWM switching frequency of the output power stack.

The higher the switching frequency, the lower the level of motor audible noise. However, this is only achieved at the expense of increased drive losses and reduced stack current rating.

For PMAC control mode (for test purposes):

This parameter selects the PWM switching frequency of the output power stack if the parameter PWM FREQ PMAC is set to ‘OTHERS’. The range is 2000 to 4000Hz.

DEFLUX DELAY *PREF: 73.03* *Default: 2.0 s* *Range: 0.1 to 10.0 s*

Designed for all Motor Control Modes, except PMAC Control Mode.

Sets the minimum allowed delay between disabling and then re-enabling PWM production (i.e.stopping and starting the drive).

DRIVE FREQUENCY *PREF: 73.04* *Default: —.xx Hz* *Range: —.xx Hz*

The output frequency provided to the motor.

Parameter Descriptions

ACTUAL PWM FREQ *PREF: 73.05* *Default: —. Hz* *Range: —. Hz*

The actual pwm switch frequency applied to the motor.

This can reduce in overload conditions in all Control Mode, except PMAC Control Mode.

PWM FREQ PMAC *PREF: 73.11* *Default: 0* *Range: See below*

This parameter defines the frequency of the PWM in PMAC Control mode

Enumerated Value : *PWM FREQ PMAC*

0 : 4 kHz
1 : 8 kHz
2 : OTHERS

The following restrictions apply to the switching frequency:

- For frames B to D, no restriction
- For all other frames the switching frequency is fixed at 4kHz

'OTHERS' is used in conjunction with the 'FREQ SELECT'parameter for test purposes only. It is effective only when used with an ENDAT encoder type, otherwise the switching frequency is fixed at 4kHz.

Functional Description

The Drive provides a unique quiet pattern PWM strategy in order to reduce audible motor noise. The user is able to select between the quite pattern or the more conventional fixed carrier frequency method. With the quiet pattern strategy selected (random pattern enabled), audible motor noise is reduced to a dull hiss.

In addition, the user is able to select the PWM carrier frequency. This is the main switching frequency of the power output stage of the Drive. A high setting of carrier frequency (e.g. 6kHz) reduces audible motor noise but only at the expense of higher Drive losses and smooth motor rotation at low output frequencies. A low setting of carrier frequency (e.g. 3kHz), reduces Drive losses but increases audible motor noise.

PHASE INCH

SETUP::PHASE CONTROL::PHASE INCH

CLOSED-LOOP VEC Motor Control Mode only.

Used with the external registration controller to advance/retard the Load reference position with respect to the Master position.

Parameter Descriptions

ADVANCE *PREF: 108.01* *Default: FALSE* *Range: FALSE / TRUE*

Command to Inch the load forwards. While TRUE, counts are added to the error calculator at a rate given by RATE. Note: if both ADVANCE and RETARD are TRUE then no action is taken.

RETARD *PREF: 108.02* *Default: FALSE* *Range: FALSE / TRUE*

Command to Inch the load backwards. While TRUE, counts are subtracted from the error calculator at a rate given by RATE.

RESET *PREF: 108.09* *Default: FALSE* *Range: FALSE / TRUE*

This parameter, when TRUE, resets the Inch Offset to zero. The block may only be reset while the position loop is not operating.

RATE *PREF: 108.03* *Default: 0.1000* *Range: 0.0001 to 30.0000*

Speed of the Inch in load rev/s and the rate at which counts are added to the error calculator. A rate of 0.05 with a system scaled in revolutions would cause the drive to advance at a rate of 0.05 revolutions a second with respect to the master.

RATE SCALE *PREF: 108.08* *Default: 1.000* *Range: 0.001 to 30.000*

Gain applied to Rate to allow fine control of Inch Rate. This allows fine control over the inch rate by scaling the value of RATE. Actual Rate = RATE x RATE SCALE

OFFSET *PREF: 108.10* *Default: —.xxxx* *Range: —.xxxx*

This diagnostic shows the position offset generated by the block (1.0 = 1 load mechanical revolution). This output is persistent.

ACTIVE *PREF: 108.04* *Default: FALSE* *Range: FALSE / TRUE*

This diagnostic display True while Advance or Retard actions are active.

Functional Description

When in Phase control, the Phase Inch function block may be used to advance or retard the relative position on the slave axis with respect to the master axis. This is achieved by feeding extra counts into the position calculator at a rate given by RATE in units per second.

ADVANCE and RETARD are usually linked to operator controlled, momentary-action push buttons

PHASE MOVE

SETUP::PHASE CONTROL::PHASE MOVE

Performance Level = ADVANCED : CLOSED-LOOP VEC Motor Control Mode only.

The FireWire option card (Option B) must be fitted to the drive.

This function block uses a position loop to stop the drive in a set distance. The distance is set in revolutions based on the number of lines on the encoder, usually from a mark at a fixed distance from the home position.

For accurate positioning the drive must be in Closed Loop Vector mode, if the drive is in any other mode then an open loop home algorithm will be used.

Parameter Descriptions

ENABLE *PREF: 109.01* *Default: FALSE* *Range: FALSE / TRUE*

If the function block is not already Active, ENABLE starts the Move operation when going from FALSE to TRUE. Setting ENABLE to FALSE while a move is active will **NOT** abort the operation.

HOLD *PREF: 109.08* *Default: FALSE* *Range: FALSE / TRUE*

Command to hold the current move. (In this state a new move may be triggered, replacing the held move)

RESET *PREF: 109.11* *Default: FALSE* *Range: FALSE / TRUE*

When True, this input aborts the current Move, and if the position loop is not operating, resets the Offset to zero.

DISTANCE *PREF: 109.02* *Default: 1.0* *Range: -3000.0 to 3000.0*

Sets the homing distance in revolutions, a revolution calculated from the number of lines on the encoder and maximum speed.

DISTANCE FINE *PREF: 109.03* *Default: 0.0000* *Range: -1.0000 to 1.0000*

Fine adjustment of homing distance. The actual homing distance is the sum of DISTANCE and DISTANCE FINE.

VELOCITY *PREF: 109.04* *Default: 1.00 %* *Range: 0.10 to 300.00 %*

The maximum velocity at which the distance is added to the phase loop, set in units per second.

Parameter Descriptions

ACCELERATION	*PREF: 109.07*	*Default: 1.00 %*	*Range: 0.01 to 300.00 %*

The acceleration at which the distance is added to the phase loop, set in units per second^2.

ACTIVE	*PREF: 109.05*	*Default: FALSE*	*Range: FALSE / TRUE*

Active is set TRUE whenever the block is enable, i.e. the move distance is none zero..

DISTANCE LEFT	*PREF: 109.06*	*Default: —.xx*	*Range: —.xx*

A diagnostic showing the distance remaining before the move is complete.

OFFSET	*PREF: 109.10*	*Default: —.xxxx*	*Range: —.xxxx*

This diagnostic shows the total position offset generated by the move block. (1.0 = 1 load mechanical revolution)

Functional Description

This is a simple trapezoidal relative move function, which acts on each rising edge of the Enable input. The slave shaft is moved a fixed distance at a rate given by the VELOCITY parameter. A move must be complete before a new move will be registered.

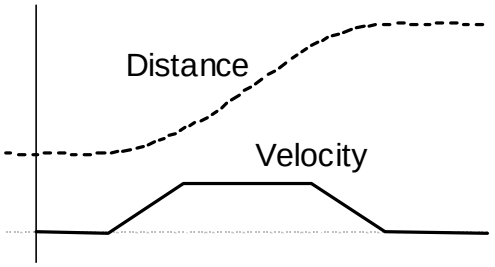

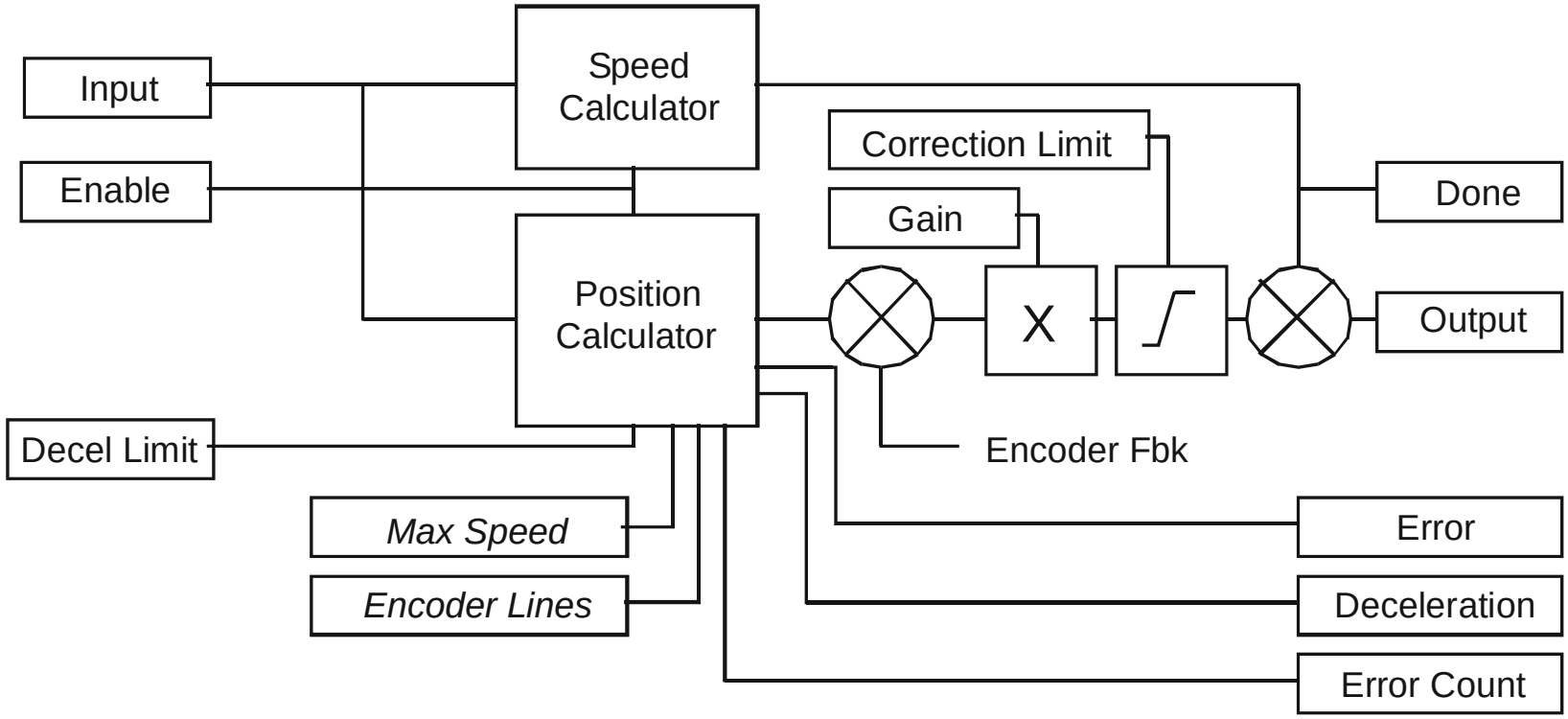
Input
Enable
Speed Calculator
Position Calculator
Correction Limit
Gain
X
Done
Output
Decel Limit
Encoder Fbk
Max Speed
Encoder Lines
Error
Deceleration
Error Count

PHASE MOVE ABS

SETUP::PHASE CONTROL::PHASE MOVE ABS

Performance Level = ADVANCED : CLOSED-LOOP VEC Motor Control Mode only.

The FireWire option card (Option B) must be fitted to the drive.

This block provides a method to move to an absolute position. Once enabled this block provides the reference, disconnecting the remote/firewire reference, until either the drive is stopped or this block is reset. If the remote/firewire reference is non-zero on reset, the drive will accelerate to this reference on the system ramp.

Parameter Descriptions

ENABLE *PREF: 120.01* *Default: FALSE* *Range: FALSE / TRUE*

On a positive edge, this parameter commands the Move Abs function to start.

RESET *PREF: 120.02* *Default: FALSE* *Range: FALSE / TRUE*

With Enable false, a positive edge resets the Move Abs function releasing the position demand back to the Unsynchronised Position Demand.

MOVE METHOD *PREF: 120.03* *Default: 0* *Range: See below*

This parameter defines how the move will be performed, either Forwards, Backwards, or taking the Shortest distance.

Enumerated Value : *Move Method*

0 : SHORTEST
1 : FORWARD
2 : BACKWARD

DIRECTION BAND *PREF: 120.04* *Default: 0.05* *Range: 0.00 to 1.00*

This parameter defines the move distance for which the Shortest move will always be taken, overriding the Forward and Backward options of Move Method. This parameter is scaled such that 1.0 = 1 load mechanical revolution.

Parameter Descriptions

POSITION *PREF: 120.05* *Default: 0.0000* *Range: 0.0000 to 1.0000*

The absolute position demand (1.0 = 1 load mechanical revolution).

VELOCITY *PREF: 120.06* *Default: 1.00 %* *Range: 0.10 to 300.00 %*

This parameter defines the maximum velocity of the move, set in percent of maximum load speed.

ACCELERATION *PREF: 120.07* *Default: 1.00 %* *Range: 0.01 to 3000.00 %*

This parameter defines the maximum acceleration of the move, set in percent of maximum load speed per second.

ABS POSITION *PREF: 120.08* *Default: —.xxxx* *Range: —.xxxx*

This diagnostic displays the absolute position feedback (1.0 = 1 load mechanical revolution).

ACTIVE *PREF: 120.10* *Default: FALSE* *Range: FALSE / TRUE*

This diagnostic is TRUE to indicate Move Abs is active (i.e. the position demand is being provided by this block)

DONE *PREF: 120.11* *Default: FALSE* *Range: FALSE / TRUE*

This diagnostic is TRUE to indicate the last Move Abs enabled has completed.

STATE *PREF: 120.12* *Default: 1* *Range: See below*

This diagnostic indicates the state of the Move Abs move.

Enumerated Value : *State*

0 : RESET	the move to master is in a reset state and cannot be used.
1 : READY	the move Abs is ready to be enabled
2 : POS AQUIRE	the target position for the move is being acquired
3 : ALIGN	the move is active
4 : DONE	the move Abs is complete

PHASE OFFSET

SETUP::PHASE CONTROL::PHASE OFFSET

CLOSED-LOOP VEC Motor Control Mode only.

Provides an unramped position Offset of the Master reference position with respect to the Load position, or an unramped speed Offset to the Master reference speed.

Phase Output = Error + Offset + Offset Fine

Parameter Descriptions

OFFSET *PREF: 110.01* *Default: 0.0* *Range: -3000.0 to 3000.0*

A course offset added to the phase error allowing an absolute phase correction to be applied. The Offset is added to the phase at a maximum rate of ±32768 counts.

OFFSET FINE *PREF: 110.02* *Default: 0.0000* *Range: -1.0000 to 1.0000*

Additional correction added to OFFSET to allow fine control of position.

SPEED OFFSET *PREF: 110.04* *Default: 0.00 %* *Range: -300.00 to 300.00 %*

A speed offset added to the speed demand.

ACTIVE *PREF: 110.03* *Default: FALSE* *Range: FALSE / TRUE*

True while the offset count is being added.

PHASE TUNING

SETUP::PHASE CONTROL::PHASE TUNING

The Tuning function block provides a means of injecting a speed offset or a phase offset in a selected wave form to assist the tuning of the speed and phase loops. It would be unusual for both tests to be active together.

Parameter Descriptions

ENABLE PHASE *PREF: 111.04* *Default: FALSE* *Range: FALSE / TRUE*

Activates a test function to add a test signal to the position demand (phase offset).

ENABLE SPEED *PREF: 111.02* *Default: FALSE* *Range: FALSE / TRUE*

Activates a test function to add a test signal to the speed demand (speed offset).

REFERENCE TYPE *PREF: 111.08* *Default: 0* *Range: See below*

Type of tuning reference, either square, sine, or triangular wave.

Enumerated Value : *Type*

0 : SQUARE
1 : SINUSOIDAL
2 : TRIANGULAR

SPEED AMPLITUDE *PREF: 111.09* *Default: 0.1000 rev/s* *Range: 0.0000 to 100.0000 rev/s*

This parameter sets the amplitude of the test signal. The signal is symmetric. (i.e. for an amplitude of 1 % the test signal varies by +/- 1.0 %). In speed test mode, the unit of this parameter are load speed, in position test mode, the unit is percent of 1 load revolution.

POS'N AMPLITUDE *PREF: 111.16* *Default: 1.0000 deg* *Range: 0.0000 to 100.0000 deg*

This parameter sets the amplitude of the test signal. The signal is symmetric. (i.e. for an amplitude of 1 % the test signal varies by +/- 1.0 %). In speed test mode, the unit of this parameter are load speed, in position test mode, the unit is percent of 1 load revolution.

Parameter Descriptions

PERIOD *PREF: 111.01* *Default: 10.000 s* *Range: 0.001 to 30.000 s*

The wave form period in seconds.

ACTIVE *PREF: 111.06* *Default: FALSE* *Range: FALSE / TRUE*

Diagnostic. TRUE when either ENABLE SPEED or ENABLE PHASE are active.

RUN TR FUNC TEST *PREF: 111.12* *Default: FALSE* *Range: FALSE / TRUE*

Use this parameter to start the test. Wait until the motor is turning at steady speed, then set it to TRUE. When the test is finished it will be automatically returned to FALSE.

NO OF MEASRMENTS *PREF: 111.13* *Default: 100* *Range: 1 to 1000*

This parameter sets the number of times the pseudorandom torque sequence is applied to the motor. The sequence duration is typically around 2 seconds, the test will last for 2 seconds times the number of measurements set here. The results will normally be contaminated with noise. The more measurements are taken, the better the signal to noise ratio. Typically 100 to 1000 measurements will be required, depending on the complexity of the system.

TORQUE AMPLITUDE *PREF: 111.14* *Default: 10.00 %* *Range: 0.00 to 100.00 %*

Sets the amplitude of the pseudorandom torque pulses applied for the test. The larger the amplitude, the better the signal to noise ratio. However, the current loop must be operating in linear mode for the test to be valid, so do not choose an amplitude that would drive the current loop into saturation.

Parameter Descriptions

TRANS FUNC TYPE *PREF: 111.15* *Default: 1* *Range: See below*

(i.e. Transfer Function Type)

The normal mode of operation is OPEN LOOP TRANS FN. This adds a pseudorandom binary sequence of torque onto the torque demand signal. The resultant change in speed is measured, stored, and read out to a pc where it may be analysed, and the system transfer function determined.

Using this mode it is also possible to determine the closed loop speed loop transfer function, the open loop position loop transfer function, and the closed loop position loop transfer function.

However, it is also possible to measure the closed loop speed loop transfer function directly, by setting this parameter equal to SPEED TRANSFR FN.

Enumerated Value : *Type*

0 : SPEED TRANSFR FN
1 : OPEN LP TRANS FN

POSITION LOOP

SETUP::MOTOR CONTROL::POSITION LOOP

This block controls the position of the motor. It compares a position demand, with position feedback, and generates a speed demand dependent on the difference. Note that the function blocks Move to Master, Phase Inch, Phase Move, Phase Move Abs, etc. will not work if this block is not enabled (PREF 3879).

Parameter Descriptions

ENABLE	*PREF: 121.07*	*Default: FALSE*	*Range: FALSE / TRUE*

Set True to enable the position loop to operate.

PROP GAIN	*PREF: 121.01*	*Default: 10.0*	*Range:*

The position loop proportional gain.

INTEGRAL TIME	*PREF: 121.02*	*Default: 500.0 ms*	*Range:*

The position loop integral time constant.

INTEGRAL DEFEAT	*PREF: 121.03*	*Default: FALSE*	*Range:*

When TRUE, this parameter sets the position loop integral to 0.0 and prevents it from operating.

LIMIT	*PREF: 121.11*	*Default: 10.00 %*	*Range: 0.00 to 300.00 %*

This parameter sets a symmetric clamp as a percentage of maximum speed, to limit the maximum position loop output of the block (PID Output).

POSITION DEMAND	*PREF: 121.15*	*Default: —.xx deg*	*Range: —.xx deg*

This diagnostic shows the input position demand.

TOTAL OFFSET	*PREF: 121.14*	*Default: —.xxxx*	*Range: —.xxxx*

This diagnostic shows the total position offset from the phase control blocks, Phase Inch, Phase Move, Phase Offset & Phase Tuning.

Parameter Descriptions

OUTPUT	*PREF: 121.10*	*Default: —.xxxx Hz*	*Range: —.xxxx Hz*

This diagnostic shows the total output (PID Output + Spd Feedforward).

FOLLOWING ERROR	*PREF: 121.13*	*Default: —.xxxx deg*	*Range: —.xxxx deg*

This diagnostic shows the absolute maximum position loop error over a 1 second period.

LIMITING	*PREF: 121.12*	*Default: FALSE*	*Range: FALSE / TRUE*

This diagnostic is TRUE if the PID output has reached the Limit value.

PID OUTPUT	*PREF: 121.09*	*Default: —.xxxx Hz*	*Range: —.xxxx Hz*

This diagnostic shows the output of the position loop PI loop only.

SPD FEEDFORWARD	*PREF: 121.08*	*Default: —.xxxx Hz*	*Range: —.xxxx Hz*

This diagnostic shows the Speed Feedforward from other blocks, e.g. inertia compensation.

POSITN INTEGRAL	*PREF: 121.06*	*Default: —.xxxx deg*	*Range: —.xxxx deg*

This diagnostic shows the value of the position loop integral.

POSITION ERROR	*PREF: 121.05*	*Default: —.xxxx deg*	*Range: —.xxxx deg*

This diagnostic shows the instantaneous position error.

POSN LOOP RSPONS	*PREF: 121.04*	*Default: —.x ms*	*Range: —.x ms*

This diagnostic shows the nominal response time of the position loop.

Parameter Descriptions

MODE *PREF: 121.16* *Default: 0* *Range: See below*

This diagnostic shows the operating mode of the position loop. (Range: Enumerated – 0: DISABLED, 1: ENABLED, , 2: UNSYNCHRONISED, 3: SYNCHRONISED , 4: ABSOLUTE,.)

Enumerated Value :	*Mode*
0 : DISABLED	The position loop is disabled.
1 : ENABLED	The position loop is enabled, but not operating
2 : UNSYNCHRONISED	The position loop is operating, but this drive has not been synchronised to the master by a Move To Master operation
3 : SYNCHRONISED	The position loop is operating, and the drive has been synchronised to the master, by a Move To Master operation
4 : ABSOLUTE	The position loop is operating with demands from the Phase Move Abs block

Functional Description

The position error (position demand – position feedback) is calculated and processed by a proportional + integral (PI) controller. The output of the PI controller is a speed demand, which is passed directly to the speed loop block. (speed loop Speed Demand = position loop Output. Note that speed loop Phase Input = 0).

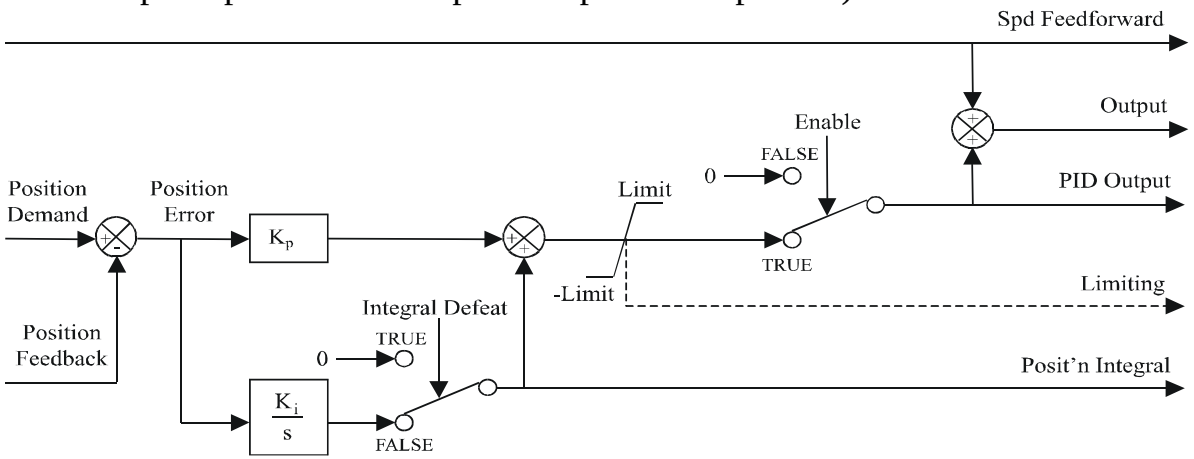

POWER LOSS CNTRL

SETUP::MOTOR CONTROL::POWER LOSS CNTRL

Designed for all Motor Control Modes.

This function block controls the behaviour of the drive during a power outage.

When enabled, the drive attempts to keep the dc link high by regeneratively recovering the kinetic energy in the motor load in the event of mains supply loss.

This is achieved by ramping the speed setpoint to zero during the power outage. If during the outage the supply returns, the speed setpoint is automatically ramped back to the speed setpoint.

When disabled, the drive will trip on UNDERVOLTS if the mains supply is removed.

Parameter Descriptions

ENABLE	*PREF: 112.01*	*Default: FALSE*	*Range: FALSE / TRUE*

When TRUE, the Power Loss Ride-Through functionality is enabled.

TRIP THRESHOLD	*PREF: 112.02*	*Default: 243V*	*Range: 0 to 1000 V*

Determines the dc link volts at which the Power Loss Ride-Through sequence is triggered.

CONTROL BAND	*PREF: 112.03*	*Default: 20 V*	*Range: 0 to 1000 V*

Sets the dc link voltage above the TRIP THRESHOLD at which the setpoint Ramp to Stop is paused. If the dc link volts remain above this level for a period greater than 500ms, the setpoint is ramped back to the speed demand.

ACCEL TIME	*PREF: 112.04*	*Default: 10.00 s*	*Range: 0.01 to 300.00 s*

Determines the time in which the speed setpoint is ramped back to the speed demand. This is expressed as the time to ramp from zero to MAX SPEED.

Parameter Descriptions

DECEL TIME	*PREF: 112.05*	*Default: 5.00 s*	*Range: 0.01 to 300.00 s*

Determines the time in which the speed setpoint is ramped to zero. This is expressed as the time to ramp from MAX SPEED to zero.

INITIAL STEP	*PREF: 112.08*	*Default: 0.00 %*	*Range: 0.00 to 100.00 %*

This parameter sets the initial speed reduction step at the start of the power loss control sequence.

TIME LIMIT	*PREF: 112.06*	*Default: 30.00 s*	*Range: 0.00 to 300.00 s*

Determines the maximum allowed time of the Power Loss Ride-Through sequence. Once timeout is reached, the drive is allowed to Coast to Stop and eventually trip on UNDERVOLTS.

PWR LOSS ACTIVE	*PREF: 112.07*	*Default: FALSE*	*Range: FALSE / TRUE*

This diagnostic is set to TRUE while the Power Loss Ride-Through sequence is active.

REFERENCE

SETUP::SEQ & REF::REFERENCE

This function block holds all the parameters concerning the generation of the setpoint reference (reference ramp, speed trim, setpoint reverse, etc.).

The generation of reference setpoint is described in Chapter 3 : “Product Overview” - Controlling the Drive.

Parameter Descriptions

REMOTE SETPOINT *PREF: 101.01* *Default: 0.00 %* *Range: -300.00 to 300.00 %*

This is the target reference that the Drive will ramp to in remote reference mode (not including trim), direction is taken from REMOTE REVERSE and the sign of REMOTE SETPOINT.

SPEED TRIM *PREF: 101.02* *Default: 0.00 %* *Range: -300.00 to 300.00 %*

The trim is added to the ramp output in remote mode (or if TRIM IN LOCAL is TRUE) to form SPEED DEMAND . The trim is typically connected to the output of a PID in a closed loop system.

Note ***The output of the REFERENCE RAMP is set to -SPEED TRIM when the drive is started to ensure that the SPEED DEMAND ramps from zero.***

MAX SPEED CLAMP *PREF: 101.03* *Default: 110.00 %* *Range: 0.00 to 110.00 %*

Maximum value for SPEED DEMAND.

MIN SPEED CLAMP *PREF: 101.04* *Default: -110.00 %* *Range: -110.00 to 0.00 %*

Minimum value for SPEED DEMAND.

TRIM IN LOCAL *PREF: 101.05* *Default: FALSE* *Range: FALSE / TRUE*

When TRUE, SPEED TRIM is always added to the ramp output. When FALSE, SPEED TRIM is added only to Remote mode.

REMOTE REVERSE *PREF: 101.06* *Default: FALSE* *Range: FALSE / TRUE*

Demanded direction when in Remote Reference mode. This is usually connected directly to the Sequencing Logic.

Parameter Descriptions

MAX SPEED *PREF: 101.08* *Default: 1500 rpm* *Range: 0 to 32000 rpm*

The maximum speed clamp and scale factor for other speed parameters. 100% speed = maximum speed in rpm.

SPEED DEMAND *PREF: 101.09* *Default: —.xx %* *Range: —.xx %*

Indicates actual speed demand to the Drive after reference ramp.

SPEED SETPOINT *PREF: 101.10* *Default: —.xx %* *Range: —.xx %*

Indicates target speed. This will be equal to either LOCAL SETPOINT, REMOTE SETPOINT, JOG SETPOINT, COMMS SETPOINT or FIREWIRE SETPOINT before reference ramp. (Refer to the REFERENCE JOG function block for the JOG SETPOINT parameter).

REVERSE *PREF: 101.11* *Default: FALSE* *Range: FALSE / TRUE*

Indicates demanded direction. This may not be the actual direction as no account of setpoint sign is taken.

LOCAL SETPOINT *PREF: 101.12* *Default: —.xx %* *Range: —.xx %*

Indicates the Keypad setpoint. It is always a positive quantity; saved on power down. Direction is taken from LOCAL REVERSE.

LOCAL REVERSE *PREF: 101.13* *Default: FALSE* *Range: FALSE / TRUE*

Indicates demanded direction in Local Reference mode, saved on power down.

COMMS SETPOINT *PREF: 101.14* *Default: 0.00 %* *Range: -300.00 to 300.00 %*

This setpoint is the target reference that the Drive will ramp to in Remote Reference Comms mode (not including trim). A positive value indicates a forward direction.

FWIRE SETPOINT *PREF: 101.15* *Default: —.xx %* *Range: —.xx %*

This diagnostic shows the Firewire Ref speed setpoint.

SPEED DEMAND *PREF: 101.16* *Default: —.x Hz* *Range: —.x Hz*

Indicates actual speed demand to the Drive after reference ramp.

Functional Description

Remote Reference

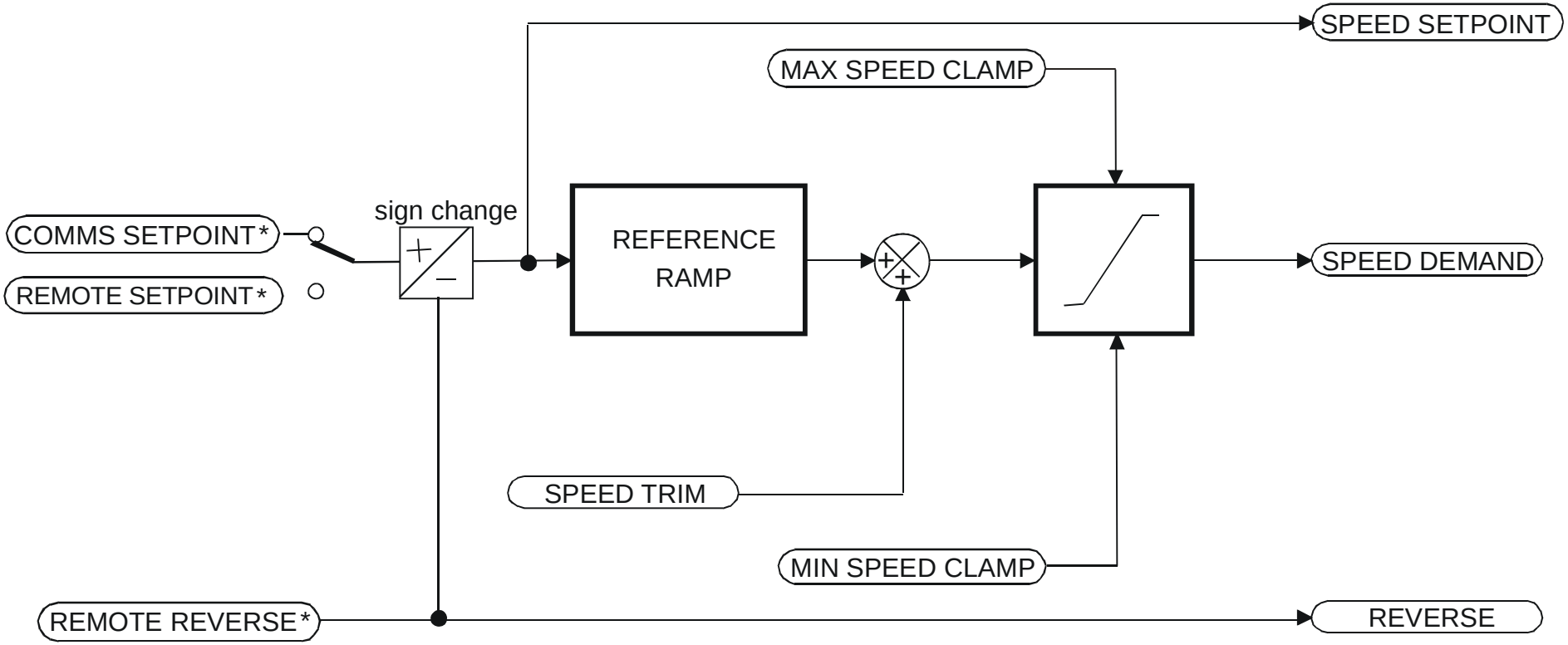

* REMOTE SETPOINT if Remote Reference Terminal mode
COMMS SETPOINT if Remote Reference Comms mode

(Mode is selectable in COMMS CONTROL block)

Local Reference

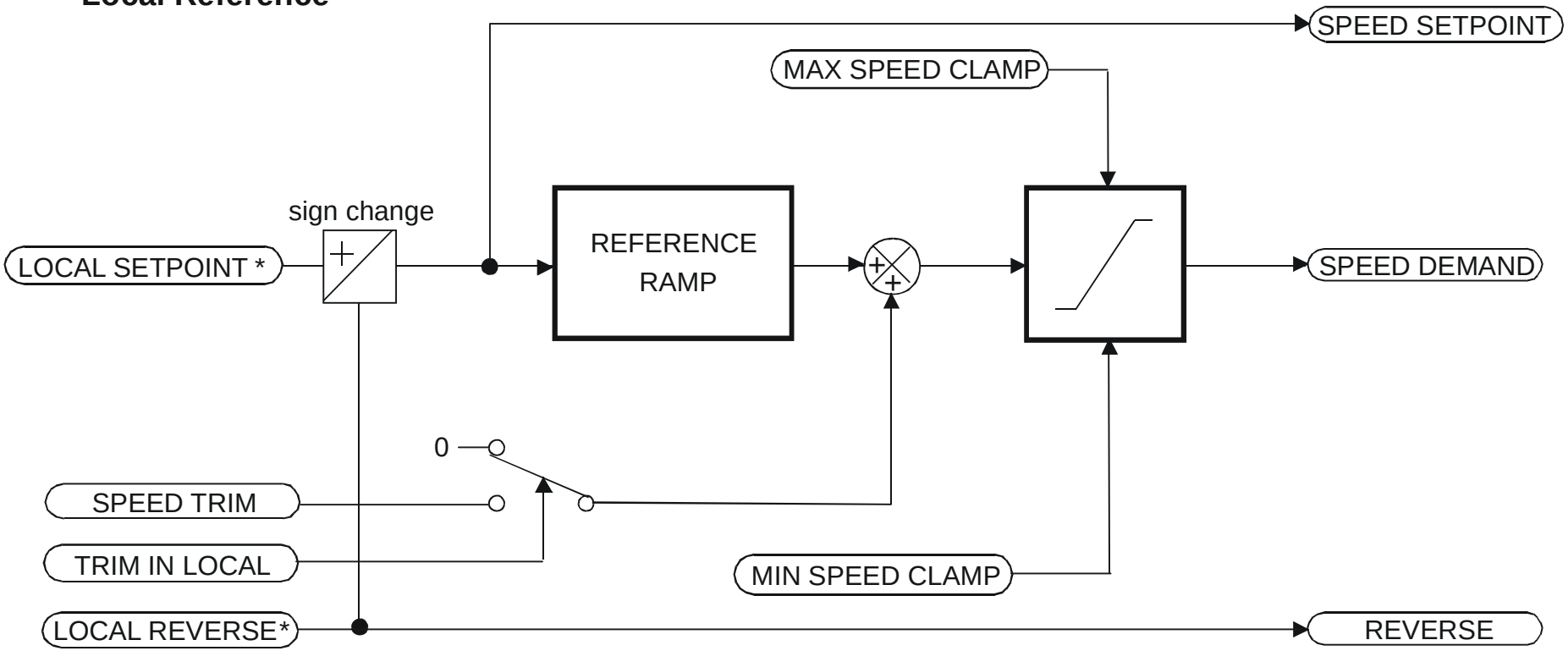

* Set only from the Keypad

REFERNCE ENCODER

SETUP::MOTOR CONTROL::REFERNCE ENCODER

This block is used to set up how the reference encoder input is obtained, via the Reference Encoder Speed Feedback Option Card. This option card can be fitted to the control board in either position, upper or lower. The drive must be capable of using the High Performance blocks found in the DSE 890 Configuration Tool.

Various encoder types may be selected (including pulse encoder, sincos encoder and absolute single-turn or multi-turn) and require different hardware options. If an encoder type is selected which does not match the hardware, an error will be flagged.

The reference encoder input will normally be used to make the drive precisely follow an external reference. This is done in conjunction with the VIRTUAL MASTER function block. The Firewire mode must first be selected. The parameter VIRTUAL MASTER :: SOURCE should be set to REFERNCE ENCODER. The virtual master output will then be equal to the reference encoder input.

Parameter Descriptions

PULSE ENC VOLTS *PREF: 158.01* *Default: 10.0 V* *Range: 10.0 to 20.0 V*

Set this approximately to the supply voltage required by the pulse encoder.

SINCOS ENC VOLTS *PREF: 158.22* *Default: 5.0 V* *Range: See below*

Used to set the supply volts required by the sin/cos encoder.

Enumerated Value : SinCos Encoder Volts

0 : 5V
1 : 10V

ENCODER LINES *PREF: 158.02* *Default: 2048* *Range: 250 to 262143*

The number of lines must be set to match the type of encoder being used. Incorrect setting of this parameter will result in an erroneous speed measurement.

Parameter Descriptions

ENCODER INVERT *PREF: 158.03* *Default: FALSE* *Range: FALSE/TRUE*

This parameter is used to switch the direction of the input encoder, forward or reverse.

ENCODER TYPE *PREF: 158.04* *Default: 0* *Range: See below*

This parameter defines the type of encoder being used.

Enumerated Value : Type	
0 : QUADRATURE	single-ended pulse encoder
1 : CLOCK/DIR	single-ended pulse encoder
2 : CLOCK	single-ended pulse encoder
3 : QUADRATURE DIFF	differential pulse encoder
4 : CLOCK/DIR DIFF	differential pulse encoder
5 : CLOCK DIFF	differential pulse encoder
6 : SINCOS INC	sin/cos encoder
7 : ABS ENDAT ST	single turn endat absolute encoder
8 : ABS ENDAT MT	multi-turn endat absolute encoder

Note that if an absolute endat encoder is used, the encoder MUST be wired exactly as specified. If not, it will fail to calibrate the absolute position and an error will result when the drive is started. This status can be viewed via the parameter CALIBRATN STATUS.

*** OUTPUT GBOX IN** *PREF: 158.05* *Default: 1* *Range: 1 to +2000000000*

See OUTPUT GBOX OUT below.

Parameter Descriptions

*** OUTPUT GBOX OUT** *PREF: 158.26* *Default: 1* *Range: -2000000000 to +2000000000*

These two parameters define the gearbox ratio between the motor and the load. For example, if a 3:2 gearbox is fitted between the motor and the load such that the motor turns through 3 revolutions for every 2 revolutions of the load, then set OUTPUT GBOX IN to 3, and set OUTPUT GBOX OUT to 2. The software will then keep track of the load position.

If the power is removed and then reapplied, it is possible for the drive to keep track of the load position even if the shaft has moved since the power was removed. This is only possible if the encoder is an absolute multi-turn. Otherwise, the load position will be set equal to the motor position on power-up.

ENCODER MECH O/S *PREF: 158.06* *Default: 0.0000 deg* *Range: 0.0000 to 360.0000 deg*

(Encoder mechanical offset). When using an absolute encoder, the SHAFT POSITION diagnostic shows the absolute position of the input encoder. The zero position can be adjusted by setting ENCODER MECH O/S. Locate the position which is required to be zero, and note the value of SHAFT POSITION. Enter this value into ENCODER MECH O/S to zero its position.

ENCODER FEEDBACK *PREF: 158.30* *Default: 0.00* *Range: —.xx RPM*

This parameter shows the mechanical speed of the motor shaft, calculated from the encoder feedback, in RPM.

SHAFT POSITION *PREF: 158.09* *Default: —.xx deg* *Range: —.xx deg*

This diagnostic provides the motor shaft position (before the gear box).

Parameter Descriptions

*** LOAD POSITION** *PREF: 158.10* *Default: —.xx deg* *Range: —.xx deg*

This diagnostic provides the motor load position (after the gear box).

** The output gearbox functions LOAD POSITION, OUTPUT GBOX IN and OUTPUT GBOX OUT are intended to apply to the feedback encoder, to allow the user to keep track of the speed and position of a load attached to the motor via a gearbox. It will not normally be applicable to the reference encoder. However, the parameters are included here because it is possible that the reference encoder may be derived from a motor with a gearbox. In this case it may be desirable to use the load position as the reference. These parameters will make it possible to do this.*

REV COUNT *PREF: 158.15* *Default: 0* *Range: —.*

This counts the number of turns of the encoder input. It will normally start from zero on power-up. If a multi-turn Endat encoder is fitted, REV COUNT will be made to match the multi-turn encoder rev count. However, it will continue to count beyond the Endat range of 0 to 4095 revs. It will count to the limits of a 32 bit number, but the lower 12 bits will be equal to the endat rev count.

CALIBRATN STATUS *PREF: 158.13* *Default: 0* *Range: see below*

If a sincos absolute Endat encoder is fitted (single-turn or multi-turn), the software will attempt to match the slow absolute position (Endat) information to the fast analog feedback information, to obtain a fast absolute position feedback. This will normally be done on power-up. If the encoder is wired correctly and working correctly, these should match. The CALIBRATN STATUS diagnostic will then display COMPLETED. If the encoder is not an absolute type, the diagnostic will show NOT REQUIRED. If calibration fails, this diagnostic will indicate where the problem may lie. Refer to CAL FAIL RETRY.

Enumerated Value : Type

0 : NOT REQUIRED
1 : DRIVE NOT STOP'D
2 : MOTOR NOT STOP'D
3 : ENDAT FAULT
4 : CAL IN PROGRESS
5 : ID PSN IN PRGRSS
6 : COMPLETED
7 : CALIBRATION LOST
8 : CALIBRATN FAILED

CAL FAIL RETRY *PREF: 158.24* *Default: FALSE* *Range: FALSE / TRUE*

The software will make a number of attempts to calibrate the absolute position (see CALIBRATN STATUS above) and then go into the CALIBRATN FAILED state. If the problem has been corrected, it is necessary to get it to try again. This can be done either by switching the drive on and off, changing a related parameter, or by setting CAL FAIL RETRY = TRUE. When the calibration is done, CAL FAIL RETRY will automatically be reset to FALSE.

LINE COUNT X4 *PREF: 158.31* *Default: 0* *Range: _*

Diagnostic showing the encoder line count times 4, i.e. each edge is counted. This diagnostic is set to 0 at power-up and reset when RESET LINE COUNT is TRUE.

RESET LINE COUNT *PREF: 158.23* *Default: FALSE* *Range: FALSE / TRUE*

If TRUE the LINE COUNT X4 diagnostic is reset.

Functional Description

A quadrature encoder uses 2 input signals (A and B), phase shifted by a quarter of a cycle (90°). Direction is obtained by looking at the combined state of A and B.

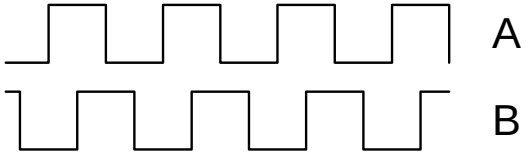

Speed is calculated using the following function:

$$\text{SPEED HZ} = \frac{\text{Counts Per Second}}{\text{Lines x 4}}$$

where counts per second are the number of edges received from the encoder. There are 4 counts per line.

REFERENCE JOG

SETUP::SEQ & REF::REFERENCE JOG

This block holds all the parameters that concern the Jog functionality on the Drive.

Parameter Descriptions

SETPOINT	*PREF: 103.01*	*Default: 10.00 %*	*Range: -100.00 to 100.00 %*
The setpoint is the target reference that the Drive will ramp to.			
ACCEL TIME	*PREF: 103.02*	*Default: 1.0 s*	*Range: 0.0 to 3000.0 s*
The time that the Drive will take to ramp the jog setpoint from 0.00% to 100.00%.			
DECEL TIME	*PREF: 103.03*	*Default: 1.0 s*	*Range: 0.0 to 3000.0 s*
The time that the Drive will take to ramp the jog setpoint from 100.00% to 0.00%.			

Functional Description

The REFERENCE JOG function block is used to configure the action of the Drive when used in jog mode. The various operating modes are described in more detail in Chapter 4 or 5: - The Start/Stop Mode Explained.

REFERENCE RAMP

SETUP::SEQ & REF::REFERENCE RAMP

This function block forms part of the reference generation. It provides the facility to control the rate at which the Drive will respond to a changing setpoint demand.

Parameter Descriptions

RAMP TYPE *PREF: 100.01* *Default: 0* *Range: See below*

Select the ramp type:

Enumerated Value : *Ramp Type*

0 : LINEAR
1 : S

ACCEL TIME *PREF: 100.02* *Default:* *Range: 0.0 to 3000.0 s*

The time that the Drive will take to ramp the setpoint from 0.00% to 100.00%.

DECEL TIME *PREF: 100.03* *Default:* *Range: 0.0 to 3000.0 s*

The time that the Drive will take to ramp the setpoint from 100.00% to 0.00%.

SYMMETRIC MODE *PREF: 100.04* *Default: FALSE* *Range: FALSE / TRUE*

Select whether to use the ACCEL TIME and DECEL TIME pair of ramp rates, or to use the SYMETRIC RATE parameter to define the ramp rate for the Drive.

SYMMETRIC TIME *PREF: 100.05* *Default: 10.0* *Range: 0.0 to 3000.0 s*

The time that the Drive will take to ramp from 0.00% to 100.00% and from 100.00% to 0.00% when SYMETRIC MODE is TRUE.

SRAMP CONTINUOUS *PREF: 100.06* *Default: TRUE* *Range: FALSE / TRUE*

When TRUE, and S ramp is selected in RAMP TYPE, forces a smooth transition if the speed setpoint is changed when ramping. The curve is controlled by the SRAMP ACCEL and SRAMP JERK 1 to SRAMP JERK 4 parameters. When FALSE, there is an immediate transition from the old curve to the new curve.

Parameter Descriptions

SRAMP ACCEL *PREF: 100.07* *Default: 10.0* *Range: 0.00 to 100.00 /s²*

Sets the acceleration rate in units of percent per second², i.e. if the full speed of the machine is 1.25m/s then the acceleration will be:

1.25 x 75.00% = 0.9375m/s²

SRAMP DECEL *PREF: 100.08* *Default: 10.0* *Range: 0.00 to 100.00 /s²*

This functions in the same way as SRAMP ACCEL above.

SRAMP JERK 1 *PREF: 100.09* *Default: 10.0* *Range: 0.00 to 100.00 /s³*

Rate of change of acceleration for the first segment of the curve in units of percent per second³, i.e. if the full speed of the machine is 1.25m/s then the jerk will be:

1.25 x 50.00% = 0.625m/s³

SRAMP JERK 2 *PREF: 100.10* *Default: 10.0* *Range: 0.00 to 100.00 /s³*

Rate of change of acceleration in units of percent per second³ for segment 2.

SRAMP JERK 3 *PREF: 100.11* *Default: 10.0* *Range: 0.00 to 100.00 /s³*

Rate of change of acceleration in units of percent per second³ for segment 3.

SRAMP JERK 4 *PREF: 100.12* *Default: 10.0* *Range: 0.00 to 100.00 /s³*

Rate of change of acceleration in units of percent per second³ for segment 4.

HOLD *PREF: 100.13* *Default: FALSE* *Range: FALSE / TRUE*

When TRUE the output of the ramp is held at its last value.

RAMPING *PREF: 100.14* *Default: FALSE* *Range: FALSE / TRUE*

Set TRUE when ramping.

Functional Description

Chapter 6: “Operating the Drive” - Starting and Stopping Methods, describes the use of the system ramp.

The ramp output takes the form shown below.

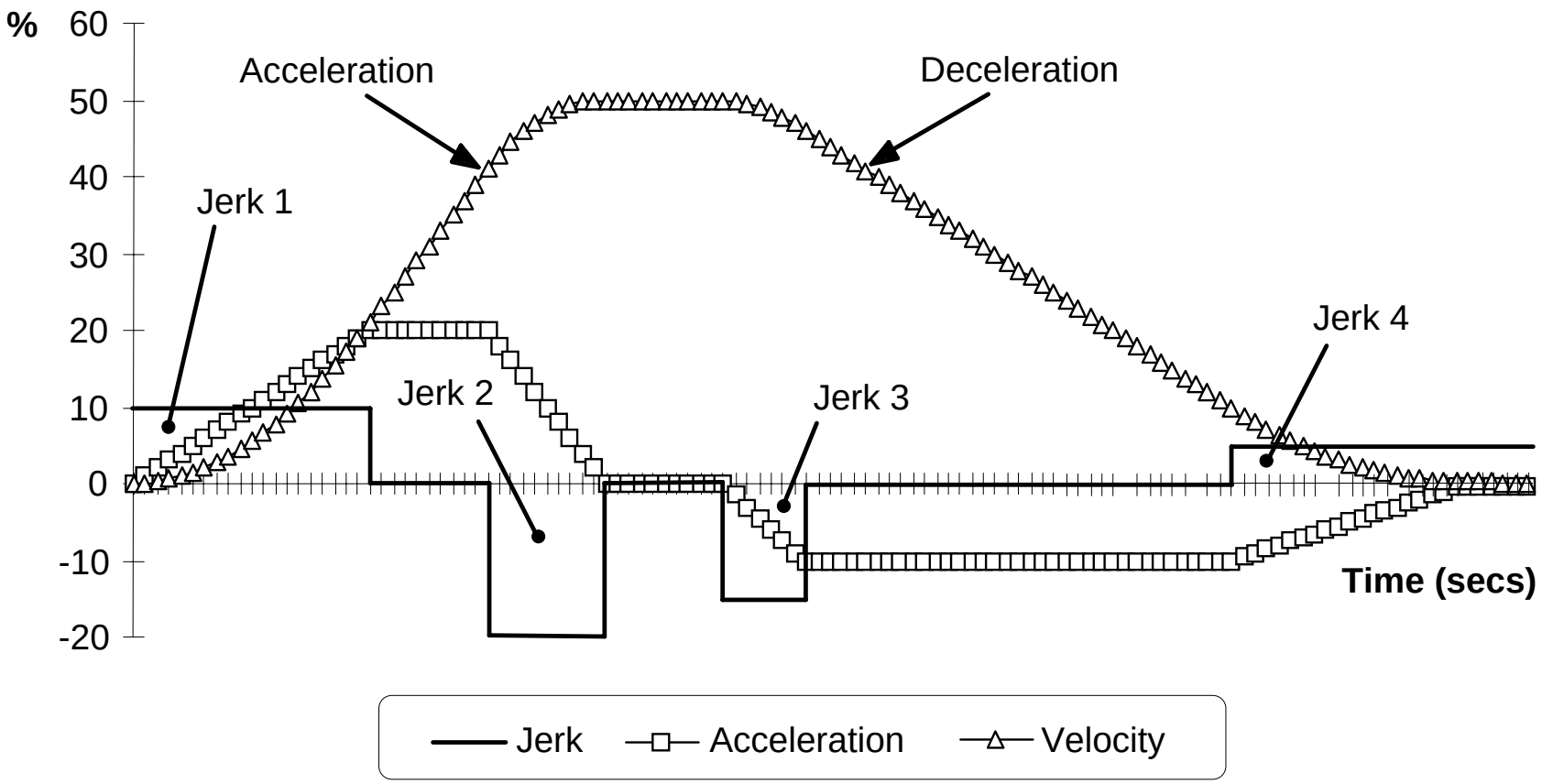

REFERENCE STOP

SETUP::SEQ & REF::REFERENCE STOP

This function block holds all the parameters concerning the stopping method of the Drive.

The stopping methods of the Drive are described in more detail in Chapter 6: “Operating the Drive” - Starting and Stopping Methods.

Parameter Descriptions

RUN STOP MODE *PREF: 102.01* *Default: 0* *Range: See below*

Selects stopping mode that the controller will use once the run command has been removed. The choices are:

Enumerated Value : *Stopping Mode*

0 : RUN RAMP
1 : COAST
2 : DC INJECTION (only Volts/Hz control mode)
3 : STOP RAMP

When RUN RAMP is selected the Drive will decelerate using the reference ramp deceleration time, provided it is non zero. When COAST is selected the motor will free-wheel. When DC INJECTION is selected the motor is stopped by applying dc current. When STOP RAMP is selected the motor will decelerate in STOP TIME.

STOP TIME *PREF: 102.02* *Default: 10.0 s* *Range: 0.0 to 600.0 s*

Rate at which the demand is ramped to zero after the ramp has been quenched.

STOP ZERO SPEED *PREF: 102.03* *Default: 0.10 %* *Range: 0.00 to 100.00 %*

Threshold for zero speed detection used by stop sequences.

STOP DELAY *PREF: 102.04* *Default: 0.500 s* *Range: 0.000 to 30.000 s*

Sets the time at which the Drive holds zero speed before quenching after a normal stop or a jog stop. This may be particularly useful if a mechanical brake requires time to operate at zero speed, or for jogging a machine to position.

Parameter Descriptions

FAST STOP MODE *PREF: 102.05* *Default: 0* *Range: See below*

Selects stopping mode used during a fast stop, two options ramped or coast.

Enumerated Value : *Stopping Mode*

0 : RAMPED
1 : COAST

FAST STOP LIMIT *PREF: 102.06* *Default: 30.0 s* *Range: 0.0 to 3000.0 s*

Maximum time that the Drive will try to Fast Stop, before quenching.

FAST STOP TIME *PREF: 102.07* *Default: 0.1 s* *Range: 0.0 to 600.0 s*

Rate at which the SPEED DEMAND is ramped to zero (see REFERENCE function block)

FINAL STOP RATE *PREF: 102.08* *Default: 1200 Hz/s* *Range: 1 to 4800 Hz/s*

Rate at which any internally generated setpoint trims are removed. For example, the trim due to the slip compensation in Volts/Hz control mode.

REGEN CONTROL

SETUP::MOTOR CONTROL::REGEN CNTRL

Designed for 4Q Regen Control Mode.

This function block is used to setup, sequence and monitor the operation of the drive when used in 4Q Regen Control Mode.

Parameter Descriptions

PRECHARGE CLOSED *PREF: 114.01* *Default: TRUE* *Range: FALSE / TRUE*

This parameter is used to indicate the external precharge contactor is closed, i.e. the external precharge resistor is no longer in circuit.

DC VOLTS DEMAND *PREF: 114.02* *Default: 720V* *Range: 0 to 1000V*

Use this to set the demanded dc link volts for the common dc bus. It must be set higher than the peak of the mains supply, but lower than the overvolts (820V on 400V products, 410V on 230V products).

BRAKE MODE *PREF: 114.15* *Default: FALSE* *Range: FALSE / TRUE*

Setting this parameter True allows the drive to generate energy into the mains in common dc link systems. The regeneration occurs when the dc link is higher than the DC VOLTS DEMAND level. In this mode the drive will not draw energy from the mains. The drive acts purely as a braking unit.

Id DEMAND *PREF: 114.07* *Default: 0.1* *Range: -1.5*

Use this parameter in AFE current control mode to set the per-unit (PU) current demand that is proportional to the drive active power.

Iq DEMAND *PREF: 114.18* *Default: 0.0* *Range: -1.5 to 1.5*

Use this parameter in AFE current control mode to set the per-unit (PU) current demand that is proportional to the drive reactive power.

MAX CURRENT *PREF: 114.19* *Default: 1.5* *Range: 0 to 1.5*

This parameter sets the current limit applied to the 4-Q Regen drive in AFE current control mode.

Parameter Descriptions

CURRENT CONTROL *PREF: 114.08* *Default: FALSE* *Range: FALSE / TRUE*

This parameter is used to designate if the drive is operating in a current control mode (TRUE), or in a closed-loop voltage control mode (FALSE).

HARDWARE SYNC *PREF: 114.25* *Default:FALSE* *Range:TRUE/FALSE*

This parameter is used to designate whether the drive is synchronised using 8902LS line sync option (TRUE), or a sensorless algorithm in software (FALSE).

SYNCHRONIZING *PREF: 114.09* *Default: FALSE* *Range: FALSE / TRUE*

This diagnostic reads True during the mains synchronisation period. This occurs when the drive is first run in 4Q Regen Control Mode. This synchronising period lasts for 100ms.

SYNCHRONIZED *PREF: 114.10* *Default: FALSE* *Range: FALSE / TRUE*

This diagnostic reads True when mains synchronisation has been successfully completed.

PHASE LOSS *PREF: 114.11* *Default: FALSE* *Range: FALSE / TRUE*

This diagnostic reads True if the drive suspects there is a missing input phase from the mains supply.

CLOSE PRECHARGE *PREF: 114.12* *Default: TRUE* *Range: FALSE / TRUE*

This diagnostic controls the operation of the external precharge contactor required by the 4Q Regen Control Mode.

ENABLE DRIVE *PREF: 114.13* *Default: FALSE* *Range: FALSE / TRUE*

This diagnostic is used to enable drives on a common dc link system supplied by a drive using the 4Q Regen Control Mode. The diagnostic reads True if mains synchronisation has been successful and the drive is Healthy.

Parameter Descriptions

STATUS *PREF: 114.14* *Default: 4* *Range: See below*

This diagnostic indicates the status of operation of the drive.

Enumerated Value : *Status*

0 : INACTIVE
1 : SYNCHRONIZING
2 : SYNCHRONIZED
3 : SUPPLY FREQ HIGH
4 : SUPPLY FREQ LOW
5 : SYNCH FAILED

INACTIVE : Indicates when the 4Q drive is not running

SYNCHRONIZING : Indicates during mains synchronisation period (first 100ms after Run command)

SYNCHRONIZED : Indicates successful synchronisation is complete

SUPPLY FREQ HIGH : Indicates 4Q drive output frequency is greater than 70Hz. This is a fault condition

SUPPLY FREQ LOW : Indicates the 4Q drive output frequency is less than 40Hz. This is a fault condition

SYNCH FAILED : Indicates the 4Q drive has failed to synchronise on to the mains supply. This is a fault condition

RESOLVER

SETUP::MOTOR CONTROL::RESOLVER

Designed for PMAC Control Mode.

This block defines the parameters used to set up the resolver.

Parameter Descriptions

NAME *PREF: 133.01* *Default: PARVEX* *Range:*

Set the resolver's name.

POLES *PREF: 133.02* *Default: 2* *Range: 2 to 20*

Set the resolver's number of poles. For a standard resolver, this number is 2.

When using an ENDAT encoder with a belt-pulley system on the feedback (typically PARVEX Torque motors), this parameter can be used to declare the ratio between the motor shaft and the encoder. The parameter named PULLEYBELT RATIO in this block can also be used to enter this ratio. Use either POLES or PULLEYBELT RATIO parameter.

For example :

ENCODER	RATIO	POLES
Resolver	Direct Mounting	2
ENDAT Encoder	Direct Mounting	2
	3:1	6
	6:1	12
	9:1	18

When using a resolver with a pulley belt, it is better to use the PULLEYBELT RATIO parameter in this block to enter the ratio

Parameter Descriptions

RATIO	*PREF: 133.03*	*Default: 0.5*	*Range:0.2 to 1.0*

Set the resolver's transformation ratio (at 8kHz, nominal carrier voltage).

SPEED MAX	*PREF: 133.04*	*Default: 10000*	*Range: 0 to 2147483647*

Set the resolver's maximum mechanical speed in RPM. If unknown, the value must be set to the motor maximum speed.

ACCURACY	*PREF: 133.05*	*Default: 20.00*	*Range: 0.00 to 60.00 minutes*

Set the resolver's peak to peak accuracy (in minutes). If unknown, use the default value.

CARRIER VOLTAGE	*PREF: 133.06*	*Default: 7.00*	*Range: 1.00 to 10.00V*

Set the resolver's nominal carrier rms voltage at 8kHz (in Volts). If unknown, use the default value.

CURRENT	*PREF: 133.07*	*Default: 0.046*	*Range: 0.000 to 1.000A*

Set the resolver's nominal carrier rms current at 8kz under nominal carrier voltage (in Amps). If unknown, use the default value.

INERTIA	*PREF: 133.08*	*Default: 24.00*	*Range: 10.00 to 32768.00Kg.cm2*

Set the resolver's rotor inertia (in kg*cm²). If unknown, use the default value.

POSITION SET UP	*PREF: 133.11*	*Default: 0.00*	*Range: -180.00 to 180.00 deg*

The electrical position offset value, in degrees. The value will adapt the resolver to the motor phasing (this parameter is automatically set up by using the MOT POLARISATION function block). The value could also be entered here if known.

RESOLVER POS OUT	*PREF: 133.15*	*Default:*	*Range: _.xxxx*

Mechanical position given by the resolver.

TRIP	*PREF: 133.16*	*Default: FALSE*	*Range: FALSE / TRUE*

This is a diagnostic output indicating a resolver trip:

TRIP = FALSE : resolver is OK

TRIP = TRUE : resolver is tripped

Parameter Descriptions

INIT DONE *PREF: 133.17* *Default: TRUE* *Range: FALSE / TRUE*

This is a diagnostic output indicating the state of the resolver init sequence:

INIT DONE = FALSE : init on going

INIT DONE = TRUE : init done

REVERSE CNT DIR *PREF: 133.18* *Default: FALSE* *Range: FALSE / TRUE*

Set the count direction for the resolver feedback.

REVERSE CNT DIR = FALSE : the position is increasing if the motor is running in a clockwise direction looking to the front shaft of the motor.

REVERSE CNT DIR = TRUE : the position is decreasing if the motor is running in a clockwise direction looking to the front shaft of the motor.

SPEED FILTER *PREF: 133.19* *Default: 100.00* *Range: 10.00 to 1000.00 Hz*

Set the low pass filter frequency in Hz on the resolver speed information.

Parameter Descriptions

PHASE SHIFT *PREF: 133.20* *Default: 0.00* *Range: 0.00 to 180.00°*

Set a phase shift in degrees between the carrier and the sin/cos signals coming from the resolver.

Carrier :

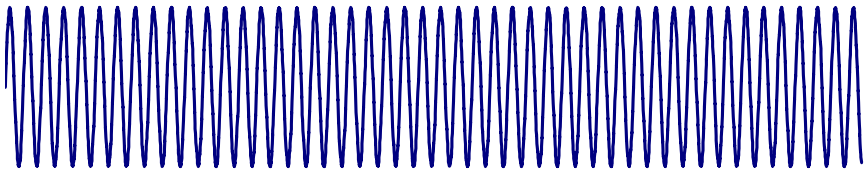

Sin/cos signals, motor in rotation :

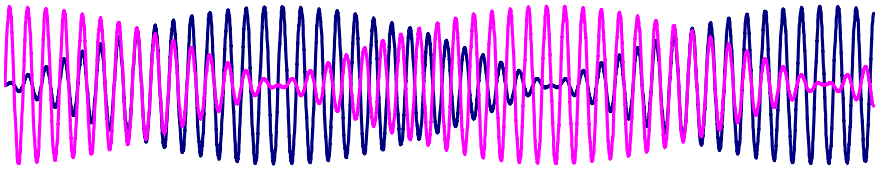

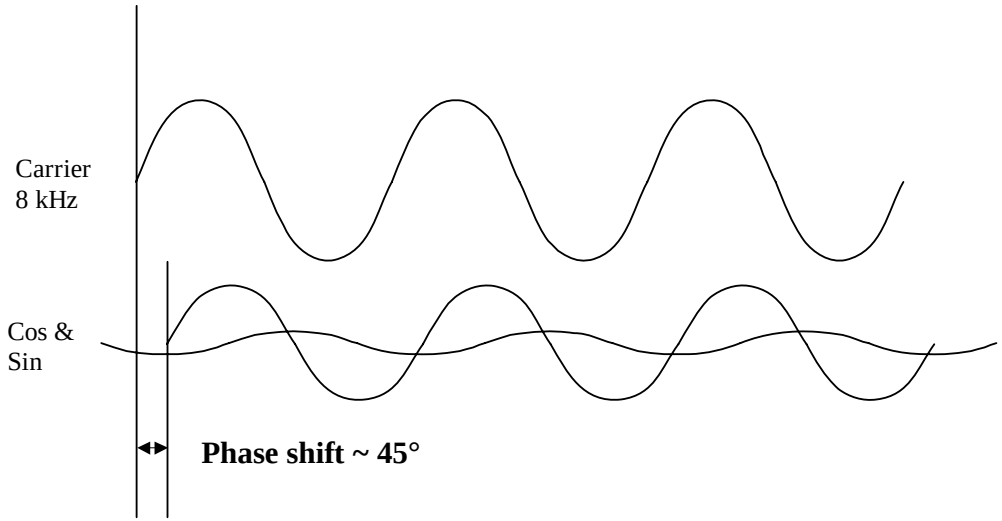

If unknown, use the default value.

Parameter Descriptions

TRIP SELECTION *PREF: 133.21* *Default: 2* *Range: See below*

Select the trip detection based on hardware and/or software detection:

Enumerated Value : Trip Selection

0 : HARD AND SOFT	The trip is based on hardware and software detection.
1 : HARD	The trip is only based on hardware detection.
2 : SOFT	The trip is only based on software detection.

Hardware Detection :

The trip is issued from the sine and cosine inputs, based on the following nominal values for the resolver :

CARRIER VOLTAGE : 7Vrms
RATIO : 0.5

Software Detection :

The trip is also issued from the sine and cosine inputs. The trigger value used is based on the following formula :

trip level = 0.15 *(CARRIER VOLTAGE * 0.1414 * RATIO * 2.0)

where

CARRIER VOLTAGE = 7Vrms, RATIO = 0.5 for a standard resolver
0.15 is the trigger value.

RESET LINE COUNT *PREF: 133.26* *Default: FALSE* *Range: FALSE / TRUE*

If TRUE the LINE COUNT X4 diagnostic is reset.

LINE COUNT X4 *PREF: 133.27* *Default: 0* *Range: _*

Diagnostic showing the resolver position with a resolution of 65536 points per resolver division. This diagnostic is set to 0 at power-up and reset when RESET LINE COUNT is TRUE.

PULLEYBELT RATIO *PREF: 133.28* *Default: 1* *Range: _1 to 100*

Set the ratio of Pulley Belt system between the encoder feedback and the motor shaft (Typically PARVEX Torque Motors) .

Can be used either for resolver or ENDAT encoder.

Default value is 1 (feedback mounted directly on the motor shaft)

SEQUENCING LOGIC

SETUP::SEQ & REF::SEQUENCING LOGIC

This function block contains all the parameters relating to the sequencing (start and stop) of the Drive.

Before the Drive will respond to the RUN FORWARD, RUN REVERSE or JOG parameters (cause the Drive to run or jog), the parameters DRIVE ENABLE, NOT FAST STOP and NOT COAST STOP need to be set to TRUE. In addition, the Drive needs to be healthy (HEALTHY is TRUE). The Drive will only respond to RUN FORWARD, RUN REVERSE and JOG if the Drive is in the Remote Sequencing mode.

If RUN FORWARD and RUN REVERSE are TRUE, both are ignored and the Drive will stop.

Parameter Descriptions

START DELAY *PREF: 92.25* *Default: 0.000 s* *Range: 0.000 to 30.000s*

Delays the action of "ramping to setpoint" from the Run command. This can allow a period for motor flux to establish before the ramp to setpoint.

RUN FORWARD *PREF: 92.01* *Default: FALSE* *Range: FALSE / TRUE*

Setting this parameter to TRUE causes the Drive to run in the forward direction.

RUN REVERSE *PREF: 92.02* *Default: FALSE* *Range: FALSE / TRUE*

Setting this parameter to TRUE causes the Drive to run in the reverse direction.

NOT STOP *PREF: 92.03* *Default: FALSE* *Range: FALSE / TRUE*

Setting this parameter TRUE will latch the RUN FORWARD or RUN REVERSE commands. Once latched, they can be reset to FALSE and the Drive will continue to run. Setting NOT STOP to FALSE causes the run commands to be unlatched.

JOG *PREF: 92.04* *Default: FALSE* *Range: FALSE / TRUE*

Setting this parameter TRUE causes the Drive to run at the speed set by JOG SETPOINT (refer to the REFERENCE JOG function block). Once jogging, setting JOG to FALSE causes the Drive to ramp to zero.

Parameter Descriptions

CONTACTOR CLOSED *PREF: 92.05* *Default: TRUE* *Range: FALSE / TRUE*

Feedback used to indicate that the external contactor has been closed. It must be TRUE for the sequencer to proceed from the SWITCHED ON state to the READY STATE, refer to SEQUENCER STATE.

DRIVE ENABLE *PREF: 92.06* *Default: TRUE* *Range: FALSE / TRUE*

This provides a means of electronically inhibiting Drive operation. Whilst running, setting this parameter to FALSE disables the Drive operation and causes the motor to coast.

NOT FAST STOP *PREF: 92.07* *Default: TRUE* *Range: FALSE / TRUE*

Whilst running or jogging, setting this parameter to FALSE causes the Drive to ramp to zero. The rate is set by FAST STOP RATE in the STOP function block. The action of setting NOT FAST STOP to TRUE is latched. The Drive cannot be restarted until fast stop is completed.

NOT COAST STOP *PREF: 92.08* *Default: TRUE* *Range: FALSE / TRUE*

Setting this parameter to FALSE disables the Drive operation and causes the motor to coast. The action of setting this parameter to TRUE is latched. The Drive can not be restarted until the coast stop is completed.
A detailed description of the sequencer states, as indicated by the SEQUENCER STATE parameter, is described in Appendix B

REMOTE REVERSE *PREF: 92.09* *Default: FALSE* *Range: FALSE / TRUE*

For remote setpoints, setting this parameter TRUE inverts the demanded direction of motor rotation.

REM TRIP RESET *PREF: 92.10* *Default: FALSE* *Range: FALSE / TRUE*

On a transition to TRUE, this input clears latched trips.

TRIP RST BY RUN *PREF: 92.11* *Default: TRUE* *Range: FALSE / TRUE*

This allows the rising edge of run command to clear latched trips.

POWER UP START *PREF: 92.12* *Default: FALSE* *Range: FALSE / TRUE*

If TRUE, this allows the Drive to go directly to run mode on power-up if in remote and a run command is present. If FALSE, a low to high transition of the run command is required.

Parameter Descriptions

TRIPPED *PREF: 92.13* *Default: FALSE* *Range: FALSE / TRUE*

Indicates that there is a latched trip present.

RUNNING *PREF: 92.14* *Default: FALSE* *Range: FALSE / TRUE*

Indicates that that the Drive is in the enabled state.

JOGGING *PREF: 92.15* *Default: FALSE* *Range: FALSE / TRUE*

Indicates that the Drive is in the JOG mode.

STOPPING *PREF: 92.16* *Default: FALSE* *Range: FALSE / TRUE*

Indicates that the Drive is stopping.

OUTPUT CONTACTOR *PREF: 92.17* *Default: FALSE* *Range: FALSE / TRUE*

Output to be used to drive an external contactor in the motor output. This contactor is normally closed unless a Trip condition has occurred or the Drive goes into the re-configuration mode.

SWITCH ON ENABLE *PREF: 92.18* *Default: FALSE* *Range: FALSE / TRUE*

Sometimes referred to as READY TO SWITCH ON, this parameter indicates that the Drive will accept a run command.

SWITCHED ON *PREF: 92.19* *Default: FALSE* *Range: FALSE / TRUE*

Run accepted. Waiting for CONTACTOR CLOSED and any motor deflux delay to be completed

READY *PREF: 92.20* *Default: FALSE* *Range: FALSE / TRUE*

Indicates that the Drive's power stack is operable and the Drive will run if enabled.

SYSTEM RESET *PREF: 92.21* *Default: FALSE* *Range: FALSE / TRUE*

TRUE for a single block diagram execution cycle after the Drive enters either RUN or JOG mode.

Parameter Descriptions

SEQUENCER STATE *PREF: 92.22* *Default:0* *Range: See below*

This parameter indicates the current sequencing state:

Enumerated Value : *State*

0 : START DISABLED
1 : START ENABLED
2 : SWITCHED ON
3 : READY
4 : ENABLED
5 : F-STOP ACTIVE
6 : TRIP ACTIVE
7 : TRIPPED

Refer to Appendix B : “Sequencing Logic States”.

REMOTE REV OUT *PREF: 92.23* *Default: FALSE* *Range: FALSE / TRUE*

This parameter indicates the current state of remote direction and RUN REVERSE. Note - this is the demanded direction, not the actual direction.

HEALTHY *PREF: 92.24* *Default: TRUE* *Range: FALSE / TRUE*

Set FALSE when the Drive trips, and set TRUE when the run command is removed.

FAN RUNNING *PREF: 92.26* *Default: FALSE* *Range: FALSE / TRUE*

This can be used to control the running of externally supplied fans. TRUE when the drive heatsink is hot, when the ambient temperature is high or when the motor load is high. Remains TRUE for 60s after the load or temperature has dropped. Initialised TRUE on frame size B following a power on.

CONTACTOR DELAY *PREF: 92.27* *Default: 10.0 s* *Range: 1.0 to 10 s*

On entry to the SWITCHED ON state the sequencing logic sets the OUTPUT CONTACTOR output to TRUE and starts an internal delay timer. The logic then waits for the feedback signal CONTACTOR CLOSED to be TRUE before moving on to the READY state. If the CONTACTOR CLOSED signal does not go TRUE within the delay time set by CONTACTOR DELAY then the drive will trip with a CONTACTOR FBK trip.

SETPOINT DISPLAY

SETUP::MENUS::SETPOINT DISPLAY

This function block allows you to customise the setpoint name and setpoint parameter value.

Parameter Descriptions

NAME *PREF: 32.02* *Default:* *Range: max length 16 chars*

Enter your customised text for the setpoint name. If this name is left blank, then the default setpoint name will be used, for example: SETPOINT (LOCAL), SETPOINT (JOG) etc.

SCALING *PREF: 32.03* *Default: 0* *Range: 0 to 4*

A scaling factor applied to the speed setpoint and feedback displays. Selects a DISPLAY SCALE function block to be applied.

Enumerated Value : *State*

0 : NONE
1 : DISPLAY SCALE 1
2 : DISPLAY SCALE 2
3 : DISPLAY SCALE 3
4 : DISPLAY SCALE 4

IGNORE PASSWORD *PREF: 32.05* *Default: TRUE* *Range: FALSE / TRUE*

When TRUE the setpoint may be modified even when a password is used to make all other parameter read-only.

SKIP FREQUENCIES

SETUP::MOTOR CONTROL::SKIP FREQUENCIES

This function block may be used to prevent the Drive operating at frequencies that cause mechanical resonance in the load.

Parameter Descriptions

INPUT *PREF: 91.01* *Default: 0.00 %* *Range: -300.00 to 300.00 %*

The value of the block input in %.

BAND 1 *PREF: 91.02* *Default: 0.0 Hz* *Range: 0.0 to 500.0 Hz*

The width of each skip band in Hz.

FREQUENCY 1 *PREF: 91.03* *Default: 0.0 Hz* *Range: 0.0 to 500.0 Hz*

This parameter contains the centre frequency of each skip band in Hz.

BAND 2 *PREF: 91.04* *Default: 0.0 Hz* *Range: 0.0 to 500.0 Hz*

The width of each skip band in Hz.

FREQUENCY 2 *PREF: 91.05* *Default: 0.0 Hz* *Range: 0.0 to 500.0 Hz*

This parameter contains the centre frequency of each skip band in Hz.

BAND 3 *PREF: 91.06* *Default: 0.0 Hz* *Range: 0.0 to 500.0 Hz*

The width of each skip band in Hz.

FREQUENCY 3 *PREF: 91.07* *Default: 0.0 Hz* *Range: 0.0 to 500.0 Hz*

This parameter contains the centre frequency of each skip band in Hz.

BAND 4 *PREF: 91.08* *Default: 0.0 Hz* *Range: 0.0 to 500.0 Hz*

The width of each skip band in Hz.

FREQUENCY 4 *PREF: 91.09* *Default: 0.0 Hz* *Range: 0.0 to 500.0 Hz*

This parameter contains the centre frequency of each skip band in Hz.

Parameter Descriptions

OUTPUT	*PREF: 91.10*	*Default: —.xx %*	*Range: —.xx %*
Diagnostic on the output of the function block in %			
OUTPUT HZ	*PREF: 91.11*	*Default: —.x Hz*	*Range: —.x Hz*
Diagnostic on the output of the function block in Hz			
INPUT HZ	*PREF: 91.12*	*Default: —.x Hz*	*Range: —.x Hz*
Diagnostic on the input of the function block in Hz			

Functional Description

Four programmable skip frequencies are available to avoid resonances within the mechanical system. Enter the value of frequency that causes the resonance using the “FREQUENCY” parameter and then programme the width of the skip band using its “BAND” parameter. The Drive will then avoid sustained operation within the forbidden band as shown in the diagram. The skip frequencies are symmetrical and thus work in forward and reverse.

Note ***Setting the FREQUENCY to 0 disables the corresponding band. Setting the BAND to 0 causes the value of BAND 1 to be used for this band.***

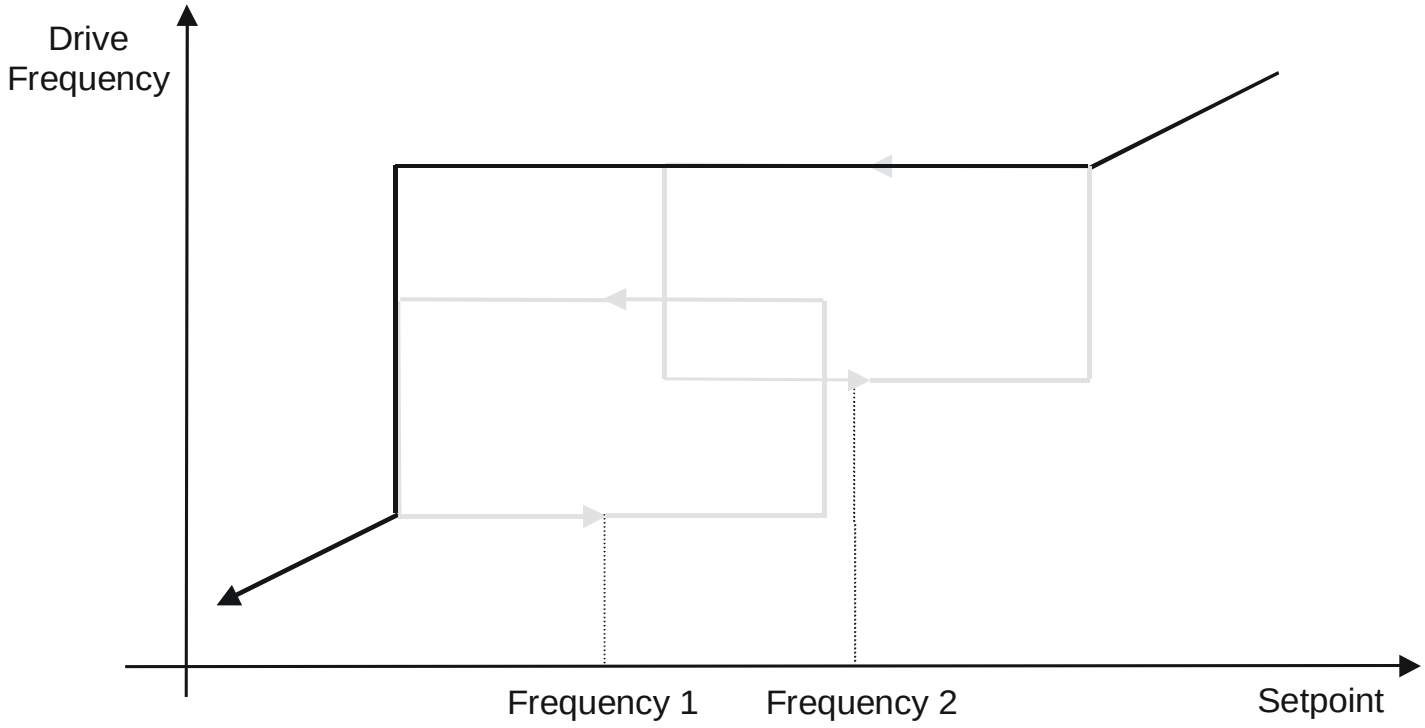
Drive
Frequency
Frequency 1
Frequency 2
Setpoint

The behaviour of this function block is illustrated below.

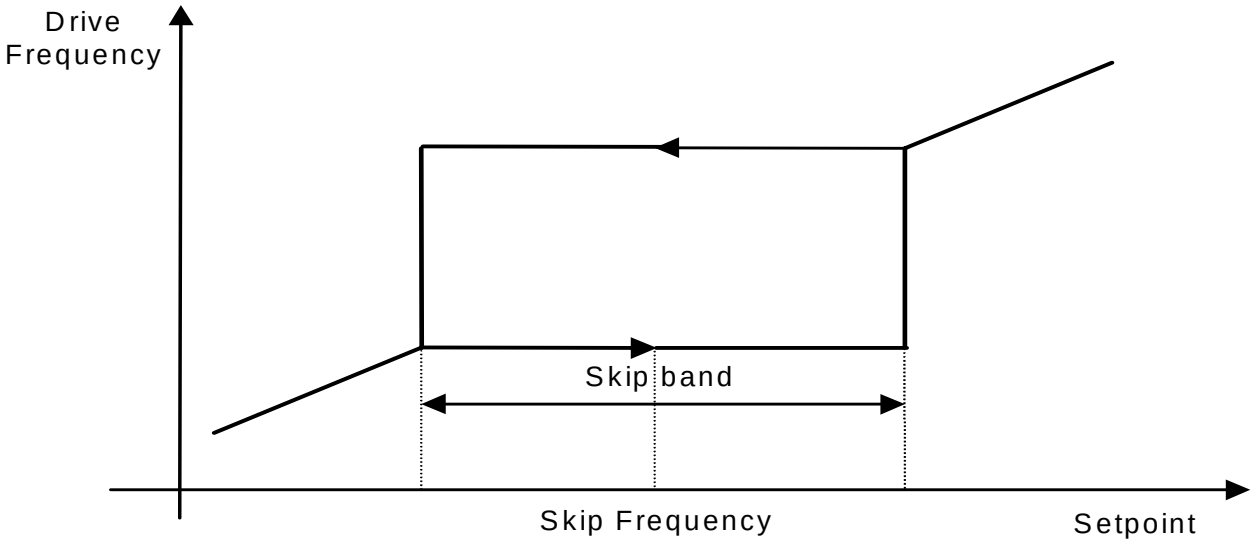

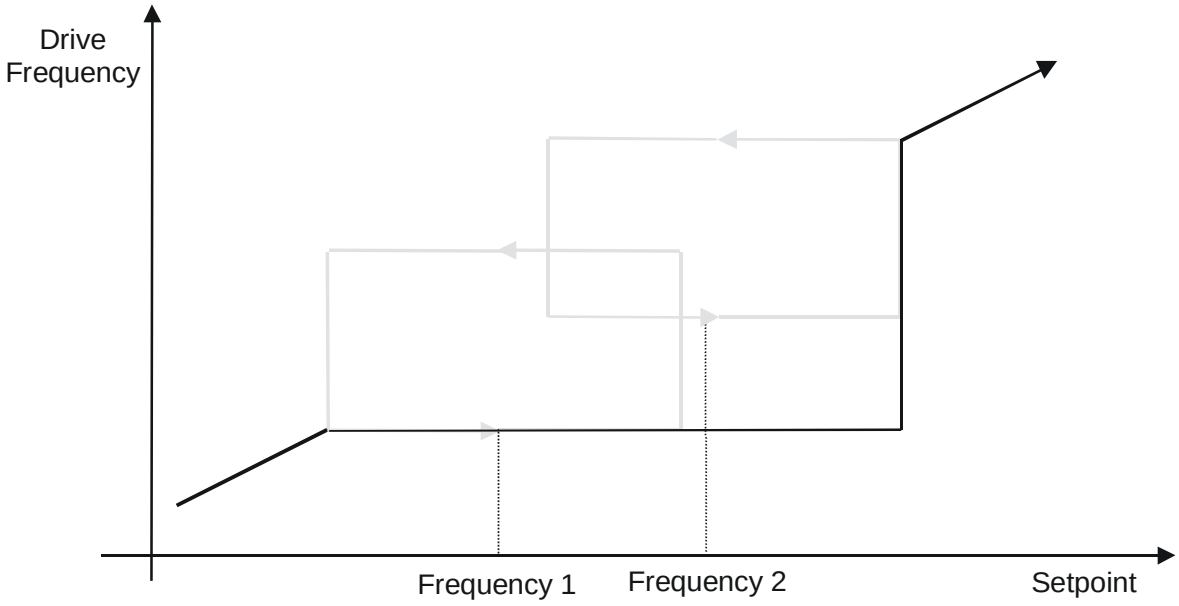

SLEW RATE LIMIT

SETUP::MOTOR CONTROL::SLEW RATE LIMIT

Designed for all Motor Control Modes.

This function block prevents over-current and over-voltage faults occurring due to a rapidly changing setpoint.

Parameter Descriptions

ENABLE	PREF: 22.01	Default: TRUE	*Range: FALSE / TRUE*

When this parameter is FALSE, this function block is disabled and the setpoint is unaffected by this function block.

ACCEL LIMIT	PREF: 22.02	Default: 500.0 Hz/s	*Range: 1.0 to 1200.0 Hz/s*

The maximum rate at which the setpoint may accelerate away from zero.

DECEL LIMIT	PREF: 22.03	Default: 500.0 Hz/s	*Range: 1.0 to 1200.0 Hz/s*

The maximum rate at which the setpoint may decelerate towards zero.

Functional Description

The SLEW RATE LIMIT block obtains the setpoint from the output of the application, correctly scaled by the REFERENCE block. The rate of change limits are applied and the setpoint is then passed on for further processing.

When the braking block determines that the internal dc link voltage is too high it issues a Hold signal. This causes the SLEW RATE LIMIT block to hold the setpoint at its current value. This typically lasts for only 1ms, time for the excess energy to be dumped into the dynamic braking resistor.

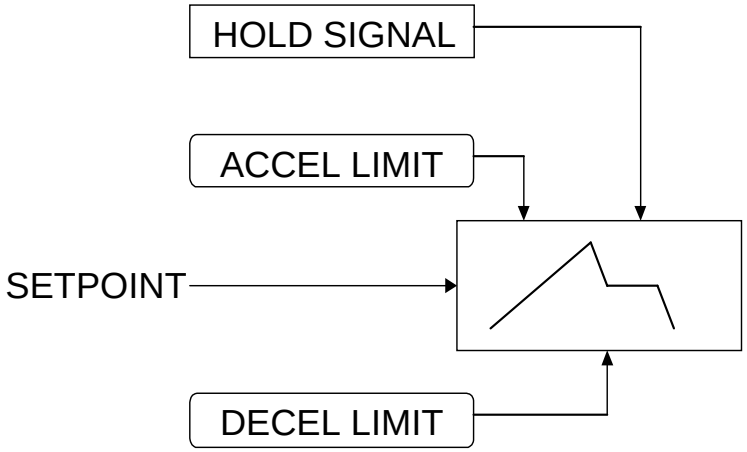

Note ***If the drive is part of a common DC link/bus system set the ENABLE parameter to FALSE. This disables ramp-hold during deceleration on high link volts feature.***

SLIP COMP

SETUP::MOTOR CONTROL::SLIP COMP

Designed for VOLTS/Hz motor Control Mode.

The slip compensation function block allows the Drive to maintain motor speed in the presence of load disturbances.

Parameter Descriptions

ENABLE *PREF: 23.01* *Default: FALSE* *Range: FALSE / TRUE*

For the slip compensation to be operational this must be TRUE.

MOTORING LIMIT *PREF: 23.02* *Default: 150.0 rpm* *Range: 0.0 to 600.0 rpm*

The maximum trim that will be produced by the slip compensation block when the motor is driving the load (motoring).

REGEN LIMIT *PREF: 23.03* *Default: 150.0 rpm* *Range: 0.0 to 600.0 rpm*

The maximum trim that will be produced by the slip compensation block when the motor is being driven by the load, (regenerating).

Functional Description

Based on the rated speed, the no load speed and the rated load of the motor, the slip compensation block adjusts the demand frequency to compensate for any speed reduction resulting from the load.

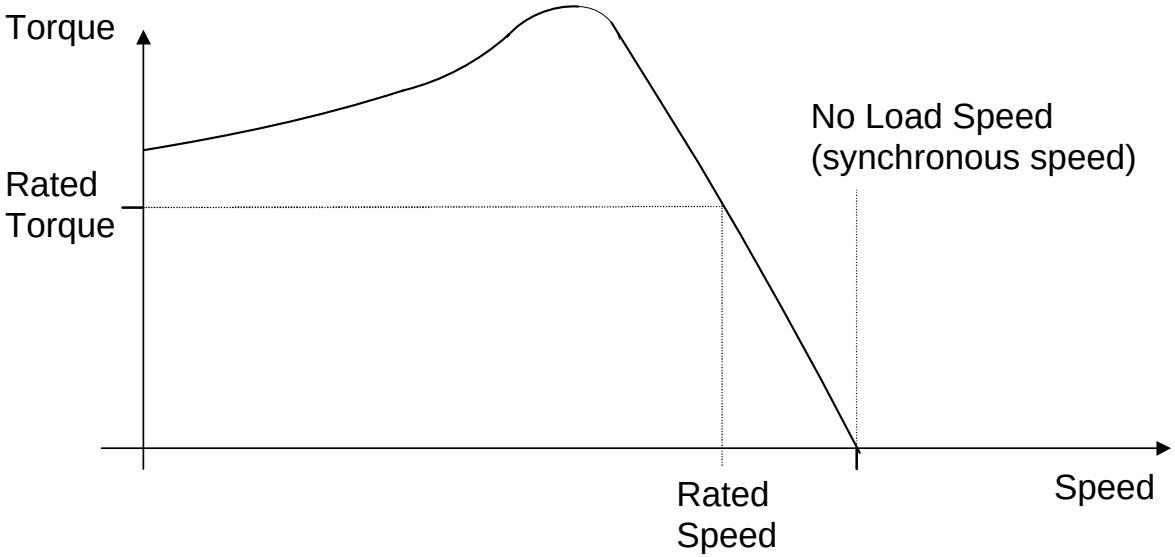
Torque
Rated
Torque
No Load Speed
(synchronous speed)
Rated
Speed
Speed

SPEED FBK TRIP

SETUP::TRIPS::SPEED FBK TRIP

CLOSED-LOOP VEC Motor Control Mode only.

The speed feed back trip operates by looking at speed error and comparing it against THRESHOLD.

If the error exceeds this threshold for a period greater than DELAY, then a trip is triggered. The trip is only active while the drive is operating in Closed-Loop Vector Control and not in Autotune. When using the drive in torque control, this trip should be disabled to prevent nuisance tripping by setting INHIBIT to TRUE.

Torque control is defined as operating in torque or current limit, or if the TORQ DMD ISOLATE parameter in the SPEED LOOP function block is TRUE.

Parameter Descriptions

INHIBIT *PREF: 115.01* *Default: FALSE* *Range: FALSE / TRUE*

Set this parameter to TRUE to disable the speed feedback trip.

THRESHOLD *PREF: 115.02* *Default: 50.00 %* *Range: 0.00 to 300.00 %*

Sets a threshold below which the trip will not operate. The value of THRESHOLD is compared to the value of SPEED ERROR (from the SPEED LOOP function block).

DELAY *PREF: 115.03* *Default: 10.00 %* *Range: 0.00 to 10.00 s*

Sets the time the trip must be present for before a trip is triggered.

TRIPPED *PREF: 115.04* *Default: FALSE* *Range: FALSE / TRUE*

This is a diagnostic output indicating the current state of the speed feedback trip.

SPEED LOOP

SETUP::MOTOR CONTROL::SPEED LOOP

Designed for SENSORLESS VEC and CLOSED-LOOP VEC Motor Control Modes.

This function block controls the speed of the motor by comparing the actual speed to the demanded speed, and applying more or less torque in response to the error.

Fixed Inputs and Outputs

These parameters are not viewable on the keypad, They are accessible using the DSE 890 Configuration Tool.

Speed Demand

This is connected to the output of the REFERENCE function block.

Speed Feedback

The speed feedback is derived from the encoder when the Control Mode is configured as CLOSED-LOOP VEC. When configured as SENSORLESS VEC the speed feedback is calculated from the voltages and currents slowing in the motor, and the motor model.

Torque Demand

The output of the SPEED LOOP function block is a torque demand. This torque demand is passed on to the TORQUE LIMIT function block.

Parameter Descriptions

SPEED PROP GAIN *PREF: 78.01* *Default: 20.0* *Range: 0.0 to 3000.0*

Sets the proportional gain of the loop.
Speed error (revolutions per second) x proportional gain = torque percent.

SPEED INT TIME *PREF: 78.02* *Default: 100 ms* *Range: 1 to 15000 ms*

This is the integral time constant of the speed loop. A speed error which causes the proportional term to produce a torque demand T, will cause the integral term to also ramp up to a torque demand T after a time equal to “speed int time”.

Parameter Descriptions

INT DEFEAT	*PREF: 78.03*	*Default: FALSE*	*Range: FALSE / TRUE*

When TRUE, the integral term does not operate.

SPEED INT PRESET	*PREF: 78.04*	*Default: 0.00 %*	*Range: -500.00 to 500.00 %*

The integral term will be preset to this value when the drive starts.

SPEED DMD FILTER	*PREF: 78.05*	*Default: 0.0 ms*	*Range: 0.0 to 14.0 ms*

The speed demand is filtered to reduce ripple. The filter is first order with time constant equal to the value of this parameter.

SPEED FBK FILTER	*PREF: 78.06*	*Default: 0.0 ms*	*Range: 0.0 to 15.0 ms*

The speed feedback is filtered to reduce ripple, such as that caused by low line count encoders. The filter is first order with time constant equal to the value of this parameter.

AUX TORQUE DMD	*PREF: 78.07*	*Default: 0.00 %*	*Range: -300.00 to 300.00 %*

When the drive is operating in speed control mode, the value of this parameter is added on to the torque demand produced by the speed loop PI. When the drive is operating in torque control mode (i.e. “torque demand isolate is TRUE) the speed loop PI does not operate, and the torque demand becomes the sum of this parameter plus the DIRECT INPUT (if selected).

ADAPTIVE THRESH	*PREF: 78.08*	*Default: 5.00 %*	*Range: 0.00 to 10.00 %*

If the speed demand is less than the adaptive threshold, the speed loop proportional gain is the adaptive p-gain.

ADAPTIVE P-GAIN	*PREF: 78.09*	*Default: 20.00*	*Range: 0.00 to 300.00*

Proportional gain used if speed demand < adaptive threshold.

Parameter Descriptions

DIRECT IP SELECT	*PREF: 78.10*	*Default: 0*	*Range: See below*

The direct input to the speed loop is an analog input which is sampled synchronously with the speed loop. This ensures that the speed loop always has the most up-to-date value of the input, allowing it to respond faster. Any one of the four analog inputs can be selected as the direct input. If NONE is selected, the input is set to zero. When not in use, it should be disabled by selecting NONE.

Enumerated Value : *Direct IP Select*

0 : NONE
1 : ANIN1
2 : ANIN2
3 : ANIN3
4 : ANIN4
5 : ANIN5

DIRECT RATIO	*PREF: 78.11*	*Default: 1.0000*	*Range: -10.0000 to 10.0000*

The Direct Input is multiplied by this parameter.

DIRCT IP POS LIM	*PREF: 78.12*	*Default: 110.00 %*	*Range: -110.00 to 110.00 %*

This limits the upper value of the Direct Input.

DIRCT IP NEG LIM	*PREF: 78.13*	*Default: -110.00 %*	*Range: -110.00 to 110.00 %*

This limits the lower value of the Direct Input.

SPEED POS LIM	*PREF: 78.14*	*Default: 110.00 %*	*Range: -110.00 to 110.00 %*

This sets the upper limit of the speed demand.

SPEED NEG LIM	*PREF: 78.15*	*Default: -110.00 %*	*Range: -110.00 to 110.00 %*

This sets the lower limit of the speed demand.

Parameter Descriptions

TORQ DMD ISOLATE	*PREF: 78.16*	*Default: FALSE*	*Range: FALSE / TRUE*

Selects between Speed Control mode and Torque Control mode. When TRUE, (Torque Control mode) the torque demand output from the speed loop block is the sum of the Direct Input plus the AUX TORQUE DMD parameter.

TOTAL SPD DMD RPM	*PREF: 78.17*	*Default: —.xx rpm*	*Range: —.xx rpm*

This diagnostic shows the final values of the speed demand in rpm obtained after summing all sources. This is the value which is presented to the speed loop.

TOTAL SPD DMD %	*PREF: 78.18*	*Default: —.00 %*	*Range: —.00 %*

This diagnostic shows the final values of the speed demand as a % of MAX SPEED obtained after summing all sources. This is the value which is presented to the speed loop.

SPEED ERROR	*PREF: 78.19*	*Default: —.00 %*	*Range: —.00 %*

Shows the difference between the demanded speed and the actual speed as a % of MAX SPEED.

TORQUE DEMAND	*PREF: 78.20*	*Default: —.00 %*	*Range: —.00 %*

Shows the demanded motor torque as a percentage of rated motor torque.

DIRECT INPUT	*PREF: 78.21*	*Default: —.00 %*	*Range: —.00 %*

Shows the value of the Direct Input, after scaling and clamping.

PHASE INPUT	*PREF: 78.26*	*Default: —.00 %*	*Range: —.00 %*

Shows the value of the Phase PID Output connected internally.

Parameter Descriptions

COMPENSATN TYPE *PREF: 78.30* *Default: 0* *Range: See below*

Selects the type of compensation applied to the torque demand. Refer to Functional Description for selection details.

Enumerated Value : *Type*

0 : NONE
1 : MAX ATTENUATION
2 : MINIMUM PHASE
3 : PHASE ADVANCE
4 : NOTCH FILTER

COMPENSATION F1 *PREF: 78.27* *Default: 2000 Hz* *Range: 200 to 8000 Hz*

Performs various functions as described in Functional Description, depending on which compensation mode is selected by COMPENSATN TYPE.

COMPENSATION F2 *PREF: 78.31* *Default: 2000 Hz* *Range: 200 to 8000 Hz*

Used only when COMPENSATN TYPE selection is “PHASE ADVANCE”. In this case it sets the end frequency F2 for the phase advance (start frequency is set by COMPENSATION F1).

DEMAND SOURCE *PREF: 78.28* *Default: 1* *Range: See below*

This diagnostic shows the source of the speed demand.

Enumerated Value : *Demand Source*

0 : LOCAL	Local reference
1 : REMOTE	Remote Reference
2 : COMMS	Comms reference
3 : CELITE+	(reserved)
4 : FIREWIRE	Firewire reference, with system ramp in use
5 : DIRECT FIREWIRE	Firewire reference, with system ramp bypassed.

Parameter Descriptions

SPD PI OUTPUT *PREF: 78.29* *Default: —.00 %* *Range: —.00 %*

This diagnostic shows the torque demand due to the speed loop PI output, not including any feedforward terms.

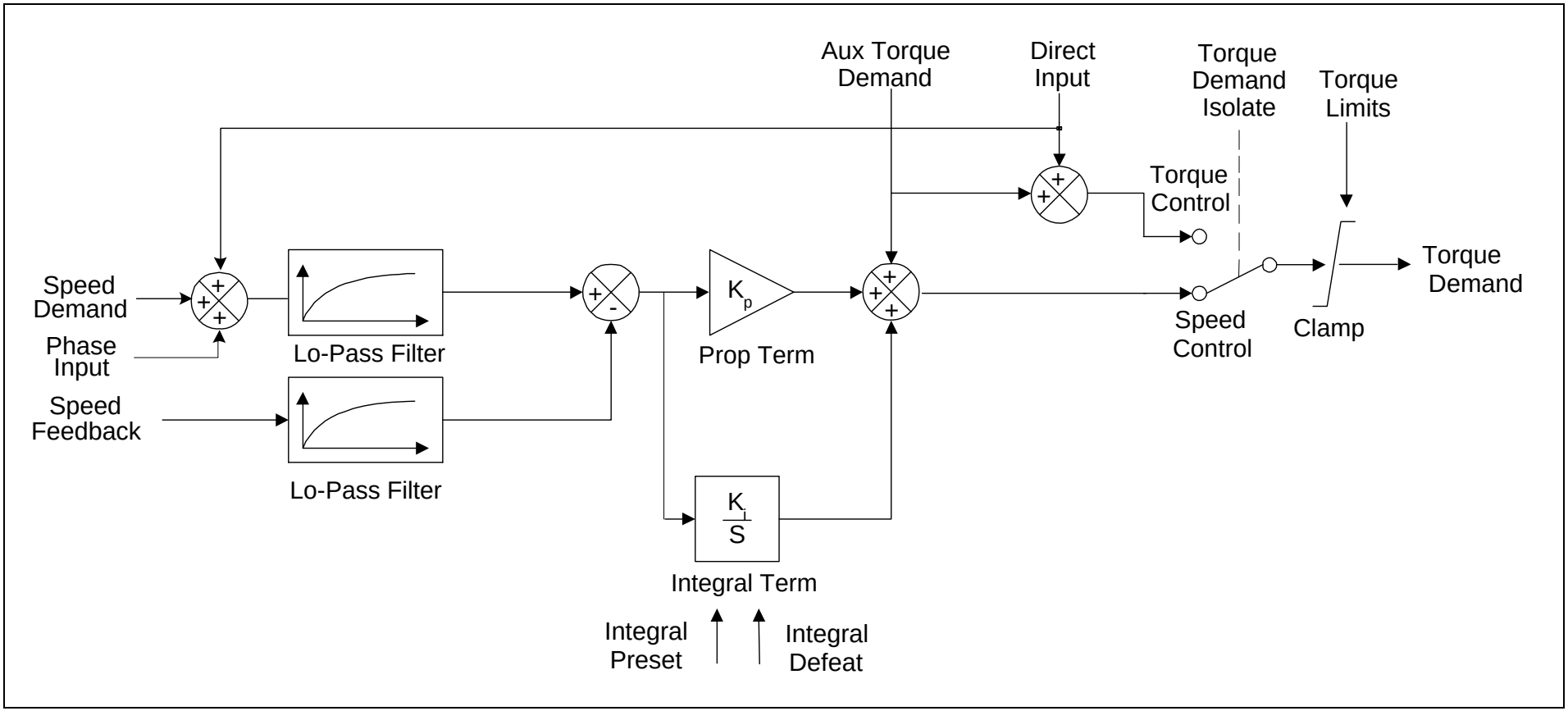

Functional Description

The speed error (speed demand minus speed feedback) is calculated and processed via a proportional + integral (PI) controller. The output of the PI controller is a torque demand, which is passed directly to the torque control block.

The speed demand is derived from the Setpoint Scale block. The speed feedback is derived from the encoder when the drive is in CLOSED-LOOP VEC mode. This mode gives the best control, as the feedback is fast and accurate. When the drive is in SENSORLESS VEC mode, the speed feedback is calculated from the voltages and currents flowing in the motor, and the motor model.

The parameters COMPENSATION F1 and COMPENSATION F2 perform different functions depending upon the setting of the COMPENSAT'N TYPE parameter:

COMPENSAT'N TYPE:

MAX ATTENTUATION
This applies a first order filter with 3db attenuation frequency given by parameter “COMPENSATION F1”.

This form of compensation has a more efficient roll off characteristic, falling to zero at the Nyquist limit (see “Nyquist limit” below). The Nyquist limit is equal to half the loop operating frequency, it has the disadvantage that it adds additional phase delay equal to a time delay of half a sample period to the transfer function. This delay is equal to 1/(4 * switching frequency). For example, if the switching frequency is 4kHz, the delay is equal to 62.5uS.

Nyquist Limit: This is defined as half the control loop operating frequency. The control loops operate at twice the stack switching frequency, so the Nyquist Limit is equal to the stack switching frequency.

MINIMUM PHASE
This applies a simple first order recursive filter with 3db attenuation frequency given approximately by parameter COMPENSATION F1. This type of compensation has a less efficient roll off characteristic, but has less phase shift than the MAX ATTENTUATION filter, as there is no additional time delay.

PHASE ADVANCE

This selection implements a transfer function of the type $\frac{1 + s / 2*pi*f1}{1 + s / 2*pi*f2}$, which gives a phase advance between the frequencies f1 to f2. When this function is selected, the values of f1 and f2 are set by the parameters COMPENSATION F1 and COMPENSATION F2.

NOTCH FILTER

This selection will give a zero transmission notch at a frequency specified by parameter COMPENSATION F1. It has a phase delay of 1 sample period. A sample period is 1/(2 * switching frequency). For example, if the switching frequency is 4kHz, a sample period is 125us.

Summary

"COMPENSAT'N TYPE" Selection	Compensation Type	Action of "COMPENSATION F1"	Action of COMPENSATION F2"
NONE	Torque demand is transmitted unchanged.	-	-
MAX ATTENTUATION	First order filter with zero transmission at Nyquist limit.	sets 3db cutoff frequency	has no effect
MINIMUM PHASE	First order recursive filter with minimum phase shift.	sets 3db cutoff frequency	has no effect
PHASE ADVANCE	Phase advance function.	Sets value of f1 (beginning of phase advance).	Sets value of f2 (end of phase advance).
NOTCH FILTER	Zero transmission notch at selected frequency.	Sets frequency of zero transmission notch.	has no effect

SPEED LOOP 2

SETUP::MOTOR CONTROL::SPEED LOOP 2

Designed for SENSORLESS VEC and CLOSED-LOOP VEC Motor Control Modes.

There are three filters operating on the speed loop torque demand output. They add compensation to the transfer function of the motor and load. This can improve performance. Use the tuning tool in the DSE 890 Configuration Tool to set these filters optimally.

Setting the Filter Type to NONE will cause the filter to have no effect. If compensation is required, up to three filters may be selected in any order and in any combination.

One of the filters is located in the SPEED LOOP function block, the other two filters are located in the SPEED LOOP 2 function block (this block).

- The SPEED LOOP function block contains one filter: this is selected by COMPENSATION F1 and COMPENSAT'N TYPE (a second parameter COMPENSATION F2 is also used when the compensation type is selected to be *PHASE ADVANCE*).
- The SPEED LOOP 2 function block (this block) contains two filters: these are selected by TQ COMP 2 FREQ and SELECT TQ COMP 2, and also TQ COMP 3 FREQ and SELECT TQ COMP 3.

Parameter Descriptions

SELECT TQ COMP 2

PREF: 163.1 *Default: NONE* *Range: See below*

Selects the type of compensation applied to the torque demand. Refer to Functional Description in the SPEED LOOP function block for selection details. (*PHASE ADVANCE* is not selectable with this filter)

Enumerated Value : *Filter Type*

0 : NONE
1 : MAX ATTENUATION
2 : MINIMUM PHASE
3 : NOTCH FILTER

Parameter Descriptions

TQ COMP 2 FREQ *PREF: 163.2* *Default: 2000 Hz* *Range: 100 to 8000 Hz*

Performs various functions as described in Functional Description in the SPEED LOOP function block, depending on which compensation mode is selected by SELECT TQ COMP 2.

SELECT TQ COMP 3 *PREF: 163.3* *Default: NONE* *Range: See below*

Selects the type of compensation applied to the torque demand. Refer to Functional Description in the SPEED LOOP function block for selection details. (*PHASE ADVANCE* is not selectable with this filter)

Enumerated Value : *Filter Type*

0 : NONE
1 : MAX ATTENUATION
2 : MINIMUM PHASE
3 : NOTCH FILTER

TQ COMP 3 FREQ *PREF: 163.4* *Default: 2000 Hz* *Range: 100 to 8000 Hz*

Performs various functions as described in Functional Description in the SPEED LOOP function block, depending on which compensation mode is selected by SELECT TQ COMP 3.

STABILISATION

SETUP::MOTOR CONTROL::STABILISATION

Designed for VOLTS/Hz motor Control Mode.

Enabling this function reduces the problem of unstable running in induction motors. This can be experienced at approximately half full speed, and under low load conditions.

Parameter Descriptions

ENABLE	*PREF: 25.01*	*Default: TRUE*	*Range: FALSE / TRUE*

STALL TRIP

SETUP::TRIPS::STALL TRIP

The function block protects the motor from damage that may be caused by continuous operation beyond specification (i.e. in a stalled condition).

Parameter Descriptions

STALL TIME	*PREF: 105.01*	*Default: 120.0 s*	*Range: 0.1 to 3000.0 s*

The time after which a stall condition will cause a trip.

STALL LIMIT TYPE	*PREF: 105.03*	*Default: 0*	*Range: See below*

This parameter determines whether the stall trip operates on motor torque or motor current.

Enumerated Value : *Stall Limit Type*

0 : TORQUE
1 : CURRENT

Functional Description

If STALL LIMIT TYPE is set to TORQUE and the estimated load exceeds the active TORQUE LIMIT (refer to the TORQUE LIMIT function block) for a time greater than STALL TIME then the stall trip will become active. The timer is reset whenever the estimated load is less than the active Torque Limit.

Similarly, if the STALL LIMIT TYPE is set to CURRENT and the measured current exceeds the active Current limit (i.e. the drive is in current limit) for a time greater than STALL TIME then the stall trip will become active. The timer is reset whenever the measured current is less than the active Current Limit.

Refer to Chapter 10 for a description of the trips supported by the Drive.

SYNTHETIC ENCODER

SETUP::PHASE CONTROL::SYNTHETIC ENCODR

(Virtual Master Simulator) This function generates A, B, and Z pulses, equivalent to an encoder following either the virtual master or the motor shaft or the load position (see SOURCE parameter).

Parameter Descriptions

MODE SELECT *PREF:160.01* *Default: OFF* *Range:See below*

Some versions of hardware support the direct repeat function. That is, the outputs of either the feedback encoder, or if fitted, the reference encoder, may be electrically buffered and switched directly to the output pins. To select this function, select RPEAT FBK ENCODER or RPEAT REF ENCODER as desired. Otherwise select RUN SYNTH ENCDR to run the synthetic encoder.

Enumerated Value : Mode Select

0 : OFF
1 : RUN SYNTH ENCDR
2 : RPEAT FBK ENCDR
3 : RPEAT REF ENCDR

SOURCE *PREF:160.09* *Default: V MASTER POSN* *Range:See below*

This selects the input to the synthetic encoder. Selecting V MASTER POSN will cause the synthetic encoder to directly follow the virtual master. It can also be set to follow the feedback or reference encoders. Note that this is not the same as selecting the direct electrical repeat in MODE SELECT. Both the feedback and the reference encoders have a software gearbox function, which continuously calculates the position of a load on the other side of a gearbox connected to the motor shaft or reference shaft. It is possible to select the synthetic encoder to follow the encoder shaft directly, or to follow the position of the load on the other side of the gearbox. For example, to follow the feedback encoder directly, select FBK ENCR SHAFT, and to follow the load on the other side of the gearbox, select FBK ENCR LOAD.

Parameter Descriptions

Enumerated Value : Source

0 : V MASTER POSN
1 : FBK ENCR SHAFT
2 : FBK ENCR LOAD
3 : REF ENCR SHAFT
4 : REF ENCR LOAD

ENCODER LINES	*PREF:160.02*	*Default:1024*	*Range: 4 to 65536*

Sets the number of lines of the simulated encoder.

DIRECTION	*PREF:160.03*	*Default: SAME AS SOURCE*	*Range:See below*

Allows inverting the synthetic encoder direction with regards to the source direction.

Enumerated Value : Direction

0 : SAME AS SOURCE
1 : REVERSE OF SRCE

Z PULSE OFFSET	*PREF:160.05*	*Default:0.000 deg.*	*Range: 0.0000 to 360.000 deg.*

Sets the position in degrees at which the marker pulse (Z pulse) occurs.

TORQUE LIMIT

SETUP::MOTOR CONTROL::TORQUE LIMIT

Designed for all Motor Control Modes.

This function block allows you to set the maximum level of motor rated torque which is allowed before torque limit action occurs.

If the estimated motor torque is greater than the ACTUAL POS LIM value, the motor speed is controlled to maintain the torque at this level. A similar situation occurs if the estimated motor torque is less that the ACTUAL NEG LIM value.

The torque limit function block has separate positive and negative torque limits. In addition, a symmetric main torque limit is also provided.

The lowest positive and negative torque limits (including any current limit or inverse time current limit action) is indicated in the ACTUAL POS LIM and ACTUAL NEG LIM diagnostic. These are the final limits used to limit motor torque.

Parameter Descriptions

POS TORQUE LIM	*PREF: 83.01*	*Default: 150.00 %*	*Range: -300.00 to 300.00 %*
This parameter sets the maximum allowed level of positive motor torque.			
NEG TORQUE LIM	*PREF: 83.02*	*Default: -150.00 %*	*Range: -300.00 to 300.00 %*
This parameter sets the maximum allowed level of negative motor torque			
MAIN TORQUE LIM	*PREF: 83.03*	*Default: 150.00 %*	*Range: 0.00 to 300.00 %*
This parameter sets the symmetric limit on the maximum allowed motor torque.			
FAST STOP T-LIM	*PREF: 83.07*	*Default: 150.00 %*	*Range: 0.00 to 300.00 %*
This parameter sets the torque limit used during a Fast Stop.			
SYMMETRIC LIM	*PREF: 83.04*	*Default: FALSE*	*Range: FALSE / TRUE/*
When TRUE, the NEG TORQUE LIM is forced to reflect the POS TORQUE LIM parameter.			

Parameter Descriptions

ACTUAL POS LIM	*PREF: 83.05*	*Default: —.00 %*	*Range: —.00 %*

This diagnostic indicates the final actual positive torque limit including any current limit or inverse time current limit action.

ACTUAL NEG LIM	*PREF: 83.06*	*Default: —.00 %*	*Range: —.00 %*

This diagnostic indicates the final actual negative torque limit including any current limit or inverse time current limit action.

TRIPS HISTORY

SETUP::TRIPS::TRIPS HISTORY

This function block records the last ten trips that caused the Drive to stop.

To do this, it stores the value of the FIRST TRIP parameter, PREF 97:09, taken from the TRIPS STATUS function block.

Parameter Descriptions

TRIP 1 (NEWEST) *PREF: 96.01* *Default: 0* *Range: See below*

Records the most recent trip that caused the Drive to stop. The values that this (and the parameters below) may take are the same as tag number 6, FIRST TRIP, detailed in the TRIPS STATUS function block.

TRIP 2 *PREF: 96.02* *Default: 0* *Range: As above*

Records the second most recent trip that caused the Drive to stop.

TRIP 3 *PREF: 96.03* *Default: 0* *Range: As above*

Records the third most recent trip that caused the Drive to stop.

TRIP 4 *PREF: 96.04* *Default: 0* *Range: As above*

Records the fourth most recent trip that caused the Drive to stop.

TRIP 5 *PREF: 96.05* *Default: 0* *Range: As above*

Records the fifth most recent trip that caused the Drive to stop.

TRIP 6 *PREF: 96.06* *Default: 0* *Range: As above*

Records the sixth most recent trip that caused the Drive to stop.

TRIP 7 *PREF: 96.07* *Default: 0* *Range: As above*

Records the seventh most recent trip that caused the Drive to stop.

TRIP 8 *PREF: 96.08* *Default: 0* *Range: As above*

Records the eighth most recent trip that caused the Drive to stop.

Parameter Descriptions

TRIP 9	*PREF: 96.09*	*Default: 0*	*Range: As above*

Records the ninth most recent trip that caused the Drive to stop.

TRIP 10 (OLDEST)	*PREF: 96.10*	*Default: 0*	*Range: As above*

Records the tenth most recent trip that caused the Drive to stop.

Functional Description

This function block provides a view of the ten most recent trips that caused the Drive to stop. Every time a new trip occurs this is entered as TRIP 1 (NEWEST and the other recorded trips are moved down. If more than ten trips have occurred since the Drive was configured then only the ten most recent trips will be available for inspection.

These parameters are preserved through a power failure.

TRIPS STATUS

SETUP::TRIPS::TRIPS STATUS

The Drive supports advanced and flexible trip logic to support monitoring of the Drive itself, the motor and the load. This function block provides a view into the current trip condition(s) and allows some trips to be disabled.

Parameter Descriptions

DISABLED WORD 1 *PREF: 97.01* *Default: 0300* *Range: 0x0000 to 0xFFFF*

Use this parameter to disable trips. Not all trips may be disabled, the DISABLED WORD 1 mask is ignored for trips that cannot be disabled. See below for which trips may be disabled and how this parameter is formed.

DISABLED WORD 2 *PREF: 97.02* *Default: 0840* *Range: 0x0000 to 0xFFFF*

Use this parameter to disable trips. Not all trips may be disabled, the DISABLED WORD 2 mask is ignored for trips that cannot be disabled. See below for which trips may be disabled and how this parameter is formed.

DISABLED WORD 3 *PREF: 97.10* *Default: 0000* *Range: 0x0000 to 0xFFFF*

Use this parameter to disable trips. Not all trips may be disabled, the DISABLED WORD 3 mask is ignored for trips that cannot be disabled. See below for which trips may be disabled and how this parameter is formed.

DISABLED WORD 4 *PREF: 97.11* *Default: 000* *Range: 0x0000 to 0xFFFF*

Use this parameter to disable trips. Not all trips may be disabled, the DISABLED WORD 4 mask is ignored for trips that cannot be disabled. See below for which trips may be disabled and how this parameter is formed.

DISABLED WORD 5 *PREF: 97.18* *Default: 0000* *Range: 0x0000 to 0xFFFF*

Use this parameter to disable trips. Not all trips may be disabled, the DISABLED WORD 5 mask is ignored for trips that cannot be disabled. See below for which trips may be disabled and how this parameter is formed.

DISABLED WORD 6 *PREF: 97.19* *Default: 0000* *Range: 0x0000 to 0xFFFF*

Use this parameter to disable trips. Not all trips may be disabled, the DISABLED WORD 6 mask is ignored for trips that cannot be disabled. See below for which trips may be disabled and how this parameter is formed.

Parameter Descriptions

ACTIVE WORD 1 *PREF: 97.05* *Default: 0000* *Range: 0x0000 to 0xFFFF*

Indicates which trips are currently active. These parameters are a coded representation of the trip status. See below for a description of how this parameter is formed.

ACTIVE WORD 2 *PREF: 97.06* *Default: 0000* *Range: 0x0000 to 0xFFFF*

Indicates which trips are currently active. These parameters are a coded representation of the trip status. See below for a description of how this parameter is formed.

ACTIVE WORD 3 *PREF: 97.14* *Default: 0000* *Range: 0x0000 to 0xFFFF*

Indicates which trips are currently active. These parameters are a coded representation of the trip status. See below for a description of how this parameter is formed.

ACTIVE WORD 4 *PREF: 97.15* *Default: 0000* *Range: 0x0000 to 0xFFFF*

Indicates which trips are currently active. These parameters are a coded representation of the trip status. See below for a description of how this parameter is formed.

ACTIVE WORD 5 *PREF: 97.22* *Default: 0000* *Range: 0x0000 to 0xFFFF*

Indicates which trips are currently active. These parameters are a coded representation of the trip status. See below for a description of how this parameter is formed.

ACTIVE WORD 6 *PREF: 97.23* *Default: 0000* *Range: 0x0000 to 0xFFFF*

Indicates which trips are currently active. These parameters are a coded representation of the trip status. See below for a description of how this parameter is formed.

WARNINGS WORD 1 *PREF: 97.07* *Default: 0000* *Range: 0x0000 to 0xFFFF*

Indicates which trips are currently active. These parameters are a coded representation of the trip status. See below for a description of how this parameter is formed.

WARNINGS WORD 2 *PREF: 97.08* *Default: 0000* *Range: 0x0000 to 0xFFFF*

Indicates which conditions are likely to cause a trip. These parameters are a coded representation of the warning status. See

Parameter Descriptions

below for a description of how this parameter is formed.

WARNINGS WORD 3 *PREF: 97.16* *Default: 0000* *Range: 0x0000 to 0xFFFF*

Indicates which conditions are likely to cause a trip. These parameters are a coded representation of the warning status. See below for a description of how this parameter is formed.

WARNINGS WORD 4 *PREF: 97.17* *Default: 0000* *Range: 0x0000 to 0xFFFF*

Indicates which conditions are likely to cause a trip. These parameters are a coded representation of the warning status. See below for a description of how this parameter is formed.

WARNINGS WORD 5 *PREF: 97.24* *Default: 0000* *Range: 0x0000 to 0xFFFF*

Indicates which conditions are likely to cause a trip. These parameters are a coded representation of the warning status. See below for a description of how this parameter is formed.

WARNINGS WORD 6 *PREF: 97.25* *Default: 0000* *Range: 0x0000 to 0xFFFF*

Indicates which conditions are likely to cause a trip. These parameters are a coded representation of the warning status. See below for a description of how this parameter is formed.

FIRST TRIP *PREF: 97.09* *Default: 0* *Range: see table below*

From when a trip occurs until that trip is reset, this parameter indicates the trip source. When several trips have occurred, this parameter indicates the first one that was detected.

U PHASE FAULT *PREF: 97.26, 97.27, 97.28* *Default: FALSE* *Range: FALSE / TRUE*

V PHASE FAULT

W PHASE FAULT

These parameters are valid on an 890PX. They indicate which output phase(s) has(have) reported a fault. Typically, these parameters may be used to identify the phase on which a fan has failed or an over temperature condition has occurred.

Functional Description

The tables below shows the possible parameter values for FIRST TRIP, and the TRIPS HISTORY function block.

The DISABLED WORD 1 , ACTIVE WORD 1 and WARNINGS WORD 1 parameters use a four digit hexadecimal number to identify individual trips. Each trip has a unique corresponding number as shown below.

Trip Name (MMI)	Value	Mask	User Disable	Auto-restart
NO TRIP	0	0x0000	N/A	N/A
OVERVOLTAGE	1	0x0001	No	Yes
UNDERVOLTAGE	2	0x0002	No	Yes
OVERCURRENT	4	0x0004	No	Yes
HEATSINK	8	0x0008	No	Yes
EXTERNAL TRIP	16	0x0010	No	Yes
INPUT 1 BREAK	32	0x0020	Yes	Yes
INPUT 2 BREAK	64	0x0040	Yes	Yes
MOTOR STALLED	128	0x0080	Yes	Yes
INVERSE TIME	256	0x0100	Yes	Yes
BRAKE RESISTOR	512	0x0200	Yes	Yes
BRAKE SWITCH	1024	0x0400	Yes	Yes
OP STATION	2048	0x0800	Yes	Yes
LOST COMMS	4096	0x1000	Yes	Yes
CONTACTOR FBK	8192	0x2000	Yes	Yes
SPEED FEEDBACK	16384	0x4000	Yes	Yes
AMBIENT TEMP	32768	0x8000	No	Yes

The DISABLED WORD 2 , ACTIVE WORD 2 and WARNINGS WORD 2 parameters use a four digit hexadecimal number to identify individual trips. Each trip has a unique corresponding number as shown below.

Trip Name (MMI)	Value	Mask +	User Disable	Auto-restart
NO TRIP	0	0x0000	N/A	N/A
MOTOR OVERTEMP	1	0x0001	Yes	Yes
CURRENT LIMIT	2	0x0002	No	Yes
TRIP 19 (Reserved)	4	0x0004	No	No
24V FAILURE	8	0x0008	Yes	Yes
LOW SPEED OVER I	16	0x0010	No	Yes
PHASE FAIL	32	0x0020	No	Yes
ENCODER 1 FAULT	64	0x0040	Yes	Yes
DESAT (OVER I)	128	0x0080	No	Yes
VDC RIPPLE	256	0x0100	No	Yes
BRAKE SHORT CCT	512	0x0200	No	Yes
OVERSPEED	1024	0x0400	Yes	Yes
ANALOG INPUT ERR	2048	0x0800	No	Yes
INT DB RESISTOR	4096	0x1000	No	Yes
TRIP 30 (Reserved)	8192	0x2000	No	No
UNKNOWN	16384	0x4000	No	Yes
OTHER	32768	0x8000	No	Yes

Programming

The DISABLED WORD 3, ACTIVE WORD 3 and WARNINGS WORD 3 parameters use a four digit hexadecimal number to identify individual trips. Each trip has a unique corresponding number as shown below.

Trip Name (MMI)	Value	Mask EXT 1	User Disable	Auto-restart
NO TRIP	0	0x0000	N/A	N/A
MAX SPEED LOW	1	0x0001	Yes	N/A
MAINS VOLTS LOW	2	0x0002	Yes	N/A
NOT AT SPEED	4	0x0004	Yes	N/A
MAG CURRENT FAIL	8	0x0008	Yes	N/A
NEGATIVE SLIP F	16	0x0010	Yes	N/A
TR TOO LARGE	32	0x0020	Yes	N/A
TR TOO SMALL	64	0x0040	Yes	N/A
MAX RPM DATA ERR	128	0x0080	Yes	N/A
STACK TRIP	256	0x0100	N/A	N/A
LEAKGE L TIMEOUT	512	0x0200	Yes	N/A
POWER LOSS STOP	1024	0x0400	N/A	N/A
MOTR TURNING ERR	2048	0x0800	Yes	N/A
MOTR STALLED ERR	4096	0x1000	Yes	N/A
AT TORQ LIM ERR	8192	0x2000	Yes	N/A
FW ISR TIMEOUT	16384	0x4000	N/A	N/A
ENCODR CAL ERROR	32768	0x8000	Yes	N/A

The DISABLED WORD 4, ACTIVE WORD 4 and WARNINGS WORD 4 parameters use a four digit hexadecimal number to identify individual trips. Each trip has a unique corresponding number as shown below.

Trip Name (MMI)	Value	Mask EXT 1+	User Disable	Auto-restart
NO TRIP	0	0x0000	N/A	N/A
OUTPUT GBX ERROR	1	0x0001	Yes	N/A
APP HALTED	2	0x0002	N/A	N/A
APP ERROR	4	0x0004	N/A	N/A
FIRMWARE ERROR	8	0x0008	N/A	N/A
TRIP 53 (Reserved)	16	0x0010	N/A	N/A
TRIP 54 (Reserved)	32	0x0020	N/A	N/A
TRIP 55 (Reserved)	64	0x0040	N/A	N/A
TRIP 56 (Reserved)	128	0x0080	N/A	N/A
RESOLVER ERROR	256	0x0100	N/A	N/A
I2T MOTOR TRIP	512	0x0200	N/A	N/A
TRIP 59 (Reserved)	1024	0x0400	N/A	N/A
SAFE TORQUE OFF	2048	0x0800	N/A	N/A
TRIP 63 (Not Affected)	16384	0x4000	N/A	N/A
TRIP 64 (Not Affected)	32768	0x8000	N/A	N/A

Programming

The DISABLED WORD 5, ACTIVE WORD 5 and WARNINGS WORD 5 parameters use a four digit hexadecimal number to identify individual trips. Each trip has a unique corresponding number as shown below.

Trip Name (MMI)	Value	Mask EXT 2	User Disable	Auto-restart
NO TRIP	0	0x0000	N/A	N/A
TRIP 65 (Not Affected)	1	0x0001	N/A	N/A
TRIP 66 (Not Affected)	2	0x0002	N/A	N/A
TRIP 67 (Not Affected)	4	0x0004	N/A	N/A
TRIP 68 (Not Affected)	8	0x0008	N/A	N/A
TRIP 69 (Not Affected)	16	0x0010	N/A	N/A
TRIP 70 (Not Affected)	32	0x0020	N/A	N/A
TRIP 71 (Not Affected)	64	0x0040	N/A	N/A
TRIP 72 (Not Affected)	128	0x0080	N/A	N/A
TRIP 73 (Not Affected)	256	0x0100	N/A	N/A
TRIP 74 (Not Affected)	512	0x0200	N/A	N/A
TRIP 75 (Not Affected)	1024	0x0400	N/A	N/A
TRIP 76 (Not Affected)	2048	0x0800	N/A	N/A
TRIP 77 (Not Affected)	4096	0x1000	N/A	N/A
TRIP 78 (Not Affected)	8192	0x2000	N/A	N/A
TRIP 79 (Not Affected)	16384	0x4000	N/A	N/A
TRIP 80 (Not Affected)	32768	0x8000	N/A	N/A

The DISABLED WORD 6, ACTIVE WORD 6 and WARNINGS WORD 6 parameters use a four digit hexadecimal number to identify individual trips. Each trip has a unique corresponding number as shown below.

Trip Name (MMI)	Value	Mask EXT 2+	User Disable	Auto-restart
NO TRIP	0	0x0000	N/A	N/A
TRIP 81 (Not Affected)	1	0x0001	N/A	N/A
TRIP 82 (Not Affected)	2	0x0002	N/A	N/A
TRIP 83 (Not Affected)	4	0x0004	N/A	N/A
TRIP 84 (Not Affected)	8	0x0008	N/A	N/A
TRIP 85 (Not Affected)	16	0x0010	N/A	N/A
TRIP 86 (Not Affected)	32	0x0020	N/A	N/A
TRIP 87 (Not Affected)	64	0x0040	N/A	N/A
TRIP 88 (Not Affected)	128	0x0080	N/A	N/A
TRIP 89 (Not Affected)	256	0x0100	N/A	N/A
TRIP 90 (Not Affected)	512	0x0200	N/A	N/A
TRIP 91 (Not Affected)	1024	0x0400	N/A	N/A
TRIP 92 (Not Affected))	2048	0x0800	N/A	N/A
TRIP 93 (Not Affected))	4096	0x1000	N/A	N/A
TRIP 94 (Not Affected)	8192	0x2000	N/A	N/A
TRIP 95 (Not Affected)	16384	0x4000	N/A	N/A
TRIP 96 (Not Affected)	32768	0x8000	N/A	N/A

Hexadecimal Representation of Trips

Decimal number	Display
10	A
11	B
12	C
13	D
14	E
15	F

When more than one trip is to be represented at the same time then the trip codes are simply added together to form the value displayed. Within each digit, values between 10 and 15 are displayed as letters A to F

For example referring to the tables above, if the ACTIVE WORD 1 parameter is **02A8,** then this represents:

a "**2**" in digit 3

an "8" and a "2" in digit 2
(8+2 = 10, displayed as **A**)

an "**8**" in digit 1

This in turn represents the active trips BRAKE RESISTOR, MOTOR STALLED, INPUT 1 BREAK and HEATSINK TEMP, (an unlikely situation).

(In decimal representation, 02A8h is 680d

680 = 512 + 128 + 32 + 8

This in turn represents the active trips BRAKE RESISTOR, MOTOR STALLED, INPUT 1 BREAK and HEATSINK TEMP)

In the same way, the ACTIVE WORD 2 parameter displaying **02A8** would represent CURRENT LIMIT, DESAT (OVER I), TRIP 22 and 24V failure, (another unlikely situation).

The hexadecimal value is used over comms, however, pressing the M key whilst displaying the hexadecimal trip value will show the list of all trips and their current values

VIRTUAL MASTER

SETUP::PHASE CONTROL::VIRTUAL MASTER

This block transmits a regular update of speed, position and acceleration to all other drives listening on the selected channel. The output is profiled by the ACCELERATION, DECELERATION and JERK 1-4 parameters.

Refer to REFERENCE RAMP, page D-126.

An example acceleration graph for a velocity 60 %/s maximum, acceleration of 20 %/s^2 and a jerk of 10 %/s^3 is shown below.

Parameter Descriptions

CHANNEL *PREF: 118.17* *Default: 0* *Range: 0 to 64*

This parameter sets the Firewire channel that the Virtual Master broadcasts references on.

SOURCE *PREF: 118.20* *Default: S RAMP* *Range: See below*

Selects the source of the virtual master speed and position.

Enumerated Value : *Source*

0 : S RAMP	the virtual master output is derived from the INPUT parameter via an sramp function
1 : FEEDBACK POSN	the virtual master output is the motor shaft speed and position, unchanged
2 : REFERENCE ENCODR	the virtual master output is the reference encoder speed and position, unchanged
3 : LINEAR RAMP	the virtual master output is derived from the INPUT parameter, passed through a linear ramp function

INPUT *PREF: 118.01* *Default: 0.00 %* *Range: -100.00 to 100.00 %*

Ramp input.

ACCELERATION *PREF: 118.02* *Default: 10.00 /s²* *Range: 0.00 to 100.00 /s²*

Sets the acceleration rate in units of percent per second², i.e. if the full speed of the machine is 1.25m/s then the acceleration will be: 1.25 x 75.00% = 0.9375m/s²

DECELERATION *PREF: 118.03* *Default: 10.00 /s²* *Range: 0.00 to 100.00 /s²*

This functions in the same way as ACCELERATION above.

Parameter Descriptions

JERK 1 to JERK 4	*PREF: 118.04, 118.05, 118.06, 118.07*	*Default: 10.00 /s²*	*Range: 0.00 to 100.00 /s³*
Rate of change of acceleration for the relevant segment of the curve, i.e. JERK 1 is for segment 1, etc.			
CONTINUOUS	*PREF: 118.08*	*Default: FALSE*	*Range: FALSE / TRUE*
When TRUE, it forces a smooth transition if the speed point is changed when ramping. The curve is controlled by the ACCELERATION and JERK 1 to JERK 4 parameters. When FALSE, there is an immediate transition from the old curve to the new curve.			
HOLD	*PREF: 118.09*	*Default: FALSE*	*Range: FALSE / TRUE*
When TRUE, the output of the ramp is held at its last value.			
SYMMETRIC JERK	*PREF: 118.10*	*Default: FALSE*	*Range: FALSE / TRUE*
When TRUE, JERK 1 is used for all segments of the curve. JERK 2, JERK 3 and JERK 4 are ignored.			
RESET	*PREF: 118.11*	*Default: FALSE*	*Range: FALSE / TRUE*
If TRUE, the output is made equal to the input.			
OFFSET	*PREF: 118.12*	*Default: 0.0000 deg*	*Range: 0.0000 to 360.0000 deg*
This input provides an additional offset to be applied to the Position Output			
MAX SPEED	*PREF: 118.18*	*Default: 1500.0 rpm*	*Range: 100.0 to 6000.0 rpm*
This parameter specifies the maximum speed of the Virtual Master			
POSITION OUTPUT	*PREF: 118.14*	*Default: —.xxxx deg*	*Range: —.xxxx deg*
Master position output.			
SPEED OUTPUT	*PREF: 118.13*	*Default: —.xx Hz*	*Range: —.xx Hz*
Master speed output.			
ACCEL OUTPUT	*PREF: 118.15*	*Default: —.xx*	*Range: —.xx*
Master acceleration output in /s^2.			
RAMPING	*PREF: 118.16*	*Default: FALSE*	*Range: FALSE / TRUE*
This is set TRUE when ramping.			

Parameter Descriptions

STATUS *PREF: 118.19* *Default: 4* *Range: See below*

Operating status of the Virtual Master.

Enumerated Value : *Status*

0 : READY	operating correctly
1 : RESET	RESET input is FALSE
2 : DUPLICATE	another VIRTUAL MASTER has the same CHANNEL number
3 : INITIALISING	FireWire is present but state not yet known
4 : NO FIREWIRE	No FireWire Option fitted or no FireWire power supplied
5 : DISABLED	CHANNEL set to zero

Functional Description

The time needed to stop or accelerate is:

As the speed is symmetrical, the average speed is V/2 therefore the stopping / acceleration distance can be calculated:

$$s = \frac{V}{2}\left(\frac{V}{A} + \frac{A}{J}\right) \text{[Meters]} \qquad t = \frac{V}{A} + \frac{A}{J} \text{[Seconds]}$$

V *is the maximum speed the drive must reach in % / sec.*
A *is the maximum allowable acceleration in %/sec*^{2}.
J *is the maximum allowable value for jerk, in %/sec*^{3}

Note: These only hold true if Jerk = Jerk2 for acceleration or Jerk 3 = Jerk 4 for deceleration.

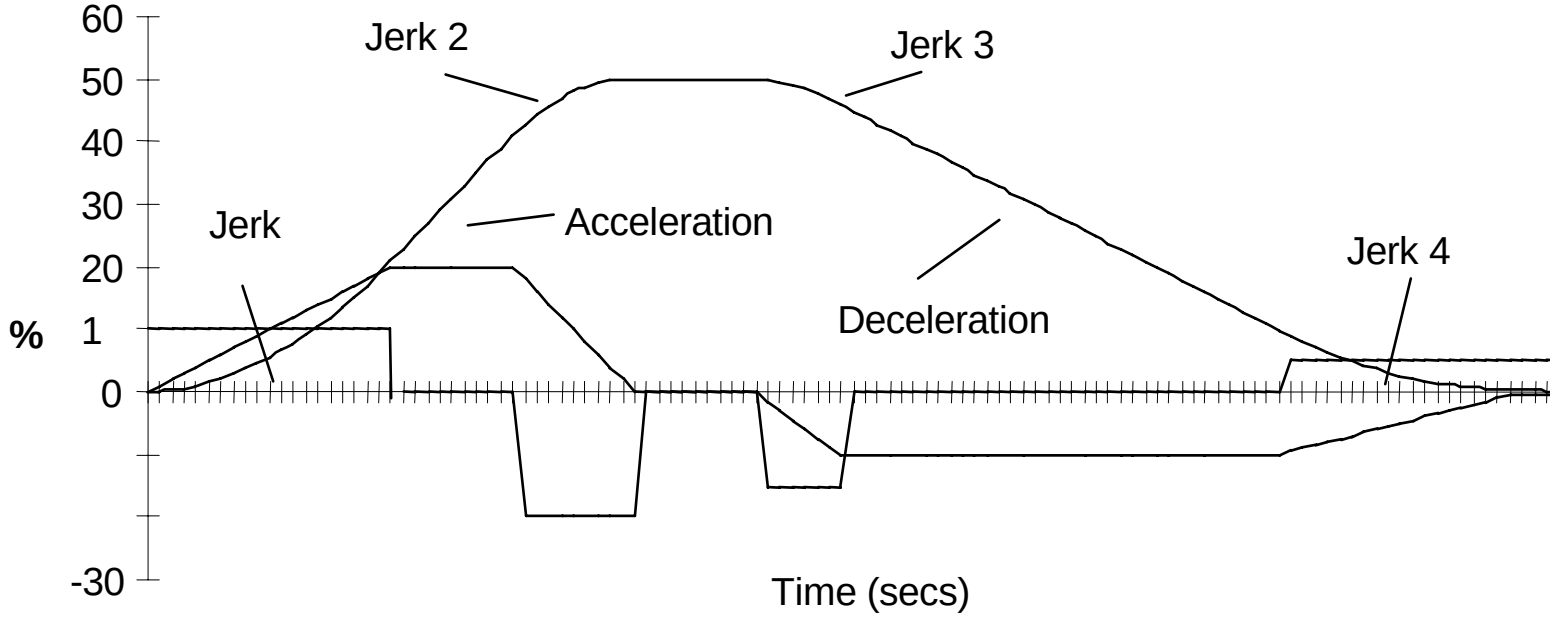
60
50
40
30
20
%
1
0
-30
Jerk 2
Jerk 3
Jerk
Acceleration
Jerk 4
Deceleration
Time (secs)

VOLTAGE CONTROL

SETUP::MOTOR CONTROL::VOLTAGE CONTROL

Designed for VOLTS/Hz motor Control Mode.

This function block allows the motor output volts to be controlled in the presence of dc link voltage variations. This is achieved by controlling the level of PWM modulation as a function of measured dc link volts. The dc link volts may vary either due to supply variations or regenerative braking by the motor.

Three control modes are available, None, Fixed and Automatic.

Parameter Descriptions

VOLTAGE MODE *PREF: 81.01* *Default: 0* *Range: See below*

Set to NONE, no attempt is made to control the PWM modulation depth for variations in dc link voltage.

Set to FIXED, the Drive's output volts are maintained, regardless of variations in the dc link voltage. The Drive's model number sets the default value for demanded maximum output voltage.

Set to AUTOMATIC, the voltage is controlled as above, but the output voltage is allowed to rise smoothly as dc link volts vary. This allows the motor to be overfluxed during deceleration, thereby increasing braking performance.

Enumerated Value : *Voltage Mode*

0 : NONE
1 : FIXED
2 : AUTOMATIC

BASE VOLTS *PREF: 81.03* *Default: 100.00 %* *Range: 0.00 to 115.47 %*

This parameter directly scales the output of the voltage control function block, thus allowing further scaling of the Drive output volts if required.

ZERO SPEED

SETUP::MOTOR CONTROL::ZERO SPEED

This function block detects when the motor speed is at or close to zero. HYSTERESIS and THRESHOLD are user-definable.

Parameter Descriptions

HYSTERISIS *PREF: 85.01* *Default: 0.10 %* *Range: 0.00 to 300.00 %*

Provides a hysteresis band about which the outputs are stable.

IF the hysteresis value is >= to the Threshold
THEN the level is set to 2 x the hysteresis value and the Off level is set to zero,
ELSE the On level = Threshold + Hysteresis and the Off level = Threshold - Hysteresis.

THRESHOLD *PREF: 85.02* *Default: 0.50 %* *Range: 0.00 to 300.00 %*

The nominal level below which the outputs are set.

AT ZERO SPD FBK *PREF: 85.03* *Default: TRUE* *Range: FALSE / TRUE*

Speed feedback. TRUE when at zero speed feedback, as defined by THRESHOLD and HYSTERESIS.

IF (abs(speed feedback)) > On Level at zero speed = FALSE
ELSE if (abs(speed feedback)) <= Off Level at zero speed = TRUE
ELSE at zero speed is unchanged

AT ZERO SPD DMD *PREF: 85.04* *Default: TRUE* *Range: FALSE / TRUE*

Speed demand. TRUE when at zero speed demand, as defined by THRESHOLD and HYSTERESIS.

AT STANDSTILL *PREF: 85.05* *Default: TRUE* *Range: FALSE / TRUE*

TRUE when both AT ZERO SPD FBK and AT ZERO SPD DMD are TRUE.

Functional Description

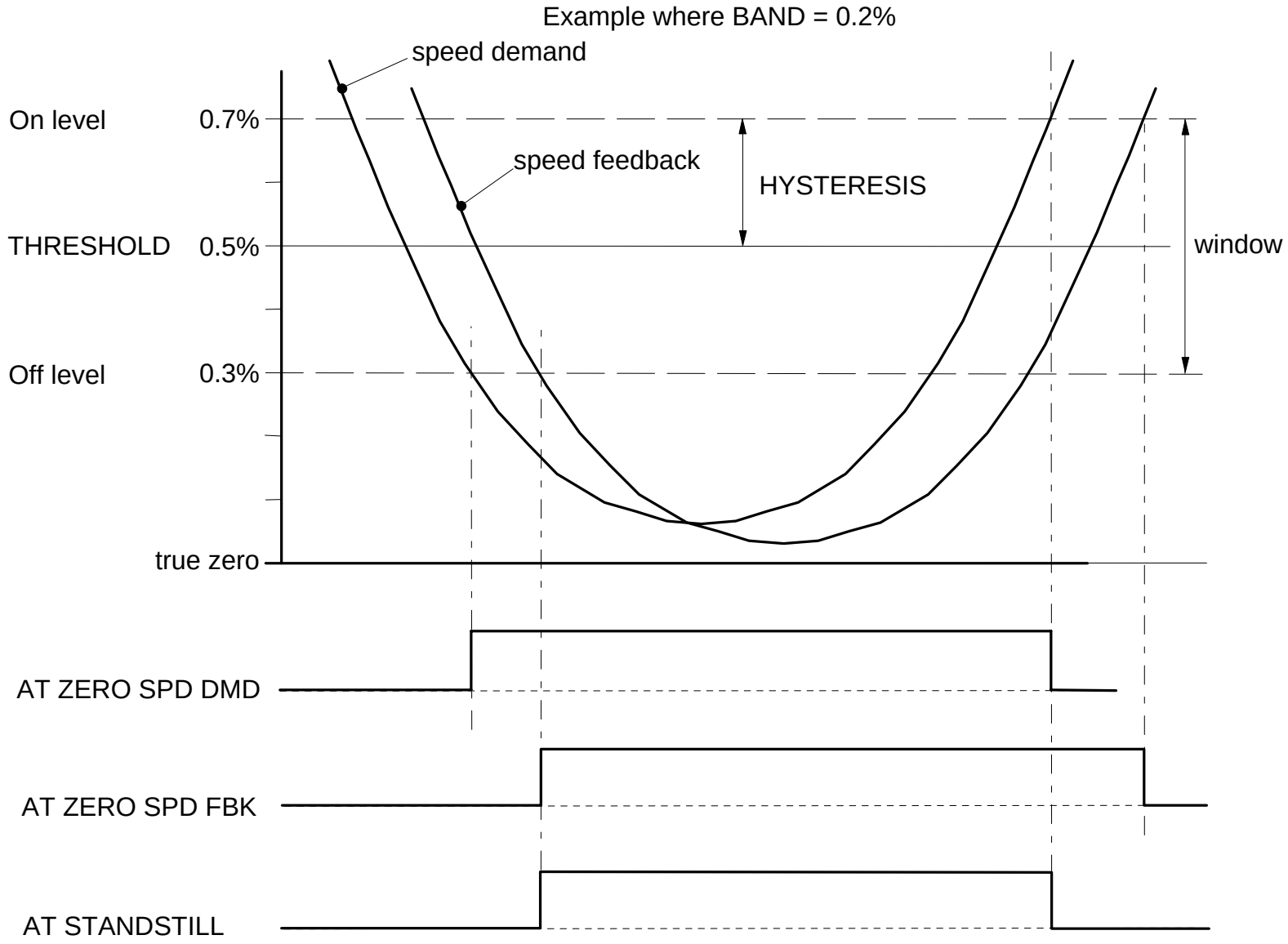

Parameter Specifications

The headings for the Parameter tables are described below.

PREF	A numeric identification of the parameter. It is used to identify the source and destinations of internal links.	
Name	The parameter name.	
Block	The menu page and function block under which the parameter is stored.	
Type	REAL	Floating point value
	INT	Integer value
	BOOL	A Boolean (bit) representing FALSE or TRUE
	ENUM	An enumerated value representing a selection
	STRING	An ASCII string
	WORD	16 Bit hexadecimal number
Range	This varies with parameter type:	
	REAL, INT	The upper and lower limits of the parameter
	BOOL	0 = FALSE, 1 = TRUE
	ENUM	A list of possible selections for that parameter
	STRING	Specified number of characters
	WORD	0000 to FFFF (hexadecimal), numbered lists show Bit numbers
	Note ***Decimal Places: "—" signifies an indeterminable number of units. An "x" signifies a decimal place, e.g. —.xx % could represent 100.00 %.***	
Default	The default value of the parameter.	
ro\rw	Denotes a Read-Only (ro) or Read-Write (rw) parameter.	

Notes	You can record your application's settings here. Output parameters are not saved in non-volatile memory unless indicated. 1. This input parameter is not saved in non-volatile memory. 2. This input parameter can only be written to when the drive is stopped. 3. The default value is dependent on the power board. 4. The default value is dependent on the frequency board. 5. This parameter is not set from DSE on a partial install.

Parameter Table: PREF Number Order

PREF	Name	Block	Type	Range	Default	ro\rw	Notes
1.03	TYPE	ANALOG INPUT 1	ENUM	0 : -10..+10 V 1 : 0..+10 V	-10..+10 V	rw	
1.06	VALUE	ANALOG INPUT 1	REAL	_.x	100.0 %	ro	Output
2.03	TYPE	ANALOG INPUT 2	ENUM	0 : -10..+10 V 1 : 0..+10 V	-10..+10 V	rw	
2.06	VALUE	ANALOG INPUT 2	REAL	_.x	100.0 %	ro	Output
3.03	TYPE	ANALOG INPUT 3	ENUM	0 : -10..+10 V 1 : 0..+10 V 2 : 0..20 mA 3 : 4..20 mA	-10..+10 V	rw	
3.04	BREAK ENABLE	ANALOG INPUT 3	BOOL	0 : FALSE 1 : TRUE	FALSE	rw	
3.05	BREAK VALUE	ANALOG INPUT 3	REAL	-300.00 to 300.00 %	0.00 %	rw	
3.06	VALUE	ANALOG INPUT 3	REAL	_.x	100.0 %	ro	Output
3.07	BREAK	ANALOG INPUT 3	BOOL	0 : FALSE 1 : TRUE	FALSE	ro	Output
4.03	TYPE	ANALOG INPUT 4	ENUM	0 : -10..+10 V 1 : 0..+10 V 2 : 0..20 mA 3 : 4..20 mA	-10..+10 V	rw	
4.04	BREAK ENABLE	ANALOG INPUT 4	BOOL	0 : FALSE 1 : TRUE	FALSE	rw	
4.05	BREAK VALUE	ANALOG INPUT 4	REAL	-300.00 to 300.00 %	0.00 %	rw	
4.06	VALUE	ANALOG INPUT 4	REAL	_.x	100.0 %	ro	Output
4.07	BREAK	ANALOG INPUT 4	BOOL	0 : FALSE 1 : TRUE	FALSE	ro	Output
5.06	VALUE	ANALOG INPUT 5	REAL	_.x	0.0 %	ro	Output

PREF	Name	Block	Type	Range	Default	ro\rw	Notes
6.01	VALUE	ANALOG OUTPUT 1	REAL	-300.00 to 300.00 %	0.00 %	rw	1
6.05	TYPE	ANALOG OUTPUT 1	ENUM	0 : -10..+10 V 1 : 0..+10 V	0..+10 V	rw	
7.01	VALUE	ANALOG OUTPUT 2	REAL	-300.00 to 300.00 %	0.00 %	rw	1
7.05	TYPE	ANALOG OUTPUT 2	ENUM	0 : -10..+10 V 1 : 0..+10 V	0..+10 V	rw	
8.02	VALUE	DIGITAL INPUT 1	BOOL	0 : FALSE 1 : TRUE	FALSE	ro	Output
9.02	VALUE	DIGITAL INPUT 2	BOOL	0 : FALSE 1 : TRUE	FALSE	ro	Output
10.02	VALUE	DIGITAL INPUT 3	BOOL	0 : FALSE 1 : TRUE	FALSE	ro	Output
11.02	VALUE	DIGITAL INPUT 4	BOOL	0 : FALSE 1 : TRUE	FALSE	ro	Output
12.02	VALUE	DIGITAL INPUT 5	BOOL	0 : FALSE 1 : TRUE	FALSE	ro	Output
13.02	VALUE	DIGITAL INPUT 6	BOOL	0 : FALSE 1 : TRUE	FALSE	ro	Output
14.02	VALUE	DIGITAL INPUT 7	BOOL	0 : FALSE 1 : TRUE	FALSE	ro	Output
15.02	VALUE	DIGITAL INPUT 8	BOOL	0 : FALSE 1 : TRUE	FALSE	ro	Output
16.02	VALUE	DIGITAL INPUT 9	BOOL	0 : FALSE 1 : TRUE	FALSE	ro	Output
17.01	VALUE	DIGITAL OUTPUT 1	BOOL	0 : FALSE 1 : TRUE	FALSE	rw	1
18.01	VALUE	DIGITAL OUTPUT 2	BOOL	0 : FALSE 1 : TRUE	FALSE	rw	1
19.01	VALUE	DIGITAL OUTPUT 3	BOOL	0 : FALSE 1 : TRUE	FALSE	rw	1

PREF	Name	Block	Type	Range	Default	ro\rw	Notes
21.01	V/F SHAPE	FLUXING	ENUM	0 : LINEAR LAW 1 : FAN LAW 2 : USER DEFINED	LINEAR LAW	rw	
21.02	BASE FREQUENCY	FLUXING	REAL	7.5 to 500.0 Hz	50.0 Hz	rw	1,4
21.03	FIXED BOOST	FLUXING	REAL	0.00 to 25.00 %	0.00 %	rw	3
21.04	AUTO BOOST	FLUXING	REAL	0.00 to 25.00 %	0.00 %	rw	
21.08	ACCELRTN BOOST	FLUXING	REAL	0.00 to 25.00 %	0.00 %	rw	
21.09	ENERGY SAVING	FLUXING	BOOL	0 : FALSE 1 : TRUE	FALSE	rw	
21.10	USER FREQ 1	FLUXING	REAL	0.0 to 100.0 %	10.0 %	rw	
21.11	USER VOLTAGE 1	FLUXING	REAL	0.0 to 100.0 %	10.0 %	rw	
21.12	USER FREQ 2	FLUXING	REAL	0.0 to 100.0 %	20.0 %	rw	
21.13	USER VOLTAGE 2	FLUXING	REAL	0.0 to 100.0 %	20.0 %	rw	
21.14	USER FREQ 3	FLUXING	REAL	0.0 to 100.0 %	30.0 %	rw	
21.15	USER VOLTAGE 3	FLUXING	REAL	0.0 to 100.0 %	30.0 %	rw	
21.16	USER FREQ 4	FLUXING	REAL	0.0 to 100.0 %	40.0 %	rw	
21.17	USER VOLTAGE 4	FLUXING	REAL	0.0 to 100.0 %	40.0 %	rw	
21.18	USER FREQ 5	FLUXING	REAL	0.0 to 100.0 %	50.0 %	rw	
21.19	USER VOLTAGE 5	FLUXING	REAL	0.0 to 100.0 %	50.0 %	rw	
21.20	USER FREQ 6	FLUXING	REAL	0.0 to 100.0 %	60.0 %	rw	
21.21	USER VOLTAGE 6	FLUXING	REAL	0.0 to 100.0 %	60.0 %	rw	
21.22	USER FREQ 7	FLUXING	REAL	0.0 to 100.0 %	70.0 %	rw	
21.23	USER VOLTAGE 7	FLUXING	REAL	0.0 to 100.0 %	70.0 %	rw	
21.24	USER FREQ 8	FLUXING	REAL	0.0 to 100.0 %	80.0 %	rw	
21.25	USER VOLTAGE 8	FLUXING	REAL	0.0 to 100.0 %	80.0 %	rw	
21.26	USER FREQ 9	FLUXING	REAL	0.0 to 100.0 %	90.0 %	rw	
21.27	USER VOLTAGE 9	FLUXING	REAL	0.0 to 100.0 %	90.0 %	rw	

PREF	Name	Block	Type	Range	Default	ro\rw	Notes
21.28	USER FREQ 10	FLUXING	REAL	0.0 to 100.0 %	100.0 %	rw	
21.29	USER VOLTAGE 10	FLUXING	REAL	0.0 to 100.0 %	100.0 %	rw	
22.01	ENABLE	SLEW RATE LIMIT	BOOL	0 : FALSE 1 : TRUE	TRUE	rw	
22.02	ACCEL LIMIT	SLEW RATE LIMIT	REAL	1.0 to 1200.0 Hz/s	500.0 Hz/s	rw	
22.03	DECEL LIMIT	SLEW RATE LIMIT	REAL	1.0 to 1200.0 Hz/s	500.0 Hz/s	rw	
23.01	ENABLE	SLIP COMP	BOOL	0 : FALSE 1 : TRUE	FALSE	rw	2
23.02	MOTORING LIMIT	SLIP COMP	REAL	0.0 to 600.0 RPM	150.0 RPM	rw	5
23.03	REGEN LIMIT	SLIP COMP	REAL	0.0 to 600.0 RPM	150.0 RPM	rw	5
25.01	ENABLE	STABILISATION	BOOL	0 : FALSE 1 : TRUE	TRUE	rw	
27.01	CONTROL MODE	MOTOR INDUCTION	ENUM	0 : VOLTS / Hz 1 : SENSORLESS VEC 2 : CLOSED-LOOP VEC	VOLTS / Hz	rw	2
27.02	POWER	MOTOR INDUCTION	REAL	0.00 to 3000.00 kW	30.00 kW	rw	3
27.03	BASE FREQUENCY	MOTOR INDUCTION	REAL	7.5 to 1000.0 Hz	50.0 Hz	rw	2,4
27.04	MOTOR VOLTAGE	MOTOR INDUCTION	REAL	0.0 to 690.0 V	400.0 V	rw	3,4
27.05	MOTOR CURRENT	MOTOR INDUCTION	REAL	0.00 to 3276.70 A	54.00 A	rw	2,3
27.06	MAG CURRENT	MOTOR INDUCTION	REAL	0.00 to 3276.70 A	16.20 A	rw	3
27.07	NAMEPLATE RPM	MOTOR INDUCTION	REAL	0.0 to 30000.0 RPM	1470.0 RPM	rw	3,4
27.08	MOTOR CONNECTION	MOTOR INDUCTION	ENUM	0 : DELTA 1 : STAR	STAR	rw	3,4
27.09	MOTOR POLES	MOTOR INDUCTION	ENUM	0 : 2 POLE 1 : 4 POLE 2 : 6 POLE 3 : 8 POLE 4 : 10 POLE 5 : 12 POLE	4 POLE	rw	

PREF	Name	Block	Type	Range	Default	ro\rw	Notes
27.10	POWER FACTOR	MOTOR INDUCTION	REAL	0.50 to 0.99	0.86	rw	3
27.11	OVERLOAD	MOTOR INDUCTION	REAL	1.0 to 5.0	2.0	rw	3
27.14	STATOR RES	MOTOR INDUCTION	REAL	0.0000 to 250.0000 Ohm	0.2851 Ohm	rw	3,5
27.15	LEAKAGE INDUC	MOTOR INDUCTION	REAL	0.00 to 300.00 mH	9.08 mH	rw	3,5
27.16	MUTUAL INDUC	MOTOR INDUCTION	REAL	0.00 to 3000.00 mH	36.30 mH	rw	3,5
27.17	ROTOR TIME CONST	MOTOR INDUCTION	REAL	10.00 to 30000.00 ms	506.08 ms	rw	3,5
27.23	TOTAL INERTIA	MOTOR INDUCTION	REAL	0.0000 to 300.0000 kgm2	0.0000 kgm2	rw	5
27.24	SUPPLY VOLTAGE	MOTOR INDUCTION	ENUM	0 : 230V 1 : 380V TO 460V 2 : 500V 3 : 575V 4 : 690V	380V TO 460V	rw	3
29.01	DEFLUX TIME	INJ BRAKING	REAL	0.1 to 20.0 s	1.0 s	rw	3,5
29.02	FREQUENCY	INJ BRAKING	REAL	1.0 to 500.0 Hz	6.0 Hz	rw	3,5
29.03	I-LIM LEVEL	INJ BRAKING	REAL	50.00 to 150.00 %	100.00 %	rw	
29.04	DC PULSE	INJ BRAKING	REAL	0.0 to 100.0 s	2.0 s	rw	3,5
29.05	FINAL DC PULSE	INJ BRAKING	REAL	0.0 to 10.0 s	3.0 s	rw	3,5
29.06	DC LEVEL	INJ BRAKING	REAL	0.00 to 25.00 %	1.25 %	rw	3,5
29.07	TIMEOUT	INJ BRAKING	REAL	0.0 to 600.0 s	90.0 s	rw	
29.08	BASE VOLTS	INJ BRAKING	REAL	0.00 to 115.47 %	75.00 %	rw	3,5
29.09	ACTIVE	INJ BRAKING	BOOL	0 : FALSE 1 : TRUE	FALSE	ro	Output
30.01	ENABLED KEYS	OP STATION	WORD	0000 to FFFF	00F0	rw	
30.02	OP VERSION	OP STATION	WORD	0000 to FFFF	0000	ro	Output
30.03	OP DATABASE	OP STATION	BOOL	0 : FALSE 1 : TRUE	FALSE	ro	Output

PREF	Name	Block	Type	Range	Default	ro\rw	Notes
31.01	VIEW LEVEL	ACCESS CONTROL	ENUM	0 : OPERATOR 1 : BASIC 2 : ADVANCED	BASIC	rw	
31.02	PASSWORD	ACCESS CONTROL	WORD	0000 to FFFF	0000	rw	
31.05	CONFIG NAME	ACCESS CONTROL	STRING	max length is 16 chars		rw	
31.06	STARTUP SCREEN	ACCESS CONTROL	INT	0 to 32	0	rw	
32.02	NAME	SETPOINT DISPLAY	STRING	max length is 16 chars		rw	
32.03	SCALING	SETPOINT DISPLAY	ENUM	0 : NONE 1 : DISPLAY SCALE 1 2 : DISPLAY SCALE 2 3 : DISPLAY SCALE 3 4 : DISPLAY SCALE 4	NONE	rw	
32.05	IGNORE PASSWORD	SETPOINT DISPLAY	BOOL	0 : FALSE 1 : TRUE	TRUE	rw	
33.01	PARAMETER	OPERATOR MENU 1	PREF	00.00 to A5.15	0	rw	
33.02	NAME	OPERATOR MENU 1	STRING	max length is 16 chars		rw	
33.03	SCALING	OPERATOR MENU 1	ENUM	0 : NONE 1 : DISPLAY SCALE 1 2 : DISPLAY SCALE 2 3 : DISPLAY SCALE 3 4 : DISPLAY SCALE 4	NONE	rw	
33.04	READ ONLY	OPERATOR MENU 1	BOOL	0 : FALSE 1 : TRUE	FALSE	rw	
33.05	IGNORE PASSWORD	OPERATOR MENU 1	BOOL	0 : FALSE 1 : TRUE	FALSE	rw	
34.01	PARAMETER	OPERATOR MENU 2	PREF	00.00 to A5.15	0	rw	
34.02	NAME	OPERATOR MENU 2	STRING	max length is 16 chars		rw	

PREF	Name	Block	Type	Range	Default	ro\rw	Notes
34.03	SCALING	OPERATOR MENU 2	ENUM	0 : NONE 1 : DISPLAY SCALE 1 2 : DISPLAY SCALE 2 3 : DISPLAY SCALE 3 4 : DISPLAY SCALE 4	NONE	rw	
34.04	READ ONLY	OPERATOR MENU 2	BOOL	0 : FALSE 1 : TRUE	FALSE	rw	
34.05	IGNORE PASSWORD	OPERATOR MENU 2	BOOL	0 : FALSE 1 : TRUE	FALSE	rw	
35.01	PARAMETER	OPERATOR MENU 3	PREF	00.00 to A5.15	0	rw	
35.02	NAME	OPERATOR MENU 3	STRING	max length is 16 chars		rw	
35.03	SCALING	OPERATOR MENU 3	ENUM	0 : NONE 1 : DISPLAY SCALE 1 2 : DISPLAY SCALE 2 3 : DISPLAY SCALE 3 4 : DISPLAY SCALE 4	NONE	rw	
35.04	READ ONLY	OPERATOR MENU 3	BOOL	0 : FALSE 1 : TRUE	FALSE	rw	
35.05	IGNORE PASSWORD	OPERATOR MENU 3	BOOL	0 : FALSE 1 : TRUE	FALSE	rw	
36.01	PARAMETER	OPERATOR MENU 4	PREF	00.00 to A5.15	0	rw	
36.02	NAME	OPERATOR MENU 4	STRING	max length is 16 chars		rw	
36.03	SCALING	OPERATOR MENU 4	ENUM	0 : NONE 1 : DISPLAY SCALE 1 2 : DISPLAY SCALE 2 3 : DISPLAY SCALE 3 4 : DISPLAY SCALE 4	NONE	rw	
36.04	READ ONLY	OPERATOR MENU 4	BOOL	0 : FALSE 1 : TRUE	FALSE	rw	
36.05	IGNORE PASSWORD	OPERATOR MENU 4	BOOL	0 : FALSE 1 : TRUE	FALSE	rw	

PREF	Name	Block	Type	Range	Default	ro\rw	Notes
37.01	PARAMETER	OPERATOR MENU 5	PREF	00.00 to A5.15	0	rw	
37.02	NAME	OPERATOR MENU 5	STRING	max length is 16 chars		rw	
37.03	SCALING	OPERATOR MENU 5	ENUM	0 : NONE 1 : DISPLAY SCALE 1 2 : DISPLAY SCALE 2 3 : DISPLAY SCALE 3 4 : DISPLAY SCALE 4	NONE	rw	
37.04	READ ONLY	OPERATOR MENU 5	BOOL	0 : FALSE 1 : TRUE	FALSE	rw	
37.05	IGNORE PASSWORD	OPERATOR MENU 5	BOOL	0 : FALSE 1 : TRUE	FALSE	rw	
38.01	PARAMETER	OPERATOR MENU 6	PREF	00.00 to A5.15	0	rw	
38.02	NAME	OPERATOR MENU 6	STRING	max length is 16 chars		rw	
38.03	SCALING	OPERATOR MENU 6	ENUM	0 : NONE 1 : DISPLAY SCALE 1 2 : DISPLAY SCALE 2 3 : DISPLAY SCALE 3 4 : DISPLAY SCALE 4	NONE	rw	
38.04	READ ONLY	OPERATOR MENU 6	BOOL	0 : FALSE 1 : TRUE	FALSE	rw	
38.05	IGNORE PASSWORD	OPERATOR MENU 6	BOOL	0 : FALSE 1 : TRUE	FALSE	rw	
39.01	PARAMETER	OPERATOR MENU 7	PREF	00.00 to A5.15	0	rw	
39.02	NAME	OPERATOR MENU 7	STRING	max length is 16 chars		rw	
39.03	SCALING	OPERATOR MENU 7	ENUM	0 : NONE 1 : DISPLAY SCALE 1 2 : DISPLAY SCALE 2 3 : DISPLAY SCALE 3 4 : DISPLAY SCALE 4	NONE	rw	
39.04	READ ONLY	OPERATOR MENU 7	BOOL	0 : FALSE 1 : TRUE	FALSE	rw	

PREF	Name	Block	Type	Range	Default	ro\rw	Notes
39.05	IGNORE PASSWORD	OPERATOR MENU 7	BOOL	0 : FALSE 1 : TRUE	FALSE	rw	
40.01	PARAMETER	OPERATOR MENU 8	PREF	00.00 to A5.15	0	rw	
40.02	NAME	OPERATOR MENU 8	STRING	max length is 16 chars		rw	
40.03	SCALING	OPERATOR MENU 8	ENUM	0 : NONE 1 : DISPLAY SCALE 1 2 : DISPLAY SCALE 2 3 : DISPLAY SCALE 3 4 : DISPLAY SCALE 4	NONE	rw	
40.04	READ ONLY	OPERATOR MENU 8	BOOL	0 : FALSE 1 : TRUE	FALSE	rw	
40.05	IGNORE PASSWORD	OPERATOR MENU 8	BOOL	0 : FALSE 1 : TRUE	FALSE	rw	
41.01	PARAMETER	OPERATOR MENU 9	PREF	00.00 to A5.15	0	rw	
41.02	NAME	OPERATOR MENU 9	STRING	max length is 16 chars		rw	
41.03	SCALING	OPERATOR MENU 9	ENUM	0 : NONE 1 : DISPLAY SCALE 1 2 : DISPLAY SCALE 2 3 : DISPLAY SCALE 3 4 : DISPLAY SCALE 4	NONE	rw	
41.04	READ ONLY	OPERATOR MENU 9	BOOL	0 : FALSE 1 : TRUE	FALSE	rw	
41.05	IGNORE PASSWORD	OPERATOR MENU 9	BOOL	0 : FALSE 1 : TRUE	FALSE	rw	
42.01	PARAMETER	OPERATOR MENU 10	PREF	00.00 to A5.15	0	rw	
42.02	NAME	OPERATOR MENU 10	STRING	max length is 16 chars		rw	
42.03	SCALING	OPERATOR MENU 10	ENUM	0 : NONE 1 : DISPLAY SCALE 1 2 : DISPLAY SCALE 2 3 : DISPLAY SCALE 3 4 : DISPLAY SCALE 4	NONE	rw	

PREF	Name	Block	Type	Range	Default	ro\rw	Notes
42.04	READ ONLY	OPERATOR MENU 10	BOOL	0 : FALSE 1 : TRUE	FALSE	rw	
42.05	IGNORE PASSWORD	OPERATOR MENU 10	BOOL	0 : FALSE 1 : TRUE	FALSE	rw	
43.01	PARAMETER	OPERATOR MENU 11	PREF	00.00 to A5.15	0	rw	
43.02	NAME	OPERATOR MENU 11	STRING	max length is 16 chars		rw	
43.03	SCALING	OPERATOR MENU 11	ENUM	0 : NONE 1 : DISPLAY SCALE 1 2 : DISPLAY SCALE 2 3 : DISPLAY SCALE 3 4 : DISPLAY SCALE 4	NONE	rw	
43.04	READ ONLY	OPERATOR MENU 11	BOOL	0 : FALSE 1 : TRUE	FALSE	rw	
43.05	IGNORE PASSWORD	OPERATOR MENU 11	BOOL	0 : FALSE 1 : TRUE	FALSE	rw	
44.01	PARAMETER	OPERATOR MENU 12	PREF	00.00 to A5.15	0	rw	
44.02	NAME	OPERATOR MENU 12	STRING	max length is 16 chars		rw	
44.03	SCALING	OPERATOR MENU 12	ENUM	0 : NONE 1 : DISPLAY SCALE 1 2 : DISPLAY SCALE 2 3 : DISPLAY SCALE 3 4 : DISPLAY SCALE 4	NONE	rw	
44.04	READ ONLY	OPERATOR MENU 12	BOOL	0 : FALSE 1 : TRUE	FALSE	rw	
44.05	IGNORE PASSWORD	OPERATOR MENU 12	BOOL	0 : FALSE 1 : TRUE	FALSE	rw	
45.01	PARAMETER	OPERATOR MENU 13	PREF	00.00 to A5.15	0	rw	
45.02	NAME	OPERATOR MENU 13	STRING	max length is 16 chars		rw	

PREF	Name	Block	Type	Range	Default	ro\rw	Notes
45.03	SCALING	OPERATOR MENU 13	ENUM	0 : NONE 1 : DISPLAY SCALE 1 2 : DISPLAY SCALE 2 3 : DISPLAY SCALE 3 4 : DISPLAY SCALE 4	NONE	rw	
45.04	READ ONLY	OPERATOR MENU 13	BOOL	0 : FALSE 1 : TRUE	FALSE	rw	
45.05	IGNORE PASSWORD	OPERATOR MENU 13	BOOL	0 : FALSE 1 : TRUE	FALSE	rw	
46.01	PARAMETER	OPERATOR MENU 14	PREF	00.00 to A5.15	0	rw	
46.02	NAME	OPERATOR MENU 14	STRING	max length is 16 chars		rw	
46.03	SCALING	OPERATOR MENU 14	ENUM	0 : NONE 1 : DISPLAY SCALE 1 2 : DISPLAY SCALE 2 3 : DISPLAY SCALE 3 4 : DISPLAY SCALE 4	NONE	rw	
46.04	READ ONLY	OPERATOR MENU 14	BOOL	0 : FALSE 1 : TRUE	FALSE	rw	
46.05	IGNORE PASSWORD	OPERATOR MENU 14	BOOL	0 : FALSE 1 : TRUE	FALSE	rw	
47.01	PARAMETER	OPERATOR MENU 15	PREF	00.00 to A5.15	0	rw	
47.02	NAME	OPERATOR MENU 15	STRING	max length is 16 chars		rw	
47.03	SCALING	OPERATOR MENU 15	ENUM	0 : NONE 1 : DISPLAY SCALE 1 2 : DISPLAY SCALE 2 3 : DISPLAY SCALE 3 4 : DISPLAY SCALE 4	NONE	rw	
47.04	READ ONLY	OPERATOR MENU 15	BOOL	0 : FALSE 1 : TRUE	FALSE	rw	
47.05	IGNORE PASSWORD	OPERATOR MENU 15	BOOL	0 : FALSE 1 : TRUE	FALSE	rw	

PREF	Name	Block	Type	Range	Default	ro\rw	Notes
48.01	PARAMETER	OPERATOR MENU 16	PREF	00.00 to A5.15	0	rw	
48.02	NAME	OPERATOR MENU 16	STRING	max length is 16 chars		rw	
48.03	SCALING	OPERATOR MENU 16	ENUM	0 : NONE 1 : DISPLAY SCALE 1 2 : DISPLAY SCALE 2 3 : DISPLAY SCALE 3 4 : DISPLAY SCALE 4	NONE	rw	
48.04	READ ONLY	OPERATOR MENU 16	BOOL	0 : FALSE 1 : TRUE	FALSE	rw	
48.05	IGNORE PASSWORD	OPERATOR MENU 16	BOOL	0 : FALSE 1 : TRUE	FALSE	rw	
49.01	PARAMETER	OPERATOR MENU 17	PREF	00.00 to A5.15	0	rw	
49.02	NAME	OPERATOR MENU 17	STRING	max length is 16 chars		rw	
49.03	SCALING	OPERATOR MENU 17	ENUM	0 : NONE 1 : DISPLAY SCALE 1 2 : DISPLAY SCALE 2 3 : DISPLAY SCALE 3 4 : DISPLAY SCALE 4	NONE	rw	
49.04	READ ONLY	OPERATOR MENU 17	BOOL	0 : FALSE 1 : TRUE	FALSE	rw	
49.05	IGNORE PASSWORD	OPERATOR MENU 17	BOOL	0 : FALSE 1 : TRUE	FALSE	rw	
50.01	PARAMETER	OPERATOR MENU 18	PREF	00.00 to A5.15	0	rw	
50.02	NAME	OPERATOR MENU 18	STRING	max length is 16 chars		rw	
50.03	SCALING	OPERATOR MENU 18	ENUM	0 : NONE 1 : DISPLAY SCALE 1 2 : DISPLAY SCALE 2 3 : DISPLAY SCALE 3 4 : DISPLAY SCALE 4	NONE	rw	
50.04	READ ONLY	OPERATOR MENU 18	BOOL	0 : FALSE 1 : TRUE	FALSE	rw	

PREF	Name	Block	Type	Range	Default	ro\rw	Notes
50.05	IGNORE PASSWORD	OPERATOR MENU 18	BOOL	0 : FALSE 1 : TRUE	FALSE	rw	
51.01	PARAMETER	OPERATOR MENU 19	PREF	00.00 to A5.15	0	rw	
51.02	NAME	OPERATOR MENU 19	STRING	max length is 16 chars		rw	
51.03	SCALING	OPERATOR MENU 19	ENUM	0 : NONE 1 : DISPLAY SCALE 1 2 : DISPLAY SCALE 2 3 : DISPLAY SCALE 3 4 : DISPLAY SCALE 4	NONE	rw	
51.04	READ ONLY	OPERATOR MENU 19	BOOL	0 : FALSE 1 : TRUE	FALSE	rw	
51.05	IGNORE PASSWORD	OPERATOR MENU 19	BOOL	0 : FALSE 1 : TRUE	FALSE	rw	
52.01	PARAMETER	OPERATOR MENU 20	PREF	00.00 to A5.15	0	rw	
52.02	NAME	OPERATOR MENU 20	STRING	max length is 16 chars		rw	
52.03	SCALING	OPERATOR MENU 20	ENUM	0 : NONE 1 : DISPLAY SCALE 1 2 : DISPLAY SCALE 2 3 : DISPLAY SCALE 3 4 : DISPLAY SCALE 4	NONE	rw	
52.04	READ ONLY	OPERATOR MENU 20	BOOL	0 : FALSE 1 : TRUE	FALSE	rw	
52.05	IGNORE PASSWORD	OPERATOR MENU 20	BOOL	0 : FALSE 1 : TRUE	FALSE	rw	
53.01	PARAMETER	OPERATOR MENU 21	PREF	00.00 to A5.15	0	rw	
53.02	NAME	OPERATOR MENU 21	STRING	max length is 16 chars		rw	
53.03	SCALING	OPERATOR MENU 21	ENUM	0 : NONE 1 : DISPLAY SCALE 1 2 : DISPLAY SCALE 2 3 : DISPLAY SCALE 3 4 : DISPLAY SCALE 4	NONE	rw	

PREF	Name	Block	Type	Range	Default	ro\rw	Notes
53.04	READ ONLY	OPERATOR MENU 21	BOOL	0 : FALSE 1 : TRUE	FALSE	rw	
53.05	IGNORE PASSWORD	OPERATOR MENU 21	BOOL	0 : FALSE 1 : TRUE	FALSE	rw	
54.01	PARAMETER	OPERATOR MENU 22	PREF	00.00 to A5.15	0	rw	
54.02	NAME	OPERATOR MENU 22	STRING	max length is 16 chars		rw	
54.03	SCALING	OPERATOR MENU 22	ENUM	0 : NONE 1 : DISPLAY SCALE 1 2 : DISPLAY SCALE 2 3 : DISPLAY SCALE 3 4 : DISPLAY SCALE 4	NONE	rw	
54.04	READ ONLY	OPERATOR MENU 22	BOOL	0 : FALSE 1 : TRUE	FALSE	rw	
54.05	IGNORE PASSWORD	OPERATOR MENU 22	BOOL	0 : FALSE 1 : TRUE	FALSE	rw	
55.01	PARAMETER	OPERATOR MENU 23	PREF	00.00 to A5.15	0	rw	
55.02	NAME	OPERATOR MENU 23	STRING	max length is 16 chars		rw	
55.03	SCALING	OPERATOR MENU 23	ENUM	0 : NONE 1 : DISPLAY SCALE 1 2 : DISPLAY SCALE 2 3 : DISPLAY SCALE 3 4 : DISPLAY SCALE 4	NONE	rw	
55.04	READ ONLY	OPERATOR MENU 23	BOOL	0 : FALSE 1 : TRUE	FALSE	rw	
55.05	IGNORE PASSWORD	OPERATOR MENU 23	BOOL	0 : FALSE 1 : TRUE	FALSE	rw	
56.01	PARAMETER	OPERATOR MENU 24	PREF	00.00 to A5.15	0	rw	
56.02	NAME	OPERATOR MENU 24	STRING	max length is 16 chars		rw	

PREF	Name	Block	Type	Range	Default	ro\rw	Notes
56.03	SCALING	OPERATOR MENU 24	ENUM	0 : NONE 1 : DISPLAY SCALE 1 2 : DISPLAY SCALE 2 3 : DISPLAY SCALE 3 4 : DISPLAY SCALE 4	NONE	rw	
56.04	READ ONLY	OPERATOR MENU 24	BOOL	0 : FALSE 1 : TRUE	FALSE	rw	
56.05	IGNORE PASSWORD	OPERATOR MENU 24	BOOL	0 : FALSE 1 : TRUE	FALSE	rw	
57.01	PARAMETER	OPERATOR MENU 25	PREF	00.00 to A5.15	0	rw	
57.02	NAME	OPERATOR MENU 25	STRING	max length is 16 chars		rw	
57.03	SCALING	OPERATOR MENU 25	ENUM	0 : NONE 1 : DISPLAY SCALE 1 2 : DISPLAY SCALE 2 3 : DISPLAY SCALE 3 4 : DISPLAY SCALE 4	NONE	rw	
57.04	READ ONLY	OPERATOR MENU 25	BOOL	0 : FALSE 1 : TRUE	FALSE	rw	
57.05	IGNORE PASSWORD	OPERATOR MENU 25	BOOL	0 : FALSE 1 : TRUE	FALSE	rw	
58.01	PARAMETER	OPERATOR MENU 26	PREF	00.00 to A5.15	0	rw	
58.02	NAME	OPERATOR MENU 26	STRING	max length is 16 chars		rw	
58.03	SCALING	OPERATOR MENU 26	ENUM	0 : NONE 1 : DISPLAY SCALE 1 2 : DISPLAY SCALE 2 3 : DISPLAY SCALE 3 4 : DISPLAY SCALE 4	NONE	rw	
58.04	READ ONLY	OPERATOR MENU 26	BOOL	0 : FALSE 1 : TRUE	FALSE	rw	
58.05	IGNORE PASSWORD	OPERATOR MENU 26	BOOL	0 : FALSE 1 : TRUE	FALSE	rw	

PREF	Name	Block	Type	Range	Default	ro\rw	Notes
59.01	PARAMETER	OPERATOR MENU 27	PREF	00.00 to A5.15	0	rw	
59.02	NAME	OPERATOR MENU 27	STRING	max length is 16 chars		rw	
59.03	SCALING	OPERATOR MENU 27	ENUM	0 : NONE 1 : DISPLAY SCALE 1 2 : DISPLAY SCALE 2 3 : DISPLAY SCALE 3 4 : DISPLAY SCALE 4	NONE	rw	
59.04	READ ONLY	OPERATOR MENU 27	BOOL	0 : FALSE 1 : TRUE	FALSE	rw	
59.05	IGNORE PASSWORD	OPERATOR MENU 27	BOOL	0 : FALSE 1 : TRUE	FALSE	rw	
60.01	PARAMETER	OPERATOR MENU 28	PREF	00.00 to A5.15	0	rw	
60.02	NAME	OPERATOR MENU 28	STRING	max length is 16 chars		rw	
60.03	SCALING	OPERATOR MENU 28	ENUM	0 : NONE 1 : DISPLAY SCALE 1 2 : DISPLAY SCALE 2 3 : DISPLAY SCALE 3 4 : DISPLAY SCALE 4	NONE	rw	
60.04	READ ONLY	OPERATOR MENU 28	BOOL	0 : FALSE 1 : TRUE	FALSE	rw	
60.05	IGNORE PASSWORD	OPERATOR MENU 28	BOOL	0 : FALSE 1 : TRUE	FALSE	rw	
61.01	PARAMETER	OPERATOR MENU 29	PREF	00.00 to A5.15	0	rw	
61.02	NAME	OPERATOR MENU 29	STRING	max length is 16 chars		rw	
61.03	SCALING	OPERATOR MENU 29	ENUM	0 : NONE 1 : DISPLAY SCALE 1 2 : DISPLAY SCALE 2 3 : DISPLAY SCALE 3 4 : DISPLAY SCALE 4	NONE	rw	
61.04	READ ONLY	OPERATOR MENU 29	BOOL	0 : FALSE 1 : TRUE	FALSE	rw	

PREF	Name	Block	Type	Range	Default	ro\rw	Notes
61.05	IGNORE PASSWORD	OPERATOR MENU 29	BOOL	0 : FALSE 1 : TRUE	FALSE	rw	
62.01	PARAMETER	OPERATOR MENU 30	PREF	00.00 to A5.15	0	rw	
62.02	NAME	OPERATOR MENU 30	STRING	max length is 16 chars		rw	
62.03	SCALING	OPERATOR MENU 30	ENUM	0 : NONE 1 : DISPLAY SCALE 1 2 : DISPLAY SCALE 2 3 : DISPLAY SCALE 3 4 : DISPLAY SCALE 4	NONE	rw	
62.04	READ ONLY	OPERATOR MENU 30	BOOL	0 : FALSE 1 : TRUE	FALSE	rw	
62.05	IGNORE PASSWORD	OPERATOR MENU 30	BOOL	0 : FALSE 1 : TRUE	FALSE	rw	
63.01	PARAMETER	OPERATOR MENU 31	PREF	00.00 to A5.15	0	rw	
63.02	NAME	OPERATOR MENU 31	STRING	max length is 16 chars		rw	
63.03	SCALING	OPERATOR MENU 31	ENUM	0 : NONE 1 : DISPLAY SCALE 1 2 : DISPLAY SCALE 2 3 : DISPLAY SCALE 3 4 : DISPLAY SCALE 4	NONE	rw	
63.04	READ ONLY	OPERATOR MENU 31	BOOL	0 : FALSE 1 : TRUE	FALSE	rw	
63.05	IGNORE PASSWORD	OPERATOR MENU 31	BOOL	0 : FALSE 1 : TRUE	FALSE	rw	
64.01	PARAMETER	OPERATOR MENU 32	PREF	00.00 to A5.15	0	rw	
64.02	NAME	OPERATOR MENU 32	STRING	max length is 16 chars		rw	
64.03	SCALING	OPERATOR MENU 32	ENUM	0 : NONE 1 : DISPLAY SCALE 1 2 : DISPLAY SCALE 2 3 : DISPLAY SCALE 3 4 : DISPLAY SCALE 4	NONE	rw	

PREF	Name	Block	Type	Range	Default	ro\rw	Notes
64.04	READ ONLY	OPERATOR MENU 32	BOOL	0 : FALSE 1 : TRUE	FALSE	rw	
64.05	IGNORE PASSWORD	OPERATOR MENU 32	BOOL	0 : FALSE 1 : TRUE	FALSE	rw	
65.01	DECIMAL PLACE	DISPLAY SCALE 1	ENUM	0 : DEFAULT 1 : X.XXXX 2 : X.XXX 3 : X.XX 4 : X.X 5 : X.	DEFAULT	rw	
65.02	FORMULA	DISPLAY SCALE 1	ENUM	0 : A/B * X + C 1 : A/B * (X+C) 2 : A/(B * X) + C 3 : A/(B * (X+C))	A/B * X + C	rw	
65.03	COEFFICIENT A	DISPLAY SCALE 1	REAL	-32768.0000 to 32767.0000	1.0000	rw	
65.04	COEFFICIENT B	DISPLAY SCALE 1	REAL	-32768.0000 to 32767.0000	1.0000	rw	
65.05	COEFFICIENT C	DISPLAY SCALE 1	REAL	-32768.0000 to 32767.0000	0.0000	rw	
65.06	HIGH LIMIT	DISPLAY SCALE 1	REAL	-32768.0000 to 32767.0000	0.0000	rw	
65.07	LOW LIMIT	DISPLAY SCALE 1	REAL	-32768.0000 to 32767.0000	0.0000	rw	
65.08	UNITS	DISPLAY SCALE 1	STRING	max length is 6 chars		rw	
66.01	DECIMAL PLACE	DISPLAY SCALE 2	ENUM	0 : DEFAULT 1 : X.XXXX 2 : X.XXX 3 : X.XX 4 : X.X 5 : X.	DEFAULT	rw	
66.02	FORMULA	DISPLAY SCALE 2	ENUM	0 : A/B * X + C 1 : A/B * (X+C) 2 : A/(B * X) + C 3 : A/(B * (X+C))	A/B * X + C	rw	
66.03	COEFFICIENT A	DISPLAY SCALE 2	REAL	-32768.0000 to 32767.0000	1.0000	rw	

PREF	Name	Block	Type	Range	Default	ro\rw	Notes
66.04	COEFFICIENT B	DISPLAY SCALE 2	REAL	-32768.0000 to 32767.0000	1.0000	rw	
66.05	COEFFICIENT C	DISPLAY SCALE 2	REAL	-32768.0000 to 32767.0000	0.0000	rw	
66.06	HIGH LIMIT	DISPLAY SCALE 2	REAL	-32768.0000 to 32767.0000	0.0000	rw	
66.07	LOW LIMIT	DISPLAY SCALE 2	REAL	-32768.0000 to 32767.0000	0.0000	rw	
66.08	UNITS	DISPLAY SCALE 2	STRING	max length is 6 chars		rw	
67.01	DECIMAL PLACE	DISPLAY SCALE 3	ENUM	0 : DEFAULT 1 : X.XXXX 2 : X.XXX 3 : X.XX 4 : X.X 5 : X.	DEFAULT	rw	
67.02	FORMULA	DISPLAY SCALE 3	ENUM	0 : A/B * X + C 1 : A/B * (X+C) 2 : A/(B * X) + C 3 : A/(B * (X+C))	A/B * X + C	rw	
67.03	COEFFICIENT A	DISPLAY SCALE 3	REAL	-32768.0000 to 32767.0000	1.0000	rw	
67.04	COEFFICIENT B	DISPLAY SCALE 3	REAL	-32768.0000 to 32767.0000	1.0000	rw	
67.05	COEFFICIENT C	DISPLAY SCALE 3	REAL	-32768.0000 to 32767.0000	0.0000	rw	
67.06	HIGH LIMIT	DISPLAY SCALE 3	REAL	-32768.0000 to 32767.0000	0.0000	rw	
67.07	LOW LIMIT	DISPLAY SCALE 3	REAL	-32768.0000 to 32767.0000	0.0000	rw	
67.08	UNITS	DISPLAY SCALE 3	STRING	max length is 6 chars		rw	
68.01	DECIMAL PLACE	DISPLAY SCALE 4	ENUM	0 : DEFAULT 1 : X.XXXX 2 : X.XXX 3 : X.XX 4 : X.X 5 : X.	DEFAULT	rw	

PREF	Name	Block	Type	Range	Default	ro\rw	Notes
68.02	FORMULA	DISPLAY SCALE 4	ENUM	0 : A/B * X + C 1 : A/B * (X+C) 2 : A/(B * X) + C 3 : A/(B * (X+C))	A/B * X + C	rw	
68.03	COEFFICIENT A	DISPLAY SCALE 4	REAL	-32768.0000 to 32767.0000	1.0000	rw	
68.04	COEFFICIENT B	DISPLAY SCALE 4	REAL	-32768.0000 to 32767.0000	1.0000	rw	
68.05	COEFFICIENT C	DISPLAY SCALE 4	REAL	-32768.0000 to 32767.0000	0.0000	rw	
68.06	HIGH LIMIT	DISPLAY SCALE 4	REAL	-32768.0000 to 32767.0000	0.0000	rw	
68.07	LOW LIMIT	DISPLAY SCALE 4	REAL	-32768.0000 to 32767.0000	0.0000	rw	
68.08	UNITS	DISPLAY SCALE 4	STRING	max length is 6 chars		rw	
69.01	VHZ ENABLE	FLYCATCHING	BOOL	0 : FALSE 1 : TRUE	FALSE	rw	
69.02	START MODE	FLYCATCHING	ENUM	0 : ALWAYS 1 : TRIP OR POWER UP 2 : TRIP	ALWAYS	rw	
69.03	SEARCH MODE	FLYCATCHING	ENUM	0 : BIDIRECTIONAL 1 : UNIDIRECTION	BIDIRECTION AL	rw	
69.04	SEARCH VOLTS	FLYCATCHING	REAL	0.00 to 100.00 %	8.00 %	rw	3,5
69.05	SEARCH BOOST	FLYCATCHING	REAL	0.00 to 50.00 %	15.00 %	rw	3,5
69.06	SEARCH TIME	FLYCATCHING	REAL	0.1 to 60.0 s	15.0 s	rw	3,5
69.07	MIN SEARCH SPEED	FLYCATCHING	REAL	0.0 to 500.0 Hz	5.0 Hz	rw	
69.08	REFLUX TIME	FLYCATCHING	REAL	0.1 to 20.0 s	5.0 s	rw	3,5
69.13	ACTIVE	FLYCATCHING	BOOL	0 : FALSE 1 : TRUE	FALSE	ro	Output
69.14	SETPOINT	FLYCATCHING	REAL	_.xx	0.00 %	ro	Output
69.15	VECTOR ENABLE	FLYCATCHING	BOOL	0 : FALSE 1 : TRUE	FALSE	rw	
70.01	QUADRATIC TORQUE	FEEDBACKS	BOOL	0 : FALSE 1 : TRUE	FALSE	rw	

PREF	Name	Block	Type	Range	Default	ro\rw	Notes
70.02	DC LINK VOLTS	FEEDBACKS	REAL	_.	0 V	ro	Output
70.03	TERMINAL VOLTS	FEEDBACKS	REAL	_.	0 V	ro	Output
70.04	SPEED FBK RPM	FEEDBACKS	REAL	_.xx	0.00 RPM	ro	Output
70.05	SPEED FBK REV/S	FEEDBACKS	REAL	_.xx	0.00 rev/s	ro	Output
70.06	SPEED FBK %	FEEDBACKS	REAL	_.xx	0.00 %	ro	Output
70.10	TORQUE FEEDBACK	FEEDBACKS	REAL	_.xx	0.00 %	ro	Output
70.11	FIELD FEEDBACK	FEEDBACKS	REAL	_.xx	0.00 %	ro	Output
70.12	MOTOR CURRENT %	FEEDBACKS	REAL	_.xx	0.00 %	ro	Output
70.13	MOTOR CURRENT A	FEEDBACKS	REAL	_.x	0.0 A	ro	Output
70.17	HEATSINK TEMP	FEEDBACKS	REAL	_.	28 C	ro	Output
70.18	HEATSINK TEMP	FEEDBACKS	REAL	_.	28 %	ro	Output
70.19	STACK RATING A	FEEDBACKS	REAL	_.x	59.0 A	ro	Output
70.20	OVERLOAD LEVEL	FEEDBACKS	ENUM	0 : LOW 1 : HIGH	HIGH	rw	
71.01	PULSE ENC VOLTS	ENCODER	REAL	10.0 to 20.0 V	10.0 V	rw	
71.02	ENCODER LINES	ENCODER	INT	32 to 262143	2048	rw	2
71.03	ENCODER INVERT	ENCODER	BOOL	0 : FALSE 1 : TRUE	FALSE	rw	
71.04	ENCODER TYPE	ENCODER	ENUM	0 : QUADRATURE 1 : CLOCK/DIR 2 : CLOCK 3 : QUADRATURE DIFF 4 : CLOCK/DIR DIFF 5 : CLOCK DIFF 6 : SINCOS INC 7 : ABS ENDAT ST 8 : ABS ENDAT MT	QUADRATUR E DIFF	rw	2
71.05	OUTPUT GBOX IN	ENCODER	INT	1 to 2000000000	1	rw	2, 5
71.06	ENCODER MECH O/S	ENCODER	REAL	0.0000 to 360.0000 deg	0.0000 deg	rw	2

PREF	Name	Block	Type	Range	Default	ro\rw	Notes
71.09	SHAFT POSITION	ENCODER	REAL	_.xx	0.00 deg	ro	Output
71.10	LOAD POSITION	ENCODER	REAL	_.xx	0.00 deg	ro	Output
71.13	CALIBRATN STATUS	ENCODER	ENUM	0 : NOT REQUIRED 1 : DRIVE NOT STOPD 2 : MOTOR NOT STOPD 3 : ENDAT FAULT 4 : CAL IN PROGRESS 5 : LD PSN IN PRGRSS 6 : COMPLETED 7 : CALIBRATION LOST 8 : CALIBRATN FAILED	NOT REQUIRED	ro	Output
71.15	REV COUNT	ENCODER	INT	_	0	ro	Output
71.22	SINCOS ENC VOLTS	ENCODER	ENUM	0 : 5V 1 : 10V	5V	rw	2
71.23	RESET LINE COUNT	ENCODER	BOOL	0 : FALSE 1 : TRUE	FALSE	rw	
71.24	CAL FAIL RETRY	ENCODER	BOOL	0 : FALSE 1 : TRUE	FALSE	rw	2
71.26	OUTPUT GBOX OUT	ENCODER	INT	-2000000000 to 2000000000	1	rw	2
71.30	ENCODER FEEDBACK	ENCODER	REAL	_.xx	0.00 RPM	ro	Output
71.31	LINE COUNT X4	ENCODER	INT	_	0	ro	Output
73.01	RANDOM PATTERN	PATTERN GEN	BOOL	0 : FALSE 1 : TRUE	TRUE	rw	
73.02	FREQ SELECT	PATTERN GEN	REAL	2000 to 6000 Hz	3000 Hz	rw	5
73.03	DEFLUX DELAY	PATTERN GEN	REAL	0.1 to 10.0 s	4.0 s	rw	3,5
73.04	DRIVE FREQUENCY	PATTERN GEN	REAL	_.xx	0.00 Hz	ro	Output
73.05	ACTUAL PWM FREQ	PATTERN GEN	REAL	_.	3000 Hz	ro	Output
73.11	PWM FREQ PMAC	PATTERN GEN	ENUM	0 : 4 KHz 1 : 8 KHz	4 KHz	rw	

PREF	Name	Block	Type	Range	Default	ro\rw	Notes
78.01	SPEED PROP GAIN	SPEED LOOP	REAL	0.0 to 3000.0	20.0	rw	
78.02	SPEED INT TIME	SPEED LOOP	REAL	1 to 15000 ms	100 ms	rw	
78.03	INT DEFEAT	SPEED LOOP	BOOL	0 : FALSE 1 : TRUE	FALSE	rw	
78.04	SPEED INT PRESET	SPEED LOOP	REAL	-500.00 to 500.00 %	0.00 %	rw	
78.05	SPEED DMD FILTER	SPEED LOOP	REAL	0.0 to 14.0 ms	0.0 ms	rw	
78.06	SPEED FBK FILTER	SPEED LOOP	REAL	0.0 to 15.0 ms	0.0 ms	rw	
78.07	AUX TORQUE DMD	SPEED LOOP	REAL	-300.00 to 300.00 %	0.00 %	rw	
78.08	ADAPTIVE THRESH	SPEED LOOP	REAL	0.00 to 10.00 %	0.00 %	rw	
78.09	ADAPTIVE P-GAIN	SPEED LOOP	REAL	0.00 to 300.00	20.00	rw	
78.10	DIRECT IP SELECT	SPEED LOOP	ENUM	0 : NONE 1 : ANIN 1 2 : ANIN 2 3 : ANIN 3 4 : ANIN 4 5 : ANIN 5 6 : ANIN 6	NONE	rw	
78.11	DIRECT RATIO	SPEED LOOP	REAL	-10.0000 to 10.0000	1.0000	rw	
78.12	DIRCT IP POS LIM	SPEED LOOP	REAL	-110.00 to 110.00 %	110.00 %	rw	
78.13	DIRCT IP NEG LIM	SPEED LOOP	REAL	-110.00 to 110.00 %	-110.00 %	rw	
78.14	SPEED POS LIM	SPEED LOOP	REAL	-110.00 to 110.00 %	110.00 %	rw	
78.15	SPEED NEG LIM	SPEED LOOP	REAL	-110.00 to 110.00 %	-110.00 %	rw	
78.16	TORQ DMD ISOLATE	SPEED LOOP	BOOL	0 : FALSE 1 : TRUE	FALSE	rw	
78.17	TOTL SPD DMD RPM	SPEED LOOP	REAL	_.xx	0.00 RPM	ro	Output
78.18	TOTAL SPD DMD %	SPEED LOOP	REAL	_.xx	0.00 %	ro	Output
78.19	SPEED ERROR	SPEED LOOP	REAL	_.xx	0.00 %	ro	Output
78.20	TORQUE DEMAND	SPEED LOOP	REAL	_.xx	0.00 %	ro	Output

PREF	Name	Block	Type	Range	Default	ro\rw	Notes
78.21	DIRECT INPUT	SPEED LOOP	REAL	_.xx	0.00 %	ro	Output
78.26	PHASE INPUT	SPEED LOOP	REAL	_.xx	0.00 %	ro	Output
78.27	COMPENSATION F1	SPEED LOOP	REAL	l 200 to l 8000 Hz	2000 Hz	rw	
78.28	DEMAND SOURCE	SPEED LOOP	ENUM	0 : LOCAL 1 : REMOTE 2 : COMMS 3 : CELITE+ 4 : FIREWIRE 5 : DIRECT FIREWIRE	REMOTE	ro	Output
78.29	SPD PI OUTPUT	SPEED LOOP	REAL	_.xx	0.00 %	ro	Output
78.30	COMPENSATN TYPE	SPEED LOOP	ENUM	0 : NONE 1 : MAX ATTENUATION 2 : MINIMUM PHASE 3 : PHASE ADVANCE 4 : NOTCH FILTER	NONE	rw	2
78.31	COMPENSATION F2	SPEED LOOP	REAL	l 200 to l 8000 Hz	2000 Hz	rw	
80.01	ENABLE	AUTOTUNE	BOOL	0 : FALSE 1 : TRUE	FALSE	rw	
80.02	MODE	AUTOTUNE	ENUM	0 : STATIONARY 1 : ROTATING 2 : SPD LOOP ROTATNG 3 : SPD LOOP STATNRY	ROTATING	rw	
80.03	TEST DISABLE	AUTOTUNE	WORD	0000 to FFFF	0000	rw	
80.09	ACTIVE	AUTOTUNE	BOOL	0 : FALSE 1 : TRUE	FALSE	ro	Output
80.20	SPD LOOP BNDWDTH	AUTOTUNE	REAL	0.0 to 500.0 Hz	2.0 Hz	rw	
80.23	SPD MAX TORQUE	AUTOTUNE	REAL	0.0 to 500.0 %	50.0 %	rw	
80.24	SPD MAX SPEED	AUTOTUNE	REAL	15.0 to 100.0 %	50.0 %	rw	

PREF	Name	Block	Type	Range	Default	ro\rw	Notes
81.01	VOLTAGE MODE	VOLTAGE CONTROL	ENUM	0 : NONE 1 : FIXED 2 : AUTOMATIC	NONE	rw	
81.02	MOTOR VOLTS	VOLTAGE CONTROL	REAL	0.0 to 575.0 V	400.0 V	rw	1,3,4
81.03	BASE VOLTS	VOLTAGE CONTROL	REAL	0.00 to 115.47 %	100.00 %	rw	
82.01	CURRENT LIMIT	CURRENT LIMIT	REAL	0.00 to 300.00 %	150.00 %	rw	
82.02	REGEN LIM ENABLE	CURRENT LIMIT	BOOL	0 : FALSE 1 : TRUE	TRUE	rw	
83.01	POS TORQUE LIM	TORQUE LIMIT	REAL	-300.00 to 300.00 %	150.00 %	rw	
83.02	NEG TORQUE LIM	TORQUE LIMIT	REAL	-300.00 to 300.00 %	-150.00 %	rw	
83.03	MAIN TORQUE LIM	TORQUE LIMIT	REAL	0.00 to 300.00 %	150.00 %	rw	
83.04	SYMMETRIC LIM	TORQUE LIMIT	BOOL	0 : FALSE 1 : TRUE	FALSE	rw	
83.05	ACTUAL POS LIM	TORQUE LIMIT	REAL	_.xx	0.00 %	ro	Output
83.06	ACTUAL NEG LIM	TORQUE LIMIT	REAL	_.xx	0.00 %	ro	Output
83.07	FAST STOP T-LIM	TORQUE LIMIT	REAL	0.00 to 300.00 %	150.00 %	rw	
84.01	AIMING POINT	INVERSE TIME	REAL	50.00 to 105.00 %	105.00 %	rw	
84.02	DELAY	INVERSE TIME	REAL	5.0 to 60.0 s	60.0 s	rw	
84.03	DOWN TIME	INVERSE TIME	REAL	1.0 to 10.0 s	10.0 s	rw	
84.04	UP TIME	INVERSE TIME	REAL	1.0 to 600.0 s	120.0 s	rw	
84.05	IT LIMITING	INVERSE TIME	BOOL	0 : FALSE 1 : TRUE	FALSE	ro	Output
84.06	INVERSE TIME OP	INVERSE TIME	REAL	_.xx	150.00 %	ro	Output
84.08	IT WARNING	INVERSE TIME	BOOL	0 : FALSE 1 : TRUE	FALSE	ro	Output
85.01	HYSTERISIS	ZERO SPEED	REAL	0.00 to 300.00 %	0.10 %	rw	
85.02	THRESHOLD	ZERO SPEED	REAL	0.00 to 300.00 %	0.50 %	rw	

PREF	Name	Block	Type	Range	Default	ro\rw	Notes
85.03	AT ZERO SPD FBK	ZERO SPEED	BOOL	0 : FALSE 1 : TRUE	TRUE	ro	Output
85.04	AT ZERO SPD DMD	ZERO SPEED	BOOL	0 : FALSE 1 : TRUE	TRUE	ro	Output
85.05	AT STANDSTILL	ZERO SPEED	BOOL	0 : FALSE 1 : TRUE	TRUE	ro	Output
91.01	INPUT	SKIP FREQUENCIES	REAL	-300.00 to 300.00 %	0.00 %	rw	
91.02	BAND 1	SKIP FREQUENCIES	REAL	0.0 to 500.0 Hz	0.0 Hz	rw	
91.03	FREQUENCY 1	SKIP FREQUENCIES	REAL	0.0 to 500.0 Hz	0.0 Hz	rw	
91.04	BAND 2	SKIP FREQUENCIES	REAL	0.0 to 500.0 Hz	0.0 Hz	rw	
91.05	FREQUENCY 2	SKIP FREQUENCIES	REAL	0.0 to 500.0 Hz	0.0 Hz	rw	
91.06	BAND 3	SKIP FREQUENCIES	REAL	0.0 to 500.0 Hz	0.0 Hz	rw	
91.07	FREQUENCY 3	SKIP FREQUENCIES	REAL	0.0 to 500.0 Hz	0.0 Hz	rw	
91.08	BAND 4	SKIP FREQUENCIES	REAL	0.0 to 500.0 Hz	0.0 Hz	rw	
91.09	FREQUENCY 4	SKIP FREQUENCIES	REAL	0.0 to 500.0 Hz	0.0 Hz	rw	
91.10	OUTPUT	SKIP FREQUENCIES	REAL	_.xx	0.00 %	ro	Output
91.11	OUTPUT Hz	SKIP FREQUENCIES	REAL	_.x	0.0 Hz	ro	Output
91.12	INPUT Hz	SKIP FREQUENCIES	REAL	_.x	0.0 Hz	ro	Output
92.01	RUN FORWARD	SEQUENCING LOGIC	BOOL	0 : FALSE 1 : TRUE	FALSE	rw	
92.02	RUN REVERSE	SEQUENCING LOGIC	BOOL	0 : FALSE 1 : TRUE	FALSE	rw	
92.03	LATCHED RUN	SEQUENCING LOGIC	BOOL	0 : FALSE 1 : TRUE	FALSE	rw	
92.04	JOG	SEQUENCING LOGIC	BOOL	0 : FALSE 1 : TRUE	FALSE	rw	
92.05	CONTACTOR CLOSED	SEQUENCING LOGIC	BOOL	0 : FALSE 1 : TRUE	TRUE	rw	

PREF	Name	Block	Type	Range	Default	ro\rw	Notes
92.06	DRIVE ENABLE	SEQUENCING LOGIC	BOOL	0 : FALSE 1 : TRUE	TRUE	rw	
92.07	NOT FAST STOP	SEQUENCING LOGIC	BOOL	0 : FALSE 1 : TRUE	TRUE	rw	
92.08	NOT COAST STOP	SEQUENCING LOGIC	BOOL	0 : FALSE 1 : TRUE	TRUE	rw	
92.09	REMOTE REVERSE	SEQUENCING LOGIC	BOOL	0 : FALSE 1 : TRUE	FALSE	rw	
92.10	REM TRIP RESET	SEQUENCING LOGIC	BOOL	0 : FALSE 1 : TRUE	FALSE	rw	
92.11	TRIP RST BY RUN	SEQUENCING LOGIC	BOOL	0 : FALSE 1 : TRUE	TRUE	rw	
92.12	POWER UP START	SEQUENCING LOGIC	BOOL	0 : FALSE 1 : TRUE	FALSE	rw	
92.13	TRIPPED	SEQUENCING LOGIC	BOOL	0 : FALSE 1 : TRUE	FALSE	ro	Output
92.14	RUNNING	SEQUENCING LOGIC	BOOL	0 : FALSE 1 : TRUE	FALSE	ro	Output
92.15	JOGGING	SEQUENCING LOGIC	BOOL	0 : FALSE 1 : TRUE	FALSE	ro	Output
92.16	STOPPING	SEQUENCING LOGIC	BOOL	0 : FALSE 1 : TRUE	FALSE	ro	Output
92.17	OUTPUT CONTACTOR	SEQUENCING LOGIC	BOOL	0 : FALSE 1 : TRUE	FALSE	ro	Output
92.18	SWITCH ON ENABLE	SEQUENCING LOGIC	BOOL	0 : FALSE 1 : TRUE	FALSE	ro	Output
92.19	SWITCHED ON	SEQUENCING LOGIC	BOOL	0 : FALSE 1 : TRUE	FALSE	ro	Output
92.20	READY	SEQUENCING LOGIC	BOOL	0 : FALSE 1 : TRUE	FALSE	ro	Output

PREF	Name	Block	Type	Range	Default	ro\rw	Notes
92.21	SYSTEM RESET	SEQUENCING LOGIC	BOOL	0 : FALSE 1 : TRUE	FALSE	ro	Output
92.22	SEQUENCER STATE	SEQUENCING LOGIC	ENUM	0 : START DISABLED 1 : START ENABLED 2 : SWITCHED ON 3 : READY 4 : ENABLED 5 : F-STOP ACTIVE 6 : TRIP ACTIVE 7 : TRIPPED	START DISABLED	ro	Output
92.23	REMOTE REV OUT	SEQUENCING LOGIC	BOOL	0 : FALSE 1 : TRUE	FALSE	ro	Output
92.24	HEALTHY	SEQUENCING LOGIC	BOOL	0 : FALSE 1 : TRUE	TRUE	ro	Output
92.25	START DELAY	SEQUENCING LOGIC	REAL	0.000 to 30.000 s	0.000 s	rw	
92.26	FAN RUNNING	SEQUENCING LOGIC	BOOL	0 : FALSE 1 : TRUE	FALSE	ro	Output
92.27	CONTACTOR DELAY	SEQUENCING LOGIC	REAL	1.0 to 10.0 s	10.0 s	rw	
93.01	ENABLE	AUTO RESTART	BOOL	0 : FALSE 1 : TRUE	FALSE	rw	
93.02	ATTEMPTS	AUTO RESTART	INT	1 to 10	5	rw	
93.03	INITIAL DELAY 1	AUTO RESTART	REAL	0.0 to 600.0 s	10.0 s	rw	
93.04	ATTEMPT DELAY 1	AUTO RESTART	REAL	0.0 to 600.0 s	10.0 s	rw	
93.05	TRIGGER 1 WORD 1	AUTO RESTART	WORD	0000 to FFFF	0000	rw	
93.06	TRIGGER 1 WORD 2	AUTO RESTART	WORD	0000 to FFFF	0000	rw	
93.07	INITIAL DELAY 2	AUTO RESTART	REAL	0.0 to 600.0 s	0.1 s	rw	
93.08	ATTEMPT DELAY 2	AUTO RESTART	REAL	0.0 to 600.0 s	0.1 s	rw	
93.09	TRIGGER 2 WORD 1	AUTO RESTART	WORD	0000 to FFFF	0000	rw	
93.10	TRIGGER 2 WORD 2	AUTO RESTART	WORD	0000 to FFFF	0000	rw	

PREF	Name	Block	Type	Range	Default	ro\rw	Notes
93.11	PENDING	AUTO RESTART	BOOL	0 : FALSE 1 : TRUE	FALSE	ro	Output
93.12	RESTARTING	AUTO RESTART	BOOL	0 : FALSE 1 : TRUE	FALSE	ro	Output
93.13	ATTEMPTS LEFT	AUTO RESTART	INT	_	5	ro	Output
93.14	TIME LEFT	AUTO RESTART	REAL	_.x	0.0 s	ro	Output
93.15	TRIGGER 1 WORD 3	AUTO RESTART	WORD	0000 to FFFF	0000	rw	
93.16	TRIGGER 1 WORD 4	AUTO RESTART	WORD	0000 to FFFF	0000	rw	
93.17	TRIGGER 2 WORD 3	AUTO RESTART	WORD	0000 to FFFF	0000	rw	
93.18	TRIGGER 2 WORD 4	AUTO RESTART	WORD	0000 to FFFF	0000	rw	
93.19	TRIGGER 1 WORD 5	AUTO RESTART	WORD	0000 to FFFF	0000	rw	
93.20	TRIGGER 1 WORD 6	AUTO RESTART	WORD	0000 to FFFF	0000	rw	
93.21	TRIGGER 2 WORD 5	AUTO RESTART	WORD	0000 to FFFF	0000	rw	
93.22	TRIGGER 2 WORD 6	AUTO RESTART	WORD	0000 to FFFF	0000	rw	
94.01	SEQ MODES	LOCAL CONTROL	ENUM	0 : LOCAL/REMOTE 1 : LOCAL ONLY 2 : REMOTE ONLY	LOCAL/ REMOTE	rw	
94.02	REF MODES	LOCAL CONTROL	ENUM	0 : LOCAL/REMOTE 1 : LOCAL ONLY 2 : REMOTE ONLY	LOCAL/ REMOTE	rw	
94.03	POWER UP MODE	LOCAL CONTROL	ENUM	0 : LOCAL 1 : REMOTE 2 : AUTOMATIC	REMOTE	rw	
94.04	SEQ DIRECTION	LOCAL CONTROL	BOOL	0 : FALSE 1 : TRUE	FALSE	rw	
94.05	REMOTE SEQ	LOCAL CONTROL	BOOL	0 : FALSE 1 : TRUE	TRUE	ro	Output
94.06	REMOTE REF	LOCAL CONTROL	BOOL	0 : FALSE 1 : TRUE	TRUE	ro	Output

PREF	Name	Block	Type	Range	Default	ro\rw	Notes
95.01	REMOTE COMMS SEL	COMMS CONTROL	BOOL	0 : FALSE 1 : TRUE	FALSE	rw	
95.02	REMOTE SEQ MODES	COMMS CONTROL	ENUM	0 : TERMINALS/COMMS 1 : TERMINALS ONLY 2 : COMMS ONLY	TERMINALS/COMMS	rw	
95.03	REMOTE REF MODES	COMMS CONTROL	ENUM	0 : TERMINALS/COMMS 1 : TERMINALS ONLY 2 : COMMS ONLY	TERMINALS/COMMS	rw	
95.04	COMMS TIMEOUT	COMMS CONTROL	REAL	0.0 to 600.0 s	0.0 s	rw	
95.05	COMMS COMMAND	COMMS CONTROL	WORD	0000 to FFFF	0000	rw	1
95.06	COMMS SEQ	COMMS CONTROL	BOOL	0 : FALSE 1 : TRUE	FALSE	ro	Output
95.07	COMMS REF	COMMS CONTROL	BOOL	0 : FALSE 1 : TRUE	FALSE	ro	Output
95.08	COMMS STATUS	COMMS CONTROL	WORD	0000 to FFFF	0470	ro	Output
95.10	FIREWIRE REF SEL	COMMS CONTROL	BOOL	0 : FALSE 1 : TRUE	FALSE	rw	
95.11	FIREWIRE REF	COMMS CONTROL	BOOL	0 : FALSE 1 : TRUE	FALSE	ro	Output

PREF	Name	Block	Type	Range	Default	ro\rw	Notes
96.01	TRIP 1 (NEWEST)	TRIPS HISTORY	ENUM	0 : NO TRIP 1 : OVERVOLTAGE 2 : UNDERVOLTAGE 3 : OVERCURRENT 4 : HEATSINK 5 : EXTERNAL TRIP 6 : INPUT 1 BREAK 7 : INPUT 2 BREAK 8 : MOTOR STALLED 9 : INVERSE TIME 10 : BRAKE RESISTOR 11 : BRAKE SWITCH 12 : OP STATION 13 : COMMS BREAK 14 : CONTACTOR FBK 15 : SPEED FEEDBACK 16 : AMBIENT TEMP 17 : MOTOR OVERTEMP 18 : CURRENT LIMIT 20 : 24V FAILURE 21 : LOW SPEED OVER I 22 : PHASE FAIL 23 : FBK ENCODER FAIL 24 : DESAT (OVER I) 25 : VDC RIPPLE 26 : BRAKE SHORT CCT 27 : OVERSPEED 28 : ANALOG INPUT ERR 29 : INT DB RESISTOR List continues - see 96.02	NO TRIP	ro	Output

PREF	Name	Block	Type	Range	Default	ro\rw	Notes
96.02	TRIP 2	TRIPS HISTORY	ENUM	31 : UNKNOWN 32 : OTHER 33 : MAX SPEED LOW 34 : MAINS VOLTS LOW 35 : NOT AT SPEED 36 : MAG CURRENT FAIL 37 : NEGATIVE SLIP F 38 : TR TOO LARGE 39 : TR TOO SMALL 40 : MAX RPM DATA ERR 41 : STACK TRIP 42 : LEAKGE L TIMEOUT 43 : POWER LOSS STOP 44 : MOTR TURNING ERR 45 : MOTR STALLED ERR 46 : AT TORQ LIM ERR 48 : FBK ENCODER CAL 49 : OUTPUT GBX ERROR 50 : APP HALTED 51 : APP ERROR 52 : FIRMWARE ERROR 57 : RESOLVER ERROR 58 : I2T MOTOR TRIP 60 : SAFE TORQUE OFF 61 : REF ENCODER CAL 62 : REF ENCODER FAIL 63 : DRIVE CONFIG ERR 65 : CUST TRIP 1 66 : CUST TRIP 2 67 : CUST TRIP 3 68 : CUST TRIP 4 69 : CUST TRIP 5 70 : CUST TRIP 6 71 : CUST TRIP 7	NO TRIP	ro	Output
96.03	TRIP 3	TRIPS HISTORY	ENUM	Refer to 96.01, 96.02	NO TRIP	ro	Output
96.04	TRIP 4	TRIPS HISTORY	ENUM	Refer to 96.01, 96.02	NO TRIP	ro	Output

PREF	Name	Block	Type	Range	Default	ro\rw	Notes
96.05	TRIP 5	TRIPS HISTORY	ENUM	Refer to 96.01, 96.02	NO TRIP	ro	Output
96.06	TRIP 6	TRIPS HISTORY	ENUM	Refer to 96.01, 96.02	NO TRIP	ro	Output
96.07	TRIP 7	TRIPS HISTORY	ENUM	Refer to 96.01, 96.02	NO TRIP	ro	Output
96.08	TRIP 8	TRIPS HISTORY	ENUM	Refer to 96.01, 96.02	NO TRIP	ro	Output
96.09	TRIP 9	TRIPS HISTORY	ENUM	Refer to 96.01, 96.02	NO TRIP	ro	Output
96.10	TRIP 10 (OLDEST)	TRIPS HISTORY	ENUM	Refer to 96.01, 96.02	NO TRIP	ro	Output
97.01	DISABLED WORD 1	TRIPS STATUS	WORD	0000 to FFFF	0300	rw	5
97.02	DISABLED WORD 2	TRIPS STATUS	WORD	0000 to FFFF	0800	rw	
97.05	ACTIVE WORD 1	TRIPS STATUS	WORD	0000 to FFFF	0000	ro	Output
97.06	ACTIVE WORD 2	TRIPS STATUS	WORD	0000 to FFFF	0000	ro	Output
97.07	WARNINGS WORD 1	TRIPS STATUS	WORD	0000 to FFFF	0000	ro	Output
97.08	WARNINGS WORD 2	TRIPS STATUS	WORD	0000 to FFFF	0000	ro	Output
97.09	FIRST TRIP	TRIPS STATUS	ENUM	Refer to 96.01, 96.02	NO TRIP	ro	Output
97.10	DISABLED WORD 3	TRIPS STATUS	WORD	0000 to FFFF	0000	rw	
97.11	DISABLED WORD 4	TRIPS STATUS	WORD	0000 to FFFF	0000	rw	
97.14	ACTIVE WORD 3	TRIPS STATUS	WORD	0000 to FFFF	0000	ro	Output
97.15	ACTIVE WORD 4	TRIPS STATUS	WORD	0000 to FFFF	0000	ro	Output
97.16	WARNINGS WORD 3	TRIPS STATUS	WORD	0000 to FFFF	0000	ro	Output
97.17	WARNINGS WORD 4	TRIPS STATUS	WORD	0000 to FFFF	0000	ro	Output
97.18	DISABLED WORD 5	TRIPS STATUS	WORD	0000 to FFFF	0000	rw	
97.19	DISABLED WORD 6	TRIPS STATUS	WORD	0000 to FFFF	0000	rw	
97.22	ACTIVE WORD 5	TRIPS STATUS	WORD	0000 to FFFF	0000	ro	Output
97.23	ACTIVE WORD 6	TRIPS STATUS	WORD	0000 to FFFF	0000	ro	Output
97.24	WARNINGS WORD 5	TRIPS STATUS	WORD	0000 to FFFF	0000	ro	Output
97.25	WARNINGS WORD 6	TRIPS STATUS	WORD	0000 to FFFF	0000	ro	Output

PREF	Name	Block	Type	Range	Default	ro\rw	Notes
97.26	U PHASE FAULT	TRIPS STATUS	BOOL	0 : FALSE 1 : TRUE	FALSE	ro	Output
97.27	V PHASE FAULT	TRIPS STATUS	BOOL	0 : FALSE 1 : TRUE	FALSE	ro	Output
97.28	W PHASE FAULT	TRIPS STATUS	BOOL	0 : FALSE 1 : TRUE	FALSE	ro	Output
98.01	INVERT THERMIST	I/O TRIPS	BOOL	0 : FALSE 1 : TRUE	FALSE	rw	
98.02	INVERT ENC TRIP	I/O TRIPS	BOOL	0 : FALSE 1 : TRUE	FALSE	rw	
98.03	INPUT 1 BREAK	I/O TRIPS	BOOL	0 : FALSE 1 : TRUE	FALSE	rw	
98.04	INPUT 2 BREAK	I/O TRIPS	BOOL	0 : FALSE 1 : TRUE	FALSE	rw	
98.05	THERMISTOR	I/O TRIPS	BOOL	0 : FALSE 1 : TRUE	FALSE	ro	Output
98.06	ENCODER	I/O TRIPS	BOOL	0 : FALSE 1 : TRUE	FALSE	ro	Output
98.07	EXTERNAL TRIP	I/O TRIPS	BOOL	0 : FALSE 1 : TRUE	FALSE	ro	Output
98.08	EXT TRIP MODE	I/O TRIPS	ENUM	0 : TRIP 1 : COAST 2 : DISABLED	DISABLED	rw	
98.09	COMMS BREAK	I/O TRIPS	BOOL	0 : FALSE 1 : TRUE	FALSE	rw	
98.10	INPUT 1 NAME	I/O TRIPS	STRING	max length is 16 chars		rw	
98.11	INPUT 2 NAME	I/O TRIPS	STRING	max length is 16 chars		rw	
99.01	ENABLE	DYNAMIC BRAKING	BOOL	0 : FALSE 1 : TRUE	TRUE	rw	
99.03	BRAKE RESISTANCE	DYNAMIC BRAKING	REAL	0.01 to 300.00 Ohm	100.00 Ohm	rw	2, 5

PREF	Name	Block	Type	Range	Default	ro\rw	Notes
99.04	BRAKE POWER	DYNAMIC BRAKING	REAL	0.1 to 510.0 kW	0.1 kW	rw	2, 5
99.05	1SEC OVER RATING	DYNAMIC BRAKING	REAL	1 to 40	25	rw	2, 5
99.06	BRAKING	DYNAMIC BRAKING	BOOL	0 : FALSE 1 : TRUE	FALSE	ro	Output
99.07	INT DB RESISTOR	DYNAMIC BRAKING	BOOL	0 : FALSE 1 : TRUE	FALSE	rw	3
100.01	RAMP TYPE	REFERENCE RAMP	ENUM	0 : LINEAR 1 : S	LINEAR	rw	
100.02	ACCEL TIME	REFERENCE RAMP	REAL	0.0 to 3000.0 s	20.0 s	rw	3
100.03	DECEL TIME	REFERENCE RAMP	REAL	0.0 to 3000.0 s	20.0 s	rw	3
100.04	SYMMETRIC MODE	REFERENCE RAMP	BOOL	0 : FALSE 1 : TRUE	FALSE	rw	
100.05	SYMMETRIC TIME	REFERENCE RAMP	REAL	0.0 to 3000.0 s	20.0 s	rw	3
100.06	SRAMP CONTINUOUS	REFERENCE RAMP	BOOL	0 : FALSE 1 : TRUE	TRUE	rw	
100.07	SRAMP ACCEL	REFERENCE RAMP	REAL	0.00 to 100.00 /s^2	10.00 /s^2	rw	
100.08	SRAMP DECEL	REFERENCE RAMP	REAL	0.00 to 100.00 /s^2	10.00 /s^2	rw	
100.09	SRAMP JERK 1	REFERENCE RAMP	REAL	0.00 to 100.00 /s^3	10.00 /s^3	rw	
100.10	SRAMP JERK 2	REFERENCE RAMP	REAL	0.00 to 100.00 /s^3	10.00 /s^3	rw	
100.11	SRAMP JERK 3	REFERENCE RAMP	REAL	0.00 to 100.00 /s^3	10.00 /s^3	rw	
100.12	SRAMP JERK 4	REFERENCE RAMP	REAL	0.00 to 100.00 /s^3	10.00 /s^3	rw	
100.13	HOLD	REFERENCE RAMP	BOOL	0 : FALSE 1 : TRUE	FALSE	rw	
100.14	RAMPING	REFERENCE RAMP	BOOL	0 : FALSE 1 : TRUE	FALSE	ro	Output
101.01	REMOTE SETPOINT	REFERENCE	REAL	-300.00 to 300.00 %	0.00 %	rw	
101.02	SPEED TRIM	REFERENCE	REAL	-300.00 to 300.00 %	0.00 %	rw	
101.03	MAX SPEED CLAMP	REFERENCE	REAL	0.00 to 110.00 %	110.00 %	rw	

PREF	Name	Block	Type	Range	Default	ro\rw	Notes
101.04	MIN SPEED CLAMP	REFERENCE	REAL	-110.00 to 0.00 %	-110.00 %	rw	
101.05	TRIM IN LOCAL	REFERENCE	BOOL	0 : FALSE 1 : TRUE	FALSE	rw	
101.06	REMOTE REVERSE	REFERENCE	BOOL	0 : FALSE 1 : TRUE	FALSE	rw	
101.07	COMMS SETPOINT	REFERENCE	REAL	-300.00 to 300.00 %	0.00 %	rw	1
101.08	MAX SPEED	REFERENCE	REAL	0 to 32000 RPM	1500 RPM	rw	4
101.09	SPEED DEMAND	REFERENCE	REAL	_.xx	0.00 %	ro	Output
101.10	SPEED SETPOINT	REFERENCE	REAL	_.xx	0.00 %	ro	Output
101.11	REVERSE	REFERENCE	BOOL	0 : FALSE 1 : TRUE	FALSE	ro	Output
101.12	LOCAL SETPOINT	REFERENCE	REAL	_.xx	0.00 %	ro	Output
101.13	LOCAL REVERSE	REFERENCE	BOOL	0 : FALSE 1 : TRUE	FALSE	ro	Output
101.15	FWIRE SETPOINT	REFERENCE	REAL	_.xx	0.00 %	ro	Output
101.16	SPEED DEMAND	REFERENCE	REAL	_.x	0.0 Hz	ro	Output
102.01	RUN STOP MODE	REFERENCE STOP	ENUM	0 : RUN RAMP 1 : COAST 2 : DC INJECTION 3 : STOP RAMP	RUN RAMP	rw	
102.02	STOP TIME	REFERENCE STOP	REAL	0.0 to 600.0 s	10.0 s	rw	
102.03	STOP ZERO SPEED	REFERENCE STOP	REAL	0.00 to 100.00 %	0.10 %	rw	
102.04	STOP DELAY	REFERENCE STOP	REAL	0.000 to 30.000 s	0.500 s	rw	
102.05	FAST STOP MODE	REFERENCE STOP	ENUM	0 : RAMP 1 : COAST	RAMP	rw	
102.06	FAST STOP LIMIT	REFERENCE STOP	REAL	0.0 to 3000.0 s	30.0 s	rw	
102.07	FAST STOP TIME	REFERENCE STOP	REAL	0.0 to 600.0 s	0.1 s	rw	
102.08	FINAL STOP RATE	REFERENCE STOP	REAL	1 to 4800 Hz/s	1200 Hz/s	rw	

PREF	Name	Block	Type	Range	Default	ro\rw	Notes
103.01	SETPOINT	REFERENCE JOG	REAL	-100.00 to 100.00 %	10.00 %	rw	
103.02	ACCEL TIME	REFERENCE JOG	REAL	0.0 to 3000.0 s	1.0 s	rw	
103.03	DECEL TIME	REFERENCE JOG	REAL	0.0 to 3000.0 s	1.0 s	rw	
105.01	STALL TIME	STALL TRIP	REAL	0.1 to 3000.0 s	480.0 s	rw	3
105.02	STALL LIMIT	STALL TRIP	REAL	50.00 to 150.00 %	100.00 %	rw	
105.03	STALL LIMIT TYPE	STALL TRIP	ENUM	0 : TORQUE 1 : CURRENT 2 : TRQ OR CURRENT	TRQ OR CURRENT	rw	
108.01	ADVANCE	PHASE INCH	BOOL	0 : FALSE 1 : TRUE	FALSE	rw	
108.02	RETARD	PHASE INCH	BOOL	0 : FALSE 1 : TRUE	FALSE	rw	
108.03	RATE	PHASE INCH	REAL	0.0001 to 30.0000	0.1000	rw	
108.04	ACTIVE	PHASE INCH	BOOL	0 : FALSE 1 : TRUE	FALSE	ro	Output
108.08	RATE SCALE	PHASE INCH	REAL	0.001 to 30.000	1.000	rw	
108.09	RESET	PHASE INCH	BOOL	0 : FALSE 1 : TRUE	FALSE	rw	
108.10	OFFSET	PHASE INCH	REAL	_.xxxx	0.0000	ro	Output
109.01	ENABLE	PHASE MOVE	BOOL	0 : FALSE 1 : TRUE	FALSE	rw	
109.02	DISTANCE	PHASE MOVE	REAL	-3000.0 to 3000.0	1.0	rw	
109.03	DISTANCE FINE	PHASE MOVE	REAL	-1.0000 to 1.0000	0.0000	rw	
109.04	VELOCITY	PHASE MOVE	REAL	0.10 to 300.00 %	1.00 %	rw	
109.05	ACTIVE	PHASE MOVE	BOOL	0 : FALSE 1 : TRUE	FALSE	ro	Output
109.06	DISTANCE LEFT	PHASE MOVE	REAL	_.xx	0.00	ro	Output
109.07	ACCELERATION	PHASE MOVE	REAL	0.01 to 3000.00 %	1.00 %	rw	

PREF	Name	Block	Type	Range	Default	ro\rw	Notes
109.08	HOLD	PHASE MOVE	BOOL	0 : FALSE 1 : TRUE	FALSE	rw	
109.10	OFFSET	PHASE MOVE	REAL	_.xxxx	0.0000	ro	Output
109.11	RESET	PHASE MOVE	BOOL	0 : FALSE 1 : TRUE	FALSE	rw	
110.01	OFFSET	PHASE OFFSET	REAL	-3000.0 to 3000.0	0.0	rw	
110.02	OFFSET FINE	PHASE OFFSET	REAL	-1.0000 to 1.0000	0.0000	rw	
110.03	ACTIVE	PHASE OFFSET	BOOL	0 : FALSE 1 : TRUE	FALSE	ro	Output
110.04	SPEED OFFSET	PHASE OFFSET	REAL	-300.00 to 300.00 %	0.00 %	rw	
111.01	PERIOD	PHASE TUNING	REAL	0.001 to 30.000 s	10.000 s	rw	
111.02	ENABLE SPEED	PHASE TUNING	BOOL	0 : FALSE 1 : TRUE	FALSE	rw	
111.03	SPEED OFFSET	PHASE TUNING	REAL	-300.00 to 300.00 %	1.00 %	rw	
111.04	ENABLE PHASE	PHASE TUNING	BOOL	0 : FALSE 1 : TRUE	FALSE	rw	
111.05	PHASE OFFSET	PHASE TUNING	REAL	-300.00 to 300.00	1.00	rw	
111.06	ACTIVE	PHASE TUNING	BOOL	0 : FALSE 1 : TRUE	FALSE	ro	Output
111.07	SINE WAVE	PHASE TUNING	BOOL	0 : FALSE 1 : TRUE	FALSE	rw	
111.08	REFERENCE TYPE	PHASE TUNING	ENUM	0 : SQUARE 1 : SINUSOIDAL 2 : TRIANGULAR	SQUARE	rw	
111.09	SPEED AMPLITUDE	PHASE TUNING	REAL	0.0000 to 100.0000 rev/s	0.1000 rev/s	rw	
111.12	RUN TR FUNC TEST	PHASE TUNING	BOOL	0 : FALSE 1 : TRUE	FALSE	rw	
111.13	NO OF MEASRMENTS	PHASE TUNING	INT	1 to 10000	100	rw	
111.14	TORQUE AMPLITUDE	PHASE TUNING	REAL	0.00 to 100.00 %	20.00 %	rw	

PREF	Name	Block	Type	Range	Default	ro\rw	Notes
111.15	TRANSF FUNC TYPE	PHASE TUNING	ENUM	0 : SPEED TRANSFR FN 1 : OPEN LP TRANS FN 2 : CURRENT LP TR FN	OPEN LP TRANS FN	rw	
111.16	POSN AMPLITUDE	PHASE TUNING	REAL	0.0000 to 100.0000 deg	1.0000 deg	rw	
111.17	MEASURMENTS DONE	PHASE TUNING	INT	_	0	ro	Output
112.01	ENABLE	POWER LOSS CNTRL	BOOL	0 : FALSE 1 : TRUE	FALSE	rw	
112.02	TRIP THRESHOLD	POWER LOSS CNTRL	REAL	0 to 1000 V	447 V	rw	3,5
112.03	CONTROL BAND	POWER LOSS CNTRL	REAL	0 to 1000 V	20 V	rw	
112.04	ACCEL TIME	POWER LOSS CNTRL	REAL	0.01 to 300.00 s	10.00 s	rw	
112.05	DECEL TIME	POWER LOSS CNTRL	REAL	0.01 to 300.00 s	5.00 s	rw	
112.06	TIME LIMIT	POWER LOSS CNTRL	REAL	0.00 to 300.00 s	30.00 s	rw	
112.07	PWR LOSS ACTIVE	POWER LOSS CNTRL	BOOL	0 : FALSE 1 : TRUE	FALSE	ro	Output
112.08	INITIAL STEP	POWER LOSS CNTRL	REAL	0.00 to 100.00 %	0.00 %	rw	
113.01	RESET	ENERGY METER	BOOL	0 : FALSE 1 : TRUE	FALSE	rw	
113.02	POWER	ENERGY METER	REAL	_.xx	0.00 kW	ro	Output
113.03	POWER	ENERGY METER	REAL	_.xx	0.00 hp	ro	Output
113.04	REACTIVE POWER	ENERGY METER	REAL	_.xx	0.00 kVAR	ro	Output
113.05	ENERGY USED	ENERGY METER	REAL	_.x	0.0 kW hr	ro	Output
113.07	POWER FACTOR	ENERGY METER	REAL	_.x	0.0	ro	Output
113.08	PF ANGLE	ENERGY METER	REAL	_.xx	0.00 deg	ro	Output
113.09	RAW POWER	ENERGY METER	REAL	_.xx	0.00 kW	ro	Output
113.10	RAW R. POWER	ENERGY METER	REAL	_.xx	0.00 kVAR	ro	Output
114.01	PRECHARGE CLOSED	REGEN CNTRL	BOOL	0 : FALSE 1 : TRUE	TRUE	rw	

PREF	Name	Block	Type	Range	Default	ro\rw	Notes
114.02	DC VOLTS DEMAND	REGEN CNTRL	REAL	0 to 1000 V	720 V	rw	
114.07	Id DEMAND	REGEN CNTRL	REAL	-1.5 to 1.5	0.1	rw	
114.08	CURRENT CONTROL	REGEN CNTRL	BOOL	0 : FALSE 1 : TRUE	FALSE	rw	
114.09	SYNCHRONIZING	REGEN CNTRL	BOOL	0 : FALSE 1 : TRUE	FALSE	ro	Output
114.10	SYNCHRONIZED	REGEN CNTRL	BOOL	0 : FALSE 1 : TRUE	FALSE	ro	Output
114.11	PHASE LOSS	REGEN CNTRL	BOOL	0 : FALSE 1 : TRUE	FALSE	ro	Output
114.12	CLOSE PRECHARGE	REGEN CNTRL	BOOL	0 : FALSE 1 : TRUE	FALSE	ro	Output
114.13	ENABLE DRIVE	REGEN CNTRL	BOOL	0 : FALSE 1 : TRUE	FALSE	ro	Output
114.14	STATUS	REGEN CNTRL	ENUM	0 : INACTIVE 1 : SYNCHRONIZING 2 : SYNCHRONIZED 3 : SUPPLY FRQ HIGH 4 : SUPPLY FRQ LOW 5 : SYNCH FAILED	INACTIVE	ro	Output
114.15	BRAKE MODE	REGEN CNTRL	BOOL	0 : FALSE 1 : TRUE	FALSE	rw	
114.18	Iq DEMAND	REGEN CNTRL	REAL	-1.5 to 1.5	0.0	rw	
114.19	MAX CURRENT	REGEN CNTRL	REAL	0 to 1.5	1.5	Rw	
114.25	HARDWARE SYNC	REGEN CNTRL	BOOL	0 : FALSE 1 : TRUE	FALSE	Rw	
115.01	INHIBIT	SPD FBK TRIP	BOOL	0 : FALSE 1 : TRUE	FALSE	rw	
115.02	THRESHOLD	SPD FBK TRIP	REAL	0.00 to 300.00 %	50.00 %	rw	
115.03	DELAY	SPD FBK TRIP	REAL	0.00 to 300.00 s	10.00 s	rw	

PREF	Name	Block	Type	Range	Default	ro\rw	Notes
115.04	TRIPPED	SPD FBK TRIP	BOOL	0 : FALSE 1 : TRUE	FALSE	ro	Output
117.01	OWN ID	FIREWIRE	INT	_	99	ro	Output
117.02	IRM ID	FIREWIRE	INT	_	99	ro	Output
117.03	NUMBER OF NODES	FIREWIRE	INT	_	0	ro	Output
117.04	CYCLE TIMER	FIREWIRE	INT	_	0	ro	Output
117.05	BUS RESETS	FIREWIRE	INT	_	0	ro	Output
117.06	MCAP ADVERTS	FIREWIRE	INT	_	0	ro	Output
117.07	MAX HOPS	FIREWIRE	INT	_	0	ro	Output
117.08	OFFSET (40.69ns)	FIREWIRE	INT	_	0	ro	Output
117.13	BAD MESSAGES	FIREWIRE	INT	_	0	ro	Output
117.14	MISSED TX ACKS	FIREWIRE	INT	_	0	ro	Output
117.15	MY BUS RESETS	FIREWIRE	INT	_	0	ro	Output
118.01	INPUT	VIRTUAL MASTER	REAL	-100.00 to 100.00 %	0.00 %	rw	
118.02	ACCELERATION	VIRTUAL MASTER	REAL	0.00 to 1000.00 /s^2	10.00 /s^2	rw	
118.03	DECELERATION	VIRTUAL MASTER	REAL	0.00 to 1000.00 /s^2	10.00 /s^2	rw	
118.04	JERK 1	VIRTUAL MASTER	REAL	0.00 to 100.00 /s^3	10.00 /s^3	rw	
118.05	JERK 2	VIRTUAL MASTER	REAL	0.00 to 100.00 /s^3	10.00 /s^3	rw	
118.06	JERK 3	VIRTUAL MASTER	REAL	0.00 to 100.00 /s^3	10.00 /s^3	rw	
118.07	JERK 4	VIRTUAL MASTER	REAL	0.00 to 100.00 /s^3	10.00 /s^3	rw	
118.08	CONTINUOUS	VIRTUAL MASTER	BOOL	0 : FALSE 1 : TRUE	FALSE	rw	
118.09	HOLD	VIRTUAL MASTER	BOOL	0 : FALSE 1 : TRUE	FALSE	rw	
118.10	SYMMETRIC JERK	VIRTUAL MASTER	BOOL	0 : FALSE 1 : TRUE	FALSE	rw	

PREF	Name	Block	Type	Range	Default	ro\rw	Notes
118.11	RESET	VIRTUAL MASTER	BOOL	0 : FALSE 1 : TRUE	FALSE	rw	
118.12	OFFSET	VIRTUAL MASTER	REAL	0.0000 to 360.0000 deg	0.0000 deg	rw	
118.13	SPEED OUTPUT	VIRTUAL MASTER	REAL	_.xx	0.00 Hz	ro	Output
118.14	POSITION OUTPUT	VIRTUAL MASTER	REAL	_.xxxx	0.0000 deg	ro	Output
118.15	ACCEL OUTPUT	VIRTUAL MASTER	REAL	_.xx	0.00	ro	Output
118.16	RAMPING	VIRTUAL MASTER	BOOL	0 : FALSE 1 : TRUE	FALSE	ro	Output
118.17	CHANNEL	VIRTUAL MASTER	INT	0 to 64	0	rw	
118.18	MAX SPEED	VIRTUAL MASTER	REAL	100.0 to 6000.0 RPM	1500.0 RPM	rw	
118.19	STATUS	VIRTUAL MASTER	ENUM	0 : READY 1 : RESET 2 : DUPLICATE 3 : INITIALISING 4 : NO FIREWIRE 5 : DISABLED 6 : INTERNAL	DISABLED	ro	Output
118.20	SOURCE	VIRTUAL MASTER	ENUM	0 : S RAMP 1 : FEEDBACK ENCODR 2 : REFERNCE ENCODR 3 : LINEAR RAMP	S RAMP	rw	2
118.22	SPEED FILT TIME	VIRTUAL MASTER	REAL	0.0 to 100.0 ms	5.0 ms	rw	
118.23	ACCEL FILT TIME	VIRTUAL MASTER	REAL	0.0 to 100.0 ms	5.0 ms	rw	
119.01	CHANNEL	FIREWIRE REF	INT	0 to 62	0	rw	
119.02	RESET	FIREWIRE REF	BOOL	0 : FALSE 1 : TRUE	FALSE	rw	
119.03	INVERT	FIREWIRE REF	BOOL	0 : FALSE 1 : TRUE	FALSE	rw	
119.04	GEAR RATIO A	FIREWIRE REF	INT	-2000000000 to 2000000000	1000000	rw	
119.05	GEAR RATIO B	FIREWIRE REF	INT	-2000000000 to 2000000000	1000000	rw	

PREF	Name	Block	Type	Range	Default	ro\rw	Notes
119.06	POSITION OUTPUT	FIREWIRE REF	REAL	_.xxxx	0.0000 deg	ro	Output
119.07	SPEED OUTPUT	FIREWIRE REF	REAL	_.xx	0.00 Hz	ro	Output
119.08	ACCEL OUTPUT	FIREWIRE REF	REAL	_.xx	0.00	ro	Output
119.09	MASTER POSITION	FIREWIRE REF	REAL	_.xxxx	0.0000 deg	ro	Output
119.10	MASTER SPEED	FIREWIRE REF	REAL	_.xxxx	0.0000 Hz	ro	Output
119.11	MASTER ACCEL	FIREWIRE REF	REAL	_.xxxx	0.0000	ro	Output
119.12	TIME DIFFERENCE	FIREWIRE REF	REAL	_.xx	0.00 ms	ro	Output
119.13	STATUS	FIREWIRE REF	ENUM	0 : READY 1 : REF RESET 2 : MASTER RESET 3 : LOST SYNC 4 : DUP MASTER 5 : MISSING MASTER 6 : NO FIREWIRE 7 : DISABLED 8 : INTERNAL	NO FIREWIRE	ro	Output
119.14	READY	FIREWIRE REF	BOOL	0 : FALSE 1 : TRUE	FALSE	ro	Output
120.01	ENABLE	PHASE MOVE ABS	BOOL	0 : FALSE 1 : TRUE	FALSE	rw	
120.02	RESET	PHASE MOVE ABS	BOOL	0 : FALSE 1 : TRUE	FALSE	rw	
120.03	MOVE METHOD	PHASE MOVE ABS	ENUM	0 : SHORTEST 1 : FORWARD 2 : BACKWARD	SHORTEST	rw	
120.04	DIRECTION BAND	PHASE MOVE ABS	REAL	0.00 to 1.00	0.05	rw	
120.05	POSITION	PHASE MOVE ABS	REAL	0.0000 to 1.0000	0.0000	rw	
120.06	VELOCITY	PHASE MOVE ABS	REAL	0.10 to 300.00 %	1.00 %	rw	
120.07	ACCELERATION	PHASE MOVE ABS	REAL	0.01 to 3000.00 %	1.00 %	rw	
120.08	ABS POSITION	PHASE MOVE ABS	REAL	_.xxxx	0.0000	ro	Output

PREF	Name	Block	Type	Range	Default	ro\rw	Notes
120.10	ACTIVE	PHASE MOVE ABS	BOOL	0 : FALSE 1 : TRUE	FALSE	ro	Output
120.11	DONE	PHASE MOVE ABS	BOOL	0 : FALSE 1 : TRUE	FALSE	ro	Output
120.12	STATE	PHASE MOVE ABS	ENUM	0 : RESET 1 : READY 2 : POS AQUIRE 3 : ALIGN 4 : DONE	READY	ro	Output
121.01	PROP GAIN	POSITION LOOP	REAL	0.0 to 3000.0	10.0	rw	
121.02	INTEGRAL TIME	POSITION LOOP	REAL	5.0 to 3000.0 ms	500.0 ms	rw	
121.03	INTEGRAL DEFEAT	POSITION LOOP	BOOL	0 : FALSE 1 : TRUE	FALSE	rw	
121.04	POSN LOOP RSPONS	POSITION LOOP	REAL	_.x	100.0 ms	ro	Output
121.05	POSITION ERROR	POSITION LOOP	REAL	_.xxxx	0.0000 deg	ro	Output
121.06	POSITN INTEGRAL	POSITION LOOP	REAL	_.xxxx	0.0000 deg	ro	Output
121.07	ENABLE	POSITION LOOP	BOOL	0 : FALSE 1 : TRUE	FALSE	rw	
121.08	SPD FEEDFORWARD	POSITION LOOP	REAL	_.xxxx	0.0000 Hz	ro	Output
121.09	PID OUTPUT	POSITION LOOP	REAL	_.xxxx	0.0000 Hz	ro	Output
121.10	OUTPUT	POSITION LOOP	REAL	_.xxxx	0.0000 Hz	ro	Output
121.11	LIMIT	POSITION LOOP	REAL	0.00 to 300.00 %	10.00 %	rw	
121.12	LIMITING	POSITION LOOP	BOOL	0 : FALSE 1 : TRUE	FALSE	ro	Output
121.13	FOLLOWING ERROR	POSITION LOOP	REAL	_.xxxx	0.0000 deg	ro	Output
121.14	TOTAL OFFSET	POSITION LOOP	REAL	_.xxxx	0.0000	ro	Output
121.15	POSITION DEMAND	POSITION LOOP	REAL	_.xx	0.00 deg	ro	Output

PREF	Name	Block	Type	Range	Default	ro\rw	Notes
121.16	MODE	POSITION LOOP	ENUM	0 : DISABLED 1 : ENABLED 2 : UNSYNCHRONISED 3 : SYNCHRONISED 4 : ABSOLUTE	DISABLED	ro	Output
122.01	FRICTN AT 0 RPM	INERTIA COMP	REAL	0.00 to 100.00 %	0.00 %	rw	
122.02	FRN AT NMPLT RPM	INERTIA COMP	REAL	0.00 to 100.00 %	0.00 %	rw	
122.03	RELATIVE INERTIA	INERTIA COMP	REAL	0.0000 to 30000.0000 %	0.0000 %	rw	
122.04	FRICTION COMP	INERTIA COMP	REAL	_.xx	0.00 %	ro	Output
122.05	INERTIA COMP	INERTIA COMP	REAL	_.xx	0.00 %	ro	Output
122.06	TORQ FEEDFORWARD	INERTIA COMP	REAL	_.xx	0.00 %	ro	Output
122.07	SPEED PI OUTPUT	INERTIA COMP	REAL	_.xx	0.00 %	ro	Output
123.01	INHIBIT	OVER SPEED TRIP	BOOL	0 : FALSE 1 : TRUE	FALSE	rw	
123.02	THRESHOLD	OVER SPEED TRIP	REAL	0.00 to 300.00 %	150.00 %	rw	
123.03	DELAY	OVER SPEED TRIP	REAL	0.00 to 10.00 s	0.10 s	rw	
123.04	TRIPPED	OVER SPEED TRIP	BOOL	0 : FALSE 1 : TRUE	FALSE	ro	Output
124.01	ENABLE	MOVE TO MASTER	BOOL	0 : FALSE 1 : TRUE	FALSE	rw	
124.02	MOVE METHOD	MOVE TO MASTER	ENUM	0 : SHORTEST 1 : FORWARD 2 : BACKWARD	SHORTEST	rw	
124.03	DIRECTION BAND	MOVE TO MASTER	REAL	0.00 to 200.00	0.05	rw	
124.04	VELOCITY	MOVE TO MASTER	REAL	0.10 to 300.00 %	1.00 %	rw	
124.05	ACCELERATION	MOVE TO MASTER	REAL	0.01 to 3000.00 %	1.00 %	rw	
124.06	DIST TO MASTER	MOVE TO MASTER	REAL	_.xxxx	0.0000	ro	Output

PREF	Name	Block	Type	Range	Default	ro\rw	Notes
124.08	ACTIVE	MOVE TO MASTER	BOOL	0 : FALSE 1 : TRUE	FALSE	ro	Output
124.09	STATE	MOVE TO MASTER	ENUM	0 : RESET 1 : READY 2 : POS AQUIRE 3 : ALIGN 4 : DONE	READY	ro	Output
125.01	EMC CAPACITORS	EMC CAPACITORS	ENUM	0 : CONNECTED 1 : NOT CONNECTED	CONNECTED	rw	2
126.01	BAUDRATE	CANOPEN	ENUM	0 : 125K 1 : 250K 2 : 500K 3 : 1000K	1000K	ro	Output
126.02	ADDRESS	CANOPEN	INT	_	3	ro	Output
126.03	STATUS RUN	CANOPEN	ENUM	0 : STOPPED 1 : PRE-OPERATIONAL 2 : OPERATIONAL	STOPPED	ro	Output
126.04	STATUS ERROR	CANOPEN	ENUM	0 : NO ERROR 1 : WARNING LIMIT 2 : AUTOBAUD OR LSS 3 : CONTROL EVENT 4 : SYNC. ERROR 5 : BUS OFF	NO ERROR	ro	Output
126.05	HARDWARE	CANOPEN	BOOL	0 : FALSE 1 : TRUE	FALSE	ro	Output
126.06	BAUDRATE SOFT	CANOPEN	ENUM	0 : 125K 1 : 250K 2 : 500K 3 : 1000K	1000K	rw	
126.07	ADDRESS SOFT	CANOPEN	INT	1 to 127	1	rw	

PREF	Name	Block	Type	Range	Default	ro\rw	Notes
127.01	BAUDRATE	PROFIBUS	ENUM	0 : 12 Mbits/sec 1 : 6 Mbits/sec 2 : 3 Mbits/sec 3 : 1.5 Mbits/sec 4 : 500 kbits/sec 5 : 187.5 kbits/sec 6 : 93.75 kbits/sec 7 : 45.45 kbits/sec 8 : 19.2 kbits/sec 9 : 9.6 kbits/sec 10 : UNKNOWN	UNKNOWN	ro	Output
127.02	ADDRESS	PROFIBUS	INT	_	0	ro	Output
127.03	STATUS	PROFIBUS	ENUM	0 : MISSING OR FAULT 1 : DISABLED 2 : BAUD SEARCH 3 : WAIT PARAM 4 : WAIT CONFIG 5 : DATA EXCHANGE 6 : DATA EXCH NO WD 7 : DATA EXCH ERROR 8 : DATA EX ER NO WD	MISSING OR FAULT	ro	Output
127.04	ADDRESS METHOD	PROFIBUS	ENUM	0 : SOFTWARE 1 : HARDWARE	HARDWARE	ro	Output
128.01	NODE ADDRESS	CONTROLNET	INT	_	0	ro	Output
128.02	ADDRESS METHOD	CONTROLNET	ENUM	0 : HARDWARE 1 : SOFTWARE	HARDWARE	ro	Output

PREF	Name	Block	Type	Range	Default	ro\rw	Notes
128.03	NETWORK MODE	CONTROLNET	ENUM	0 : INVALID 1 : POWER UP 2 : CHECK FOR CABLE 3 : WAITING 2 ROGUE 4 : CHK 4 MODERATOR 5 : I'M ALIVE 6 : ATTACHED 7 : FORCED LISTEN 8 : DUPLICATE NODE	INVALID	ro	Output
128.04	CONNECTED	CONTROLNET	BOOL	0 : FALSE 1 : TRUE	FALSE	ro	Output
128.05	SERIAL NUMBER	CONTROLNET	INT	_	0	ro	Output
128.06	FAULT	CONTROLNET	BOOL	0 : FALSE 1 : TRUE	FALSE	ro	Output
128.07	DIAGNOSTIC	CONTROLNET	WORD	0000 to FFFF	0000	ro	Output
128.08	FIXED PARAM SET	CONTROLNET	ENUM	0 : NONE	NONE	rw	2
128.09	CNET STATE	CONTROLNET	ENUM	0 : NONE 1 : FAULT 2 : INITIALISE 3 : VM CONFIGURE 4 : WAIT 2 ATTACH 5 : WAIT 2 CONNECT 6 : RUNNING	NONE	ro	Output
129.01	MODE	COMMS PORT	ENUM	0 : AUTOMATIC 1 : 6511 OP STATION 2 : 6901 OP STATION 3 : TS8000 HMI	AUTOMATIC	rw	
130.01	BAUDRATE	DEVICENET	ENUM	0 : 125K 1 : 250K 2 : 500K 3 : INVALID	125K	ro	Output
130.02	MAC ID	DEVICENET	INT	_	63	ro	Output

PREF	Name	Block	Type	Range	Default	ro\rw	Notes
130.03	CONNECTION STATE	DEVICENET	ENUM	0 : NON EXISTENT 1 : SELFTEST 2 : STANDBY 3 : OPERATIONAL 4 : RECOVER FAULT 5 : UNRECOVER FAULT	NON EXISTENT	ro	Output
130.04	DEVICE STATUS	DEVICENET	ENUM	0 : NO ERROR 1 : OWNED 2 : CONFIGURED 3 : MINOR REC FAULT 4 : MINOR UNREC FLT 5 : MAJOR REC FAULT 6 : MAJOR UNREC FLT	NO ERROR	ro	Output
130.05	HARDWARE	DEVICENET	BOOL	0 : FALSE 1 : TRUE	FALSE	ro	Output
130.06	BAUDRATE SOFT	DEVICENET	ENUM	0 : 125K 1 : 250K 2 : 500K	125K	rw	
130.07	MAC ID SOFT	DEVICENET	INT	1 to 63	0	rw	
130.08	UNRECOVER FAULT	DEVICENET	ENUM	0 : NO FAULT 1 : DUPLICATE MAC 2 : RX Q OVERRUN 3 : TX Q OVERRUN 4 : IO SEND ERROR 5 : BUS OFF 6 : CAN OVERRUN 7 : RESET 8 : SWITCH ERROR	NO FAULT	ro	Output
133.01	NAME	RESOLVER	STRING	max length is 16 chars		rw	2
133.02	POLES	RESOLVER	INT	2 to 20	2	rw	2
133.03	RATIO	RESOLVER	REAL	0.20 to 1.00	0.50	rw	
133.04	SPEED MAX	RESOLVER	INT	0 to 2147483647	10000	rw	2
133.05	ACCURACY	RESOLVER	REAL	0.00 to 60.00	20.00	rw	2

PREF	Name	Block	Type	Range	Default	ro\rw	Notes
133.06	CARRIER VOLTAGE	RESOLVER	REAL	1.00 to 10.00 V	7.00 V	rw	2
133.07	CURRENT	RESOLVER	REAL	0.000 to 0.100 A	0.046 A	rw	2
133.08	INERTIA	RESOLVER	REAL	10.00 to 32768.00Kg.cm2	24.00Kg.cm2	rw	2
133.11	POSITION SET UP	RESOLVER	REAL	-180.00 to 180.00 deg	0.00 deg	rw	
133.15	RESOLVER POS OUT	RESOLVER	REAL	_.xxxx	0.0000	ro	Output
133.16	TRIP	RESOLVER	BOOL	0 : FALSE 1 : TRUE	FALSE	ro	Output
133.17	INIT DONE	RESOLVER	BOOL	0 : FALSE 1 : TRUE	FALSE	ro	Output
133.18	REVERSE CNT DIR	RESOLVER	BOOL	0 : FALSE 1 : TRUE	FALSE	rw	2
133.19	SPEED FILTER	RESOLVER	REAL	10.00 to 1000.00 Hz	100.00 Hz	rw	
133.20	PHASE SHIFT	RESOLVER	REAL	0.00 to 180.00 deg	0.00 deg	rw	
133.21	TRIP SELECTION	RESOLVER	ENUM	0 : HARD AND SOFT 1 : HARD 2 : SOFT	SOFT	rw	
133.26	RESET LINE COUNT	RESOLVER	BOOL	0 : FALSE 1 : TRUE	FALSE	rw	
133.27	LINE COUNT X4	RESOLVER	INT	_	0	ro	Output
133.28	PULLEYBELT RATIO	RESOLVER	INT	1 to 100	1	rw	2
134.01	MANUFACTURER	MOTOR PMAC 1	STRING	max length is 16 chars		rw	2
134.02	MODEL	MOTOR PMAC 1	STRING	max length is 16 chars		rw	2
134.03	CONSTRUCTION	MOTOR PMAC 1	ENUM	0 : Axe 1 : Spindle 2 : Torque	Axe	rw	2
134.04	ATMOSPHERE	MOTOR PMAC 1	ENUM	0 : Standard 1 : Explosive	Standard	rw	2
134.05	MAX VOLTAGE	MOTOR PMAC 1	REAL	200 to 640 V	400 V	rw	2

PREF	Name	Block	Type	Range	Default	ro\rw	Notes
134.06	THERM PROTECTION	MOTOR PMAC 1	BOOL	0 : FALSE 1 : TRUE	FALSE	rw	2
134.07	MAX SPEED	MOTOR PMAC 1	INT	0 to 2147483647	4300	rw	2
134.08	MAX CURRENT	MOTOR PMAC 1	REAL	0.00 to 1024.00 A	10.60 A	rw	2
134.09	PERM CURRENT	MOTOR PMAC 1	REAL	0.00 to 1024.00 A	4.90 A	rw	2
134.10	PERM TORQUE	MOTOR PMAC 1	REAL	0.00 to 30000.00 Nm	6.40 Nm	rw	2, 5
134.11	LOW SPEED VALUE	MOTOR PMAC 1	INT	0 to 2147483647	0	rw	2
134.12	POLES	MOTOR PMAC 1	INT	0 to 400	10	rw	2
134.13	BACK EMF	MOTOR PMAC 1	REAL	0.0 to 8192.0 VKRPM	85.6 VKRPM	rw	2
134.14	R	MOTOR PMAC 1	REAL	0.00 to 50.00 Ohm	3.63 Ohm	rw	2
134.17	L	MOTOR PMAC 1	REAL	0.00 to 1000.00 mH	24.30 mH	rw	2
134.18	PHASE	MOTOR PMAC 1	REAL	0.00 to 90.00 deg	0.00 deg	rw	2
134.19	MAX PHASE	MOTOR PMAC 1	REAL	0.00 to 90.00 deg	0.00 deg	rw	2
134.20	MAX TORQUE	MOTOR PMAC 1	REAL	0.00 to 30000.00 Nm	12.80 Nm	rw	2
134.21	KT	MOTOR PMAC 1	REAL	0.0000 to 100.0000 Nm/A	1.3760 Nm/A	rw	2
134.22	IFMB	MOTOR PMAC 1	REAL	-100.0000 to 100.0000 A/Nm3	0.0000 A/Nm3	rw	2
134.23	INERTIA	MOTOR PMAC 1	REAL	0.0000 to 100.0000	0.0011	rw	2
134.24	INERTIA SCALE	MOTOR PMAC 1	ENUM	0 : kgm2 1 : kgcm2 2 : gm2	kgm2	rw	2
134.26	STAND CURRENT	MOTOR PMAC 1	REAL	0.00 to 1024.00 A	10.60 A	rw	2
134.27	THERMAL TIME CST	MOTOR PMAC 1	REAL	0.00 to 10000.00 s	224.80 s	rw	2
134.28	CUR LOOP BWDTH	PMAC MOTOR	REAL	100 to 1500 Hz	600 Hz	rw	
134.29	INTEGRAL FREQ	PMAC MOTOR	REAL	5 to 600 Hz	150 Hz	rw	
134.31	DRIVE_SAFE	MOTOR PMAC 1	BOOL	0 : FALSE 1 : TRUE	FALSE	ro	Output

PREF	Name	Block	Type	Range	Default	ro\rw	Notes
135.01	MPS1	MOTOR PMAC 2	REAL	0 to 600 V	230 V	rw	2
135.02	MPS2	MOTOR PMAC 2	REAL	0 to 600 V	400 V	rw	2
135.03	MPS3	MOTOR PMAC 2	REAL	0 to 600 V	480 V	rw	2
135.04	CURRENT AT MPS1	MOTOR PMAC 2	REAL	0.00 to 1024.00 A	10.60 A	rw	2
135.05	CURRENT AT MPS2	MOTOR PMAC 2	REAL	0.00 to 1024.00 A	10.60 A	rw	2
135.06	CURRENT AT MPS3	MOTOR PMAC 2	REAL	0.00 to 1024.00 A	10.60 A	rw	2
135.07	SPEED AT MPS1	MOTOR PMAC 2	INT	0 to 2147483647	2300	rw	2
135.08	SPEED AT MPS2	MOTOR PMAC 2	INT	0 to 2147483647	4000	rw	2
135.09	SPEED AT MPS3	MOTOR PMAC 2	INT	0 to 2147483647	4800	rw	2
136.01	DRIVE NAME	DRIVE CONFIG	STRING	max length is 14 chars	890 DRIVE	rw	2
136.02	CONTROL MODE	DRIVE CONFIG	ENUM	0 : VOLTS / Hz 1 : SENSORLESS VEC 2 : CLOSED-LOOP VEC 3 : 4-Q REGEN 4 : PMAC	VOLTS / Hz	rw	
136.06	FBK FITTED	DRIVE CONFIG	ENUM	0 : NONE 1 : 8903/RE 8902/RR 2 : 8902/EQ 3 : RS485 INC. ENC. 4 : 8902/E1 5 : 8902/LS 6 : UNKNOWN 7 : 8902/M1 8 : 8902/EP 9 : VMASTER SIM. 10:HTTL ENC. REG. 11:RS485 ENC.REG.	NONE	ro	Output

PREF	Name	Block	Type	Range	Default	ro\rw	Notes
136.09	SLOT A FITTED	DRIVE CONFIG	ENUM	0 : NONE 1 : 8903/FA 2 : 8903/PB 3 : 8903/CN 4 : 8903/CB 5 : UNKNOWN 6 : 8903/EQ 7 : RS485 INC. ENC. 8 : 8903/E1 9 : 8903/DN 10: 8903/AI 11: ANYBUS CC 12: 8903/SP 13: 8903/IM 14: 8903/PN 15: 8903IP 16: 8903/CT 17: 8903/M1 18: 8903/EP 19: 8903/RS 20: 8903/FB	NONE	ro	Output

PREF	Name	Block	Type	Range	Default	ro\rw	Notes
136.12	SLOT B FITTED	DRIVE CONFIG	ENUM	0 : NONE 1 : 8903/FA 2 : 8903/PB 3 : 8903/CN 4 : 8903/CB 5 : UNKNOWN 6 : 8903/EQ 7 : RS485 INC. ENC. 8 : 8903/E1 9 : 8903/DN 10: 8903/AI 11: ANYBUS CC 12: 8903/SP 13: 8903/IM 14: 8903/PN 15: 8903IP 16: 8903/CT 17: 8903/M1 18: 8903/EP 19: 8903/RS 20: 8903/FB	NONE	ro	Output
136.15	PWM FREQ	DRIVE CONFIG	ENUM	0 : 4 KHz 1 : 8 KHz	4 KHz	rw	2
136.19	SUPPLY VOLTAGE	DRIVE CONFIG	ENUM	0 : 230V 1 : 380V TO 480V 2 : 500V 3 : 575V 4 : 690V	380V TO 480V	rw	2
147.01	VALUE	DIGITAL OUTPUT 4	BOOL	0 : FALSE 1 : TRUE	FALSE	rw	
148.01	VALUE	DIGITAL OUTPUT 5	BOOL	0 : FALSE 1 : TRUE	FALSE	rw	
149.01	VALUE	DIGITAL OUTPUT 6	BOOL	0 : FALSE 1 : TRUE	FALSE	rw	

PREF	Name	Block	Type	Range	Default	ro\rw	Notes
156.01	SWITCH ON START	MOT POLARISATION	ENUM	0 : MANUAL	MANUAL	rw	
156.02	POLARISATION	MOT POLARISATION	ENUM	0 : DISABLE 1 : ENABLE	DISABLE	rw	1
156.03	POLAR START	MOT POLARISATION	BOOL	0 : FALSE 1 : TRUE	FALSE	rw	1
156.04	TYPE	MOT POLARISATION	ENUM	0 : 1:STANDARD	1:STANDARD	rw	1
156.05	1:MOTOR PHASE	MOT POLARISATION	ENUM	0 : U PHASE 1 : V PHASE 2 : W PHASE	U PHASE	rw	1
156.06	1:MOT CUR PCNT	MOT POLARISATION	REAL	0.00 to 100.00 %	50.00 %	rw	1
156.07	1:MOT CUR RAMP	MOT POLARISATION	REAL	0.00 to 20.00 s	1.00 s	rw	1
156.16	ELEC POS OFFSET	MOT POLARISATION	REAL	-180.0000 to 180.0000 deg	0.0000 deg	rw	1
156.17	ELEC POS	MOT POLARISATION	REAL	_.xxxx	0.0000 deg	ro	Output
156.18	CURRENT	MOT POLARISATION	REAL	_.xxxx	0.0000 A	ro	Output
156.19	STATE	MOT POLARISATION	ENUM	0 : NORMAL 1 : POLARIZING 2 : ENDED OK 3 : ENDED NOT OK	NORMAL	ro	Output
158.01	PULSE ENC VOLTS	REFERNCE ENCODER	REAL	10.0 to 20.0 V	10.0 V	rw	
158.02	ENCODER LINES	REFERNCE ENCODER	INT	32 to 262143	2048	rw	2
158.03	ENCODER INVERT	REFERNCE ENCODER	BOOL	0 : FALSE 1 : TRUE	FALSE	rw	

PREF	Name	Block	Type	Range	Default	ro\rw	Notes
158.04	ENCODER TYPE	REFERNCE ENCODER	ENUM	0 : QUADRATURE 1 : CLOCK/DIR 2 : CLOCK 3 : QUADRATURE DIFF 4 : CLOCK/DIR DIFF 5 : CLOCK DIFF 6 : SINCOS INC 7 : ABS ENDAT ST 8 : ABS ENDAT MT	QUADRATUR E DIFF	rw	2
158.05	OUTPUT GBOX IN	REFERNCE ENCODER	INT	1 to 2000000000	1	rw	2, 5
158.06	ENCODER MECH O/S	REFERNCE ENCODER	REAL	0.0000 to 360.0000 deg	0.0000 deg	rw	2
158.08	ENCODER FBK %	REFERNCE ENCODER	REAL	_.xx	0.00 %	ro	Output
158.09	SHAFT POSITION	REFERNCE ENCODER	REAL	_.xx	0.00 deg	ro	Output
158.10	LOAD POSITION	REFERNCE ENCODER	REAL	_.xx	0.00 deg	ro	Output
158.13	CALIBRATN STATUS	REFERNCE ENCODER	ENUM	0 : NOT REQUIRED 1 : DRIVE NOT STOPD 2 : MOTOR NOT STOPD 3 : ENDAT FAULT 4 : CAL IN PROGRESS 5 : LD PSN IN PRGRSS 6 : COMPLETED 7 : CALIBRATION LOST 8 : CALIBRATN FAILED	NOT REQUIRED	ro	Output
158.15	REV COUNT	REFERNCE ENCODER	INT	_	0	ro	Output
158.22	SINCOS ENC VOLTS	REFERNCE ENCODER	ENUM	0 : 5V 1 : 10V	5V	rw	2
158.23	RESET LINE COUNT	REFERNCE ENCODER	BOOL	0 : FALSE 1 : TRUE	FALSE	rw	
158.24	CAL FAIL RETRY	REFERNCE ENCODER	BOOL	0 : FALSE 1 : TRUE	FALSE	rw	2
158.26	OUTPUT GBOX OUT	REFERNCE ENCODER	INT	-2000000000 to 2000000000	1	rw	2

PREF	Name	Block	Type	Range	Default	ro\rw	Notes
158.30	ENCODER FEEDBACK	REFERNCE ENCODER	REAL	_.xx	0.00 RPM	ro	Output
158.31	LINE COUNT X4	REFERNCE ENCODER	INT	_	0	ro	Output
160.01	RUN SIMULATOR	SYNTHETIC ENCODER	ENUM	0 : OFF 1 : RUN SYNTH ENCDR 2 : RPEAT FBK ENCDR 3 : RPEAT REF ENCDR	OFF	rw	2
160.02	ENCODER LINES	SYNTHETIC ENCODER	INT	4 to 65536	1024	rw	2
160.03	ENCODR DIRECTION	SYNTHETIC ENCODER	ENUM	0 : SAME AS SOURCE 1 : REVERSE OF SRCE	SAME AS SOURCE	rw	2
160.04	V MASTER INPUT	SYNTHETIC ENCODER	ENUM	0 : RUNS FORWARD 1 : RUNS REVERSE	RUNS FORWARD	rw	2
160.05	Z PULSE OFFSET	SYNTHETIC ENCODER	REAL	0.0000 to 360.0000 deg	0.0000 deg	rw	
160.09	SOURCE	SYNTHETIC ENCODER	ENUM	0 : V MASTER POSN 1 : FBK ENCR LOAD 2 : FBK ENCR LOAD 3 : REF ENCR SHAFT 4 : REF ENCR LOAD	V MASTER POS'N	rw	2
161.01	I2T INHIBIT	MOT PMAC PROTECT	BOOL	0 : FALSE 1 : TRUE	FALSE	rw	
161.02	I2T LIMIT MOTOR	MOT PMAC PROTECT	BOOL	0 : FALSE 1 : TRUE	FALSE	ro	Output
161.03	I2T MOTOR LOAD	MOT PMAC PROTECT	REAL	_.x	0.0 %	ro	Output
161.04	MOTOR I2T TRIP	MOT PMAC PROTECT	BOOL	0 : FALSE 1 : TRUE	FALSE	ro	Output
162.01	AIMING POINT	INVERS TIME PMAC	REAL	50.00 to 105.00 %	105.00 %	rw	
162.02	DELAY	INVERS TIME PMAC	REAL	0.5 to 4.0 s	4.0 s	rw	
162.03	DOWN TIME	INVERS TIME PMAC	REAL	0.5 to 2.0 s	1.0 s	rw	
162.04	UP TIME	INVERS TIME PMAC	REAL	0.5 to 2.0 s	1.0 s	rw	

PREF	Name	Block	Type	Range	Default	ro\rw	Notes
162.05	IT LIMITING	INVERS TIME PMAC	BOOL	0 : FALSE 1 : TRUE	FALSE	ro	Output
162.06	INVERSE TIME OP	INVERS TIME PMAC	REAL	_.xx	0.00 %	ro	Output
162.07	IT WARNING	INVERS TIME PMAC	BOOL	0 : FALSE 1 : TRUE	FALSE	ro	Output
163.01	SELECT TQ COMP 2	SPEED LOOP 2	ENUM	0 : NONE 1 : MAX ATTENUATION 2 : MINIMUM PHASE 3 : NOTCH FILTER	NONE	rw	2
163.02	TQ COMP 2 FREQ	SPEED LOOP 2	REAL	100 to 8000 Hz	2000 Hz	rw	
163.03	SELECT TQ COMP 3	SPEED LOOP 2	ENUM	0 : NONE 1 : MAX ATTENUATION 2 : MINIMUM PHASE 3 : NOTCH FILTER	NONE	rw	2
163.04	TQ COMP 3 FREQ	SPEED LOOP 2	REAL	100 to 8000 Hz	2000 Hz	rw	
165.01	CUST ALARM 1	CUSTOM TRIPS	BOOL	0 : FALSE 1 : TRUE	FALSE	rw	
165.02	CUST ALARM 2	CUSTOM TRIPS	BOOL	0 : FALSE 1 : TRUE	FALSE	rw	
165.03	CUST ALARM 3	CUSTOM TRIPS	BOOL	0 : FALSE 1 : TRUE	FALSE	rw	
165.04	CUST ALARM 4	CUSTOM TRIPS	BOOL	0 : FALSE 1 : TRUE	FALSE	rw	
165.05	CUST ALARM 5	CUSTOM TRIPS	BOOL	0 : FALSE 1 : TRUE	FALSE	rw	
165.06	CUST ALARM 6	CUSTOM TRIPS	BOOL	0 : FALSE 1 : TRUE	FALSE	rw	
165.07	CUST ALARM 7	CUSTOM TRIPS	BOOL	0 : FALSE 1 : TRUE	FALSE	rw	

PREF	Name	Block	Type	Range	Default	ro\rw	Notes
165.08	CUST TRIP 1	CUSTOM TRIPS	BOOL	0 : FALSE 1 : TRUE	FALSE	rw	
165.09	CUST TRIP 2	CUSTOM TRIPS	BOOL	0 : FALSE 1 : TRUE	FALSE	rw	
165.10	CUST TRIP 3	CUSTOM TRIPS	BOOL	0 : FALSE 1 : TRUE	FALSE	rw	
165.11	CUST TRIP 4	CUSTOM TRIPS	BOOL	0 : FALSE 1 : TRUE	FALSE	rw	
165.12	CUST TRIP 5	CUSTOM TRIPS	BOOL	0 : FALSE 1 : TRUE	FALSE	rw	
165.13	CUST TRIP 6	CUSTOM TRIPS	BOOL	0 : FALSE 1 : TRUE	FALSE	rw	
165.14	CUST TRIP 7	CUSTOM TRIPS	BOOL	0 : FALSE 1 : TRUE	FALSE	rw	
165.15	CUST NAME 1	CUSTOM TRIPS	STRING	max length is 16 chars		rw	
165.16	CUST NAME 2	CUSTOM TRIPS	STRING	max length is 16 chars		rw	
165.17	CUST NAME 3	CUSTOM TRIPS	STRING	max length is 16 chars		rw	
165.18	CUST NAME 4	CUSTOM TRIPS	STRING	max length is 16 chars		rw	
165.19	CUST NAME 5	CUSTOM TRIPS	STRING	max length is 16 chars		rw	
165.20	CUST NAME 6	CUSTOM TRIPS	STRING	max length is 16 chars		rw	
165.21	CUST NAME 7	CUSTOM TRIPS	STRING	max length is 16 chars		rw	
177.01	RTNX IP ADDRESS	ETHERNET	STRING	XXX.XXX.XXX.XXX		ro	Output

PREF	Name	Block	Type	Range	Default	ro\rw	Notes
177.02	STATE	ETHERNET	ENUM	0 : UNKNOWN 1 : SETUP 2 : INITIALISATION 3 : WAIT PROCESS 4 : IDLE 5 : PROCESS ACTIVE 6 : ERROR 7 : EXCEPTION 8 : WAIT TO CONNECT 9 : STOPPED 10 : RUNNING 11 : FAULT 12 : NOT ACTIVE 13 : ACTIVE 14 : NOT SUPPORTED 15 : INIT OR PREOP 16 : OPERATIONAL 17 : SAFE-OP	UNKNOWN	ro	Output
177.03	890 IP ADDRESS	ETHERNET	STRING	XXX.XXX.XXX.XXX		ro	Output
177.04	890 SUBNET MASK	ETHERNET	STRING	XXX.XXX.XXX.XXX		ro	Output
177.05	890 GATEWAY	ETHERNET	STRING	XXX.XXX.XXX.XXX		ro	Output
177.06	FTP ENABLED	ETHERNET	BOOL	0 : FALSE 1 : TRUE	FALSE	ro	Output
177.07	ADMIN ENABLED	ETHERNET	BOOL	0 : FALSE 1 : TRUE	FALSE	ro	Output
177.08	MAC ADDRESS	ETHERNET	STRING	XX XX XX XX XX XX		ro	Output
177.09	NETWORK TYPE	ETHERNET	ENUM	0 : NONE 1 : UNKNOWN 2 : ETHERNET IP 3 : MODBUS TCP 4 : PROFINET IO 5 : ETHERCAT	NONE	ro	Output
178.01	PHYSICAL ADDR	PEER TO PEER	INT	0 to 63	0	ro	Output

PREF	Name	Block	Type	Range	Default	ro\rw	Notes
178.02	NET ADDR	PEER TO PEER	INT	0 to 255	0	ro	Output
178.03	STATUS	PEER TO PEER	ENUM	0 : UNKNOWN 1 : ERROR 2 : DUP PHY ADDR 3 : INITIALISING 4 : NO BUS 5 : NO MASTER 6 : OPERATING	UNKNOWN	ro	Output
178.04	BAUDRATE	PEER TO PEER	ENUM	0 : INVALID 1 : 250K 2 : 500K 3 : 800K 4 : 1000K	INVALID	ro	Output
178.05	LAST PHY ADDR	PEER TO PEER	INT	0 to 63	0	ro	Output
178.06	DIAGNOSTIC	PEER TO PEER	WORD	0000 to FFFF	0000	ro	Output
179.06	VALUE	ANALOG INPUT	REAL	_.xxxx	0.0000 %	ro	Output
179.08	FITTED	ANALOG INPUT	BOOL	0 : FALSE 1 : TRUE	FALSE	ro	Output
182.01	STATUS	MODBUS RTU	ENUM	0: UNKNOWN 1: CONFIGURING 2: NOT ACTIVE 3: ACTIVE	UNKNOWN	ro	Output
182.02	NODE ADDRESS	MODBUS RTU	INT	_	0	ro	Output

PREF	Name	Block	Type	Range	Default	ro\rw	Notes
182.03	BAUD RATE	MODBUS RTU	ENUM	0: UNKNOWN 1: 1200 2: 2400 3: 4800 4: 7200 5: 9600 6: 14400 7: 19200 8: 38400 9: 57600 10: 115200	UNKNOWN	ro	Output
182.04	DATA BITS	MODBUS RTU	INT	_	0	ro	Output
182.05	PARITY	MODBUS RTU	ENUM	0: NONE 1: ODD 2: EVEN	NONE	ro	Output
182.06	STOP BITS	MODBUS RTU	ENUM	0: UNKNOWN 1: ONE 2: TWO	UNKNOWN	ro	Output
182.07	TIMEOUT	MODBUS RTU	REAL	_	0 ms	Ro	Output
182.08	WORD ORDER	MODBUS RTU	ENUM	0: LOW WORD FIRST 1: HIGH WORD FIRST	LOW WORD FIRST	ro	Output
182.09	RX GOOD COUNT	MODBUS RTU	INT	_	0	ro	Output
182.10	LAST TX STATUS	MODBUS RTU	ENUM	0: OK 1: ILLEGAL FUNCTION 2: ILLEGAL ADDRESS 3: ILLEGAL DATA VAL	OK	ro	Output

PREF	Name	Block	Type	Range	Default	ro\rw	Notes
182.11	LAST TX ERROR	MODBUS RTU	ENUM	0: NONE 1: ILLEGAL FUNCTION 2: ILLEGAL ADDRESS 3: ILLEGAL DATA VAL	NONE	ro	Output
182.12	EXCEPTION COUNT	MODBUS RTU	INT	_	0	ro	Output
182.13	CRC ERROR COUNT	MODBUS RTU	INT	_	0	ro	Output
182.14	CHAR ERR COUNT	MODBUS RTU	INT	_	0	ro	Output
182.15	DATA EXD COUNT	MODBUS RTU	INT	_	0	ro	Output
182.16	RX ABORT COUNT	MODBUS RTU	INT	_	0	ro	Output
182.17	RESET COUNTERS	MODBUS RTU	BOOL	0: FALSE 1: TRUE	FALSE	rw	1

Product Related Default Values

The Default values in the tables below are correct for when a 2.2kW Frame B power board is fitted.

* Frequency Dependent Defaults

These parameter values (marked with "*" in function block descriptions) are dependent upon the drive's default motor BASE FREQUENCY.

Parameter	Function Block	PREF	Default	
			50Hz Operation	60Hz Operation
BASE FREQUENCY	MOTOR INDUCTION	27.03	50.0Hz	60.0Hz
MOTOR CONNECTION	MOTOR INDUCTION	27.08	STAR	STAR
MOTOR VOLTAGE	MOTOR INDUCTION	27.04	*	*
NAMEPLATE RPM	MOTOR INDUCTION	27.07	1420 RPM	1750 RPM
MAX SPEED	REFERENCE	101.08	1500 RPM	1800 RPM
230V, 400V or 500V depending upon the power build of the unit - refer to the Model Number on the Product Label.				

Note ***Refer to Chapter 8: "The Keypad" - Changing the Product Code (3-button reset).***

Appendix E

Technical Specifications

- Understanding the Product Code
- Electrical Ratings
- Earthing/Safety Details
- Cabling Requirements for EMC Compliance
- External AC Supply (RFI) Filter
- AC Line Choke
- Internal Dynamic Brake Switch (Frame G)
- Internal Dynamic Brake Switch (Frame H)
- Internal Dynamic Brake Switch (Frame J)
- Analog Inputs/Outputs
- Digital Inputs
- Digital Outputs
- Relay Outputs
- Reference Outputs
- User 24V Supply
- Auxiliary Power Supply Load Requirements
- Wire Sizes (Europe)
- Wire Sizes (US/Canada)
- UL Terminations
- 890SD Branch Protection Fuses (North America)
- 890 Control Board Firmware and Hardware Compatibility

Understanding the Product Code

Each unit is identified using an alphanumeric code which records how the unit was configured when dispatched from the factory. Each block of the Model Number is identified as below using a 7 block short code (shaded) and a 9 or 12 block long code. The short code defines the "base build" product and the long code defines the configuration including options.

Example Model Number:

LONG CODE →

890SD/4/0216G/1F/00/S/UK/00/00/EQ/PB/FA

SHORT CODE →

Block 1	**890SD**	This is a standard 890SD Standalone Drive
Block 2	**4**	Nominal input voltage rating is 400V
Block 3	**0216G**	Current rating (continuous output RMS Amps) : 216 Amps Physical frame size G
Block 4	**B**	Supplied with braking control - external resistors required
Block 5	**1F**	110Vac fan(s) fitted
Block 6	**S**	Standard performance level
Block 7	**UK**	Destination is the United Kingdom (English documentation and 50Hz settings)
Block 8	**00**	SSD standard livery
Block 9	**00**	Special options : none fitted
Block 10	**EQ**	Feedback Option : Encoder Quadrature incremental
Block 11	**PB**	Communications Option - Slot A: ProfiBus
Block 12	**FA**	Communications Option - Slot B: FireWire IEEE 1394A

Model Number		
Block	Variable	Description
1	890XX	Generic product: 890 = Standard Product C890 = Conformal Coated PCB's 890SD = Standalone Drive
2	X	One number specifying the nominal input voltage rating: 4 = 400 Vac
3	XXXXX	Four numbers specifying the nominal current in Amps and one character indicating size frame **Current Rating (Continuous Output RMS Amps in Induction Motor Mode)** 0216G = 175 HP@460Vac/110kW@400Vac: Frame G 0250G = 200 HP@460Vac/132kW@400Vac: Frame G 0316G = 250 HP@460Vac/160kW@400Vac: Frame G 0361G = 300 HP@460Vac/180kW@400Vac: Frame G 0375H = 300 HP@460Vac/200kW@400Vac: Frame H 0420H = 350 HP@460Vac/220kW@400Vac: Frame H 0480H = 400 HP@460Vac/250kW@400Vac: Frame H 0520H = 450 HP@460Vac/280kW@400Vac: Frame H 0590J = 500 HP@460Vac/315kW@400Vac: Frame J
4	X	One character specifying the Dynamic Braking Option: N = No Braking Control B = Braking Switch included
5	XX	Two characters specifying the Internal Fan Option: 00 = Not applicable 1F = 110Vac fan(s) fitted 2F = 230Vac fan(s) fitted

Model Number		
Block	Variable	Description
6	X	One character specifying the Performance Level: A = Advanced - Standard Level plus: *Advanced LINK macro blocks such as SPW/CPW winder control and Electronic Gearing. Industry standard motion commands supported such as Move Incremental, Move Absolute etc... PLCOpen(like) programming environment.* H = High Performance - Advanced Level plus: *Application specific LINK macro blocks Cut-to-Length and Shaftless Printing.*
7	XX	Two characters specifying the destination: UK = United Kingdom, 50Hz US = United States, 60Hz
8	XX	Two characters specifying the livery (Brand Label Partners - 01 thru 99): 00 = SSD Standard
9	XX	Two characters specifying special options: 00 = None fitted
10	XX	Two characters specifying the Feedback Option (8902 product) for OPTION F slot: EQ = Encoder Quadrature Incremental E1 = EnDat Encoder (Sin/Cos Type, V2.1) RE = REsolver (Standard for Servo) RR = Resolver Repeater M1 = Mark Registration (Endat 2.1) 00 = Not Fitted : blanking panel fitted

Model Number		
Block	Variable	Description
11	XX	Two characters specifying the Communications Option (8903 product) for OPTION A slot: DN = DeviceNet Fieldbus Communications PB = ProfiBus Fieldbus Communications CN = ControlNet Fieldbus Communications CB = CanOpen FieldBus Communications IM = Modbus/TCP IP = Ethernet/IP PN = ProfiNet I/O CT = EtherCAT RS = RS485 (Modbus RTU) M1 = Mark Registration (Endat 2.1) 00 = Not Fitted: blanking panel fitted
12	XX	Two characters specifying the Communications Option (8903 product) for OPTION B slot: SP = Peer - Peer FA = FireWire IEEE1394A, 890 LAN Communications 00 = Not Fitted: blanking panel fitted

Notes for Electrical Rating Tables

Read these notes in conjunction with the following Electrical Rating tables.

1. **IMPORTANT : 3% line impedance MUST be provided for each unit,** and is assumed in the quoted input current values. Failure to do so will severely shorten DC link capacitor lifetime and could result in damage to the inverter. Refer to AC Line Choke table.

2. Input currents for kW ratings are at 400V 50Hz ac input, and for Hp ratings at 460V 60Hz ac input.

3. Short circuit protection Semiconductor Fuses should be installed in the 3-phase supply to the drive module to protect the input bridge. Circuit breakers or HRC fuses will not protect the input bridge.

4. Fundamental Input Power Factor : 0.95

5. Output Voltage (maximum) = Input Voltage

6. Output Frequency : 0 to 120Hz

7. Fan Inlet Temperature Range : 0 to 40°C

8. Earth Leakage Current : >>100mA. Product must be permanently earthed.

9. True value given, note that the MMI will display 3kHz

Electrical Ratings (Induction): 890SD Frame G, 400V

Power Supply = 380-460V ±10%, 50/60Hz ±5%

Motor power, output current and input current must not be exceeded under steady state operating conditions.

Suitable for earth referenced (TN) and non-earth referenced (IT) supplies.

Model Number (Europe) New Code Shaded Old Code no shading	Model Number (North America)	Motor Power	Output Current (A)	AC Input Current (A) *(notes 1 & 2)*	Heatsink Power Loss (W)	Total Power Loss (W)	Maximum Switching Frequency (kHz) *(note 9)*	Input Bridge I^2t (A^2s)
FRAME G :	Prospective short circuit current 100kA maximum.							
Constant Torque	Output Overload Motoring 150% overload for 60 seconds (all vector modes)			180% for 1s (V/Hz mode)				
890SD-433216G0/..		110kW	216	216	2097	2426	2.5	304000
890SD/4/0216G/..								
	890SD/4/0216G/..	175hp	216	186			2.5	304000
890SD-433250G0/..		132kW	250	246	2598	2912	2.5	304000
890SD/4/0250G/..								
	890SD/4/0250G/..	200hp	250	236			2.5	304000
890SD-433316G0/..		160kW	316	305	3169	3500	2.5	813000
890SD/4/0316G/..								
	890SD/4/0316G/..	250hp	316	307			2.5	813000
890SD-433361G0/..		180kW	361	336	3347	3723	2.5	813000
890SD/4/0361G/..								
	890SD/4/0361G/..	300hp	361	358			2.5	813000

Electrical Ratings (Induction): 890SD Frame G, 400V

Power Supply = 380-460V ±10%, 50/60Hz ±5%

Motor power, output current and input current must not be exceeded under steady state operating conditions.

Suitable for earth referenced (TN) and non-earth referenced (IT) supplies.

Model Number (Europe) New Code Shaded Old Code no shading	Model Number (North America)	Motor Power	Output Current (A)	AC Input Current (A) *(notes 1 & 2)*	Heatsink Power Loss (W)	Total Power Loss (W)	Maximum Switching Frequency (kHz) *(note 9)*	Input Bridge I^2t (A^2s)
FRAME G :	Prospective short circuit current 100kA maximum.							
Quadratic Torque	Output Overload Motoring 110% for 60s (V/Hz mode)							
890SD/4/0216G/..		132kW	260	247	2590	2920	2.5	304000
	890SD/4/0216G/..	200hp	260	239			2.5	304000
890SD/4/0250G/..		150kW	302	297	3169	3482	2.5	304000
	890SD/4/0250G/..	250hp	302	288			2.5	304000
890SD/4/0316G/..		180kW	361	341	3635	3967	2.5	813000
	890SD/4/0316G/..	300hp	361	358			2.5	813000
890SD/4/0361G/..		220kW	420	402	4032	4409	2.5	813000
	890SD/4/0361G/..	350hp	420	411			2.5	813000

Electrical Ratings (Induction): 890SD Frame H, 400V

Power Supply = 380-460V ±10%, 50/60Hz ±5%

Motor power, output current and input current must not be exceeded under steady state operating conditions.

Suitable for earth referenced (TN) and non-earth referenced (IT) supplies.

Model Number (Europe)	Model Number (North America)	Motor Power	Output Current (A)	AC Input Current (A) *(notes 1 & 2)*	Heatsink Power Loss (W)	Total Power Loss (W)	Maximum Switching Frequency (kHz) *(note 9)*	Input Bridge I^2t (A^2s)
FRAME H :	Prospective short circuit current 100kA maximum.							
Constant Torque	Output Overload Motoring 150% overload for 60 seconds (all vector modes)					180% for 1s (V/Hz mode)		
890SD/4/0375H/..	890SD/4/0375H/..	200kW	375	367	3566	3954	2.5	813000
890SD/4/0420H/..	890SD/4/0420H/..	220kW	420	400	4030	4418	2.5	813000
		350hp	420	409			2.5	813000
890SD/4/0480H/..	890SD/4/0480H/..	250kW	480	466	4559	4984	2.5	813000
		400hp	480	477			2.5	813000
890SD/4/0520H/..	890SD/4/0520H/..	280kW	520	516	5031	5469	2.5	813000
		450hp	520	529			2.5	813000

Electrical Ratings (Induction): 890SD Frame H, 400V

Power Supply = 380-460V ±10%, 50/60Hz ±5%

Motor power, output current and input current must not be exceeded under steady state operating conditions.

Suitable for earth referenced (TN) and non-earth referenced (IT) supplies.

Model Number (Europe)	Model Number (North America)	Motor Power	Output Current (A)	AC Input Current (A) *(notes 1 & 2)*	Heatsink Power Loss (W)	Total Power Loss (W)	Maximum Switching Frequency (kHz) *(note 9)*	Input Bridge I^2t (A^2s)
FRAME H :	Prospective short circuit current 100kA maximum.							
Quadratic Torque	Output Overload Motoring 110% for 60s (V/Hz mode)							
890SD/4/0375H/..	890SD/4/0375H/..	250kW	480	450	4704	5092	2.5	813000
890SD/4/0420H/..	890SD/4/0420H/..	250kW 400hp	480 480	450 461	4704	5092	2.5 2.5	813000 813000
890SD/4/0480H/..	890SD/4/0480H/..	300kW 450hp	545 545	545 529	5317	5743	2.5 2.5	813000 813000
890SD/4/0520H/..	890SD/4/0520H/..	315kW 500hp	590 590	571 581	5761	6200	2.5 2.5	813000 813000

Electrical Ratings (Induction): 890SD Frame J, 400V

Power Supply = 380-500V ±10%, 50/60Hz ±5%

Motor power, output current and input current must not be exceeded under steady state operating conditions.

Suitable for earth referenced (TN) and non-earth referenced (IT) supplies.

Model Number (Europe)	Model Number (North America)	Motor Power	Output Current (A)	AC Input Current (A) *(notes 1 & 2)*	Heatsink Power Loss (W)	Total Power Loss (W)	Maximum Switching Frequency (kHz) *(note 9*	Input Bridge I^2t (A^2s)
FRAME J :	Prospective short circuit current 100kA maximum.							
Constant Torque	Output Overload Motoring 150% overload for 60 seconds (all vector modes) 180% for 1s (V/Hz mode)							
890SD/4/0590J/..		315kW	590	576	5788	6260	2.5	813000
	890SD/4/0590J/..	500hp	590	584			2.5	813000
Quadratic Torque	Output Overload Motoring 110% for 60s (V/Hz mode)							
890SD/4/0590J/..		355kW	650	642	6479	6951	2.5	813000
	890SD/4/0590J/..	550hp	650	636			2.5	813000

Electrical Ratings (Servo): 890SD Frame G, 400V

Power Supply = 380-460V ±10%, 50/60Hz ±5%

Motor power, output current and input current must not be exceeded under steady state operating conditions.

Suitable for earth referenced (TN) and non-earth referenced (IT) supplies.

Model Number (Europe)	Model Number (North America)	Motor Power	Output Current (A)	AC Input Current (A) *(notes 1 & 2)*	Heatsink Power Loss (W)	Total Power Loss (W)	Maximum Switching Frequency (kHz) *(note 9)*	Input Bridge I^2t (A^2s)
FRAME G :	Prospective short circuit current 100kA maximum.							
Constant Torque	Output Overload Motoring 150% overload for 60 seconds (PMAC mode)							
890SD/4/0216G/..		110kW	153	216	2097	2426	4	304000
	890SD/4/0216G/..	175hp	153	186			4	304000
890SD/4/0250G/..		132kW	171	246	2598	2912	4	304000
	890SD/4/0250G/..	200hp	171	236			4	304000
890SD/4/0316G/..		160kW	224	305	3169	3500	4	813000
	890SD/4/0316G/..	250hp	224	307			4	813000
890SD/4/0361G/..		180kW	253	336	3347	3723	4	813000
	890SD/4/0361G/..	300hp	253	358			4	813000

Electrical Ratings (Servo): 890SD Frame G, 400V

Power Supply = 380-460V ±10%, 50/60Hz ±5%

Motor power, output current and input current must not be exceeded under steady state operating conditions.

Suitable for earth referenced (TN) and non-earth referenced (IT) supplies.

Model Number (Europe)	Model Number (North America)	Motor Power	Output Current (A)	AC Input Current (A) *(notes 1 & 2)*	Heatsink Power Loss (W)	Total Power Loss (W)	Maximum Switching Frequency (kHz) *(note 9)*	Input Bridge I^2t (A^2s)
FRAME G :	Prospective short circuit current 100kA maximum.							
Quadratic Torque	Output Overload Motoring 110% for 60s (PMAC mode)							
890SD/4/0216G/..		132kW	210	247	2590	2920	4	304000
	890SD/4/0216G/..	200hp	210	239			4	304000
890SD/4/0250G/..		150kW	237	297	3169	3482	4	304000
	890SD/4/0250G/..	250hp	237	288			4	304000
890SD/4/0316G/..		180kW	286	341	3635	3967	4	813000
	890SD/4/0316G/..	300hp	286	358			4	813000
890SD/4/0361G/..		220kW	331	402	4032	4409	4	813000
	890SD/4/0361G/..	350hp	331	411			4	813000

Electrical Ratings (Servo): 890SD Frame H, 400V

Power Supply = 380-460V ±10%, 50/60Hz ±5%

Motor power, output current and input current must not be exceeded under steady state operating conditions.

Suitable for earth referenced (TN) and non-earth referenced (IT) supplies.

Model Number (Europe)	Model Number (North America)	Motor Power	Output Current (A)	AC Input Current (A) *(notes 1 & 2)*	Heatsink Power Loss (W)	Total Power Loss (W)	Maximum Switching Frequency (kHz) *(note 9)*	Input Bridge I^2t (A^2s)
FRAME H :	Prospective short circuit current 100kA maximum.							
Constant Torque	Output Overload Motoring 150% overload for 60 seconds (PMAC mode)							
890SD/4/0375H/..		200kW	268	367	3566	3954	4	813000
	890SD/4/0375H/..							
890SD/4/0420H/..		220kW	300	400	4030	4418	4	813000
	890SD/4/0420H/..	350hp	300	409			4	813000
890SD/4/0480H/..		250kW	336	466	4559	4984	4	813000
	890SD/4/0480H/..	400hp	336	477			4	813000
890SD/4/0520H/..		280kW	368	516	5031	5469	4	813000
	890SD/4/0520H/..	450hp	368	529			4	813000

Electrical Ratings (Servo): 890SD Frame H, 400V

Power Supply = 380-460V ±10%, 50/60Hz ±5%

Motor power, output current and input current must not be exceeded under steady state operating conditions.

Suitable for earth referenced (TN) and non-earth referenced (IT) supplies.

Model Number (Europe)	Model Number (North America)	Motor Power	Output Current (A)	AC Input Current (A) *(notes 1 & 2)*	Heatsink Power Loss (W)	Total Power Loss (W)	Maximum Switching Frequency (kHz) *(note 9)*	Input Bridge I^2t (A^2s)
FRAME H :	Prospective short circuit current 100kA maximum.							
Quadratic Torque	Output Overload Motoring 110% for 60s (PMAC mode)							
890SD/4/0375H/..	890SD/4/0375H/..	250kW	343	450	4704	5092	4	813000
890SD/4/0420H/..	890SD/4/0420H/..	250kW 400hp	383 383	450 461	4704	5092	4 4	813000 813000
890SD/4/0480H/..	890SD/4/0480H/..	300kW 450hp	428 428	545 529	5317	5743	4 4	813000 813000
890SD/4/0520H/..	890SD/4/0520H/..	315kW 500hp	465 465	571 581	5761	6200	4 4	813000 813000

Electrical Ratings (Servo): 890SD Frame J, 400V

Power Supply = 380-500V ±10%, 50/60Hz ±5%

Motor power, output current and input current must not be exceeded under steady state operating conditions.

Suitable for earth referenced (TN) and non-earth referenced (IT) supplies.

Model Number (Europe)	Model Number (North America)	Motor Power	Output Current (A)	AC Input Current (A) *(notes 1 & 2)*	Heatsink Power Loss (W)	Total Power Loss (W)	Maximum Switching Frequency (kHz) *(note 9*	Input Bridge I^2t (A^2s)
FRAME J :	Prospective short circuit current 100kA maximum.							
Constant Torque	Output Overload Motoring 150% overload for 60 seconds (PMAC mode)							
890SD/4/0590J/..		315kW	411	576	5788	6260	4	813000
	890SD/4/0590J/..	500hp	411	584			4	813000
Quadratic Torque	Output Overload Motoring 110% for 60s (PMAC mode)							
890SD/4/0590J/..		355kW	471	642	6479	6951	4	813000
	890SD/4/0590J/..	550hp	471	636			4	813000

Earthing/Safety Details

Earthing	Each unit must be **permanently earthed** according to EN 50178. For permanent earthing, EN 50178 states that: *A cross-section conductor of at least 10mm² is required. This can be achieved either by using a single conductor (PE) or by laying a second conductor though separate terminals (PE2 where provided) and electrically in parallel.* Use a copper protective earth conductor of at least 10mm² minimum cross-section. These drives are fitted with four permanent earthing points. **Conductors must be sized in accordance with Local Wiring Regulations which always take precedence.** As a guide, refer to the Input Current for the drive given in the Electrical Ratings tables.
Input Supply Details **(TN) and (IT)**	Drives without filters are suitable for earth referenced (TN) or non-earth referenced (IT) supplies. External filters are available for use on earth referenced (TN) supplies only.
Earth Leakage Current	>>100mA (all models)

Cabling Requirements for EMC Compliance

	Power Supply Cable	Motor Cable	External AC Supply EMC Filter to Drive Cable	Brake Resistor Cable	Signal/Control Cable
Cable Type (for EMC Compliance)	Unscreened	Screened/ armoured	Screened/ armoured	Screened/ armoured	Screened
Screen to Earth Connection		Both ends	Both ends	Both ends	Drive end only
Segregation	From all other wiring (clean)	From all other wiring (noisy)			From all other wiring (sensitive)
890xx/x/… Length Limitations With External AC Supply EMC Filter	Unlimited	50 metres To achieve EN61800-3 Table 9 restricted distribution	0.3 metres	25 metres	25 metres
Length Limitations With Output Choke		300 metres maximum			
Length Limitations Without Output Choke		250 metres maximum			

External AC Supply (RFI) Filter (Part Number CO467843U340)

The drive can be supplied with filters to meet the 'industrial' Class A conducted emission limits of EN55011 when used with 50m of screened motor cable and the specified 3% minimum AC line choke as listed below.

Frame Size	Motor Power (kW)	Number of Filters Required in Parallel	Phase	Watt Loss (W)	Leakage Current (mA)	Current (A)	Maximum Supply Voltage (V)	EMC Performance Class (Industrial)	Maximum Motor Cable Length (m)	AC Line Choke
G	110	1	3	50	>100mA	340	460	Class A	50	CO389936U401
G	132	1	3	50	>100mA	340	460	Class A	50	CO389936U401
G	160	2	3	100	>100mA	340	460	Class A	50	CO389936U402
G	180	2	3	100	>100mA	340	460	Class A	50	CO389936U402
H	200	2	3	100	>100mA	340	460	Class A	50	CO389936U402
H	220	2	3	100	>100mA	340	460	Class A	50	CO389936U402
H	250	2	3	100	>100mA	340	460	Class A	50	CO389936U403
H	280	2	3	100	>100mA	340	460	Class A	50	CO389936U403
J	315	2	3	100	>100mA	340	460	Class A	50	CO389936U403

Filters suitable for earth referenced (TN) supplies only. The filter is suitable for use at 3kHz switching frequency only.

AC Line Choke

Frame G, H, J drives MUST use an AC Line Choke. However, where a drive is individually supplied from a dedicated transformer with the required impedance, the AC Line Choke is not required.
Where a system comprises a number of Frame G, H and J drives connected to a common supply, a separate AC Line Choke is required in the supply to each drive.
When an EMC external ac supply filter is used, the AC Line Choke must be fitted between the filter and the drive.

Caution

Failure to provide the correct line impedance will severely reduce the drives lifetime and could result in catastrophic failure of the drive.

The required AC Line Choke line impedance is nominally 3% of the drive rating.
Parker SSD Drives can supply the following ac line chokes:

Frame Size	Constant/Quadratic Torque Rating		Inductance/Phase	Maximum Continuous AC Line Current-Quadratic Torque	Peak Current @ 150% Constant Torque Rating	Parker SSD Drives Part No.
	kW @ 380V	Hp @ 460V	(μH)	(A rms)	(A peak)	
G	110/132		75	260	560	CO389936U401
		175/200		239	560	
	132/160			313	620	
		200/250		288	620	
	160/180		50	359	790	CO389936U402
		250/300		358	790	
	180/220			423	860	
		300/350		411	860	

AC Line Choke

Frame G, H, J drives MUST use an AC Line Choke. However, where a drive is individually supplied from a dedicated transformer with the required impedance, the AC Line Choke is not required.
Where a system comprises a number of Frame G, H and J drives connected to a common supply, a separate AC Line Choke is required in the supply to each drive.
When an EMC external ac supply filter is used, the AC Line Choke must be fitted between the filter and the drive.

Caution

Failure to provide the correct line impedance will severely reduce the drives lifetime and could result in catastrophic failure of the drive.

The required AC Line Choke line impedance is nominally 3% of the drive rating.
Parker SSD Drives can supply the following ac line chokes:

Frame Size	Constant/Quadratic Torque Rating		Inductance/Phase	Maximum Continuous AC Line Current-Quadratic Torque	Peak Current @ 150% Constant Torque Rating	Parker SSD Drives Part No.
	kW @ 380V	Hp @ 460V	(μH)	(A rms)	(A peak)	
H	200/250		50	474	915	CO389936U402
	220/250			474	995	
		350/400		461	995	
	250/300		35	574	1180	CO389936U403
		400/450		529	1180	
	280/315			601	1295	
		450/500		581	1295	
J	315/355			676	1430	
		500/550		636	1430	

Internal Dynamic Brake Switch (Frame G)

Motor Power (kW)	Brake Switch Peak Current (A)	Peak Brake Dissipation (kW/hp)	Brake Switch Continuous Current (A)	Continuous Brake Dissipation (kW/hp)	Minimum Brake Resistor Value (Ω)
380-460V ±10%, 45-65Hz DC link brake voltage: 750 - 820V					
	20s maximum, 30% duty				
180	360	270/360	72	54/72	2.08

Internal Dynamic Brake Switch (Frame H)

Motor Power (kW)	Brake Switch Peak Current (A)	Peak Brake Dissipation (kW/hp)	Brake Switch Continuous Current (A)	Continuous Brake Dissipation (kW/hp)	Minimum Brake Resistor Value (Ω)
380-460V ±10%, 45-65Hz DC link brake voltage: 750 - 820V					
	20s maximum, 30% duty				
280	560	420/560	112	84/112	1.34

Internal Dynamic Brake Switch (Frame J)

Motor Power (kW)	Brake Switch Peak Current (A)	Peak Brake Dissipation (kW/hp)	Brake Switch Continuous Current (A)	Continuous Brake Dissipation (kW/hp)	Minimum Brake Resistor Value (Ω)
380-460V ±10%, 45-65Hz DC link brake voltage: 750 - 820V					
	20s maximum, 30% duty				
315	630	473/630	126	95/126	1.19

Analog Inputs/Outputs

AIN1 - AIN4, AOUT1 - AOUT2

	Inputs	Outputs
Range	0-10V, ±10V, 0-20mA or 4-20mA (range set in software). Absolute maximum input voltage -15V to +30V	0-10V, ±10V (10mA maximum), (range set in software)
Impedance	Voltage range = 47kΩ Current range = 150Ω + series diode	Voltage range = 100Ω
Resolution	12 bit	12 bit
Sample Rate	5ms (one selected input can be 1ms)	5ms

Digital Inputs

DIN1 - DIN9. Conforming to IEC1131-2.

Nominal Rated Voltage	24V DC	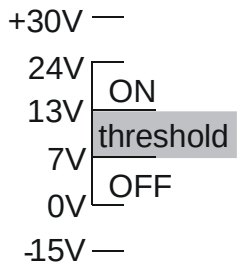
Absolute Maximum Input Voltage	-15V to +30V	
Input Threshold	9.0V ±2.5V	
Input Hysteresis	No	
Sample Rate	1ms	
Input Current	7.3mA ±10% @ 24V	

Digital Outputs

There are six digital outputs. Two are current sourcing outputs, DINOUT1 and DINOUT2. The third is a pair of volt-free relay contacts, DOUT3A and DOUT 3B.

DINOUT1, DINOUT2	
Output High Voltage	≥18V, ≤26V On state, output current = 0 to maximum output current
Maximum Output Current	≥160mA Note: The maximum output is the sum of all 24V sourced outputs, i.e. $i_{DINOUT1} + i_{DINOUT2} + i_{24V\ USER} \leq 160mA$
Overload/Short Circuit Protection	Indefinite

DOUT3A, DOUT3B	
Rated Voltage	24V DC SELV
Rated Current	1A resistive load at rated voltage
Resistance	≤0.05Ω - on state
Isolation Resistance	$>10^{10}\Omega$ - off state
Arc Protection	No
Update Rate	1 ms

Relay Outputs

There are three pairs of volt-free relay outputs available on Terminal X16. Rated to 230V 3A resistive load. Alternatively they may be used down to 1mA, 12V levels.

DOUT4, DOUT5, DOUT6	
DOUT4_A DOUT4_B	Normally-open relay contacts. Default function DOUT4 closed = healthy
DOUT5_A DOUT5_B	Normally-open relay contacts. Default function DOUT5 closed = running
DOUT6_A DOUT6_B	Normally-open relay contacts. No default function.

Reference Outputs

There are two reference outputs that provide +10V and -10V. They can be used, for example, to generate -10V to +10V signals via potentiometers for the analog inputs.

Accuracy	±1% Output current = 0 to maximum. Ambient temperature = 0°C to 70°C.
Maximum Output Current	≥10mA
Overload/Short Circuit Protection	Indefinite

User 24V Supply

A supply is provided for powering external equipment or for providing power to the digital inputs.

Terminal X14/03	
Output Voltage	≥18V, ≤28V
Maximum Output Current	≥160mA Note: The maximum output is the sum of all 24V sourced outputs, i.e. $i_{DINOUT1} + i_{DINOUT2} + i_{24V\ USER} \leq 160mA$
Overload/Short Circuit Protection	Indefinite

Auxiliary Power Supply Load Requirements

This tables lists the auxiliary power supply requirements for the 890 ancillary equipment.

Item	Load Requirements	Item	Load Requirements
Tech Cards - Speed Feedback			
8902/EQ : HTTL Encoder	8W	8902/RE : Resolver	3.2W
8902/E1 : Sin/Cos Encoder	3.3W		
Tech Cards - Communications			
8903/DN : DeviceNet	1.3W	8903/IP : Ethernet/IP	1.6W
8903/PB : Profibus	2.3W	8903/M1 : Mark Registration	1W from +5V supply, plus up to 3W from +24V supply when an encoder is connected
8903/CN : ControlNet	1.3W	8903/PN : Profinet	1.6W
8903/CB : CANOpen	1.3W	8903/FA : Firewire 1394A	0.7W
8903/IM : Modbus/TCP	1.6W	8903/FB : Firewire 1394B	2W
8903/CT : EtherCAT	1.8W	8903/RS : RS485	1W
Keypad			
6901 Keypad	1W	6911 Keypad	1W

Wire Sizes (Europe)

Wire sizes for Europe should be chosen with respect to the operating conditions and your local National Electrical Safety Installation Requirements. Local wiring regulations always take precedence.

Fan Terminals (mm^2/AWG)	Motor Thermistor (mm^2/AWG)	DC Output Busbar (mm)	AC Input/Output Busbar (mm)	Brake Busbar (mm)	Control Terminals (mm^2/AWG)
0.2 - 6/24 -10	0.5 - 16/20 - 6	2 x Ø13 holes, 35mm apart	2 x Ø13 holes, 44mm apart	2 x Ø13 holes, 44mm apart	2.5/14

Wire Sizes (US/Canada)

North American wire sizes (AWG) are based on NEC/NFPA-70 for ampacities of thermoplastic-insulated (75ºC) copper conductors assuming not more than three current-carrying conductors in raceway or cable, based on ambient temperature of 30ºC. The wire sizes allow for an ampacity of 125% of the rated input and output amperes for motor branch-circuit conductors as specified in NEC/NFPA-70.

FRAME G : 460V ±10%			
CONSTANT TORQUE			
Model Number	**Power Input Kcmil**	**Power Output Kcmil**	**Brake Output AWG**
890SD/4/0216G/..	250	300	6
890SD/4/0250G/..	350	400	4
890SD/4/0316G/..	600	600	4
890SD/4/0361G/..	700	700	3
QUADRATIC TORQUE			
Model Number	**Power Input Kcmil**	**Power Output Kcmil**	**Brake Output**
890SD/4/0216G/..	350	400	
890SD/4/0250G/..	500	500	
890SD/4/0316G/..	700	700	
890SD/4/0361G/..	900	900	

Wire Sizes (US/Canada)

North American wire sizes (AWG) are based on NEC/NFPA-70 for ampacities of thermoplastic-insulated (75ºC) copper conductors assuming not more than three current-carrying conductors in raceway or cable, based on ambient temperature of 30ºC. The wire sizes allow for an ampacity of 125% of the rated input and output amperes for motor branch-circuit conductors as specified in NEC/NFPA-70.

FRAME H : 460V ±10%			
CONSTANT TORQUE			
Model Number	**Power Input Kcmil**	**Power Output Kcmil**	**Brake Output AWG**
890SD/4/0375H/..	700	750	3
890SD/4/0420H/..	900	1000	2
890SD/4/0480H/..	1500	1500	1
890SD/4/0520H/..	2000	1750	1/0
QUADRATIC TORQUE			
Model Number	**Power Input Kcmil**	**Power Output Kcmil**	**Brake Output**
890SD/4/0375H/..	1250Kcmil	1500 Kcmil	
890SD/4/0420H/..	1250 Kcmil	1500 Kcmil	
890SD/4/0480H/..	2000 Kcmil	1@3"	
890SD/4/0520H/..	1@3"	1@3"	

Wire Sizes (US/Canada)

North American wire sizes (AWG) are based on NEC/NFPA-70 for ampacities of thermoplastic-insulated (75ºC) copper conductors assuming not more than three current-carrying conductors in raceway or cable, based on ambient temperature of 30ºC. The wire sizes allow for an ampacity of 125% of the rated input and output amperes for motor branch-circuit conductors as specified in NEC/NFPA-70.

FRAME J : 460V ±10%			
CONSTANT TORQUE			
Model Number	**Power Input Kcmil**	**Power Output Kcmil**	**Brake Output AWG**
890SD/4/0590J/..	1@3"	1@3"	2/0
CONSTANT TORQUE			
Model Number	**Power Input Kcmil**	**Power Output Kcmil**	**Brake Output AWG**
890SD/4/0590J/..	1@3"	1@3"	

UL Terminations

UL compression Terminal Lug Kits are available for the drives which provide sets of lugs suitable for the following ratings. These lugs must be applied with the correct tooling as described in the Installation Instructions provided with each Lug Kit.

The following Terminal Kits are available for the connection of Power Wiring.

Model Number	Constant Torque	Quadratic Torque	Terminal Kit No.
FRAME G			
890SD/4/0216G/..	150HP	200HP	LA465682U001
890SD/4/0250G/..	200HP	250HP	LA465682U002
890SD/4/0316G/..	250HP	300HP	LA465682U003
890SD/4/0361G/..	300HP	350HP	LA465682U004
FRAME H			
890SD/4/0375H/..	300HP	400HP	LA465682U005
890SD/4/0420H/..	350HP	400HP	LA465682U006
890SD/4/0480H/..	400HP	450HP	LA465682U007
890SD/4/0520H/..	450HP	500HP	LA465682U008
FRAME J			
890SD/4/0590J/..	500HP	550HP	LA465682U009

890SD Branch Protection Fuses (North America)

It is recommended that UL Listed (JDDZ) non-renewable cartridge fuses, Class K5 or H; or UL Listed (JDRX) renewable cartridge fuse, Class H, are installed upstream of the drive.

Short circuit protection Semiconductor Fuses should be installed in the 3-phase supply to the drive module to protect the input bridge. Circuit breakers or HRC fuses will not protect the input bridge.

Model Number	Input Fuse Rating (A)	
	Constant Torque	Quadratic Torque
Frame G		
890SD/4/0216G/..	250	300
890SD/4/0250G/..	300	350
890SD/4/0316G/..	350	450
890SD/4/0361G/..	400	450
Frame H		
890SD/4/0375H/..	450	550
890SD/4/0420H/..	450	550
890SD/4/0480H/..	550	650
890SD/4/0520H/..	600	650
Frame J		
890SD/4/0590J/..	600	650

890 Control Board Firmware and Hardware Compatibility

Which Firmware for Which Hardware

Firmware Version	Application				
V1.x	Induction Motor Control	AFE Control	**No** Motion Control		
V2.x			Motion Control	PMAC Servo Motor Control	PMAC Torque Motor Control
V3.x	Induction Motor Control	AFE Control	**No** Motion Control	PMAC Servo Motor Control	PMAC Torque Motor Control

Which Firmware for Which Hardware

Old Control Card Hardware Board. # 465820		
	New Control Card Hardware. # 469910	
Firmware for Old Control Card	**Bridging Releases (Firmware executes on both cards)**	**Firmware for New Control Card**
V1.1 to V1.9	V1.10 onwards	-
V2.1 to V2.3	V2.4 onwards	-
-	-	V3.1 onwards

DSE Configuration Compatibility

All versions of 890 control board firmware are supported by V2.10 (or newer) DSE or DSELite.

Parker Hannifin Ltd., Automation Group, SSD Drives Europe
New Courtwick Lane, Littlehampton, West Sussex BN17 7RZ
Tel: +44 (0)1903 737000 Fax: +44 (0)1903 737100

CANADA
Parker Hannifin Canada
Motion and Control Division
160 Chisholm Drive
Milton, Ontario L9T 3G9
Tel:+1 (905) 693-3000
Fax:+1 (905) 876-1958

CHINA
Parker Hannifin Motion & Control
(Shanghai) Co. Ltd.
280 Yunqiao Road,
JinQiao Export Processing Zone,
Pudong District, Shanghai 201206
Tel: +86(21)5031 2525
Fax: +86(21)5854 7599

FRANCE
Parker SSD Parvex
8 Avenue du Lac
B.P. 249
21007 Dijon Cedex
Tel:+33 (0)3 80 42 41 40
Fax:+33 (0)3 80 42 41 23

GERMANY
Parker Hannifin GmbH
Von-Humboldt-Strasse 10
64646 Heppenheim
Tel:+49 (6252) 798200
Fax:+49 (6252) 798205

ITALY
Parker Hannifin SPA
Via c. Gounod, Cinisello Balsamo
1-200092, Milano
Tel: +39 (0236) 1081
Fax: +39 (0236) 108400

USA
Parker Hannifin Corporation
SSD Drives
9225 Forsyth Park Drive
Charlotte
North Carolina 28273
Tel: +1 (704) 588 3246
Fax: +1 (704) 588 3249

05/03/09

SERVICE & REPAIR CENTRES

Local availability and service support also in:

Argentina • Australia • Austria • Bangladesh • Belgium • Brazil • Chile • Colombia • Costa Rica • Cyprus Czech Republic • Denmark • Ecuador • Egypt • Finland • Greece • Hong Kong • Hungary • India • Indonesia Iran • Ireland • Israel • Japan • Jordan • Kenya • Korea • Kuwait • Lithuania • Malaysia • Netherlands New Zealand • Nigeria • Norway • Peru • Philippines • Poland • Portugal • Quatar • Romania • Russia Saudi Arabia • Singapore • Slovenia • Slovakia • South Africa • Spain • Sri Lanka • Sweden • Switzerland Taiwan • Thailand • Turkey • United Arab Emirates • Vietnam • Zimbabwe

www.ssddrives.com

HA471397U003-06