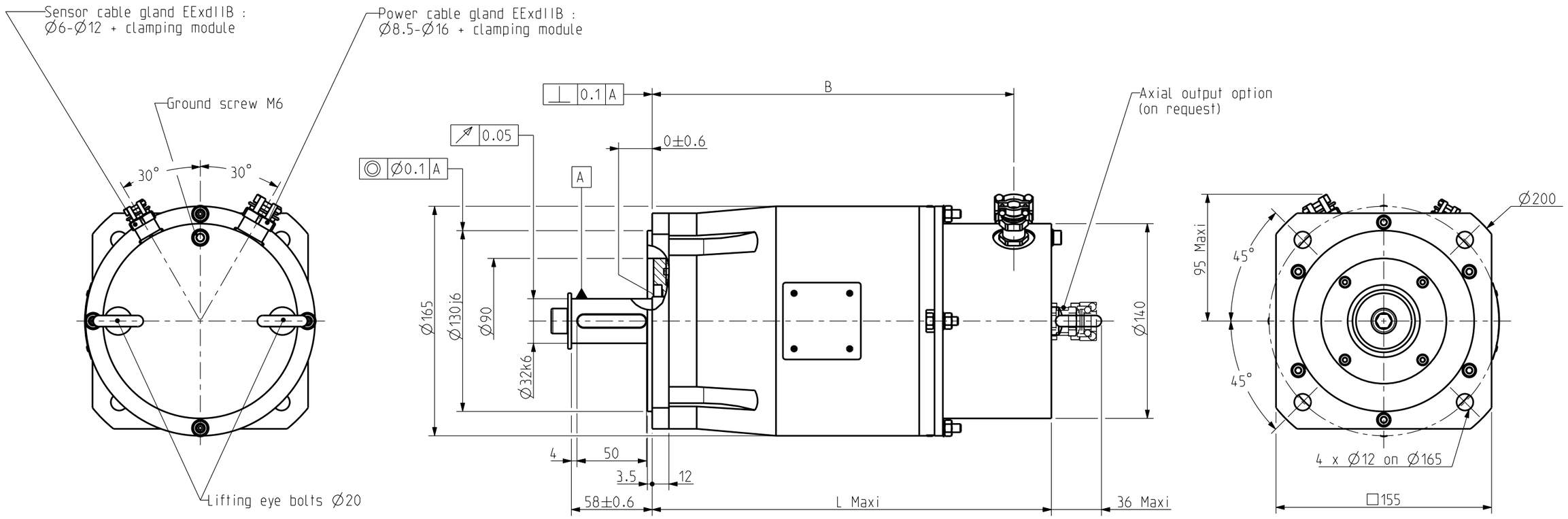

U : Phase U

V : Phase V

W : Phase W

TH- : Thermic protector

TH+ : Thermic protector

BR- : No connection

BR+ : No connection

S1 : Resolver 1

S2 : Resolver 2

S3 : Resolver 3

S4 : Resolver 4

R1 : Resolver 5

R2 : Resolver 6

B : Shield option (screw M4)

⏚ : Ground

PRINTED CIRCUIT (under the cap)

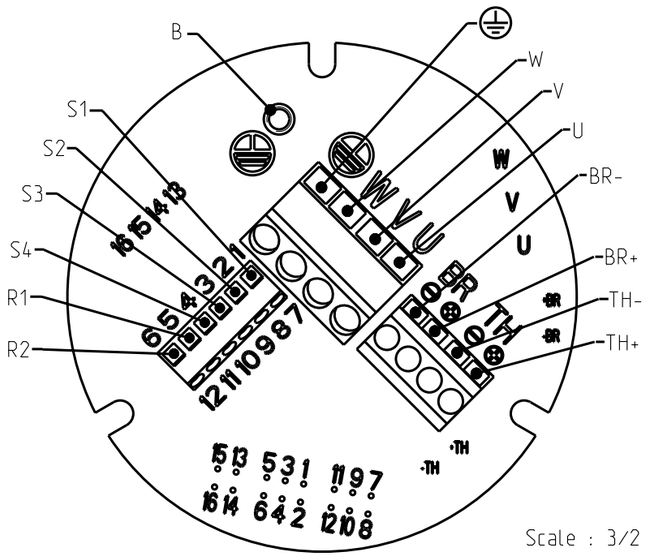

Scale : 3/2

Protection II 2 G EEx d II B T4 :

* EN 50014 : GENERAL RULES
* EN 50018 : FLAMEPROOF "d"

Certification : INERIS 05ATEX0061X

DIMENSIONS

	EX820	EX840	EX860
L Maxi	290	350	410
B	260	320	380

SHAFT END

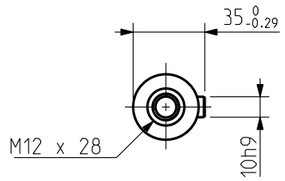

Drawing valid for : -

Weight :

This document is the property of PARVEX.Transmission as well as reproduction or copy is not permitted without written authorisation.

Drawn	18/05/05	SP	Visa	
Modifications a	AM 22090 12/09/05 SP			

Scale 1:3

Parker
SSD Parvex
8 Avenue du lac. BP249
21007-DIJON cedex-FRANCE
www.parvex.com

EX800

OUTLINE DRAWING

Format	F	E	S	G	I
A3	x	x			

344664AE1201 a