MITSUBISHI ELECTRIC

INVERTER

FR-E800
Instruction Manual (Connection)
(200V / 400V CLASS)

Compact, high functionality inverters

FR-E820-0008(0.1K) to 0900(22K)
FR-E840-0016(0.4K) to 0440(22K)
FR-E820S-0008(0.1K) to 0110(2.2K)
FR-E820-0008(0.1K) to 0900(22K)E
FR-E840-0016(0.4K) to 0440(22K)E
FR-E820S-0008(0.1K) to 0110(2.2K)E
FR-E820-0008(0.1K) to 0900(22K)SCE
FR-E840-0016(0.4K) to 0440(22K)SCE
FR-E820S-0008(0.1K) to 0110(2.2K)SCE

Safety Instructions 4

Chapter 1 Introduction 12

1.1 Product checking and accessories 13

1.2 Component names 15

1.3 Operation steps 18

1.4 Related manuals 20

Chapter 2 Installation and Wiring 22

2.1 Peripheral devices 22

2.1.1 Inverter and peripheral devices 22
2.1.2 Peripheral devices 25

2.2 Removal and reinstallation of the front cover 27

2.3 Installation of the inverter and enclosure design 33

2.3.1 Inverter installation environment 33
2.3.2 Amount of heat generated by the inverter 35
2.3.3 Output current reduction when the surrounding air temperature is between 50°C and 60°C 36
2.3.4 Standby power consumption by the inverter 37
2.3.5 Cooling system types for inverter enclosure 37
2.3.6 Inverter installation 38

2.4 Terminal connection diagrams 41

2.5 Main circuit terminals 51

2.5.1 Details on the main circuit terminals 51
2.5.2 Main circuit terminal layout and wiring to power supply and motor 51
2.5.3 Applicable cables and wiring length 54
2.5.4 Earthing (grounding) precautions 58

2.6 Control circuit 60

2.6.1 Details on the control circuit terminals (Standard model) 60
2.6.2 Details on the control circuit terminals (Ethernet model) 63
2.6.3 Details on the control circuit terminals (Safety communication model) 65
2.6.4 Control logic (sink/source) change (Standard model / Ethernet model) 67
2.6.5 Wiring of control circuit 69
2.6.6 Wiring precautions 73
2.6.7 Safety stop function (Standard model / Ethernet model) 74
2.6.8 Safety communication function (Safety communication model) 75

2.7 Connection to a motor with encoder (Vector control) 78

2.8 Communication connectors and terminals 85

2.8.1 PU connector (Standard model) 85
2.8.2 Ethernet connector (Ethernet model / Safety communication model) 86

2.8.3 USB connector 88

2.9 Connection of stand-alone option units 89

2.9.1 Connection of the brake resistor (FR-E820-0030(0.4K) or higher, FR-E840-0016(0.4K) or higher, and FR-E820S-0030(0.4K) or higher). 89
2.9.2 Connection of the brake unit (FR-BU2). 93
2.9.3 Connection of the high power factor converter (FR-HC2) (Standard model / Ethernet model). 94
2.9.4 Connection of the multifunction regeneration converter (FR-XC) (Standard model / Ethernet model). 95
2.9.5 Connection of the power regeneration common converter (FR-CV) (Standard model / Ethernet model). 96
2.9.6 Connection of the DC reactor (FR-HEL). 97

Chapter 3 Precautions for Use of the Inverter 100

3.1 Electro-magnetic interference (EMI) and leakage currents 100

3.1.1 Leakage currents and countermeasures. 100
3.1.2 Techniques and measures for electromagnetic compatibility (EMC) 102

3.2 Power supply harmonics 105

3.2.1 Power supply harmonics. 105
3.2.2 Harmonic suppression guidelines in Japan. 105

3.3 Installation of a reactor 109

3.4 Power shutdown and magnetic contactor (MC) 110

3.5 Countermeasures against deterioration of the 400 V class motor insulation 112

3.6 Checklist before starting operation. 113

3.7 Failsafe system which uses the inverter. 116

Chapter 4 Specifications 120

4.1 Inverter rating 120

4.2 Motor rating 123

4.2.1 Mitsubishi Electric high-performance energy-saving motor with encoder SF-PR-SC. 123
4.2.2 Mitsubishi Electric Vector control dedicated motor SF-V5RU. 125
4.2.3 PM motor MM-GKR. 127
4.2.4 PM motor EM-A. 131

4.3 Common specifications 134

4.4 Outline dimension drawings 136

4.4.1 Inverter outline dimension drawings (Standard model). 136
4.4.2 Inverter outline dimension drawings (Ethernet model / Safety communication model). 144
4.4.3 Dedicated motor outline dimension drawings 152

Chapter 5 Appendix 166

5.1 How to check specification changes 166

5.1.1 Details of specification changes 166

CONTENTS

Safety Instructions

Thank you for choosing Mitsubishi Electric inverter.
This Instruction Manual provides detailed instructions for advanced settings of the FR-E800 series inverters.
Incorrect handling might cause an unexpected fault. Before using this product, read this Instruction Manual and the document enclosed with the product carefully to ensure proper use.
Do not attempt to install, operate, maintain or inspect this product until you have read the Instruction Manuals and appended documents carefully. Do not use this product until you have a full knowledge of this product mechanism, safety information and instructions.
Installation, operation, maintenance and inspection must be performed by qualified personnel. Here, qualified personnel means a person who meets all the following conditions:

- A person who possesses a certification in regard with electric appliance handling, or person took a proper engineering training. Such training may be available at your local Mitsubishi Electric office. Contact your local sales office for schedules and locations.
- A person who can access operating manuals for the protective devices (for example, light curtain) connected to the safety control system, or a person who has read these manuals thoroughly and familiarized themselves with the protective devices.

In this Instruction Manual, the safety instruction levels are classified into "WARNING" and "CAUTION".

⚠WARNING	**Incorrect handling may cause hazardous conditions, resulting in death or severe injury.**
⚠CAUTION	**Incorrect handling may cause hazardous conditions, resulting in medium or slight injury, or may cause only material damage.**

Note that even the ⚠ **CAUTION** level may lead to a serious consequence depending on conditions. Be sure to follow the instructions of both levels as they are critical to personnel safety.

◆Electric shock prevention

⚠WARNING

- Do not remove the front cover or the wiring cover while the power of this product is ON, and do not run this product with the front cover or the wiring cover removed as the exposed high voltage terminals or the charging part of the circuitry can be touched. Otherwise you may get an electric shock.
- Even if power is OFF, do not remove the front cover except for wiring or periodic inspection as the inside of this product is charged. Otherwise you may get an electric shock.
- Before wiring or inspection, check that the LED display of the operation panel is OFF. Any person who is involved in wiring or inspection shall wait for 10 minutes or longer after the power supply has been cut off, and check that there are no residual voltage using a digital multimeter or the like. The capacitor is charged with high voltage for some time after power OFF, and it is dangerous.
- This product must be earthed (grounded). Earthing (grounding) must conform to the requirements of national and local safety regulations and electrical code (NEC section 250, IEC 61140 class 1 and other applicable standards). A neutral-point earthed (grounded) power supply must be used for 400 V class of this product to be compliant with EN standard.
- Any person who is involved in wiring or inspection of this product shall be fully competent to do the work.
- This product body must be installed before wiring. Otherwise you may get an electric shock or be injured.
- Do not touch the setting dial or keys with wet hands. Doing so may cause an electric shock.
- Do not subject the cables to scratches, excessive stress, heavy loads or pinching. Doing so may cause an electric shock.
- Do not change the cooling fan while power is ON as it is dangerous.
- Do not touch the printed circuit board or handle the cables with wet hands. Doing so may cause an electric shock.
- Never touch the motor terminals, etc. right after powering OFF as the DC voltage is applied to the motor for 1 second at powering OFF if the main circuit capacitor capacity is measured. Doing so may cause an electric shock.
- Before wiring or inspection for a PM motor, confirm that the PM motor is stopped as a PM motor is a synchronous motor with high-performance magnets embedded inside and high-voltage is generated at the motor terminals while the motor is running even after the power of this product is turned OFF. In an application, such as fan and blower, that the motor may be driven by the load, connect a low-voltage manual contactor at the output side of this product and keep it open during wiring and inspection of this product. Otherwise you may get an electric shock.

◆Fire prevention

⚠CAUTION

- This product must be installed on a nonflammable wall without holes in it so that its components cannot be touched from behind. Installing it on or near flammable material may cause a fire.
- If this product becomes faulty, the product power must be switched OFF. A continuous flow of large current may cause a fire.
- When using a brake resistor, a sequence that will turn OFF power when a fault signal is output must be configured. Otherwise the brake resistor may excessively overheat due to damage of the brake transistor and such, causing a fire.
- Do not connect a resistor directly to the DC terminals P/+ and N/-. Doing so could cause a fire.
- Across terminals P/+ and PR, connect only an external brake resistor.
- Be sure to perform daily and periodic inspections as specified in the Instruction Manual (Maintenance). There is a possibility of explosion, damage, or fire if this product is used without inspection.

◆Injury prevention

⚠CAUTION

- The voltage applied to each terminal must be as specified in the Instruction Manual. Otherwise an explosion or damage may occur.
- The cables must be connected to the correct terminals. Otherwise an explosion or damage may occur.
- The polarity (+ and -) must be correct. Otherwise an explosion or damage may occur.
- While power is ON or for some time after power-OFF, do not touch this product as it will be extremely hot. Doing so may cause burns.

◆Additional instructions

The following instructions must be also followed. If the product is handled incorrectly, it may cause unexpected fault, an injury, or an electric shock.

⚠ CAUTION

Transportation and installation

- To prevent injury, wear cut-resistant gloves when opening packaging with sharp tools.
- Use proper lifting techniques or a trolley when carrying products. Failure to do so may lead to injuries.
- Do not stand or place any heavy object on this product.
- Do not stack the boxes containing this product higher than the number recommended.
- When carrying this product, do not hold it by the front cover or the setting dial. It may fall or break.
- During installation, caution must be taken not to drop this product as doing so may cause injuries.
- The product must be installed on a surface that withstands the weight of the product.
- Do not install the product on a hot surface.
- Ensure the mounting orientation of this product is correct.
- Ensure this product is mounted securely with screws in its enclosure.
- Do not install or operate this product if it is damaged or has parts missing.
- Foreign conductive objects must be prevented from entering this product. That includes screws and metal fragments or other flammable substance such as oil.
- As this product is a precision instrument, do not drop or subject it to impact.
- The surrounding air temperature must be between -20°C and +60°C (non-freezing). The rated current must be reduced at a surrounding air temperature above 50°C. Otherwise this product may be damaged.
- The ambient humidity must be 90% RH or less (non-condensing) for models without circuit board coating and 95% RH or less (non-condensing) for models with circuit board coating. Otherwise this product may be damaged.
- The temporary storage temperature (applicable to a short limited time such as a transportation time) must be between -40°C and +70°C. Otherwise this product may be damaged.
- This product must be used indoors (without corrosive gas, flammable gas, oil mist, dust and dirt). Otherwise this product may be damaged.
- Do not use this product at an altitude above 3000 m. Vibration should not exceed 5.9 m/s^2 at 10 to 55 Hz in X, Y, and Z directions. Otherwise this product may be damaged. (Refer to page 33 for details.)
- If halogens (including fluorine, chlorine, bromine, and iodine) contained in fumigants for wood packages enter this product, the product may be damaged. Prevent the entry of fumigant residuals or use an alternative method such as heat disinfection. Note that sterilization or disinfection of wood packages should be performed before packing the product.

Wiring

- Do not install a power factor correction capacitor, surge absorber, or radio noise filter on the output side of this product. These devices may overheat or burn out.
- The output terminals (terminals U, V, and W) must be connected to a motor correctly. Otherwise the motor will rotate inversely.
- Even with the power OFF, high voltage is still applied to the terminals U, V and W while the PM motor is running. Ensure the PM motor has stopped before carrying out any wiring. Otherwise you may get an electric shock.
- Never connect a PM motor to a commercial power supply. Connecting a commercial power supply to the input terminals (U, V, W) of a PM motor will burn it out. The PM motor must be applied a power from the inverter with the output terminals (U, V, W).

Test operation

- Before starting the operation, confirm or adjust the parameter settings. Failure to do so may cause some machines to make unexpected motions.

⚠ WARNING

Usage

- Stay away from the equipment after using the retry function in this product as the equipment will restart suddenly after the output shutoff of this product.
- Access to the motor is allowed only after it is fully confirmed that the motor does not start running.
- Depending on the function settings of this product, the product does not stop its output even when the STOP/RESET key on the operation panel is pressed. To prepare for it, provide a separate circuit and switch (to turn OFF the power of this product, or apply a mechanical brake, etc.) for an emergency stop.
- Be sure to turn OFF the start (STF/STR) signal before clearing the fault as this product will restart the motor suddenly after a fault is cleared.
- Do not use a PM motor for an application that the motor may be driven by the load and run at a speed higher than the maximum motor speed.
- Use only a three-phase induction motor or PM motor as a load on this product. Connection of any other electrical equipment to the output of this product may damage the equipment.
- Performing pre-excitation (LX signal and X13 signal) under torque control may start the motor running at a low speed even when the start signal (STF or STR) is not input. This product with the start command ON may also rotate the motor at a low speed when the speed limit value is set to zero. Confirm that the motor running does not cause any safety problems before performing pre-excitation.
- Do not modify this product.
- Do not remove any part which is not instructed to be removed in the Instruction Manuals. Doing so may lead to a failure or damage of this product.

⚠ CAUTION

Usage

- When installing the MC on the output side of the inverter, turn it ON/OFF while both the inverter and motor are at a stop.
- The electronic thermal O/L relay function may not be enough for protection of a motor from overheating. It is recommended to install an external thermal relay or a PTC thermistor for overheat protection.
- Do not repeatedly start or stop this product with a magnetic contactor on its input side. Doing so may shorten the life of this product.
- Use a noise filter or other means to minimize electromagnetic interference with other electronic equipment used nearby this product.
- Appropriate precautions must be taken to suppress harmonics. Otherwise harmonics in power systems generated from this product may heat/damage a power factor correction capacitor or a generator.
- To drive a 400 V class motor with this product, use an insulation-enhanced motor, or take measures to suppress surge voltage. Otherwise surge voltage, which is attributed to the length and thickness of wire, may occur at the motor terminals, causing the motor insulation to deteriorate.
- When a motor is driven by the inverter, axial voltage is generated on the motor shaft, which may cause electrical corrosion of the bearing. Take measures such as decreasing the carrier frequency.
- As all parameters return to their initial values after the Parameter clear or All parameter clear is performed, the needed parameters for this product operation must be set again before the operation is started.
- This product can be easily set for high-speed operation. Therefore, consider all things related to the operation such as the performance of a motor and equipment in a system before the setting change.
- This product's brake function cannot be used as a mechanical brake. Use a separate device instead.
- When performing an inverter operation with frequent starts/stops, rise/fall in the temperature of the transistor element of the inverter will repeat due to a repeated flow of large current, shortening the life.
- Perform an inspection and test operation of this product if it has been stored for a long period of time.
- To avoid damage to this product due to static electricity, static electricity in your body must be discharged before you touch this product.
- Only one PM motor can be connected to a single unit of this product.
- A PM motor must be used under PM sensorless vector control. Do not use a synchronous motor, induction motor, or synchronous induction motor.
- Do not connect a PM motor to this product with it set to the induction motor control setting (initial setting). Do not connect an induction motor to this product with it set to the PM sensorless vector control setting. Doing so will cause failure.
- As a process of starting a PM motor, turn ON the power of this product first, and then close the contactor on the output side of this product.
- To maintain the security (confidentiality, integrity, and availability) of the inverter and the system against unauthorized access, DoS[*1] attacks, computer viruses, and other cyberattacks from external devices via network, take appropriate measures such as firewalls, virtual private networks (VPNs), and antivirus solutions. We shall have no responsibility or liability for any problems involving inverter trouble and system trouble by DoS attacks, unauthorized access, computer viruses, and other cyberattacks.
- Depending on the network environment, the inverter may not operate as intended due to delays or disconnection in communication. Carefully consider what type of environment the inverter will be used in and any safety issues related to its use.
- When the emergency drive function is enabled, the operation is continued or the retry operation (automatic reset and restart) is repeated even if a fault occurs, which may damage or burn this product and the motor. Before restarting the normal operation after the operation using the emergency drive function, make sure that this product and the motor have no fault.

*1 DoS: A denial-of-service (DoS) attack disrupts services by overloading systems or exploiting vulnerabilities, resulting in a denial-of-service (DoS) state.

⚠CAUTION

Emergency stop

- A safety backup such as an emergency brake must be provided for devices or equipment in a system to prevent hazardous conditions in case of failure of this product or an external device controlling this product.
- If the breaker installed on the input side of this product trips, check for wiring faults (such as short circuits) and damage to internal parts of this product. Identify and remove the cause of the trip before resetting the tripped breaker (or before applying the power to this product again).
- When any protective function is activated, take an appropriate corrective action before resetting this product to resume the operation.

Maintenance, inspection and parts replacement

- Do not carry out a megger (insulation resistance) test on the control circuit of this product. Doing so will cause failure.

Disposal

- This product must be treated as industrial waste.

◆Compliance with the EU Machinery Directive—Safety functions

To achieve functional safety, any work on the product such as wiring and inspections must be performed according to this document and the FR-E800-SCE Instruction Manual (Functional Safety) by technicians who took a safety standard training.

⚠WARNING

- Any misuse of safety functions may cause physical injury, damage to property, or economic loss. To confirm that the system is compliant with safety standards, a risk assessment must be conducted for the entire system. We shall not be liable for the compliance of the system with safety standards.
- To avoid an electric shock hazard, verify that the voltage on the bus capacitors has discharged before working on the inverter. Measure the DC bus voltage between terminals P/+ and N/- or other measurement points to verify zero voltage. (For the measurement points and the capacitor discharge time, refer to the FR-E800 Instruction Manual (Maintenance).)
- When the power supply to the gate drive circuit is shut off by a safety function, the inverter and the motor are not insulated each other. To avoid an electric shock hazard, verify that the voltage on the bus capacitors has discharged before wiring or inspection of the motor. Measure the DC bus voltage between terminals P/+ and N/- or other measurement points to verify zero voltage. (For the measurement points and the capacitor discharge time, refer to the FR-E800 Instruction Manual (Maintenance).)

⚠CAUTION

- We shall not be liable for the compliance or non-compliance with any local, national, or international codes or regulations for the installation of this product.
- Installation not compliant with applicable codes or directives may cause physical injury or damage to property.

General instruction

- For clarity, illustrations in this Instruction Manual may be drawn with covers or safety guards removed. Ensure all covers and safety guards are properly installed prior to starting operation. For details on the PM motor, refer to the Instruction Manual of the PM motor.

CHAPTER 1 Introduction

1.1 Product checking and accessories 13
1.2 Component names 15
1.3 Operation steps 18
1.4 Related manuals 20

1 Introduction

The contents described in this chapter must be read before using this product.
Always read the instructions before use.

◆ Abbreviations

Item	Description
PU	Operation panel, parameter unit (FR-PU07), LCD operation panel (FR-LU08), and enclosure surface operation panel (FR-PA07)
Parameter unit	Parameter unit (FR-PU07), LCD operation panel (FR-LU08), and enclosure surface operation panel (FR-PA07)
Inverter	Mitsubishi Electric inverter FR-E800 series
E800	Standard model (RS-485 + SIL2/PLd functional safety)
E800-E	Ethernet model (Ethernet + SIL2/PLd functional safety)
E800-SCE	Safety communication model (Ethernet + SIL3/PLe functional safety)
FM type inverter	Standard model with terminal FM (pulse output)
AM type inverter	Standard model with terminal AM (voltage output)
Vector control compatible option	FR-A8AP E kit
Pr.	Parameter number (Number assigned to function)
PU operation	Operation using the PU (operation panel / parameter unit)
External operation	Operation using the control circuit signals
Combined operation	Combined operation using the PU (operation panel / parameter unit) and External operation
Mitsubishi Electric standard efficiency motor	SF-JR
Mitsubishi Electric constant-torque motor	SF-HRCA
Mitsubishi Electric high-performance energy-saving motor	SF-PR
Mitsubishi Electric high-performance energy-saving motor with encoder	SF-PR-SC
Mitsubishi Electric Vector control dedicated motor	SF-V5RU
Mitsubishi Electric geared motor	GM-[]
Mitsubishi Electric inverter-driven geared motor for encoder feedback control	GM-DZ, GM-DP
Mitsubishi Electric PM motor	MM-GKR, EM-A

◆ Trademarks

- EtherCAT® is registered trademark and patented technology, licensed by Beckhoff Automation GmbH, Germany.
- MODBUS is a registered trademark of SCHNEIDER ELECTRIC USA, INC.
- BACnet is a registered trademark of the American Society of Heating, Refrigerating and Air-Conditioning Engineers (ASHRAE).
- DeviceNet and EtherNet/IP are registered trademarks of ODVA (Open DeviceNet Vendor Association, INC).
- PROFIBUS and PROFINET are either trademarks or registered trademarks of PROFIBUS & PROFINET International.
- CC-Link IE TSN and CC-Link IE Field Network Basic are registered trademarks of CC-Link Partner Association.
- Other company and product names herein are the trademarks and registered trademarks of their respective owners.

◆ Notes on descriptions in this Instruction Manual

- Connection diagrams in this Instruction Manual appear with the control logic of the input terminals as sink logic, unless otherwise specified. (For the control logic, refer to page 67.)

◆ Harmonic Suppression Guidelines

All the models of the inverters used by specific consumers are covered by "the Harmonic Suppression Guidelines for Consumers Who Receive High Voltage or Special High Voltage". (For details, refer to page 105.)

1.1 Product checking and accessories

Unpack the product and check the rating plate and the capacity plate of the inverter to ensure that the model agrees with the order and the product is intact.

◆ Inverter model

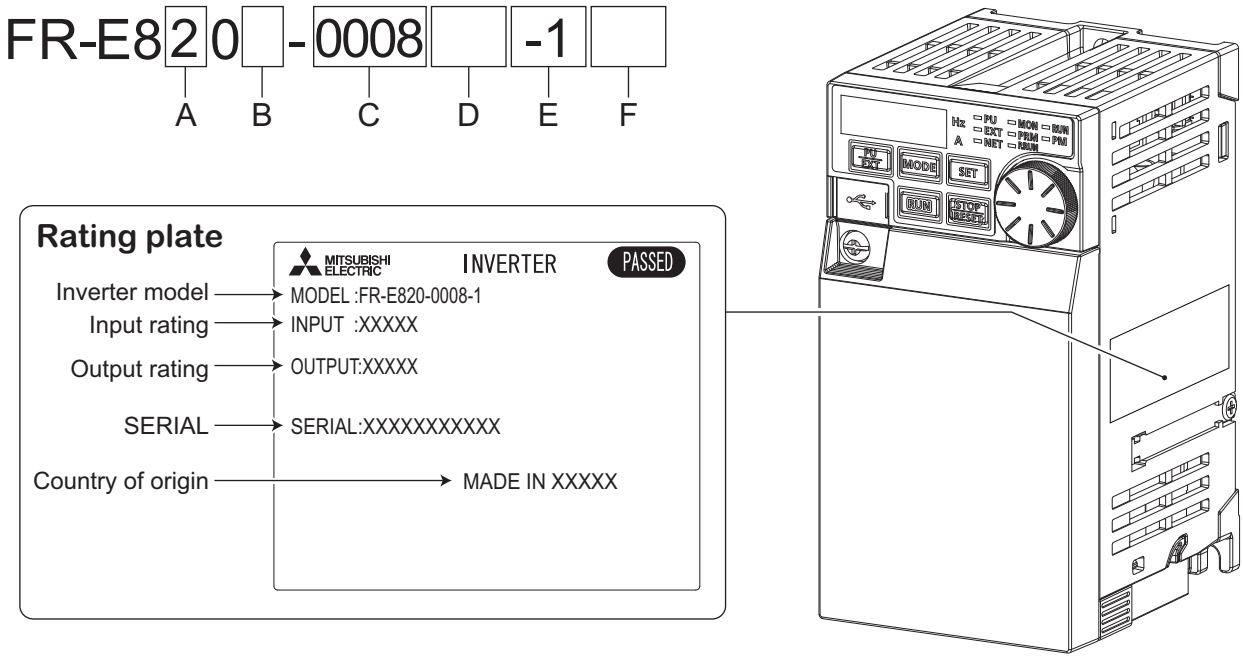

- A: The voltage class is shown.

Symbol	Voltage class
2	200 V class
4	400 V class

- B: The number of phases of the power source is shown.

Symbol	Description
None	Three-phase input
S	Single-phase input

- C: The inverter rated capacity or the inverter rated current is shown.

Symbol	Description
0.1K to 22K	Inverter ND rated capacity (kW)
0008 to 0900	Inverter ND rated current (A)

- D: The communication type and the functional safety specification are shown.

Symbol	Communication / functional safety
None	Standard model (RS-485 + SIL2/PLd)
E	Ethernet model (Ethernet + SIL2/PLd)
SCE	Safety communication model (Ethernet + SIL3/PLe)

- E: The output specification for monitoring and the rated frequency are shown for the standard model, and the communication protocol group is shown for the Ethernet model and the safety communication model. The control logic is fixed to the source logic for the safety communication model.

Symbol	Monitoring/protocol specifications	Rated frequency (initial setting)	Control logic	
			Input signal (initial status)	Safety stop signal
-1	Pulse (terminal FM)	60 Hz	Sink logic	Source logic (fixed)
-4	Voltage (terminal AM)	50 Hz	Source logic	
-5	Voltage (terminal AM)	60 Hz	Sink logic	
PA	Protocol group A (CC-Link IE TSN, CC-Link IE Field Network Basic, MODBUS/TCP, EtherNet/IP, and BACnet/IP)	60 Hz	Sink logic	
PB	Protocol group B (CC-Link IE TSN, CC-Link IE Field Network Basic, MODBUS/TCP, PROFINET)	50 Hz	Sink logic / source logic*1	
PC*2	Protocol group C (EtherCAT)	50 Hz	Sink logic / source logic*1	

*1 The initial status of the control logic differs depending on the inverter model.
Sink logic for the models indicated with the rated capacity (kW)
Source logic for the models indicated with the rated current (A).
*2 Available for the Ethernet model only.

- F: Availability of circuit board coating / plated conductors is shown.

Symbol	Circuit board coating*1	Plated conductor
None	Without coating	Without plated conductors
-60	With coating	Without plated conductors
-06*2	With coating	With plated conductors

*1 Conforming to IEC 60721-3-3:1994 3C2
*2 Applicable for the FR-E820-0470(11K) or higher, and the FR-E840-0230(11K) or higher.

NOTE

- In this Instruction Manual, the inverter model name consists of the inverter rated current and the applicable motor capacity.
(Example) FR-E820-0008(0.1K)

◆ Accessory

- Fan cover fixing screws
These screws are necessary for compliance with the EU Directives. For details, refer to the document enclosed with the product.

Capacity	Screw size (mm)	Quantity
FR-E820-0080(1.5K) to FR-E820-0330(7.5K), FR-E840-0016(0.4K) to FR-E840-0170(7.5K), FR-E820S-0080(1.5K) or higher	M3 × 35	1
FR-E820-0470(11K), FR-E820-0600(15K), FR-E840-0230(11K), FR-E840-0300(15K)	M3 × 35	2
FR-E820-0760(18.5K) or higher, FR-E840-0380(18.5K) or higher	M3 × 50	2

◆ How to read the SERIAL number

Rating plate example

□□ ○○ ○ ○○○○○○
Symbol Year Month Control number
SERIAL

The SERIAL consists of two symbols, three characters indicating the production year and month, and six characters indicating the control number.
The last two digits of the production year are indicated as the Year, and the Month is indicated by 1 to 9, X (October), Y (November), or Z (December).

1.2 Component names

◆ Standard model

Component names are as follows.

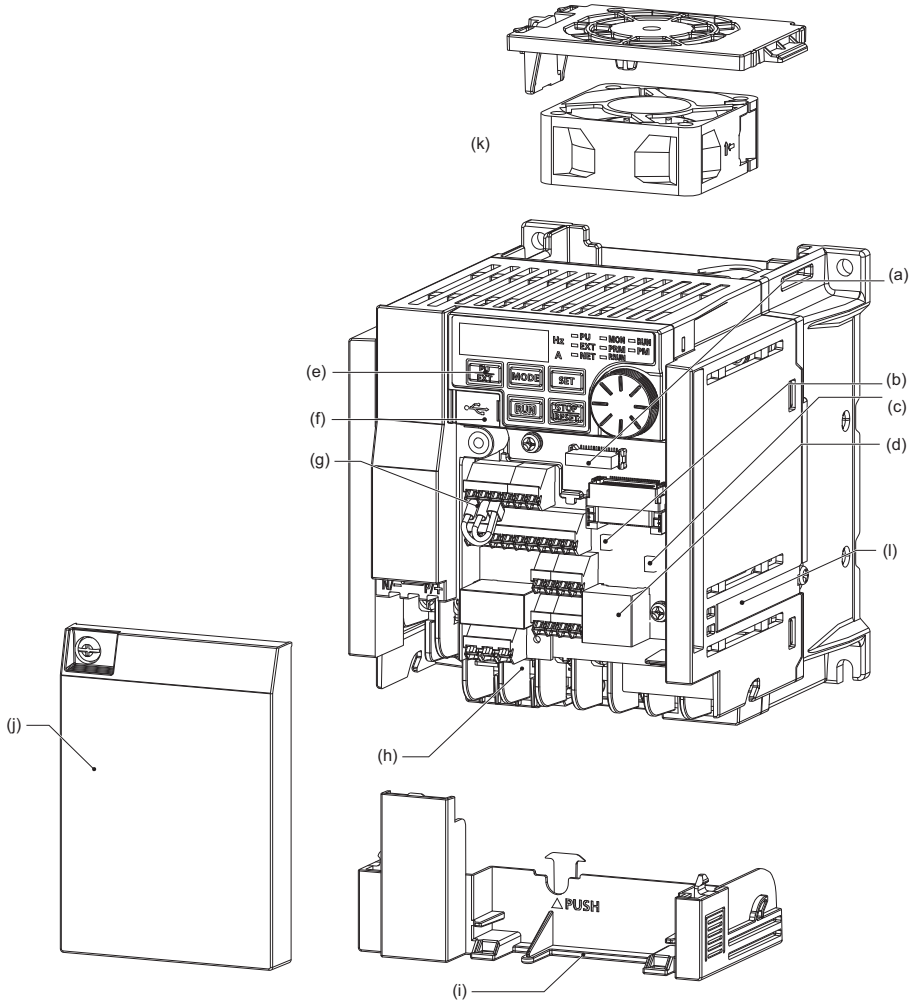

Symbol	Name	Description	Refer to page
(a)	Plug-in option connection connector	Connects a plug-in option or a communication option.	Instruction Manual of each option
(b)	Control logic switch	Select the sink logic (SINK) or the source logic (SOURCE).	67
(c)	Voltage/current input switch	Select voltage or current for the input via terminals 2 and 4.	*1
(d)	PU connector	Used for the RS-485 communication.	85
(e)	Operation panel	Operates and monitors the inverter. The operation panel cannot be removed from the inverter.	*1
(f)	USB mini B connector	Connector for a personal computer. Enables communication with FR Configurator2.	88
(g)	Control circuit terminal block	Connects cables for the control circuit.	60
(h)	Main circuit terminal block	Connects cables for the main circuit.	51
(i)	Comb-shaped wiring cover	This cover is removable without unplugging cables.	27
(j)	Front cover	Remove this cover for wiring.	27
(k)	Cooling fan	Cools the inverter (FR-E820-0080(1.5K) or higher, FR-E840-0040(1.5K) or higher, and FR-E820S-0080(1.5K) or higher)	*2
(l)	Earth plate	Connects the option and the inverter for earthing (grounding).	Instruction Manual of each option

*1 Refer to the FR-E800 Instruction Manual (Function).
*2 Refer to the FR-E800 Instruction Manual (Maintenance).

◆ Ethernet model

Component names are as follows.

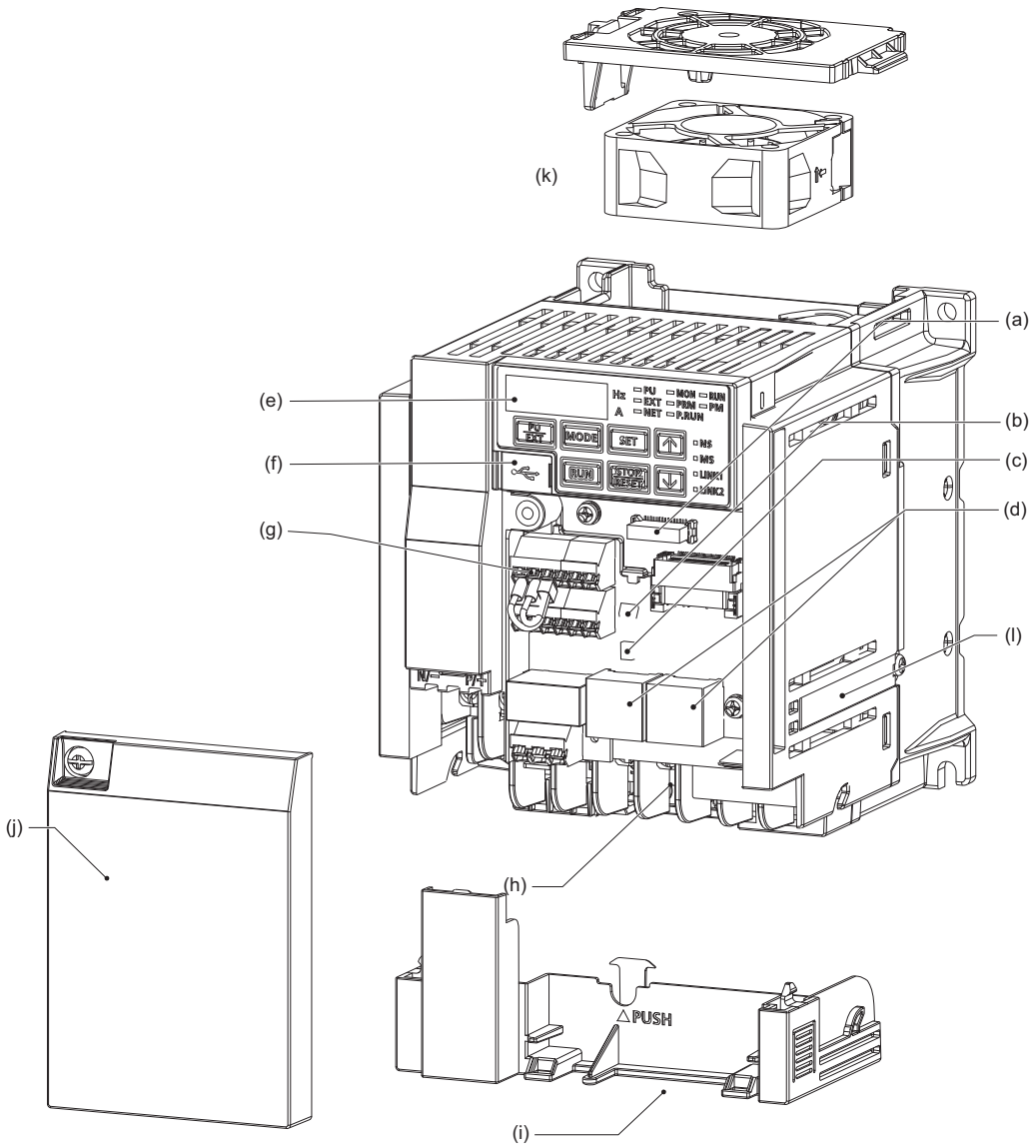

Symbol	Name	Description	Refer to page
(a)	Plug-in option connection connector	Connects a plug-in option or a communication option.	Instruction Manual of each option
(b)	Control logic switch	Select the sink logic (SINK) or the source logic (SOURCE).	67
(c)	Voltage/current input switch	Select voltage or current for the input via terminals 2 and 4.	*1
(d)	Ethernet connector (2 ports)	Connector for the Ethernet dedicated cable for connection to the network.	86
(e)	Operation panel	Operates and monitors the inverter. The operation panel cannot be removed from the inverter.	*1
(f)	USB mini B connector	Connector for a personal computer. Enables communication with FR Configurator2.	88
(g)	Control circuit terminal block	Connects cables for the control circuit.	60
(h)	Main circuit terminal block	Connects cables for the main circuit.	51
(i)	Comb-shaped wiring cover	This cover is removable without unplugging cables.	27
(j)	Front cover	Remove this cover for wiring.	27
(k)	Cooling fan	Cools the inverter (FR-E820-0080(1.5K) or higher, FR-E840-0040(1.5K) or higher, and FR-E820S-0080(1.5K) or higher)	*2
(l)	Earth plate	Connects the option and the inverter for earthing (grounding).	Instruction Manual of each option

*1 Refer to the FR-E800 Instruction Manual (Function).
*2 Refer to the FR-E800 Instruction Manual (Maintenance).

◆ Safety communication model

Component names are as follows.

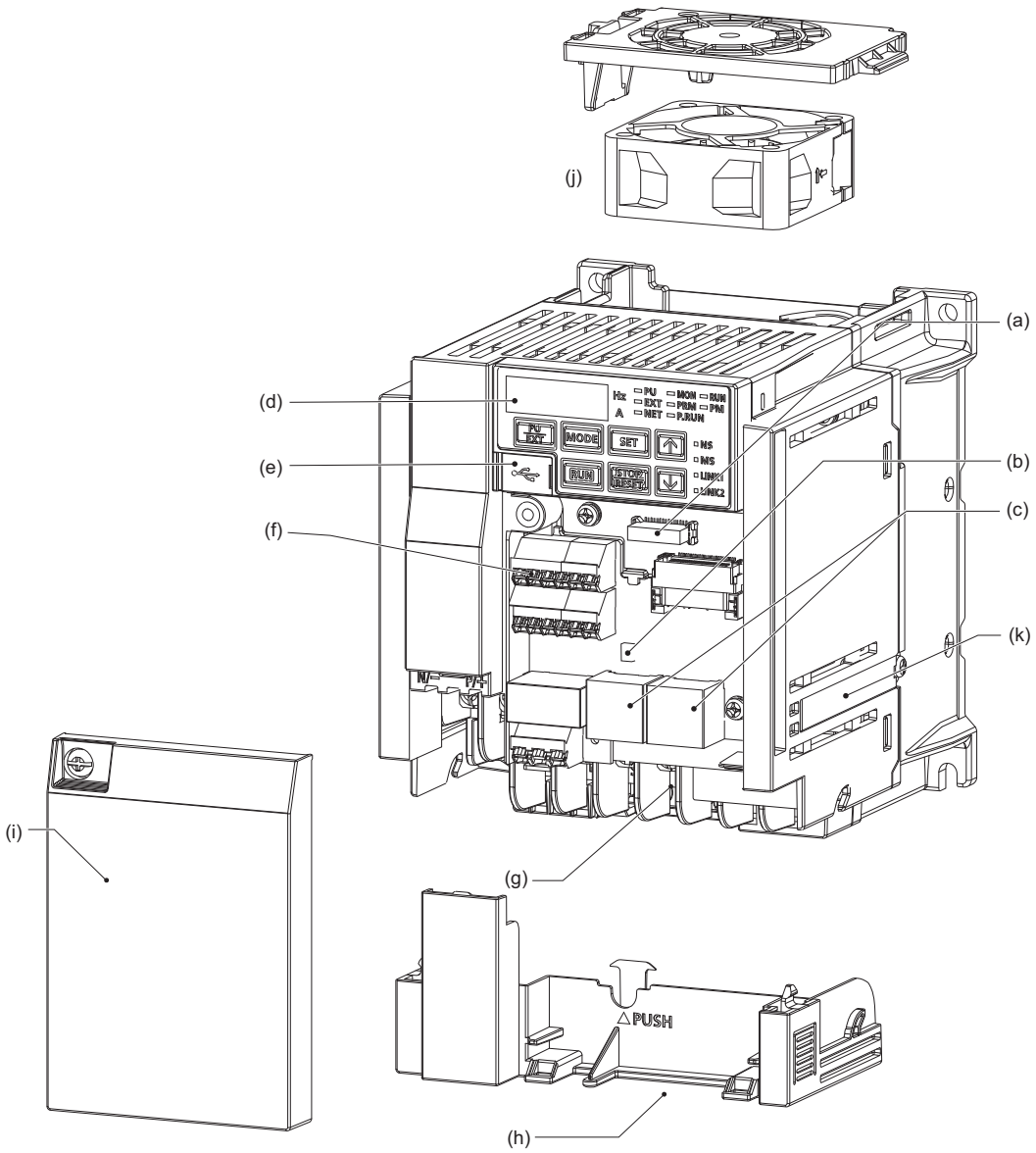

Symbol	Name	Description	Refer to page
(a)	Plug-in option connection connector	Connects a plug-in option or a communication option.	Instruction Manual of each option
(b)	Voltage/current input switch	Select voltage or current for the input via terminals 2 and 4.	*1
(c)	Ethernet connector (2 ports)	Connector for the Ethernet dedicated cable for connection to the network.	86
(d)	Operation panel	Operates and monitors the inverter. The operation panel cannot be removed from the inverter.	*1
(e)	USB mini B connector	Connector for a personal computer. Enables communication with FR Configurator2.	88
(f)	Control circuit terminal block	Connects cables for the control circuit.	60
(g)	Main circuit terminal block	Connects cables for the main circuit.	51
(h)	Comb-shaped wiring cover	This cover is removable without unplugging cables.	27
(i)	Front cover	Remove this cover for wiring.	27
(j)	Cooling fan	Cools the inverter (FR-E820-0080(1.5K)SCE or higher, FR-E840-0040(1.5K)SCE or higher, and FR-E820S-0080(1.5K)SCE or higher)	*2
(k)	Earth plate	Connects the option and the inverter for earthing (grounding).	Instruction Manual of each option

*1 Refer to the FR-E800 Instruction Manual (Function).
*2 Refer to the FR-E800 Instruction Manual (Maintenance).

1.3 Operation steps

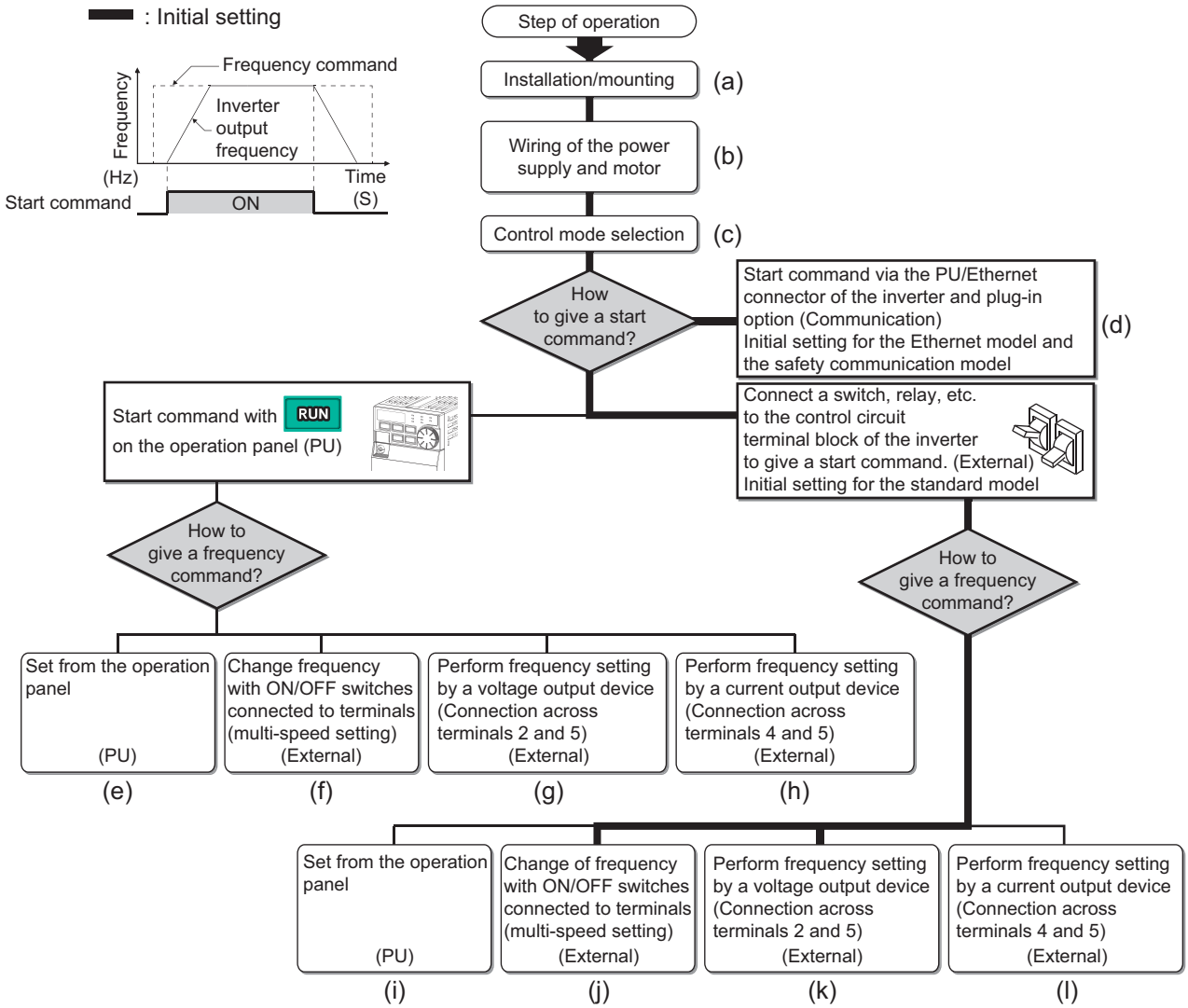

Symbol	Overview	Refer to page
(a)	Install the inverter.	33
(b)	Perform wiring for the power supply and the motor.	51
(c)	Select the control method (V/F control, Advanced magnetic flux vector control, Real sensorless vector control, Vector control, and PM sensorless vector control).	Instruction Manual (Function)
(d)	Give the start command via communication.	Instruction Manual (Communication)
(e)	Give both the start and frequency commands from the PU. (PU operation mode)	Instruction Manual (Function)
(f)	Give the start command from the PU and the frequency command via terminals RH, RM, and RL. (External/PU combined operation mode 2)	Instruction Manual (Function)
(g)	Give the start command from the PU and the frequency command by voltage input via terminal 2. (External/PU combined operation mode 2)	Instruction Manual (Function)
(h)	Give the start command from the PU and the frequency command by current input via terminal 4. (External/PU combined operation mode 2)	Instruction Manual (Function)
(i)	Give the start command via terminal STF or STR and the frequency command from the PU. (External/PU combined operation mode 1)	Instruction Manual (Function)
(j)	Give the start command via terminal STF or STR and the frequency command via terminals RH, RM, and RL. (External operation mode)	Instruction Manual (Function)
(k)	Give the start command via terminal STF or STR and the frequency command by voltage input via terminal 2. (External operation mode)	Instruction Manual (Function)
(l)	Give the start command via terminal STF or STR and the frequency command by current input via terminal 4. (External operation mode)	Instruction Manual (Function)

1.4 Related manuals

Manuals related to the FR-E800 inverter are shown in the following table.

Name	Manual number
FR-E800 Inverter Safety Guideline	IB-0600857ENG
FR-E800-E Inverter Safety Guideline	IB-0600860ENG
FR-E800-SCE Inverter Safety Guideline	IB-0600921ENG
FR-E800 Instruction Manual (Function)	IB-0600868ENG
FR-E800 Instruction Manual (Communication)	IB-0600871ENG
FR-E800 Instruction Manual (Maintenance)	IB-0600874ENG
FR-E800 Instruction Manual (Functional Safety)	BCN-A23488-000
FR-E800-SCE Instruction Manual (Functional safety)	BCN-A23488-004
FR Configurator 2 Instruction Manual	IB-0600516ENG
PLC Function Programming Manual	IB-0600492ENG

CHAPTER 2 Installation and Wiring

2.1 Peripheral devices 22
2.2 Removal and reinstallation of the front cover 27
2.3 Installation of the inverter and enclosure design 33
2.4 Terminal connection diagrams 41
2.5 Main circuit terminals 51
2.6 Control circuit 60
2.7 Connection to a motor with encoder (Vector control) 78
2.8 Communication connectors and terminals 85
2.9 Connection of stand-alone option units 89

2 Installation and Wiring

This chapter explains the installation and the wiring of this product.
Always read the instructions before use.

2.1 Peripheral devices

2.1.1 Inverter and peripheral devices

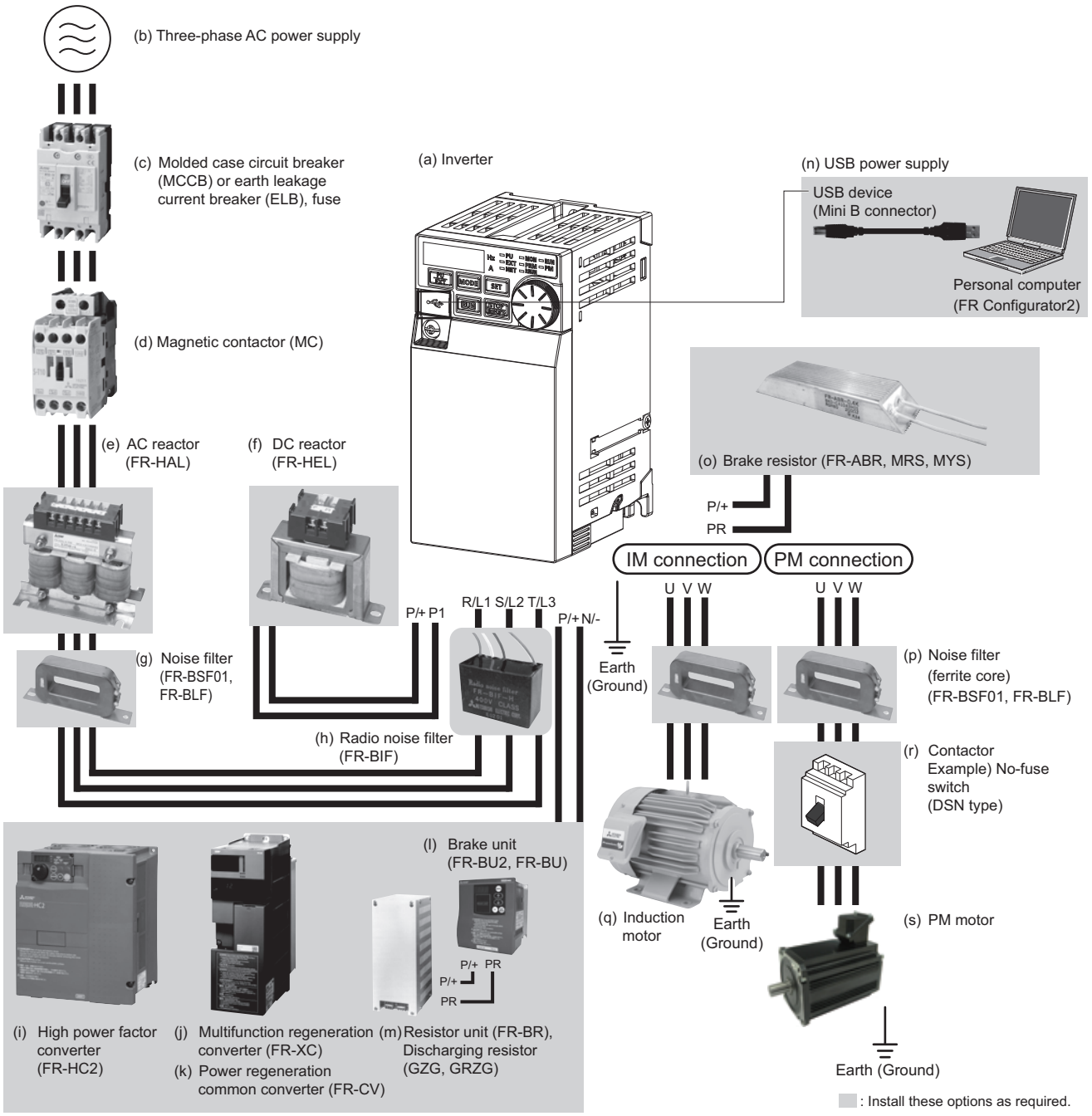

Symbol	Name	Overview	Refer to page
(a)	Inverter (FR-E800)	The life of the inverter is influenced by the surrounding air temperature. The surrounding air temperature should be as low as possible within the permissible range. This must be noted especially when the inverter is installed in an enclosure. Incorrect wiring may lead to damage of the inverter. The control signal lines must be kept fully away from the main circuit lines to protect them from noise.	33, 41
(b)	Three-phase AC power supply	Must be within the permissible power supply specifications of the inverter.	120
(c)	Molded case circuit breaker (MCCB), earth leakage circuit breaker (ELB), or fuse	Must be selected carefully since an inrush current flows in the inverter at power ON.	25
(d)	Magnetic contactor (MC)	Install this to ensure safety. Do not use this to start and stop the inverter. Doing so will shorten the life of the inverter.	110
(e)	AC reactor (FR-HAL)	Install this to suppress harmonics and to improve the power factor. An AC reactor (FR-HAL) (option) is required when installing the inverter near a large power supply system (500 kVA or more). Under such condition, the inverter may be damaged if you do not use a reactor. Select a reactor according to the applied motor capacity.	109
(f)	DC reactor (FR-HEL)	Install this to suppress harmonics and to improve the power factor. Select a reactor according to the applied motor capacity. When using a DC reactor, remove the jumper across terminals P/+ and P1 before connecting a DC reactor to the inverter.	97
(g)	Noise filter (ferrite core) (FR-BSF01, FR-BLF)	Install this to reduce the electromagnetic noise generated from the inverter.	102
(h)	Radio noise filter (FR-BIF)	Install this to reduce the radio noise.	—
(i)	High power factor converter (FR-HC2)	Suppresses the power supply harmonics significantly. Install this as required.*1	94
(j)	Multifunction regeneration converter (FR-XC)	Provides a large braking capability. Install this as required.*2	95
(k)	Power regeneration common converter (FR-CV)		96
(l)	Brake unit (FR-BU2, FR-BU, BU)	Allows the inverter to provide the optimal regenerative braking capability. Install this as required.	93
(m)	Resistor unit (FR-BR), discharge resistor (GZG, GRZG)		
(n)	USB connection	Connect between the inverter and a personal computer with a USB (ver. 1.1) cable.	88
(o)	Brake resistor (FR-ABR, MRS, MYS)	Increases the braking capability. (0.4K or higher)	89
(p)	Noise filter (ferrite core) (FR-BSF01, FR-BLF)	Install this to reduce the electromagnetic noise generated from the inverter. The noise filter is effective in the range from about 0.5 to 5 MHz. A wire should be wound four turns at maximum.	102
(q)	Induction motor	Connect a squirrel-cage induction motor.	—
(r)	Example) No-fuse switch (DSN type)	Connect this for an application where a PM motor is driven by the load even while the inverter power is OFF. Do not open or close the contactor while the inverter is running (outputting).	—
(s)	PM motor	An IPM motor cannot be driven by the commercial power supply.	—

*1 Not available for the FR-E800-SCE.
*2 Only the FR-XC in power regeneration mode is available for the FR-E800-SCE.

NOTE

- To prevent an electric shock, always earth (ground) the motor and inverter.
- Do not install a power factor correction capacitor, surge suppressor, or capacitor type filter on the inverter's output side. Doing so will cause the inverter shut off or damage the capacitor or surge suppressor. If any of the above devices is connected, immediately remove it. When installing a molded case circuit breaker on the output side of the inverter, contact the manufacturer of the molded case circuit breaker.
- Electromagnetic wave interference:
  The input/output (main circuit) of the inverter includes high frequency components, which may interfere with the communication devices (such as AM radios) used near the inverter. Connect the optional radio noise filter FR-BIF (for use in the input side only), line noise filter FR-BSF01/FR-BLF, Filterpack, or EMC filter to minimize interference.
- For details of options and peripheral devices, refer to the respective Instruction Manual.
- A PM motor cannot be driven by the commercial power supply.
- A PM motor is a motor with permanent magnets embedded inside. High voltage is generated at the motor terminals while the motor is running. Before closing the contactor at the output side, make sure that the inverter power is ON and the motor is stopped.

2.1.2 Peripheral devices

Check the model of the inverter you purchased. Appropriate peripheral devices must be selected according to the capacity. Refer to the following table for right selection.

◆ Molded case circuit breaker / earth leakage circuit breaker

- This is a matrix showing the rated current of the molded case circuit breaker (MCCB) or earth leakage circuit breaker (ELB) (NF or NV type) according to the selected inverter and rating.

Voltage	Inverter model	Without AC/DC power factor improving reactor		With AC/DC power factor improving reactor	
		LD	ND	LD	ND
Three-phase 200 V class	FR-E820-0008(0.1K)	5 A	5 A	5 A	5 A
	FR-E820-0015(0.2K)	5 A	5 A	5 A	5 A
	FR-E820-0030(0.4K)	10 A	5 A	5 A	5 A
	FR-E820-0050(0.75K)	15 A	10 A	10 A	10 A
	FR-E820-0080(1.5K)	20 A	15 A	15 A	15 A
	FR-E820-0110(2.2K)	30 A	20 A	20 A	15 A
	FR-E820-0175(3.7K)	40 A	30 A	30 A	30 A
	FR-E820-0240(5.5K)	60 A	50 A	50 A	40 A
	FR-E820-0330(7.5K)	75 A	60 A	60 A	50 A
	FR-E820-0470(11K)	125 A	75 A	100 A	75 A
	FR-E820-0600(15K)	150 A	125 A	125 A	100 A
	FR-E820-0760(18.5K)	175 A	150 A	125 A	125 A
	FR-E820-0900(22K)	225 A	175 A	175 A	150 A
Three-phase 400 V class	FR-E840-0016(0.4K)	5 A	5 A	5 A	5 A
	FR-E840-0026(0.75K)	10 A	5 A	10 A	5 A
	FR-E840-0040(1.5K)	10 A	10 A	10 A	10 A
	FR-E840-0060(2.2K)	20 A	15 A	15 A	10 A
	FR-E840-0095(3.7K)	30 A	20 A	20 A	15 A
	FR-E840-0120(5.5K)	40 A	30 A	30 A	20 A
	FR-E840-0170(7.5K)	50 A	30 A	40 A	30 A
	FR-E840-0230(11K)	75 A	50 A	50 A	40 A
	FR-E840-0300(15K)	100 A	60 A	60 A	50 A
	FR-E840-0380(18.5K)	100 A	75 A	75 A	60 A
	FR-E840-0440(22K)	125 A	100 A	100 A	75 A
Single-phase 200 V class	FR-E820S-0008(0.1K)	—	5 A	—	5 A
	FR-E820S-0015(0.2K)	—	5 A	—	5 A
	FR-E820S-0030(0.4K)	—	10 A	—	10 A
	FR-E820S-0050(0.75K)	—	15 A	—	10 A
	FR-E820S-0080(1.5K)	—	20 A	—	20 A
	FR-E820S-0110(2.2K)	—	40 A	—	30 A

NOTE

- Select an MCCB according to the power supply capacity.
- Install one MCCB per inverter.

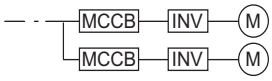

- For the use in the United States or Canada, refer to "Instructions for UL and cUL" in the document enclosed with the product and select appropriate fuses.
- When the inverter capacity is larger than the motor capacity, select an MCCB and a magnetic contactor according to the inverter model, and select cables and reactors according to the motor output.
- When the breaker installed on the inverter input side is shut off, check for the wiring fault (short circuit), damage to internal parts of the inverter etc. The cause of the output shutoff must be identified and removed before turning ON the power of the breaker.

◆ Magnetic contactor at the inverter's input line

- This is a matrix showing the model name of the Mitsubishi magnetic contactor to be installed at the inverter's input line according to the selected inverter and rating.

Voltage	Inverter model	Without AC/DC power factor improving reactor		With AC/DC power factor improving reactor	
		LD	ND	LD	ND
Three-phase 200 V class	FR-E820-0008(0.1K)	S-T10	S-T10	S-T10	S-T10
	FR-E820-0015(0.2K)	S-T10	S-T10	S-T10	S-T10
	FR-E820-0030(0.4K)	S-T10	S-T10	S-T10	S-T10
	FR-E820-0050(0.75K)	S-T10	S-T10	S-T10	S-T10
	FR-E820-0080(1.5K)	S-T10	S-T10	S-T10	S-T10
	FR-E820-0110(2.2K)	S-T10	S-T10	S-T10	S-T10
	FR-E820-0175(3.7K)	S-T21	S-T21	S-T10	S-T10
	FR-E820-0240(5.5K)	S-T35	S-T35	S-T21	S-T21
	FR-E820-0330(7.5K)	S-T35	S-T35	S-T35	S-T35
	FR-E820-0470(11K)	S-T50	S-T35	S-T50	S-T35
	FR-E820-0600(15K)	S-T50	S-T50	S-T50	S-T50
	FR-E820-0760(18.5K)	S-T65	S-T65	S-T65	S-T50
	FR-E820-0900(22K)	S-T100	S-T100	S-T100	S-T65
Three-phase 400 V class	FR-E840-0016(0.4K)	S-T10	S-T10	S-T10	S-T10
	FR-E840-0026(0.75K)	S-T10	S-T10	S-T10	S-T10
	FR-E840-0040(1.5K)	S-T10	S-T10	S-T10	S-T10
	FR-E840-0060(2.2K)	S-T10	S-T10	S-T10	S-T10
	FR-E840-0095(3.7K)	S-T21	S-T10	S-T12	S-T10
	FR-E840-0120(5.5K)	S-T21	S-T21	S-T21	S-T12
	FR-E840-0170(7.5K)	S-T35	S-T21	S-T21	S-T21
	FR-E840-0230(11K)	S-T35	S-T21	S-T35	S-T21
	FR-E840-0300(15K)	S-T35	S-T35	S-T35	S-T21
	FR-E840-0380(18.5K)	S-T35	S-T35	S-T35	S-T35
	FR-E840-0440(22K)	S-T50	S-T35	S-T50	S-T35
Single-phase 200 V class	FR-E820S-0008(0.1K)	—	S-T10	—	S-T10
	FR-E820S-0015(0.2K)	—	S-T10	—	S-T10
	FR-E820S-0030(0.4K)	—	S-T10	—	S-T10
	FR-E820S-0050(0.75K)	—	S-T10	—	S-T10
	FR-E820S-0080(1.5K)	—	S-T10	—	S-T10
	FR-E820S-0110(2.2K)	—	S-T21	—	S-T10

NOTE

- The matrix shows the magnetic contactor selected according to the standards of Japan Electrical Manufacturers' Association (JEM standards) for AC-1 class. The electrical durability of magnetic contactor is 500,000 times. When the MC is used for emergency stops during motor driving, the electrical durability is 25 times. If using the MC for emergency stop during motor driving, select the MC for the inverter input current according to the rated current against JEM 1038 standards for AC-3 class. When installing an MC on the inverter output side to switch to the commercial-power supply operation while running a general-purpose motor, select the MC for the rated motor current according to the rated current against JEM 1038 standards for AC-3 class.
- When the inverter capacity is larger than the motor capacity, select an MCCB and a magnetic contactor according to the inverter model, and select cables and reactors according to the motor output.
- When the breaker installed on the inverter input side is shut off, check for the wiring fault (short circuit), damage to internal parts of the inverter etc. The cause of the output shutoff must be identified and removed before turning ON the power of the breaker.

2.2 Removal and reinstallation of the front cover

◆ Removal of the front cover

- Example of FR-E820-0008(0.1K)

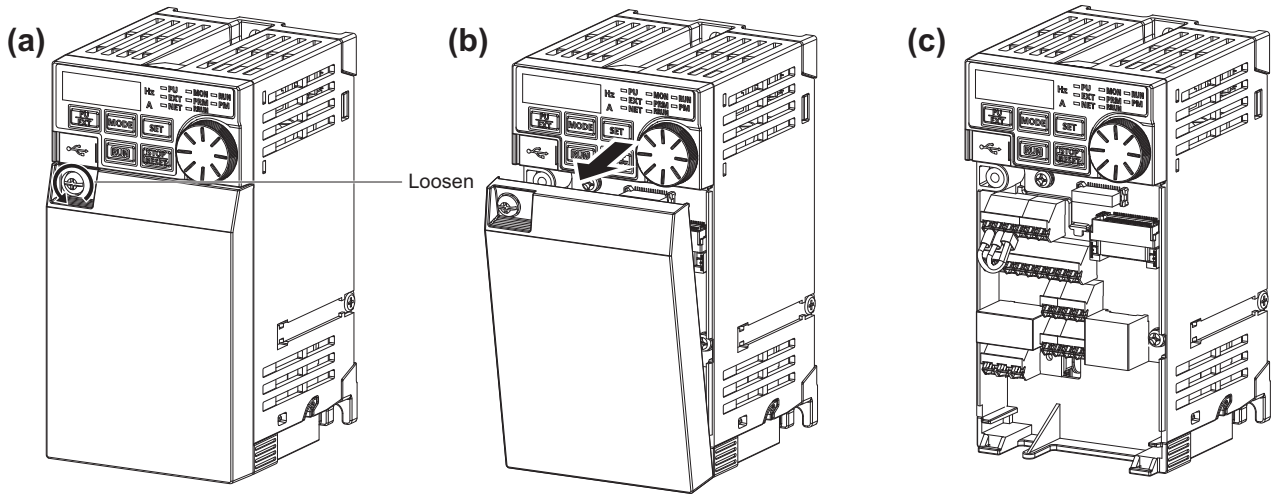

(a) Loosen the screw on the front cover. (This screw cannot be removed.)

(b) Put a finger on the recess for the screw of the front cover and pull out the cover using its lower side as a support.

(c) With the cover removed, the control circuit terminals can be wired and the plug-in option can be installed.

◆ Reinstallation of the front cover

- Example of FR-E820-0008(0.1K)

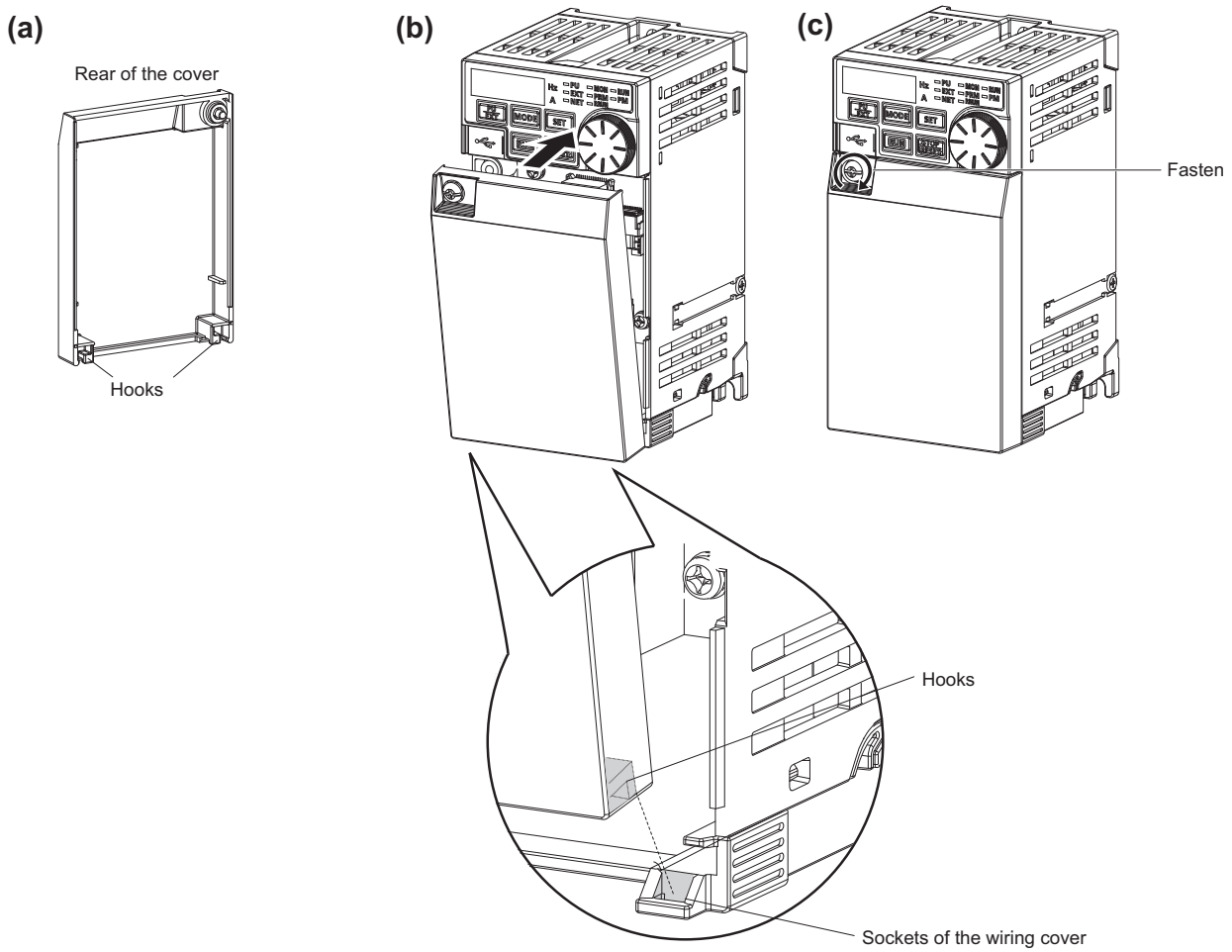

(a) Check the position of the hooks on the rear of the cover.

(b) Insert the hooks of the cover into the sockets of the wiring cover, and reinstall the cover to the inverter.

(c) Tighten the mounting screw of the front cover. (Tightening torque: 0.6 to 0.8 N·m)

NOTE

- Fully make sure that the front cover has been reinstalled securely. Always tighten the installation screws of the front cover.

◆ Removal of the lower front cover

- FR-E820-0240(5.5K) or higher and FR-E840-0230(11K) or higher

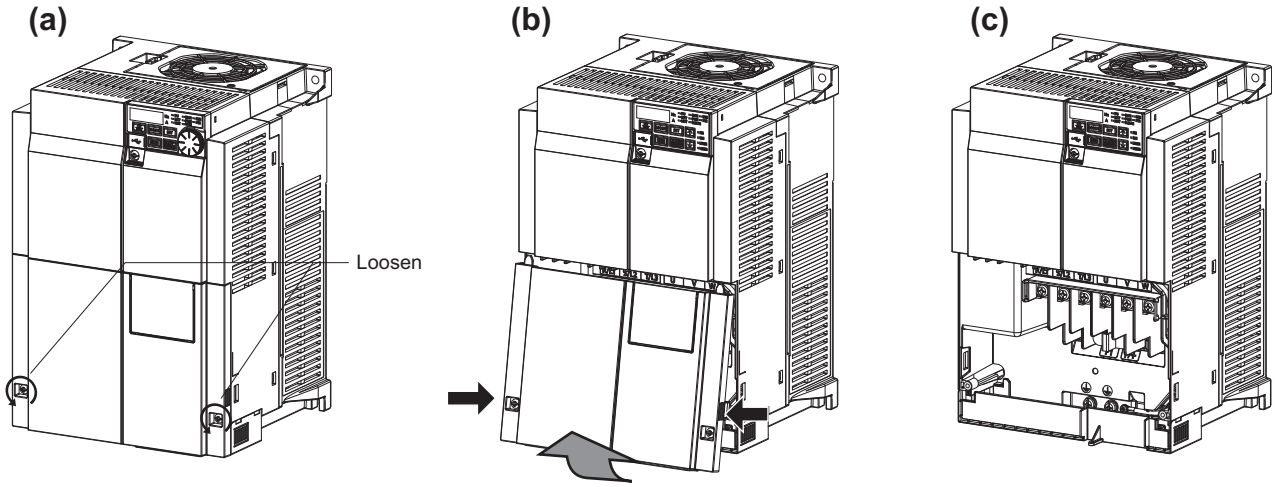

(a) Loosen the screws on the lower front cover. (These screws cannot be removed.)

(b) While holding the areas around the installation hooks on the sides of the lower front cover, pull out the cover using its upper side as a support.

(c) With the lower front cover removed, wiring of the main circuit terminals and control circuit terminals can be performed.

◆ Reinstallation of the lower front cover

- FR-E820-0240(5.5K) or higher and FR-E840-0230(11K) or higher

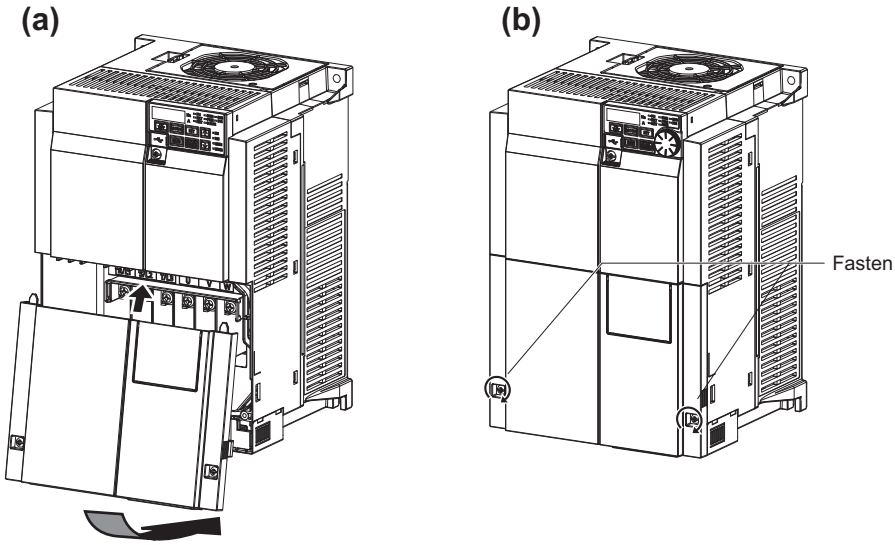

(a) Install the lower front cover by inserting the upper hooks into the sockets on the inverter.

(b) Tighten the screws on the lower part of the lower front cover.

NOTE

- Fully make sure that the lower front cover is reinstalled securely. Always tighten the mounting screws of the lower front cover.

◆ Removal of the wiring cover

- FR-E820-0050(0.75K) or lower and FR-E820S-0030(0.4K) or lower

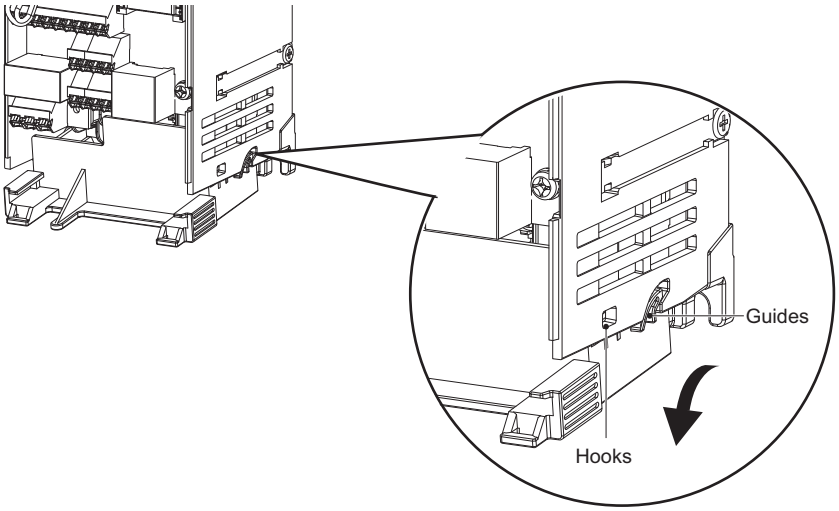

Pull out the cover along the guides in the direction shown by the arrow in the figure above.

- FR-E820-0080(1.5K) to FR-E820-0175(3.7K), FR-E840-0016(0.4K) to FR-E840-0095(3.7K), and FR-E820S-0050(0.75K) or higher

(a)

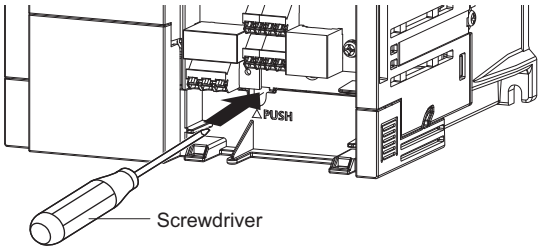

(b)

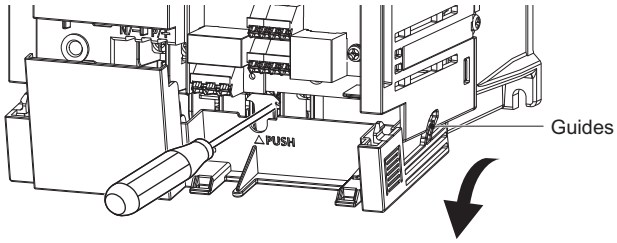

(a) Insert a tool such as a flathead screwdriver into the half-hole above the "PUSH" mark on the wiring cover to push the stopper behind the wiring cover approx. 3 mm.

(b) Pull out the cover along the guides in the direction shown by the arrow in the figure above.

- FR-E820-0240(5.5K) to FR-E820-0600(15K), FR-E840-0230(11K), and FR-E840-0300(15K)

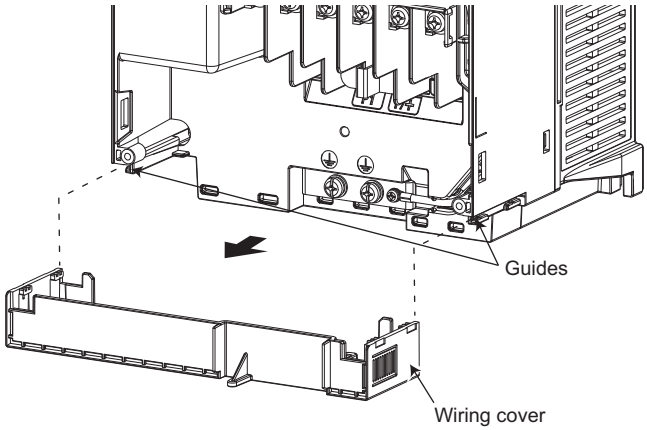

Pull out the cover along the guides in the direction shown by the arrow in the figure above.

- FR-E840-0120(5.5K) and FR-E840-0170(7.5K)

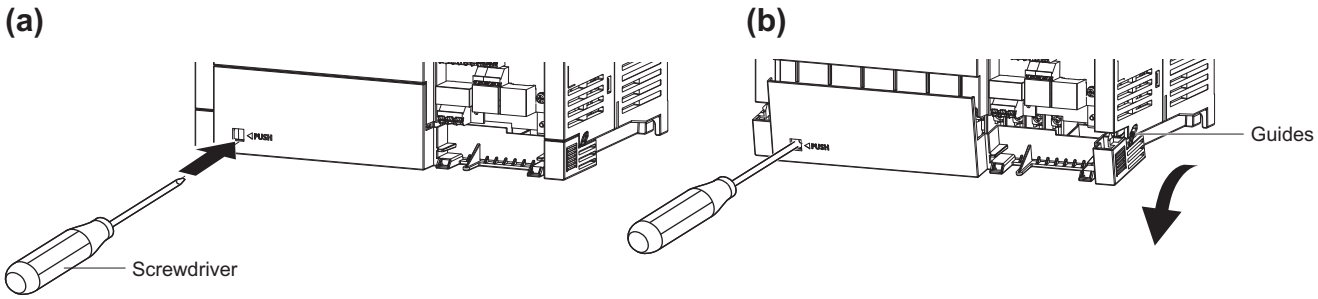

(a) Insert a tool such as a flathead screwdriver into the half-hole above the "PUSH" mark on the wiring cover to push the stopper behind the wiring cover approx. 3 mm.

(b) Pull out the cover along the guides in the direction shown by the arrow in the figure above.

- FR-E820-0760(18.5K), FR-E820-0900(22K), FR-E840-0380(18.5K), and FR-E840-0440(22K)

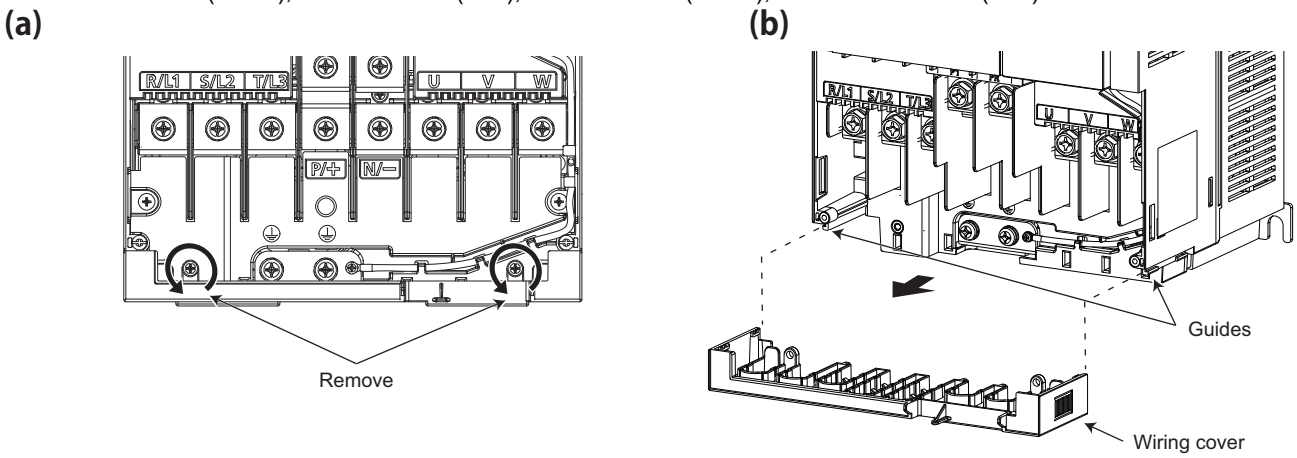

(a) Remove the mounting screws of the wiring cover.

(b) Pull out the cover along the guides in the direction shown by the arrow in the figure above.

◆ Reinstallation of the wiring cover

- FR-E820-0050(0.75K) or lower and FR-E820S-0030(0.4K) or lower

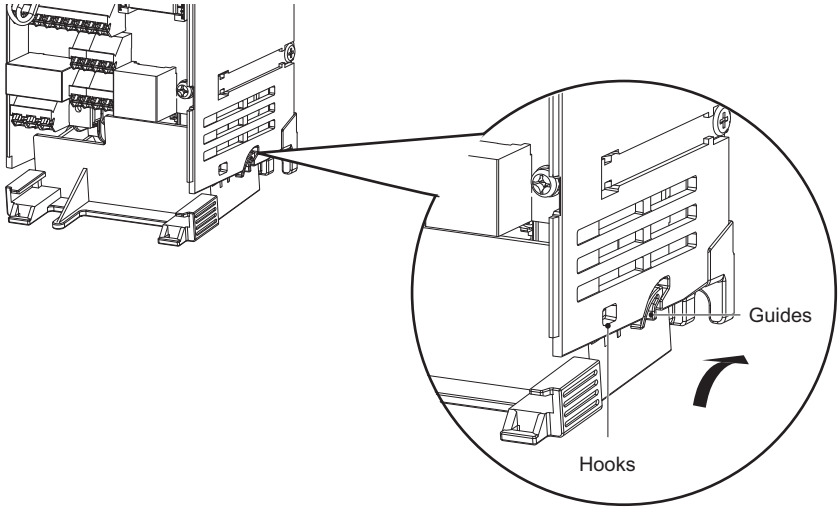

Fit the cover to the inverter along the guides in the direction shown by the arrow in the figure above.

- FR-E820-0080(1.5K) to FR-E820-0175(3.7K), FR-E840-0016(0.4K) to FR-E840-0095(3.7K), and FR-E820S-0050(0.75K) or higher

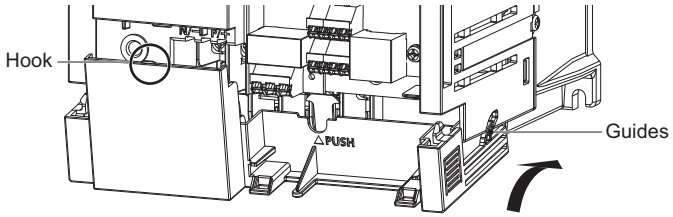

Fit the cover to the inverter along the guides, and push the hook into the socket.

- FR-E820-0240(5.5K) to FR-E820-0600(15K), FR-E840-0230(11K), and FR-E840-0300(15K)

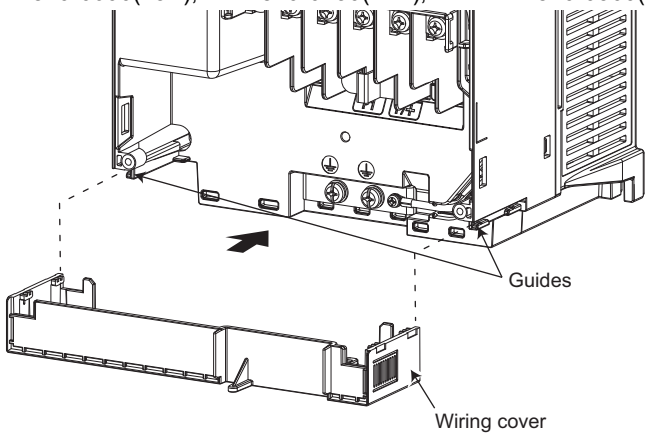

Fit the cover to the inverter along the guides.

- FR-E840-0120(5.5K) and FR-E840-0170(7.5K)

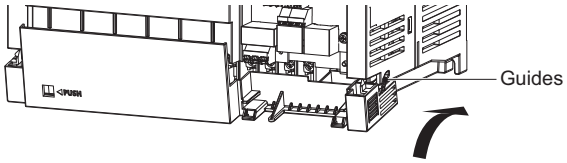

Fit the cover to the inverter along the guides.

- FR-E820-0760(18.5K), FR-E820-0900(22K), FR-E840-0380(18.5K), and FR-E840-0440(22K)

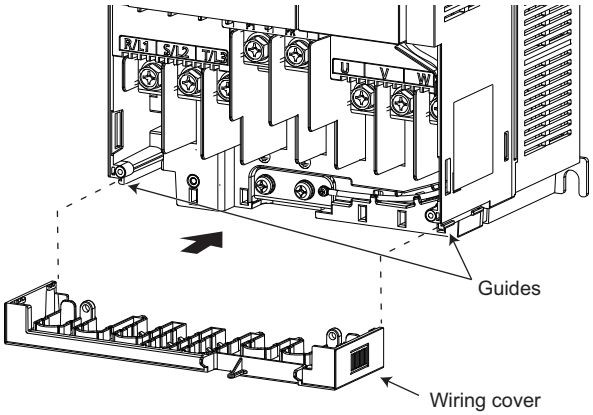

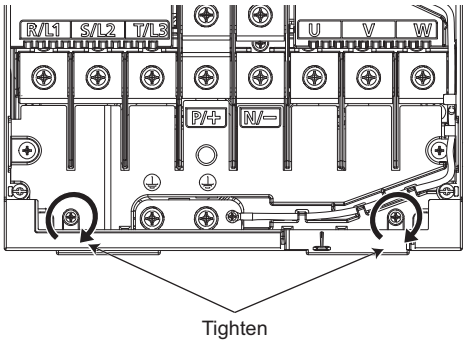

Fit the cover to the inverter along the guides.
Tighten the mounting screws of the front cover. (Tightening torque: 0.6 to 0.8 N·m)

2.3 Installation of the inverter and enclosure design

2.3.1 Inverter installation environment

The following table lists the standard specifications of the inverter installation environment. Using the inverter in an environment that does not satisfy the conditions deteriorates the performance, shortens the life, and causes a failure. Refer to the following points, and take adequate measures.

◆ Standard environmental specifications of the inverter

Item	Description	
Surrounding air temperature	-20°C to +60°C (The rated current must be reduced at a temperature above 50°C. (Refer to page 36.))	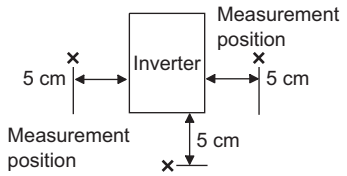
Ambient humidity	With circuit board coating (conforming to IEC 60721-3-3:1994 3C2): 95% RH or less (non-condensing) Without circuit board coating: 90% RH or less (non-condensing)	
Storage temperature	-40°C to +70°C*1	
Atmosphere	Indoors (free from corrosive gas, flammable gas, oil mist, dust and dirt)	
Altitude	Maximum 3000 m*2	
Vibration	5.9 m/s^2 or less at 10 to 55 Hz (in either X, Y, or Z direction)	

*1 Temperature applicable for a short time, for example, in transit.
*2 For installation at an altitude above 1000 m, consider a 3% reduction in the rated current per 500 m increase in altitude.

◆ Temperature

The permissive range of surrounding air temperature of the inverter is -20°C to +60°C. (The rated current must be reduced at a temperature above 50°C. Refer to page 36.) Always operate the inverter within this temperature range. Operation outside this range will considerably shorten the service lives of the semiconductors, parts, capacitors and others. Take the following measures to keep the surrounding air temperature of the inverter within the specified range.

■ Measures against high temperature

- Use a forced ventilation system or similar cooling system. (Refer to page 37.)
- Install the enclosure in an air-conditioned electric chamber.
- Block direct sunlight.
- Provide a shield or similar plate to avoid direct exposure to the radiated heat and wind of a heat source.
- Ventilate the area around the enclosure well.

■ Measures against low temperature

- Provide a space heater in the enclosure.
- Do not power OFF the inverter. (Keep the start signal of the inverter OFF.)

■ Sudden temperature changes

- Select an installation place where temperature does not change suddenly.
- Avoid installing the inverter near the air outlet of an air conditioner.
- If temperature changes are caused by opening/closing of a door, install the inverter away from the door.

NOTE

- For the amount of heat generated by the inverter unit, refer to page 35.

◆ Humidity

Operate the inverter within the ambient air humidity of usually 45 to 90% (up to 95% with circuit board coating). Too high humidity will pose problems of reduced insulation and metal corrosion. On the other hand, too low humidity may cause a spatial electrical breakdown. The humidity conditions for the insulation distance defined in JEM 1103 standard "Insulation Distance from Control Equipment" is 45 to 85%.

■ Measures against high humidity

- Make the enclosure enclosed, and provide it with a hygroscopic agent.
- Provide dry air into the enclosure from outside.
- Provide a space heater in the enclosure.

■ Measures against low humidity

Air with proper humidity can be blown into the enclosure from outside. Also, when installing or inspecting the unit, discharge your body (static electricity) beforehand, and keep your body away from the parts and patterns.

■ Measures against condensation

Condensation may occur if frequent operation stops change the in-enclosure temperature suddenly or if the outside air temperature changes suddenly.

Condensation causes such faults as reduced insulation and corrosion.

- Take the measures against high humidity.
- Do not power OFF the inverter. (Keep the start signal of the inverter OFF.)

◆ Dust, dirt, oil mist

Dust and dirt will cause such faults as poor contacts, reduced insulation and cooling effect due to the moisture-absorbed accumulated dust and dirt, and in-enclosure temperature rise due to a clogged filter. In an atmosphere where conductive powder floats, dust and dirt will cause such faults as malfunction, deteriorated insulation and short circuit in a short time.

Since oil mist will cause similar conditions, it is necessary to take adequate measures.

■ Countermeasure

- Place the inverter in a totally enclosed enclosure.
  Take measures if the in-enclosure temperature rises. (Refer to page 37.)
- Purge air.
  Pump clean air from outside to make the in-enclosure air pressure higher than the outside air pressure.

◆ Corrosive gas, salt damage

If the inverter is exposed to corrosive gas or to salt near a beach, the printed board patterns and parts will corrode or the relays and switches will result in poor contact.

In such places, take the measures given in the previous paragraph.

◆ Explosive, flammable gases

As the inverter is non-explosion proof, it must be contained in an explosion-proof enclosure. In places where explosion may be caused by explosive gas, dust or dirt, an enclosure cannot be used unless it structurally complies with the guidelines and has passed the specified tests. This makes the enclosure itself expensive (including the test charges). The best way is to avoid installation in such places and install the inverter in a non-hazardous place.

◆ High altitude

Use the inverter at an altitude of within 3000 m. For use at an altitude above 1000 m, consider a 3% reduction in the rated current per 500 m increase in altitude.

If it is used at a higher place, it is likely that thin air will reduce the cooling effect and low air pressure will deteriorate dielectric strength.

◆ Vibration, impact

The vibration resistance of the inverter is up to 5.9 m/s^2 at 10 to 55 Hz frequency and 1 mm amplitude for the directions of X, Y, Z axes. Applying vibration and impacts for a long time may loosen the structures and cause poor contacts of connectors, even if those vibration and impacts are within the specified values.

Especially when impacts are applied repeatedly, caution must be taken because such impacts may break the installation feet.

■ **Countermeasure**

- Provide the enclosure with rubber vibration isolators.
- Strengthen the structure to prevent the enclosure from resonance.
- Install the enclosure away from the sources of the vibration.

2.3.2 Amount of heat generated by the inverter

◆ Installing the heat sink inside the enclosure

When the heat sink is installed inside the enclosure, the amount of heat generated by the inverter unit is shown in the following table.

Voltage	Inverter model	Amount of heat generated (W)			
		Standard model		Ethernet model / Safety communication model	
		LD	ND	LD	ND
Three-phase 200 V class	FR-E820-0008(0.1K)	16	11	17	12
	FR-E820-0015(0.2K)	21	16	22	17
	FR-E820-0030(0.4K)	35	29	36	30
	FR-E820-0050(0.75K)	61	48	62	49
	FR-E820-0080(1.5K)	91	74	92	75
	FR-E820-0110(2.2K)	107	91	108	92
	FR-E820-0175(3.7K)	177	153	178	154
	FR-E820-0240(5.5K)	251	191	252	192
	FR-E820-0330(7.5K)	317	249	318	250
	FR-E820-0470(11K)	426	341	427	342
	FR-E820-0600(15K)	547	414	548	415
	FR-E820-0760(18.5K)	735	600	736	601
	FR-E820-0900(22K)	1063	745	1064	746
Three-phase 400 V class	FR-E840-0016(0.4K)	33	25	34	26
	FR-E840-0026(0.75K)	55	38	56	39
	FR-E840-0040(1.5K)	84	58	85	59
	FR-E840-0060(2.2K)	88	75	89	76
	FR-E840-0095(3.7K)	136	112	137	113
	FR-E840-0120(5.5K)	223	136	224	137
	FR-E840-0170(7.5K)	299	197	300	198
	FR-E840-0230(11K)	410	239	411	240
	FR-E840-0300(15K)	486	321	487	322
	FR-E840-0380(18.5K)	510	348	511	349
	FR-E840-0440(22K)	589	401	590	402
Single-phase 200 V class	FR-E820S-0008(0.1K)	—	11	—	12
	FR-E820S-0015(0.2K)	—	17	—	18
	FR-E820S-0030(0.4K)	—	32	—	33
	FR-E820S-0050(0.75K)	—	49	—	50
	FR-E820S-0080(1.5K)	—	80	—	81
	FR-E820S-0110(2.2K)	—	95	—	96

NOTE

- The figures indicate the amount of heat generated when the output current is the rated current, power supply voltage is 220 V (200 V class) or 440 V (400 V class), and the carrier frequency is 1 kHz.

◆ Installing the heat sink outside the enclosure

When the heat sink is installed outside the enclosure, the amount of heat generated by the inverter unit is shown in the following table.

Voltage	Inverter model	Amount of heat generated (W)							
		Standard model				Ethernet model / Safety communication model			
		Heat sink section (outside of enclosure)		Control section (inside of enclosure)		Heat sink section (outside of enclosure)		Control section (inside of enclosure)	
		LD	ND	LD	ND	LD	ND	LD	ND
Three-phase 200 V class	FR-E820-0080(1.5K)	63.7	51.8	27.3	22.2	63.7	51.8	28.3	23.2
	FR-E820-0110(2.2K)	74.9	63.7	32.1	27.3	74.9	63.7	33.1	28.3
	FR-E820-0175(3.7K)	123.9	107.1	53.1	45.9	123.9	107.1	54.1	46.9
	FR-E820-0240(5.5K)	175.7	133.7	75.3	57.3	175.7	133.7	76.3	58.3
	FR-E820-0330(7.5K)	221.9	174.3	95.1	74.7	221.9	174.3	96.1	75.7
Three-phase 400 V class	FR-E840-0040(1.5K)	80.5	56.7	34.5	24.3	80.5	56.7	35.5	25.3
	FR-E840-0060(2.2K)	95.2	82.6	40.8	35.4	95.2	82.6	41.8	36.4
	FR-E840-0095(3.7K)	142.8	120.4	61.2	51.6	142.8	120.4	62.2	52.6
	FR-E840-0120(5.5K)	241.5	156.8	103.5	67.2	241.5	156.8	104.5	68.2
	FR-E840-0170(7.5K)	333.2	231.0	142.8	99.0	333.2	231.0	143.8	100.0
Single-phase 200 V class	FR-E820S-0080(1.5K)	—	56.0	—	24.0	—	56.0	—	25.0
	FR-E820S-0110(2.2K)	—	66.5	—	28.5	—	66.5	—	29.5

NOTE

- The figures indicate the amount of heat generated when the output current is the rated current, power supply voltage is 220 V (200 V class) or 440 V (400 V class), and the carrier frequency is 1 kHz (200 V class) or 14.5 kHz (400 V class).
- When the heat sink is installed outside the enclosure, the FR-E8CN panel through attachment option is required.

2.3.3 Output current reduction when the surrounding air temperature is between 50°C and 60°C

When the surrounding air temperature is between 50°C and 60°C, reduce the rated output current as shown in the following table.

Voltage	Inverter model	Output current reduction ratio (%/°C) (carrier frequency: 1 kHz)		Output current reduction ratio (%/°C) (carrier frequency: 2 to 14.5 kHz)	
		LD	ND	LD	ND
Three-phase 200 V class	FR-E820-0008(0.1K)	2.0	1.0	2.0	1.5
	FR-E820-0015(0.2K)	2.0	1.0	2.0	1.5
	FR-E820-0030(0.4K)	2.0	1.0	2.0	1.5
	FR-E820-0050(0.75K)	2.0	1.0	2.0	1.5
	FR-E820-0080(1.5K)	1.5	1.0	2.5	2.5
	FR-E820-0110(2.2K)	1.5	1.0	2.5	2.5
	FR-E820-0175(3.7K)	1.5	1.0	2.5	2.5
	FR-E820-0240(5.5K)	1.5	1.0	2.0	2.0
	FR-E820-0330(7.5K)	1.5	1.0	2.0	2.0
Three-phase 400 V class	FR-E840-0016(0.4K)	2.5	1.0	2.0	1.0
	FR-E840-0026(0.75K)	2.5	1.0	2.0	1.0
	FR-E840-0040(1.5K)	1.5	1.0	3.0	3.0
	FR-E840-0060(2.2K)	1.5	1.0	3.0	3.0
	FR-E840-0095(3.7K)	1.5	1.0	3.0	3.0
	FR-E840-0120(5.5K)	1.0	1.0	3.0	3.0
	FR-E840-0170(7.5K)	1.0	1.0	3.0	3.0

NOTE

- Do not use the inverter in an environment with the surrounding air temperature exceeding 60°C.
- [Calculation example] When the FR-E820-0080(1.5K) inverter is used with the ND rating in an environment with the surrounding air temperature of 55°C and the carrier frequency of 1 kHz, the output current reduction ratio is 1.0%. The rated output current after the reduction is 7.6 A against the rated output current 8.0 A for the ND rating according to the reduction using the following formula: output current reduction ratio 1.0% × (55°C - 50°C) = 5%.

2.3.4 Standby power consumption by the inverter

The following table shows the standby power consumption during a stop.

Voltage	Inverter model	Standby power consumption (W)	
		Light duty	Heavy duty
Three-phase 200 V class	FR-E820-0008(0.1K)	4.3	11.0
	FR-E820-0015(0.2K)	4.3	11.0
	FR-E820-0030(0.4K)	4.3	11.5
	FR-E820-0050(0.75K)	4.3	11.6
	FR-E820-0080(1.5K)	4.4	13.6
	FR-E820-0110(2.2K)	4.5	13.8
	FR-E820-0175(3.7K)	4.9	14.4
	FR-E820-0240(5.5K)	7.9	22.0
	FR-E820-0330(7.5K)	7.6	22.1
Three-phase 400 V class	FR-E840-0016(0.4K)	6.8	14.3
	FR-E840-0026(0.75K)	6.8	14.2
	FR-E840-0040(1.5K)	7.0	16.1
	FR-E840-0060(2.2K)	9.6	17.3
	FR-E840-0095(3.7K)	9.9	17.5
	FR-E840-0120(5.5K)	10.0	22.2
	FR-E840-0170(7.5K)	10.1	22.2

NOTE

- Operation of the inverter alone is assumed for the standby power consumption with the light load.
- Operation of the inverter, FR-PU07, fan, and a plug-in option is assumed for the standby power consumption with the heavy load.

2.3.5 Cooling system types for inverter enclosure

From the enclosure that contains the inverter, the heat of the inverter and other equipment (transformers, lamps, resistors, etc.) and the incoming heat such as direct sunlight must be dissipated to keep the in-enclosure temperature lower than the permissible temperatures of the in-enclosure equipment including the inverter.

The cooling systems are classified as follows in terms of the cooling calculation method.

- Cooling by natural heat dissipation from the enclosure surface (totally enclosed type)
- Cooling by heat sink (aluminum fin, etc.)
- Cooling by ventilation (forced ventilation type, pipe ventilation type)

- Cooling by heat exchanger or cooler (heat pipe, cooler, etc.)

Cooling system		Enclosure structure	Comment
Natural	Natural ventilation (enclosed type / open type)	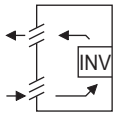	This system is low in cost and generally used, but the enclosure size increases as the inverter capacity increases. This system is for relatively small capacities.
	Natural ventilation (totally enclosed type)	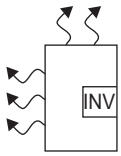	Being a totally enclosed type, this system is the most appropriate for hostile environment having dust, dirt, oil mist, etc. The enclosure size increases depending on the inverter capacity.
Forced air	Heat sink cooling	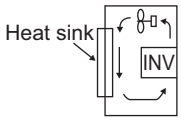	This system has restrictions on the heat sink mounting position and area. This system is for relatively small capacities.
	Forced ventilation	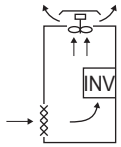	This system is for general indoor installation. This is appropriate for enclosure downsizing and cost reduction, and often used.
	Heat pipe	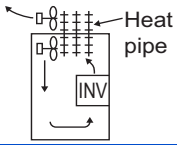	This system is a totally enclosed type, and is appropriate for enclosure downsizing.

2.3.6 Inverter installation

◆ Inverter placement

FR-E820-0175(3.7K) or lower
FR-E840-0016(0.4K) to 0170(7.5K)
FR-E820S-0008(0.1K) to 0110(2.2K)

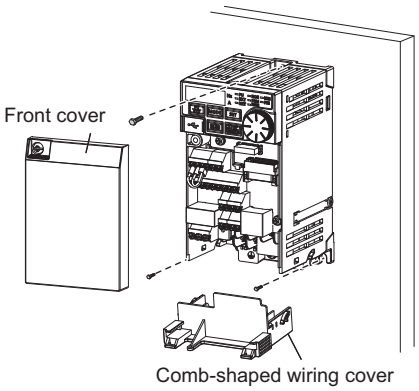

FR-E820-0240(5.5K) or higher
FR-E840-0230(11K) or higher

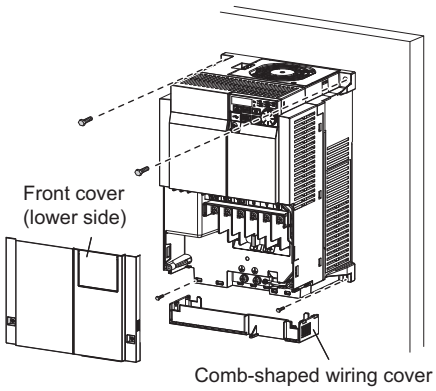

- Remove the front cover (or the lower front cover) and wiring cover to fix the inverter.
- Install the inverter on a strong surface securely with screws.
- Leave enough clearances and take cooling measures.
- Avoid places where the inverter is subjected to direct sunlight, high temperature and high humidity.
- Install the inverter on a nonflammable wall surface.
- When encasing multiple inverters in an enclosure, install them in parallel as a cooling measure.

- For heat dissipation and maintenance, keep clearance between the inverter and the other devices or enclosure surface. The clearance below the inverter is required as a wiring space, and the clearance above the inverter is required as a heat dissipation space.

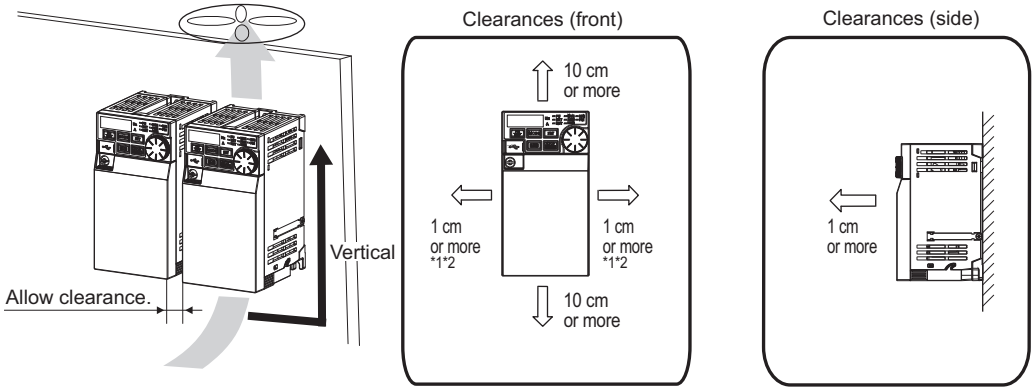

*1 When using the inverters at the surrounding air temperature of 40°C or less, the inverters can be installed closely attached (0 cm clearance).
*2 A clearance of 5 cm or more is required for the FR-E820-0470(11K) or higher and the FR-E840-0230(11K) or higher.

- When tightening screws into the upper mounting holes, tilt the screwdriver seven to ten degrees (FR-E820-0008(0.1K) to 0050(0.75K), and FR-E820S-0030(0.4K) or lower)

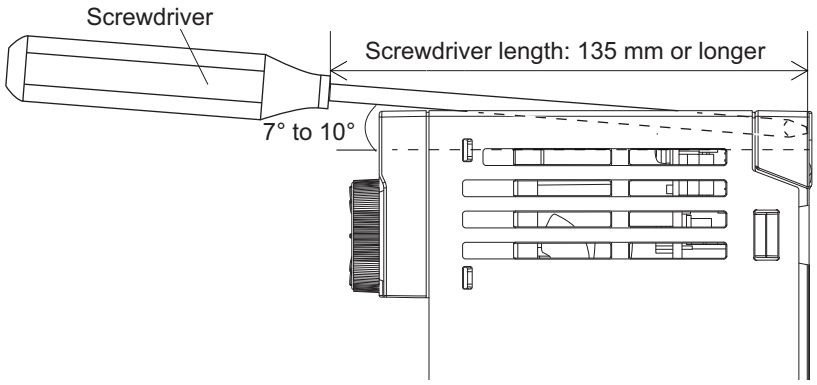

- When designing or building an enclosure for the inverter, carefully consider influencing factors such as heat generation of the contained devices and the operating environment.

◆ Installation orientation of the inverter

Install the inverter on a wall as specified. Do not mount it horizontally or in any other way.

◆ Above the inverter

Heat is blown up from inside the inverter by the small fan built in the unit. Any equipment placed above the inverter should be heat resistant.

◆ Arrangement of multiple inverters

When multiple inverters are placed in the same enclosure, generally arrange them horizontally as shown in the figure (a). When it is inevitable to arrange them vertically to minimize space, take such measures as to provide guides between the inverters since heat generated in the inverters in bottom row can increase the temperatures in the inverters in top row, causing inverter failures.

When installing multiple inverters, fully take measures to prevent the surrounding air temperature of the inverter from being higher than the permissible value by providing ventilation or increasing the enclosure size.

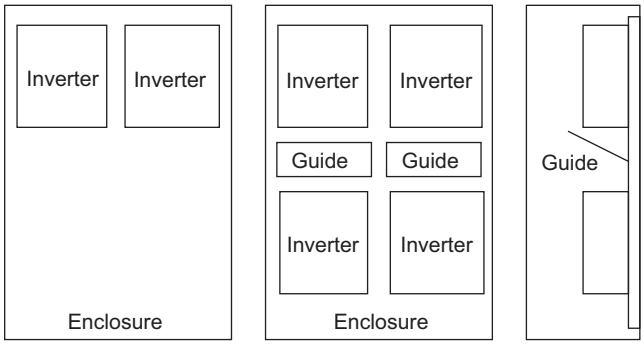

(a) Horizontal arrangement (b) Vertical arrangement

Arrangement of multiple inverters

◆ Arrangement of the ventilation fan and inverter

Heat generated in the inverter is blown up from the bottom of the unit as warm air by the cooling fan. When installing a ventilation fan for that heat, determine the place of ventilation fan installation after fully considering an air flow. (Air passes through areas of low resistance. Make an airway and airflow plates to expose the inverter to cool air.)

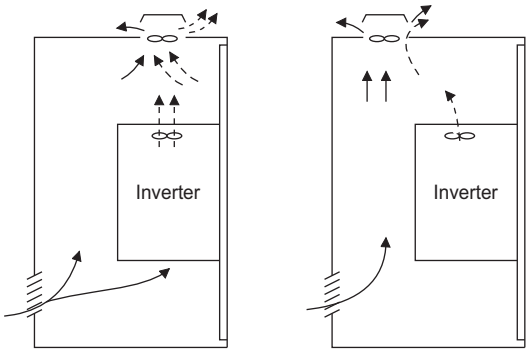

<Good example> <Bad example>

Arrangement of the ventilation fan and inverter

2.4 Terminal connection diagrams

◆ Standard model (sink logic)

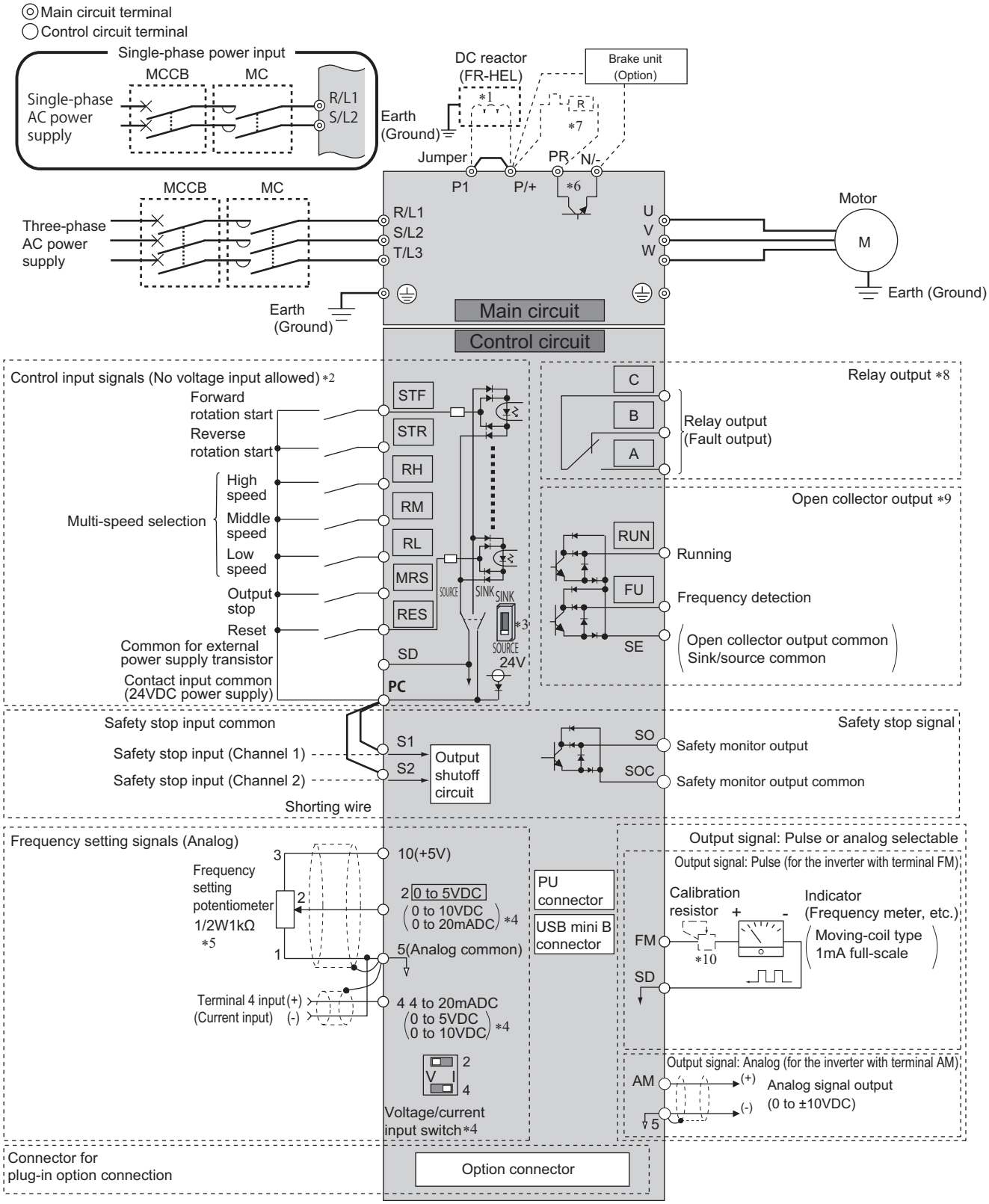

*1 Remove the jumper between P1 and P/+ to connect the DC reactor.

*2 The function of these terminals can be changed using the Input terminal function selection (**Pr.178 to Pr.184**). (Refer to the FR-E800 Instruction Manual (Function).)

*3 The initial setting varies depending on the specification.

*4 Terminal input specifications can be changed by analog input specification switchover (**Pr.73, Pr.267**). To input voltage, set the voltage/current input selection switch to "V". To input current, set the switch to "I". The initial setting varies depending on the specification. (Refer to the FR-E800 Instruction Manual (Function).)

*5 It is recommended to use 2 W 1 kΩ when the frequency setting signal is changed frequently.

*6 The FR-E820-0008(0.1K), FR-E820-0015(0.2K), FR-E820S-0008(0.1K), and FR-E820S-0015(0.2K) are not equipped with brake transistors.

*7 Brake resistor (FR-ABR, MRS, MYS)
Install a thermal relay to prevent overheating and damage of brake resistors. (A brake resistor cannot be connected to the FR-E820-0008(0.1K), FR-E820-0015(0.2K), FR-E820S-0008(0.1K), and FR-E820S-0015(0.2K).) (Refer to page 89.)

*8 The function of these terminals can be changed using the **Pr.192 ABC terminal function selection**.

*9 The function of these terminals can be changed using the Output terminal function selection (**Pr.190 or Pr.191**). (Refer to the FR-E800 Instruction Manual (Function).)

*10 Not required when calibrating the scale with the operation panel.

NOTE

- To prevent a malfunction due to noise, keep the signal cables 10 cm or more away from the power cables. Also, keep the cables of the main circuit for input and output separated.
- After wiring, wire offcuts must not be left in the inverter.
  Wire offcuts can cause a fault, failure or malfunction. Always keep the inverter clean.
  When drilling mounting holes in an enclosure etc., take caution not to allow chips and other foreign matter to enter the inverter.
- Set the switches of the voltage/current input selection switch assembly correctly. Incorrect setting may cause a fault, failure or malfunction.
- The output of the single-phase power input model is three-phase 200 V.

◆ Standard model (source logic)

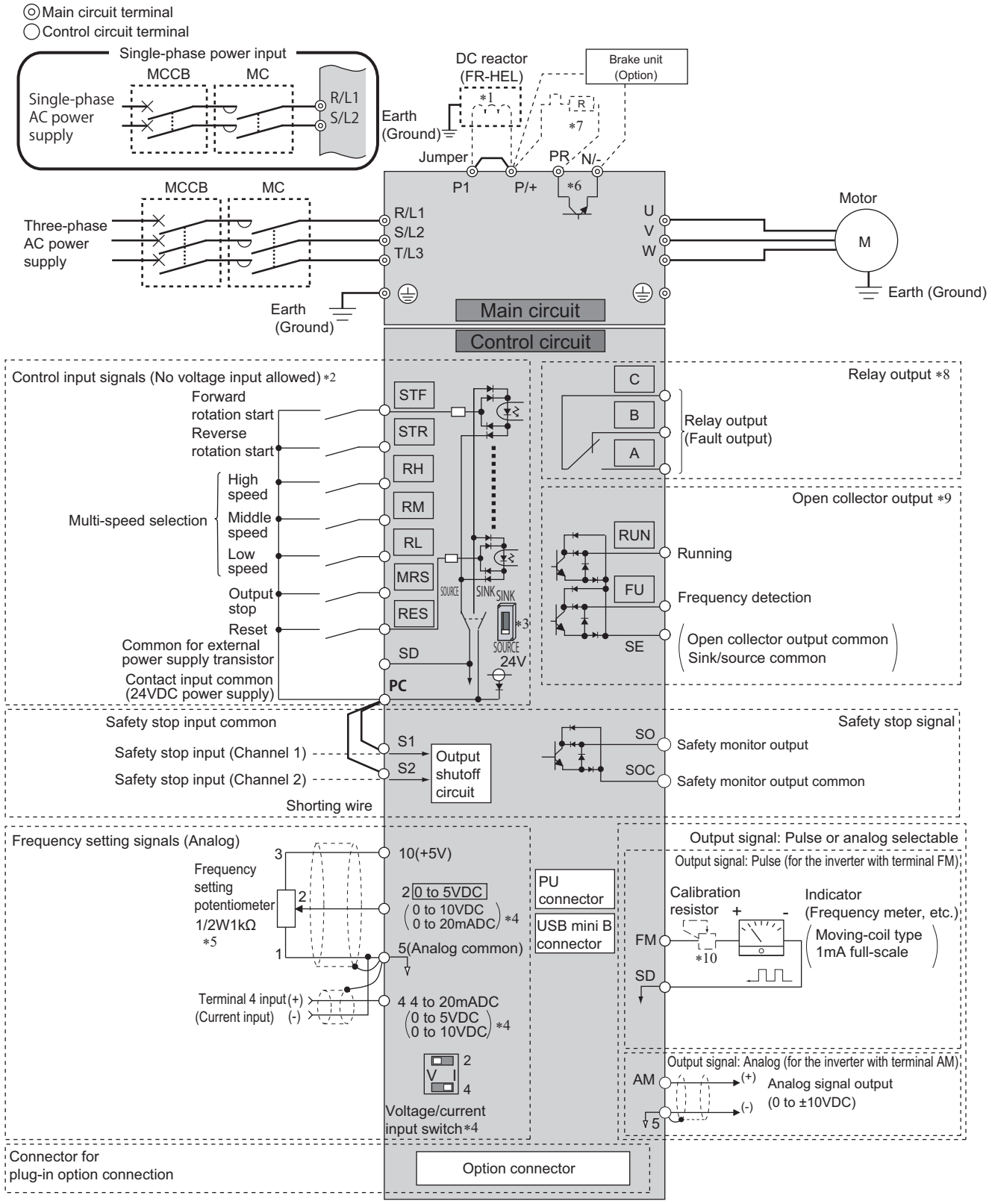

*1 Remove the jumper between P1 and P/+ to connect the DC reactor.

*2 The function of these terminals can be changed using the Input terminal function selection (**Pr.178 to Pr.184**). (Refer to the FR-E800 Instruction Manual (Function).)

*3 The initial setting varies depending on the specification.

*4 Terminal input specifications can be changed by analog input specification switchover (**Pr.73, Pr.267**). To input voltage, set the voltage/current input selection switch to "V". To input current, set the switch to "I". The initial setting varies depending on the specification. (Refer to the FR-E800 Instruction Manual (Function).)

*5 It is recommended to use 2 W 1 kΩ when the frequency setting signal is changed frequently.

*6 The FR-E820-0008(0.1K), FR-E820-0015(0.2K), FR-E820S-0008(0.1K), and FR-E820S-0015(0.2K) are not equipped with brake transistors.

*7 Brake resistor (FR-ABR, MRS, MYS)
Install a thermal relay to prevent overheating and damage of brake resistors. (A brake resistor cannot be connected to the FR-E820-0008(0.1K), FR-E820-0015(0.2K), FR-E820S-0008(0.1K), and FR-E820S-0015(0.2K).) (Refer to page 89.)

*8 The function of these terminals can be changed using the **Pr.192 ABC terminal function selection**.

*9 The function of these terminals can be changed using the Output terminal function selection (**Pr.190 or Pr.191**). (Refer to the FR-E800 Instruction Manual (Function).)

*10 Not required when calibrating the scale with the operation panel.

NOTE

- To prevent a malfunction due to noise, keep the signal cables 10 cm or more away from the power cables. Also, keep the cables of the main circuit for input and output separated.
- After wiring, wire offcuts must not be left in the inverter.
  Wire offcuts can cause a fault, failure or malfunction. Always keep the inverter clean.
  When drilling mounting holes in an enclosure etc., take caution not to allow chips and other foreign matter to enter the inverter.
- Set the switches of the voltage/current input selection switch assembly correctly. Incorrect setting may cause a fault, failure or malfunction.
- The output of the single-phase power input model is three-phase 200 V.

◆ Ethernet model (sink logic)

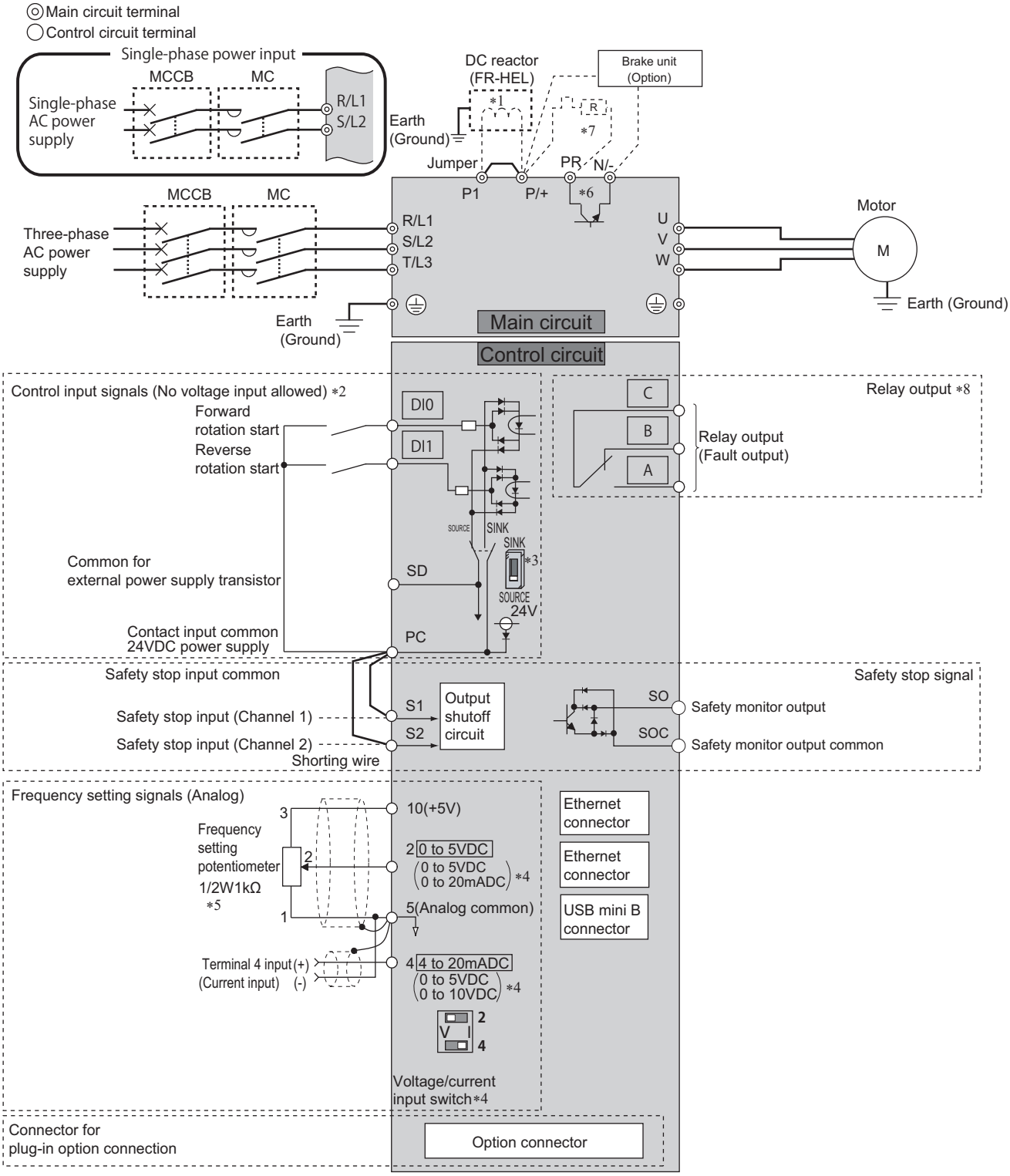

*1 Remove the jumper between P1 and P/+ to connect the DC reactor.

*2 The function of these terminals can be changed using the Input terminal function selection (**Pr.178 to Pr.179**). (Refer to the FR-E800 Instruction Manual (Function).)

*3 The initial setting varies depending on the specification.

*4 Terminal input specifications can be changed by analog input specification switchover (**Pr.73, Pr.267**). To input voltage, set the voltage/current input selection switch to "V". To input current, set the switch to "I". The initial setting varies depending on the specification. (Refer to the FR-E800 Instruction Manual (Function).)

*5 It is recommended to use 2 W 1 kΩ when the frequency setting signal is changed frequently.

*6 The FR-E820-0008(0.1K), FR-E820-0015(0.2K), FR-E820S-0008(0.1K), and FR-E820S-0015(0.2K) are not equipped with brake transistors.

*7 Brake resistor (FR-ABR, MRS, MYS)
Install a thermal relay to prevent overheating and damage of brake resistors. (A brake resistor cannot be connected to the FR-E820-0008(0.1K), FR-E820-0015(0.2K), FR-E820S-0008(0.1K), and FR-E820S-0015(0.2K).) (Refer to page 89.)

*8 The function of these terminals can be changed using the **Pr.192 ABC terminal function selection**.

NOTE

- To prevent a malfunction due to noise, keep the signal cables 10 cm or more away from the power cables. Also, keep the cables of the main circuit for input and output separated.
- After wiring, wire offcuts must not be left in the inverter.
  Wire offcuts can cause a fault, failure or malfunction. Always keep the inverter clean.
  When drilling mounting holes in an enclosure etc., take caution not to allow chips and other foreign matter to enter the inverter.
- Set the switches of the voltage/current input selection switch assembly correctly. Incorrect setting may cause a fault, failure or malfunction.
- The output of the single-phase power input model is three-phase 200 V.

◆ Ethernet model (source logic)

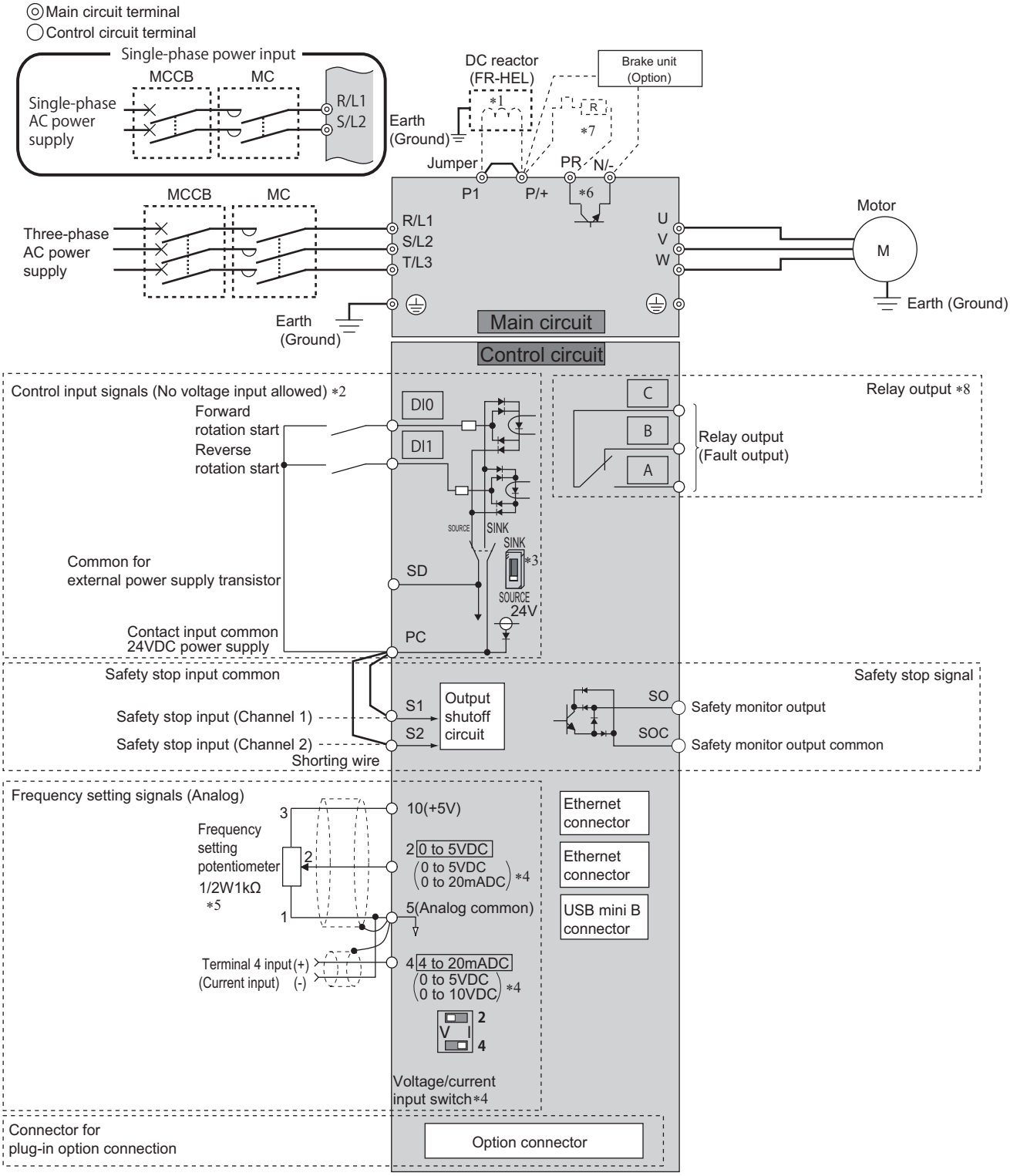

*1 Remove the jumper between P1 and P/+ to connect the DC reactor.

*2 The function of these terminals can be changed using the Input terminal function selection (**Pr.178 to Pr.179**). (Refer to the FR-E800 Instruction Manual (Function).)

*3 The initial setting varies depending on the specification.

*4 Terminal input specifications can be changed by analog input specification switchover (**Pr.73, Pr.267**). To input voltage, set the voltage/current input selection switch to "V". To input current, set the switch to "I". The initial setting varies depending on the specification. (Refer to the FR-E800 Instruction Manual (Function).)

*5 It is recommended to use 2 W 1 kΩ when the frequency setting signal is changed frequently.

*6 The FR-E820-0008(0.1K), FR-E820-0015(0.2K), FR-E820S-0008(0.1K), and FR-E820S-0015(0.2K) are not equipped with brake transistors.

*7 Brake resistor (FR-ABR, MRS, MYS)
Install a thermal relay to prevent overheating and damage of brake resistors. (A brake resistor cannot be connected to the FR-E820-0008(0.1K), FR-E820-0015(0.2K), FR-E820S-0008(0.1K), and FR-E820S-0015(0.2K).) (Refer to page 89.)

*8 The function of these terminals can be changed using the **Pr.192 ABC terminal function selection**.

NOTE

- To prevent a malfunction due to noise, keep the signal cables 10 cm or more away from the power cables. Also, keep the cables of the main circuit for input and output separated.
- After wiring, wire offcuts must not be left in the inverter.
  Wire offcuts can cause a fault, failure or malfunction. Always keep the inverter clean.
  When drilling mounting holes in an enclosure etc., take caution not to allow chips and other foreign matter to enter the inverter.
- Set the switches of the voltage/current input selection switch assembly correctly. Incorrect setting may cause a fault, failure or malfunction.
- The output of the single-phase power input model is three-phase 200 V.

◆ Safety communication model (source logic)

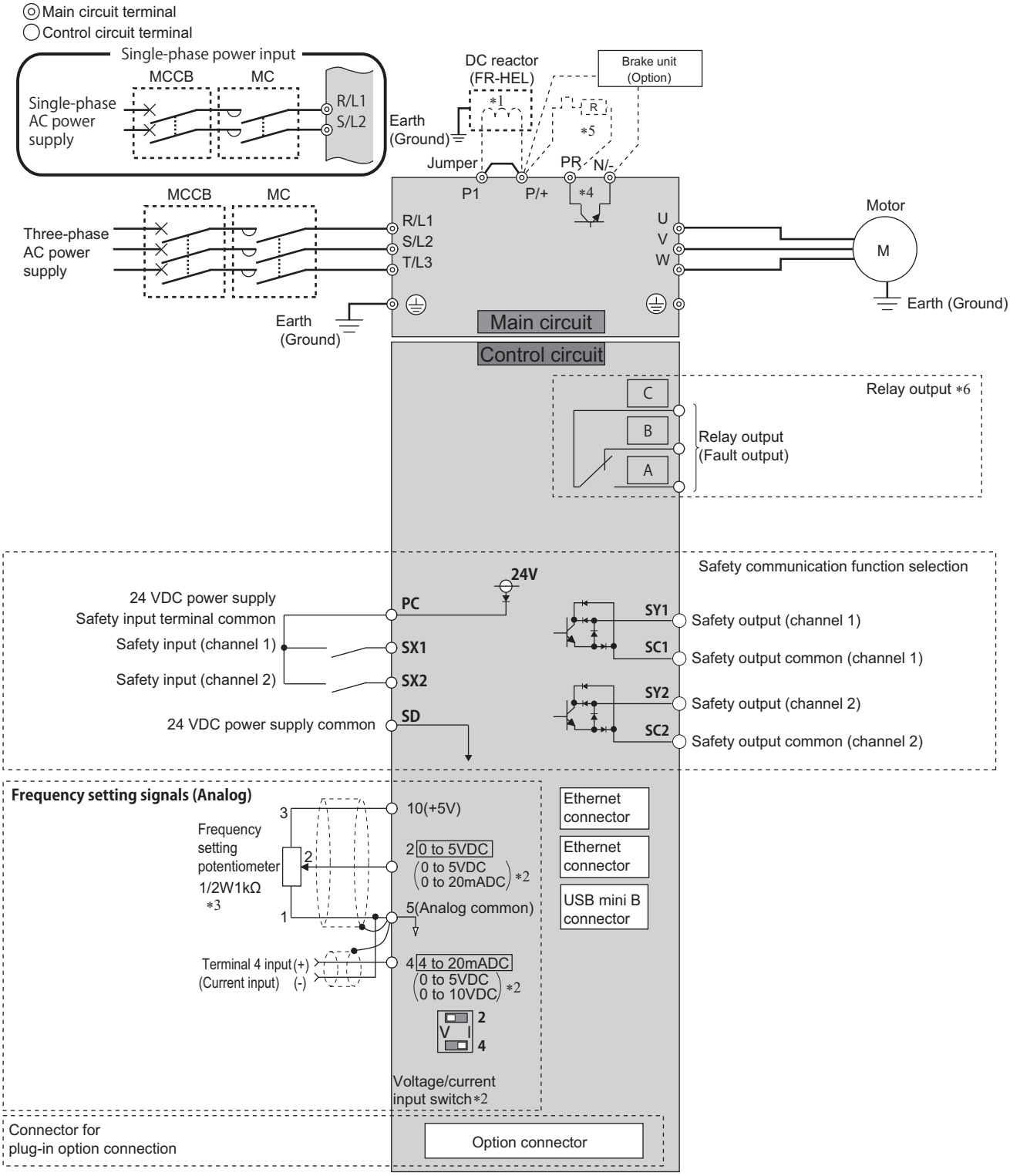

*1 Remove the jumper between P1 and P/+ to connect the DC reactor.

*2 Terminal input specifications can be changed by analog input specification switchover (**Pr.73, Pr.267**). To input voltage, set the voltage/current input selection switch to "V". To input current, set the switch to "I". The initial setting varies depending on the specification. (Refer to the FR-E800 Instruction Manual (Function).)

*3 It is recommended to use 2 W 1 kΩ when the frequency setting signal is changed frequently.

*4 The FR-E820-0008(0.1K), FR-E820-0015(0.2K), FR-E820S-0008(0.1K), and FR-E820S-0015(0.2K) are not equipped with brake transistors.

*5 Brake resistor (FR-ABR, MRS, MYS)
Install a thermal relay to prevent overheating and damage of brake resistors. (A brake resistor cannot be connected to the FR-E820-0008(0.1K), FR-E820-0015(0.2K), FR-E820S-0008(0.1K), and FR-E820S-0015(0.2K).) (Refer to page 89.)

*6 The function of these terminals can be changed using the **Pr.192 ABC terminal function selection**.

NOTE

- To prevent a malfunction due to noise, keep the signal cables 10 cm or more away from the power cables. Also, keep the cables of the main circuit for input and output separated.
- After wiring, wire offcuts must not be left in the inverter.
  Wire offcuts can cause a fault, failure or malfunction. Always keep the inverter clean.
  When drilling mounting holes in an enclosure etc., take caution not to allow chips and other foreign matter to enter the inverter.
- Set the switches of the voltage/current input selection switch assembly correctly. Incorrect setting may cause a fault, failure or malfunction.
- The output of the single-phase power input model is three-phase 200 V.

2.5 Main circuit terminals

2.5.1 Details on the main circuit terminals

Terminal symbol	Terminal name	Terminal function description	Refer to page
R/L1, S/L2, T/L3[*1]	AC power input	Connect these terminals to the commercial power supply.	—
U, V, W	Inverter output	Connect these terminals to a three-phase squirrel cage motor or a PM motor.	—
P/+, PR	Brake resistor connection for	Connect an optional brake resistor (FR-ABR, MRS, or MYS model) across terminals P/+ and PR. (A brake resistor cannot be connected to the FR-E820-0008(0.1K), FR-E820-0015(0.2K), FR-E820S-0008(0.1K), and FR-E820S-0015(0.2K).)	89
P/+, N/-	Brake unit connection	Connect the brake unit (FR-BU2, FR-BU, or BU), power regeneration common converter (FR-CV), or multifunction regeneration converter (FR-XC in power regeneration mode) to these terminals.	93
P/+, P1	DC reactor connection for	Remove the jumper across terminals P/+ and P1, and connect a DC reactor. When a DC reactor is not connected, the jumper across terminals P/+ and P1 should not be removed.	97
⏚	Earth (ground)	For earthing (grounding) the inverter chassis. Be sure to earth (ground) the inverter.	58

*1 Terminal T/L3 is not available for the single-phase power input model.

2.5.2 Main circuit terminal layout and wiring to power supply and motor

◆ Three-phase 200/400 V class

FR-E820-0008(0.1K) to 0050(0.75K)

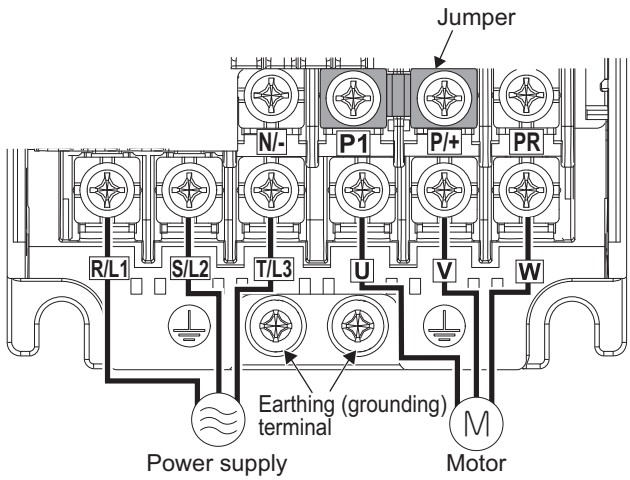

FR-E820-0080(1.5K) to 0175(3.7K)
FR-E840-0016(0.4K) to 0095(3.7K)

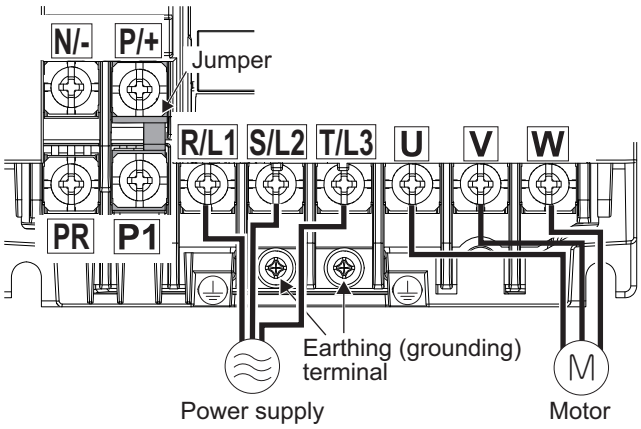

FR-E820-0240(5.5K), 0330(7.5K)

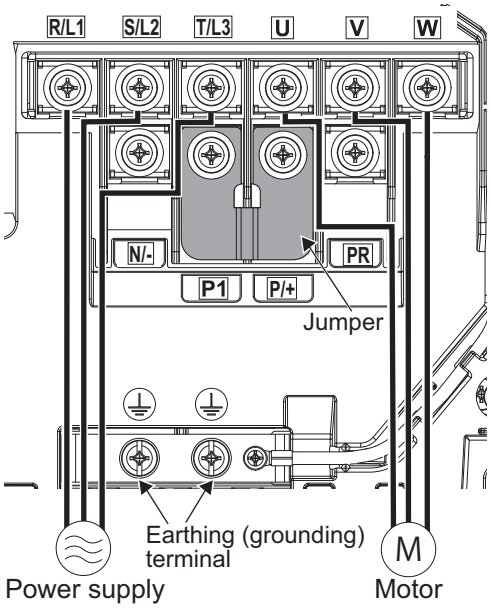

FR-E840-0120(5.5K), 0170(7.5K)

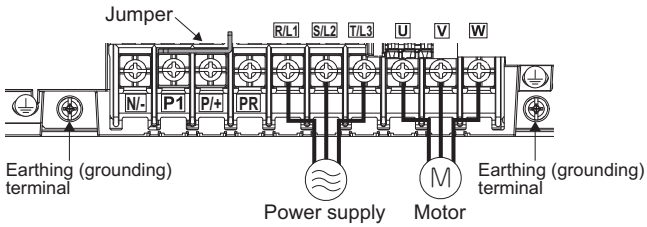

FR-E820-0470(11K), 0600(15K)

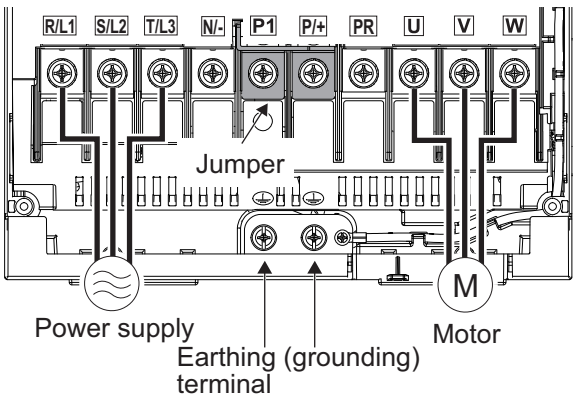

FR-E840-0230(11K), 0300(15K)

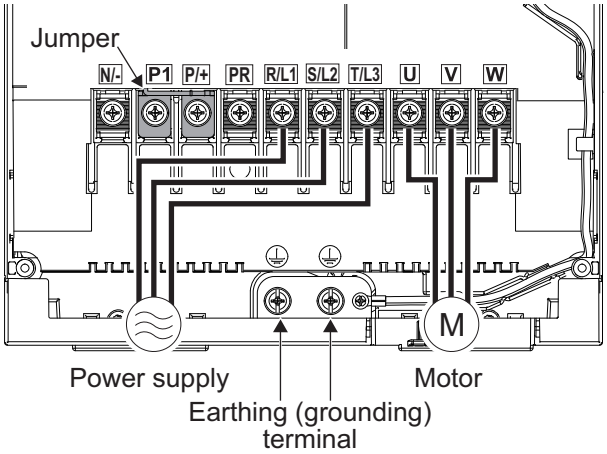

FR-E820-0760(18.5K), 0900(22K)
FR-E840-0380(18.5K), 0440(22K)

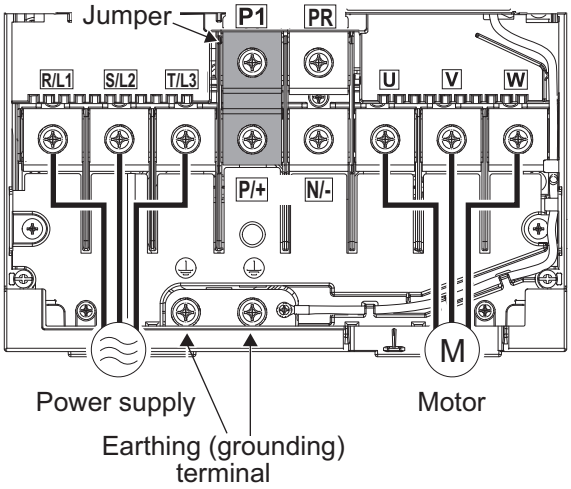

◆ Single-phase 200 V class

FR-E820S-0008(0.1K) to FR-E820S-0030(0.4K)

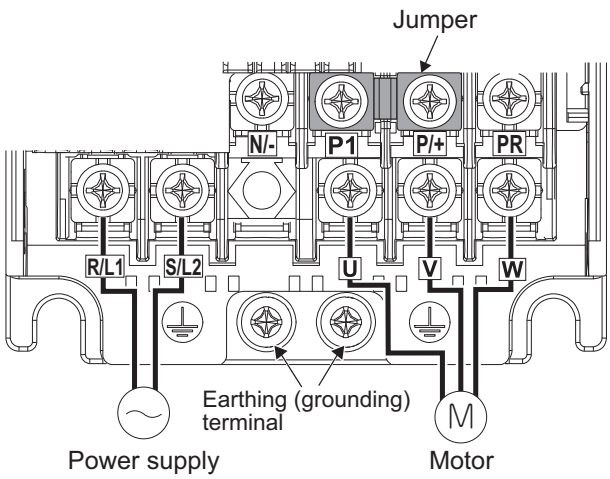

FR-E820S-0050(0.75K) to 0110(2.2K)

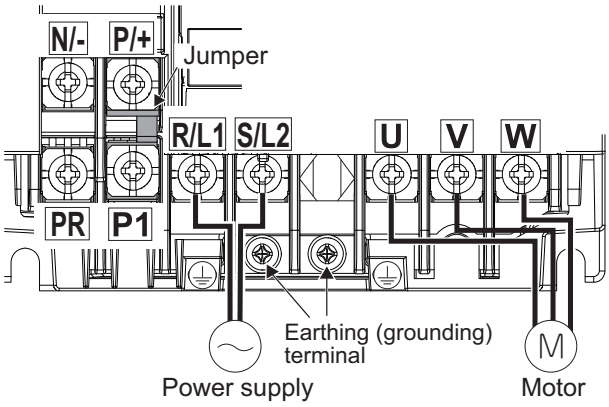

NOTE

- Make sure the power cables are connected to the R/L1, S/L2, and T/L3. (Phase need not be matched.) Never connect the power cable to the U, V, and W of the inverter. Doing so will damage the inverter.
- Connect the motor to U, V, and W. (The phases must be matched.)

■ Handling of the wiring cover

(FR-E820-0470(11K) to 0900(22K), FR-E840-0230(11K) to 0440(22K))

For the hook of the wiring cover, cut off the necessary parts using a pair of needle-nose pliers etc.

NOTE

- Cut off the same number of lugs as wires. If parts where no wire is put through have been cut off (10 mm or more), protective structure (IEC 60529) becomes an open type (IP00).

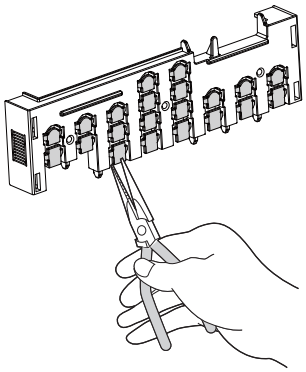

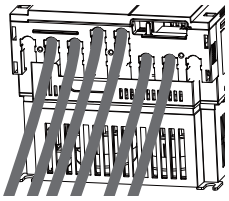

2.5.3 Applicable cables and wiring length

◆ For the ND rating

- Three-phase 200 V class (220 V input power supply, without a power factor improving AC or DC reactor)

Applicable inverter model FR-E820-[]	Terminal screw size*4	Tightening torque (N·m)	Crimp terminal		Cable gauge								
					HIV cables, etc. (mm^2)*1				AWG/MCM*2		PVC cables, etc. (mm^2)*3		
			R/L1, S/L2, T/L3	U, V, W	R/L1, S/L2, T/L3	U, V, W	P/+, P1	Earthing (grounding) cable	R/L1, S/L2, T/L3	U, V, W	R/L1, S/L2, T/L3	U, V, W	Earthing (grounding) cable
0008(0.1K) to 0050(0.75K)	M3.5	1.2	2-3.5	2-3.5	2	2*5	2	2	14	14*5	2.5	2.5*5	2.5
0080(1.5K), 0110(2.2K)	M4 (M3.5)	1.5	2-4	2-4	2	2	2	2	14	14	2.5	2.5	2.5
0175(3.7K)	M4 (M3.5)	1.5	5.5-4	5.5-4	3.5	3.5	3.5	3.5	12	12	4	4	4
0240(5.5K)	M5	2.5	5.5-5	5.5-5	5.5	5.5	5.5	5.5	10	10	6	6	6
0330(7.5K)	M5	2.5	14-5	8-5	14	8	8	5.5	6	8	16	10	6
0470(11K)	M5	2.5	14-5	14-5	14	14	14	8	6	6	16	16	16
0600(15K)	M6 (M5)	4.4	22-6	22-6	22	22	22	14	4	4	25	25	16
0760(18.5K)	M8 (M6)	7.8	38-8	22-8	38	22	38	14	2	4	35	25	25
0900(22K)	M8 (M6)	7.8	38-8	38-8	38	38	38	22	2	2	35	35	25

- Three-phase 200 V class (220 V input power supply, with a power factor improving AC or DC reactor)

Applicable inverter model FR-E820-[]	Terminal screw size*4	Tightening torque (N·m)	Crimp terminal		Cable gauge								
					HIV cables, etc. (mm^2)*1				AWG/MCM*2		PVC cables, etc. (mm^2)*3		
			R/L1, S/L2, T/L3	U, V, W	R/L1, S/L2, T/L3	U, V, W	P/+, P1	Earthing (grounding) cable	R/L1, S/L2, T/L3	U, V, W	R/L1, S/L2, T/L3	U, V, W	Earthing (grounding) cable
0008(0.1K) to 0050(0.75K)	M3.5	1.2	2-3.5	2-3.5	2	2*5	2	2	14	14*5	2.5	2.5*5	2.5
0080(1.5K), 0110(2.2K)	M4 (M3.5)	1.5	2-4	2-4	2	2	2	2	14	14	2.5	2.5	2.5
0175(3.7K)	M4 (M3.5)	1.5	5.5-4	5.5-4	3.5	3.5	3.5	3.5	12	12	4	4	4
0240(5.5K)	M5	2.5	5.5-5	5.5-5	5.5	5.5	5.5	5.5	10	10	6	6	6
0330(7.5K)	M5	2.5	8-5	8-5	8	8	8	5.5	8	8	10	10	6
0470(11K)	M5	2.5	14-5	14-5	14	14	14	8	6	6	16	16	16
0600(15K)	M6 (M5)	4.4	22-6	22-6	22	22	22	14	4	4	25	25	16
0760(18.5K)	M8 (M6)	7.8	22-8	22-8	22	22	38	14	4	4	25	25	25
0900(22K)	M8 (M6)	7.8	38-8	38-8	38	38	38	22	2	2	35	35	25

- Three-phase 400 V class (440 V input power supply, without a power factor improving AC or DC reactor)

Applicable inverter model FR-E840-[]	Terminal screw size*4	Tightening torque (N·m)	Crimp terminal		Cable gauge								
					HIV cables, etc. (mm^2)*1				AWG/MCM*2		PVC cables, etc. (mm^2)*3		
			R/L1, S/L2, T/L3	U, V, W	R/L1, S/L2, T/L3	U, V, W	P/+, P1	Earthing (grounding) cable	R/L1, S/L2, T/L3	U, V, W	R/L1, S/L2, T/L3	U, V, W	Earthing (grounding) cable
0016(0.4K) to 0095(3.7K)	M4	1.5	2-4	2-4	2	2	2	2	14	14	2.5	2.5	2.5
0120(5.5K)	M4	1.5	5.5-4	2-4	3.5	2	3.5	3.5	12	14	4	2.5	4
0170(7.5K)	M4	1.5	5.5-4	5.5-4	3.5	3.5	3.5	3.5	12	12	4	4	4
0230(11K)	M4	1.5	5.5-4	5.5-4	5.5	5.5	5.5	5.5	10	10	6	6	10
0300(15K)	M5	2.5	8-5	8-5	8	8	8	5.5	8	8	10	10	10
0380(18.5K)	M6	4.4	14-6	8-6	14	8	14	8	6	8	16	10	16
0440(22K)	M6	4.4	14-6	14-6	14	14	22	14	6	6	16	16	16

- Three-phase 400 V class (440 V input power supply, with a power factor improving AC or DC reactor)

Applicable inverter model FR-E840-[]	Terminal screw size*4	Tightening torque (N·m)	Crimp terminal		Cable gauge								
					HIV cables, etc. (mm^2)*1				AWG/MCM*2		PVC cables, etc. (mm^2)*3		
			R/L1, S/L2, T/L3	U, V, W	R/L1, S/L2, T/L3	U, V, W	P/+, P1	Earthing (grounding) cable	R/L1, S/L2, T/L3	U, V, W	R/L1, S/L2, T/L3	U, V, W	Earthing (grounding) cable
0016(0.4K) to 0095(3.7K)	M4	1.5	2-4	2-4	2	2	2	2	14	14	2.5	2.5	2.5
0120(5.5K)	M4	1.5	2-4	2-4	2	2	3.5	2	14	14	2.5	2.5	2.5
0170(7.5K)	M4	1.5	5.5-4	5.5-4	3.5	3.5	3.5	3.5	12	12	4	4	4
0230(11K)	M4	1.5	5.5-4	5.5-4	5.5	5.5	5.5	5.5	10	10	6	6	6
0300(15K)	M5	2.5	8-5	8-5	8	8	8	5.5	8	8	10	10	10
0380(18.5K)	M6	4.4	8-6	8-6	8	8	14	8	8	8	10	10	10
0440(22K)	M6	4.4	14-6	14-6	14	14	22	14	6	6	16	16	16

- Single-phase 200 V class (220 V input power supply, without a power factor improving AC or DC reactor)

Applicable inverter model FR-E820-[]	Terminal screw size*4	Tightening torque (N·m)	Crimp terminal		Cable gauge								
					HIV cables, etc. (mm^2)*1				AWG/MCM*2		PVC cables, etc. (mm^2)*3		
			R/L1, S/L2	U, V, W	R/L1, S/L2	U, V, W	P/+, P1	Earthing (grounding) cable	R/L1, S/L2	U, V, W	R/L1, S/L2	U, V, W	Earthing (grounding) cable
0008(0.1K) to 0030(0.4K)	M3.5	1.2	2-3.5	2-3.5	2	2*5	2	2	14	14*5	2.5	2.5*5	2.5
0050(0.75K), 0080(1.5K)	M4	1.5	2-4	2-4	2	2	2	2	14	14	2.5	2.5	2.5
0110(2.2K)	M4	1.5	5.5-4	2-4	3.5	2	2	2	12	14	4	2.5	2.5

- Single-phase 200 V class (220 V input power supply, with a power factor improving AC or DC reactor)

Applicable inverter model FR-E820-[]	Terminal screw size*4	Tightening torque (N·m)	Crimp terminal		Cable gauge								
					HIV cables, etc. (mm^2)*1				AWG/MCM*2		PVC cables, etc. (mm^2)*3		
			R/L1, S/L2	U, V, W	R/L1, S/L2	U, V, W	P/+, P1	Earthing (grounding) cable	R/L1, S/L2	U, V, W	R/L1, S/L2	U, V, W	Earthing (grounding) cable
0008(0.1K) to 0030(0.4K)	M3.5	1.2	2-3.5	2-3.5	2	2*5	2	2	14	14*5	2.5	2.5*5	2.5
0050(0.75K), 0080(1.5K)	M4	1.5	2-4	2-4	2	2	2	2	14	14	2.5	2.5	2.5
0110(2.2K)	M4	1.5	5.5-4	2-4	3.5	2	2	2	12	14	4	2.5	2.5

*1 The cable size is that of the HIV cable (600 V grade heat-resistant PVC insulated wire) etc. with continuous maximum permissible temperature of 75°C. It assumes a surrounding air temperature of 50°C or lower and the wiring distance of 20 m or shorter.

*2 The cable size is that of the THHW cable with continuous maximum permissible temperature of 75°C. It assumes a surrounding air temperature of 40°C or lower and the wiring distance of 20 m or shorter.
(For the use in the United States or Canada, refer to "Instructions for UL and cUL" in the document enclosed with the product.)

*3 The cable size is that of the PVC cable with continuous maximum permissible temperature of 70°C. It assumes a surrounding air temperature of 40°C or lower and the wiring distance of 20 m or shorter.
(Selection example mainly for use in Europe.)

*4 The screw size for terminals R/L1, S/L2, T/L3, U, V, W, PR, P/+, N/-, and P1, and the earthing (grounding) terminal is shown.
The screw size for earthing (grounding) the FR-E820-0080(1.5K) to 0175(3.7K) or FR-E820-0600(15K) to FR-E820-0900(22K) is indicated in parentheses.

*5 The gauge is 0.75 mm^2 (19 AWG or 18 AWG) for the MM-GKR motor power supply cable (MR-PWS1CBL[]M-A[]-[]).
When the wiring length of the power supply cable for the MM-GKR motor exceeds 10 m, extend the cable using the MR-PWS2CBL03M-A_-L and an HIV wire of 1.25 mm^2 (16 AWG).

◆ For the LD rating

- Three-phase 200 V class (220 V input power supply, without a power factor improving AC or DC reactor)

Applicable inverter model FR-E820-[]	Terminal screw size*4	Tightening torque (N·m)	Crimp terminal		Cable gauge								
					HIV cables, etc. (mm²)*1				AWG/MCM*2		PVC cables, etc. (mm²)*3		
			R/L1, S/L2, T/L3	U, V, W	R/L1, S/L2, T/L3	U, V, W	P/+, P1	Earthing (grounding) cable	R/L1, S/L2, T/L3	U, V, W	R/L1, S/L2, T/L3	U, V, W	Earthing (grounding) cable
0008(0.1K) to 0050(0.75K)	M3.5	1.2	2-3.5	2-3.5	2	2*5	2	2	14	14*5	2.5	2.5*5	2.5
0080(1.5K)	M4 (M3.5)	1.5	2-4	2-4	2	2	2	2	14	14	2.5	2.5	2.5
0110(2.2K)	M4 (M3.5)	1.5	5.5-4	5.5-4	3.5	3.5	3.5	3.5	12	12	4	4	4
0175(3.7K)	M4 (M3.5)	1.5	5.5-4	5.5-4	5.5	5.5	5.5	5.5	10	10	6	6	6
0240(5.5K)	M5	2.5	14-5	5.5-5	14	5.5	14	5.5	6	10	16	6	6
0330(7.5K)	M5	2.5	14-5	14-5	14	14	14	8	6	6	16	16	10
0470(11K)	M5	2.5	22-5	22-5	22	22	22	14	4	4	25	25	16
0600(15K)	M6	4.4	38-6	22-6	38	22	38	14	2	4	35	25	25
0760(18.5K)	M8 (M6)	7.8	38-8	38-8	38	38	38	22	2	2	35	35	25
0900(22K)	M8 (M6)	7.8	60-8	60-8	60	60	60	22	1/0	1/0	50	50	25

- Three-phase 200 V class (220 V input power supply, with a power factor improving AC or DC reactor)

Applicable inverter model FR-E820-[]	Terminal screw size*4	Tightening torque (N·m)	Crimp terminal		Cable gauge								
					HIV cables, etc. (mm²)*4				AWG/MCM*2		PVC cables, etc. (mm²)*3		
			R/L1, S/L2, T/L3	U, V, W	R/L1, S/L2, T/L3	U, V, W	P/+, P1	Earthing (grounding) cable	R/L1, S/L2, T/L3	U, V, W	R/L1, S/L2, T/L3	U, V, W	Earthing (grounding) cable
0008(0.1K) to 0050(0.75K)	M3.5	1.2	2-3.5	2-3.5	2	2*5	2	2	14	14*5	2.5	2.5*5	2.5
0080(1.5K)	M4 (M3.5)	1.5	2-4	2-4	2	2	2	2	14	14	2.5	2.5	2.5
0110(2.2K)	M4 (M3.5)	1.5	5.5-4	5.5-4	3.5	3.5	3.5	3.5	12	12	4	4	4
0175(3.7K)	M4 (M3.5)	1.5	5.5-4	5.5-4	5.5	5.5	5.5	5.5	10	10	6	6	6
0240(5.5K)	M5	2.5	5.5-5	5.5-5	5.5	5.5	14	5.5	10	10	6	6	6
0330(7.5K)	M5	2.5	14-5	14-5	14	14	14	8	6	6	16	16	10
0470(11K)	M5	2.5	22-5	22-5	22	22	22	14	4	4	25	25	16
0600(15K)	M6	4.4	22-6	22-6	22	22	38	14	4	4	25	25	25
0760(18.5K)	M8 (M6)	7.8	38-8	38-8	38	38	38	22	2	2	35	35	25
0900(22K)	M8 (M6)	7.8	60-8	60-8	60	60	60	22	1/0	1/0	50	50	25

- Three-phase 400 V class (440 V input power supply, without a power factor improving AC or DC reactor)

Applicable inverter model FR-E840-[]	Terminal screw size*4	Tightening torque (N·m)	Crimp terminal		Cable gauge								
					HIV cables, etc. (mm²)*4				AWG/MCM*2		PVC cables, etc. (mm²)*3		
			R/L1, S/L2, T/L3	U, V, W	R/L1, S/L2, T/L3	U, V, W	P/+, P1	Earthing (grounding) cable	R/L1, S/L2, T/L3	U, V, W	R/L1, S/L2, T/L3	U, V, W	Earthing (grounding) cable
0016(0.4K) to 0060(2.2K)	M4	1.5	2-4	2-4	2	2	2	2	14	14	2.5	2.5	2.5
0095(3.7K)	M4	1.5	2-4	2-4	2	2	3.5	2	12	14	2.5	2.5	2.5
0120(5.5K)	M4	1.5	5.5-4	5.5-4	3.5	3.5	3.5	3.5	12	12	4	4	4
0170(7.5K)	M4	1.5	5.5-4	5.5-4	5.5	5.5	5.5	5.5	10	10	6	6	6
0230(11K)	M4	1.5	8-4	5.5-4	8	5.5	8	5.5	8	10	10	6	10
0300(15K)	M5	2.5	14-5	8-5	14	8	14	8	6	8	16	10	16
0380(18.5K)	M6	4.4	14-6	14-6	14	14	22	14	6	6	16	16	16
0440(22K)	M6	4.4	22-6	22-6	22	22	22	14	4	4	25	25	16

- Three-phase 400 V class (440 V input power supply, with a power factor improving AC or DC reactor)

Applicable inverter model FR-E840-[]	Terminal screw size*4	Tightening torque (N·m)	Crimp terminal		Cable gauge								
					HIV cables, etc. (mm^2)*4				AWG/MCM*2		PVC cables, etc. (mm^2)*3		
			R/L1, S/L2, T/L3	U, V, W	R/L1, S/L2, T/L3	U, V, W	P/+, P1	Earthing (grounding) cable	R/L1, S/L2, T/L3	U, V, W	R/L1, S/L2, T/L3	U, V, W	Earthing (grounding) cable
0016(0.4K) to 0060(2.2K)	M4	1.5	2-4	2-4	2	2	2	2	14	14	2.5	2.5	2.5
0095(3.7K)	M4	1.5	2-4	2-4	2	2	3.5	2	14	14	2.5	2.5	2.5
0120(5.5K)	M4	1.5	5.5-4	5.5-4	3.5	3.5	3.5	3.5	12	12	4	4	4
0170(7.5K)	M4	1.5	5.5-4	5.5-4	5.5	5.5	5.5	5.5	10	10	6	6	6
0230(11K)	M4	1.5	5.5-4	5.5-4	5.5	5.5	8	5.5	10	10	6	6	6
0300(15K)	M5	2.5	8-5	8-5	8	8	14	8	8	8	10	10	10
0380(18.5K)	M6	4.4	14-6	14-6	14	14	22	14	6	6	16	16	16
0440(22K)	M6	4.4	22-6	22-6	22	22	22	14	4	4	25	25	16

*1 The cable size is that of the HIV cable (600 V grade heat-resistant PVC insulated wire) etc. with continuous maximum permissible temperature of 75°C. It assumes a surrounding air temperature of 50°C or lower and the wiring distance of 20 m or shorter.

*2 The cable size is that of the THHW cable with continuous maximum permissible temperature of 75°C. It assumes a surrounding air temperature of 40°C or lower and the wiring distance of 20 m or shorter.
(For the use in the United States or Canada, refer to "Instructions for UL and cUL" in the document enclosed with the product.)

*3 The cable size is that of the PVC cable with continuous maximum permissible temperature of 70°C. It assumes a surrounding air temperature of 40°C or lower and the wiring distance of 20 m or shorter.
(Selection example mainly for use in Europe.)

*4 The screw size for terminals R/L1, S/L2, T/L3, U, V, W, PR, P/+, N/-, and P1, and the earthing (grounding) terminal is shown.
The screw size for earthing (grounding) the FR-E820-0080(1.5K) to 0175(3.7K), FR-E820-0760(18.5K), or FR-E820-0900(22K) is indicated in parentheses.

*5 The gauge is 0.75 mm^2 (19 AWG or 18 AWG) for the MM-GKR motor power supply cable (MR-PWS1CBL[]M-A[]-[]).
When the wiring length of the power supply cable for the MM-GKR motor exceeds 10 m, extend the cable using the MR-PWS2CBL03M-A_-L and an HIV wire of 1.25 mm^2 (16 AWG).

The line voltage drop can be calculated by the following formula:

$$\text{Line voltage drop [V]} = \frac{\sqrt{3} \times \text{wire resistance [m}\Omega\text{/m]} \times \text{wiring distance [m]} \times \text{current [A]}}{1000}$$

Use a larger diameter cable when the wiring distance is long or when it is desired to decrease the voltage drop (torque reduction) in the low speed range.

NOTE

- Tighten the terminal screw to the specified torque.
  A screw that has been tightened too loosely can cause a short circuit or malfunction.
  A screw that has been tightened too tightly can cause a short circuit or malfunction due to the unit breakage.
- Use crimp terminals with insulation sleeves to wire the power supply and motor.

◆ Total wiring length

■ With induction motor

Connect one or more general-purpose motors within the total wiring length shown in the following table.

Cable type	Pr.72 setting (carrier frequency)	Voltage class	0.1K	0.2K	0.4K	0.75K	1.5K	2.2K	3.7K or higher
Unshielded	1 (1 kHz) or lower	200 V	200 m	200 m	300 m	500 m	500 m	500 m	500 m
		400 V	—	—	200 m	200 m	300 m	500 m	500 m
	2 (2 kHz) or higher	200 V	30 m	100 m	200 m	300 m	500 m	500 m	500 m
		400 V	—	—	30 m	100 m	200 m	200 m	500 m
Shielded	1 (1 kHz) or lower	200 V	50 m	50 m	75 m	100 m	100 m	100 m	100 m
		400 V	—	—	50 m	50 m	75 m	100 m	100 m
	2 (2 kHz) or higher	200 V	10 m	25 m	50 m	75 m	100 m	100 m	100 m
		400 V	—	—	10 m	25 m	50 m	75 m	100 m

Total wiring length (FR-E820-0175(3.7K) or higher, FR-E840-0095(3.7K) or higher), unshielded cable

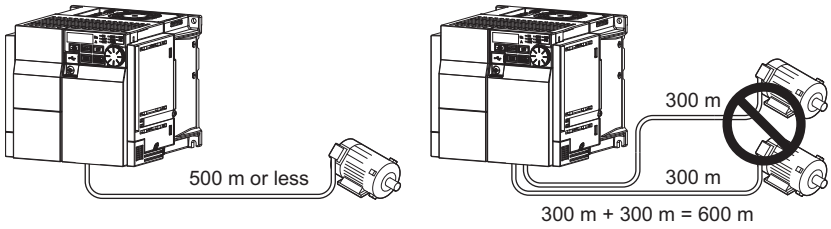

When driving a 400 V class motor by the inverter, surge voltages attributable to the wiring constants may occur at the motor terminals, deteriorating the insulation of the motor. In this case, take one of the following measure.

- Use a "400 V class inverter-driven insulation-enhanced motor" and set **Pr.72 PWM frequency selection** according to the wiring length.

Wiring length 50 m or shorter	Wiring length 50 to 100 m	Wiring length longer than 100 m
14.5 kHz or lower	8 kHz or lower	2 kHz or lower

■ With PM motor

Use the wiring length of 100 m or shorter when connecting a PM motor. For the MM-GKR13 motor, the wiring length should be 30 m or shorter.

Use one PM motor for one inverter. Multiple PM motors cannot be connected to an inverter.

When the wiring length exceeds 50 m for a 400 V class motor (other than MM-GKR or EM-A) driven by an inverter under PM sensorless vector control, set "9" (6 kHz) or less in **Pr.72 PWM frequency selection**.

NOTE

- Especially for long-distance wiring, the inverter may be affected by a charging current caused by stray capacitances of the wiring, leading to an activation of the overcurrent protection, malfunction of the fast-response current limit operation, or even to an inverter failure. It may also cause a malfunction or fault of the equipment connected ON the inverter output side. If the fast-response current limit function malfunctions, disable the function. (Refer to **Pr.156 Stall prevention operation selection** in the FR-E800 Instruction Manual (Function).)
- A surge voltage suppression filter (FR-ASF-H/FR-BMF-H) can be used under V/F control and Advanced magnetic flux vector control.
- For the details of **Pr.72 PWM frequency selection**, refer to the FR-E800 Instruction Manual (Function).
- Refer to page 112 to drive a 400 V class motor by an inverter.
- The carrier frequency is limited during Real sensorless vector control and PM sensorless vector control. (Refer to the FR-E800 Instruction Manual (Function).)

2.5.4 Earthing (grounding) precautions

Always earth (ground) the motor and inverter.

◆ Purpose of earthing (grounding)

Generally, an electrical apparatus has an earth (ground) terminal, which must be connected to the ground before use.

An electrical circuit is usually insulated by an insulating material and encased. However, it is impossible to manufacture an insulating material that can shut off a leakage current completely, and actually, a slight current flows into the case. The purpose of earthing (grounding) the case of an electrical apparatus is to prevent operators from getting an electric shock from this leakage current when touching it.

To avoid the influence of external noises, the earthing (grounding) is important to EMI-sensitive equipment that handle low-level signals or operate very fast such as audio equipment, sensors, and computers.

◆ Earthing (grounding) system to be established

As described previously, the purpose of earthing (grounding) is roughly classified into the electrical shock prevention and the prevention of malfunction due to the influence of electromagnetic noise. These two purposes should be clearly distinguished, and the appropriate earth (ground) system must be established to prevent the leakage current having the inverter's high frequency components from reversing through another earth (ground) point for malfunction prevention by following these instructions:

- Make the separate earth (ground) connection (I) for high frequency products such as the inverter from any other devices (EMI-sensitive devices described above) wherever possible.
  Establishing adequate common (single-point) earth (ground) system (II) shown in the following figure is allowed only in cases where the separate earth (ground) system (I) is not feasible. Do not make inadequate common (single-point) earth (ground) connection (III).
  As leakage currents containing many high frequency components flows into the earthing (grounding) cables of the inverter and peripheral devices (including a motor), the inverter must also be earthed (grounded) separately from EMI-sensitive devices described above.
  In a high building, it may be effective to use its iron structure frames as earthing (grounding) electrode for EMI prevention in order to separate from the earth (ground) system for electric shock prevention.
  - Earthing (Grounding) must conform to the requirements of national and local safety regulations and electrical codes (NEC section 250, IEC 61140 class 1 and other applicable standards). A neutral-point earthed (grounded) power supply for 400 V class inverter in compliance with EN standard must be used.
  - Use the thickest possible earthing (grounding) cable. The earthing (grounding) cable should be the size indicated in the table on page 54.
  - The earthing (grounding) point should be as close as possible to the inverter, and the earth (ground) wire length should be as short as possible.
  - Run the earthing (grounding) cable as far away as possible from the I/O wiring of the EMI-sensitive devices and run them in parallel in the minimum distance.

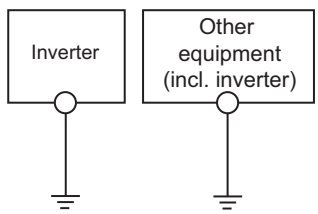

(I) Separate earthing (grounding): Good

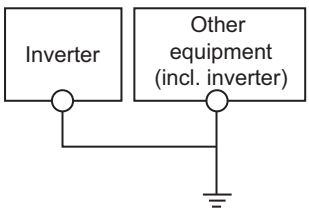

(III) Inadequate common (single-point) earthing (grounding): Bad

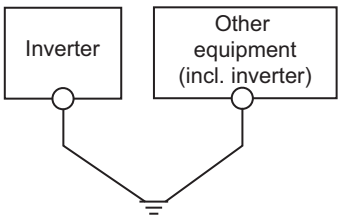

(II) Common (single-point) earthing (grounding): OK

NOTE

- To be compliant with the EU Directive (Low Voltage Directive), refer to the document enclosed with the product.

2.6 Control circuit

2.6.1 Details on the control circuit terminals (Standard model)

◆ Input signal

Type	Terminal symbol	Common	Terminal name	Terminal function description		Rated specification	Refer to page
Contact input	STF*1	SD (sink (negative common)) PC (source (positive common))	Forward rotation start	Turn ON the STF signal to start forward rotation and turn it OFF to stop.	When the STF and STR signals are turned ON simultaneously, the stop command is given.	Input resistance: 4.7 kΩ, voltage when contacts are open: 21 to 26 VDC, current when contacts are short-circuited: 4 to 6 mADC	*2
	STR*1		Reverse rotation start	Turn ON the STR signal to start reverse rotation and turn it OFF to stop.			
	RH RM RL*1		Multi-speed selection	Multi-speed can be selected according to the combination of RH, RM and RL signals.			*2
	MRS*1		Output stop	Turn ON the MRS signal (2 ms or more) to stop the inverter output. Use this signal to shut off the inverter output when stopping the motor with an electromagnetic brake.			*2
	RES*1		Reset	Use this signal to reset a fault output provided when a protective function is activated. Turn ON the RES signal for 0.1 seconds or longer, then turn it OFF. In the initial setting, reset is always enabled. By setting **Pr.75**, reset can be enabled only at an inverter fault occurrence. The inverter recovers about 1 second after the reset is released.			*2
Frequency setting	10	5	Frequency setting power supply	Used as the power supply for an external frequency setting (speed setting) potentiometer.		5 ±0.5 VDC, permissible load current: 10 mA	*2
	2	5	Frequency setting (voltage)	Inputting 0 to 5 VDC (or 0 to 10 VDC) provides the maximum output frequency at 5 V (or 10 V) and makes input and output proportional. Use **Pr.73** to switch among input 0 to 5 VDC (initial setting), 0 to 10 VDC, and 0 to 20 mA.* The initial setting varies depending on the specification. Set the voltage/current input switch to the "I" position to select current input (0 to 20 mA).		For voltage input, input resistance: 10±1 kΩ, maximum permissible voltage: 20 VDC. For current input, input resistance: 245 ±5 Ω, maximum permissible current: 30 mA. Voltage/current input switch 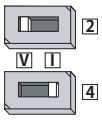 	*2
	4	5	Frequency setting (current)	Inputting 4 to 20 mADC (or 0 to 5 VDC, 0 to 10 VDC) provides the maximum output frequency at 20 mA and makes input and output proportional. This input signal is valid only when the AU signal is ON (terminal 2 input is invalid). To use the terminal 4 (current input at initial setting), assign "4" to any parameter from **Pr.178 to Pr.184** (Input terminal function selection) before turning ON the AU signal. * The initial setting varies depending on the specification. Use **Pr.267** to switch among input 4 to 20 mA (initial setting), 0 to 5 VDC, and 0 to 10 VDC. Set the voltage/current input switch to the "V" position to select voltage input (0 to 5 V / 0 to 10 V).			*2

*1 The terminal function can be selected by **Pr.178 to Pr.184 (Input terminal function selection)**. (Refer to the FR-E800 Instruction Manual (Function).)

*2 Refer to the FR-E800 Instruction Manual (Function).

◆ Output signal

Type	Terminal symbol	Common	Terminal name	Terminal function description		Rated specification	Refer to page
Relay	A, B, C*1	—	Relay output (fault output)	1 changeover contact output that indicates that an inverter's protective function has been activated and the outputs are stopped. Fault: discontinuity across B and C (continuity across A and C), Normal: continuity across B and C (discontinuity across A and C)		Contact capacity: 240 VAC 2 A (power factor = 0.4), 30 VDC 1 A	*4
Open collector	RUN*1	SE	Inverter running	The output is in LOW state when the inverter output frequency is equal to or higher than the starting frequency (initial value: 0.5 Hz). The output is in HIGH state during stop or DC injection brake operation.*2		Permissible load: 24 VDC (27 VDC at maximum), 0.1 A (The voltage drop is 3.4 V at maximum while the signal is ON.)	*4
	FU*1	SE	Frequency detection	The output is in LOW state when the inverter output frequency is equal to or higher than the preset detection frequency, and is in HIGH state when it is less than the preset detection frequency.*2			*4
Pulse	FM*3	SD	For meter	Among several monitor items such as output frequency, select one to output it via these terminals. (The signal is not output during an inverter reset.) The size of output signal is proportional to the magnitude of the corresponding monitor item.	Output item: output frequency (initial setting)	Permissible load current: 1 mA 1440 pulses/s at 60 Hz	*4
Analog	AM*3	5	Analog voltage output			Output signal: 0 ±10 VDC, permissible load current: 1 mA (load impedance 10 kΩ or more), resolution: 12 bits	*4

*1 The terminal function can be selected by **Pr.190 to Pr.192 (Output terminal function selection)**. (Refer to the FR-E800 Instruction Manual (Function).)
*2 The open collector transistor is ON (conductive) in LOW state. The transistor is OFF (not conductive) in HIGH state.
*3 Terminal FM is available for the FM type inverter. Terminal AM is available for the AM type inverter.
*4 Refer to the FR-E800 Instruction Manual (Function).

◆ Safety stop signal

Terminal symbol	Common	Terminal name	Terminal function description	Rated specification	Refer to page
S1	PC	Safety stop input (channel 1)	Use terminals S1 and S2 to receive the safety stop signal input from the safety relay module. Terminals S1 and S2 can be used at a time (dual channel). The Inverter judges the condition of the internal safety circuit from the status (shorted/opened) between terminals S1 and PC, or between S2 and PC. When the status is opened, the inverter output is shut off. In the initial status, terminal S1 and S2 are shorted with terminal PC by shorting wires. Remove the shorting wires and connect the safety relay module when using the safety stop function.	Input resistance: 4.7 kΩ, voltage when contacts are open: 21 to 26 VDC, current when contacts are short-circuited: 4 to 6 mADC	74
S2	PC	Safety stop input (channel 2)			
SO	SOC	Safety monitor output (open collector output)	The output status varies depending on the input status of the safety stop signals. The output is in HIGH state during occurrence of the internal safety circuit fault. The output is in LOW state otherwise. (The open collector transistor is ON (conductive) in LOW state. The transistor is OFF (not conductive) in HIGH state.) Refer to the FR-E800 Instruction Manual (Functional Safety) (BCN-A23488-000) when the signal is switched to HIGH while both terminals S1 and S2 are open. (Contact your sales representative for this manual.)	Permissible load: 24 VDC (27 VDC at maximum), 0.1 A (The voltage drop is 3.4 V at maximum while the signal is ON.)	

◆ Common terminal

Terminal symbol	Common	Terminal name	Terminal function description	Rated specification	Refer to page
SD	—	Contact input common (sink (negative common))	Common terminal for the contact input terminal (sink logic), terminal FM.	—	—
		External transistor common (source (positive common))	Connect this terminal to the power supply common terminal of a transistor output (open collector output) device, such as a programmable controller, in the source logic to avoid malfunction by undesirable current.		
		24 VDC power supply common	Common terminal for the 24 VDC power supply (terminal PC). Isolated from terminals 5 and SE.		
PC	—	External transistor common (sink (negative common))	Connect this terminal to the power supply common terminal of a transistor output (open collector output) device, such as a programmable controller, in the sink logic to avoid malfunction by undesirable current.	Power supply voltage range: 22 to 26.5 VDC, permissible load current: 100 mA	—
		Safety stop input terminal common	Common terminal for safety stop input terminals		
		Contact input common (source (positive common))	Common terminal for contact input terminal (source logic).		
	SD	24 VDC power supply	Can be used as a 24 VDC 0.1 A power supply.		
5	—	Frequency setting common	Common terminal for the frequency setting signal (terminal 2 or 4). Do not earth (ground).	—	*1
SE	—	Open collector output common	Common terminal for terminals RUN and FU.	—	—
SOC	—	Safety monitor output terminal common	Common terminal for terminal SO.	—	74

*1 Refer to the FR-E800 Instruction Manual (Function).

◆ Communication

Type	Terminal symbol	Terminal name	Terminal function description	Refer to page
RS-485	—	PU connector	RS-485 communication can be made through the PU connector Conforming standard: EIA-485 (RS-485) Transmission format: Multidrop link Communication speed: 300 to 115200 bps Wiring length: 500 m	85
USB	—	USB B connector*1	Mini B connector (receptacle). By connecting the inverter to a personal computer via this connector, FR Configurator2 installed on the computer can be used for setting the inverter, or monitoring or testing the inverter operation. Interface: conforms to USB 1.1 (USB 2.0 full-speed compatible) Transmission speed: 12 Mbps Power supply: 5 V, 100 mA (500 mA maximum)	88

*1 USB bus power connection is available. The maximum SCCR is 500 mA. A PU connector cannot be used during USB bus power connection.

2.6.2 Details on the control circuit terminals (Ethernet model)

◆ Input signal

Type	Terminal symbol	Common	Terminal name	Terminal function description		Rated specification	Refer to page
Contact input	DI0[*1]	SD (sink (negative common)) PC (source (positive common))	Forward rotation start	Turn ON the STF signal to start forward rotation and turn it OFF to stop.	When the STF and STR signals are turned ON simultaneously, the stop command is given.	Input resistance: 4.7 kΩ, voltage when contacts are open: 21 to 27 VDC, current when contacts are short-circuited: 4 to 6 mADC	*2
	DI1[*1]		Reverse rotation start	Turn ON the STR signal to start reverse rotation and turn it OFF to stop.			
Frequency setting	10	5	Frequency setting power supply	When connecting the frequency setting potentiometer at an initial status, connect it to terminal 10.		5 VDC ±0.5 V, permissible load current: 10 mA	*2
	2	5	Frequency setting (voltage)	Inputting 0 to 5 VDC (or 0 to 10 VDC) provides the maximum output frequency at 5 V (or 10 V) and makes input and output proportional. Use **Pr.73** to switch among input 0 to 5 VDC (initial setting), 0 to 10 VDC, and 0 to 20 mA. * The initial setting varies depending on the specification. Set the voltage/current input switch to the "I" position to select current input (0 to 20 mA).		For voltage input, input resistance: 10±1 kΩ, maximum permissible voltage: 20 VDC. For current input, input resistance: 245 ±5 Ω, maximum permissible current: 30 mA. Voltage/current input switch 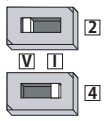 	*2
	4	5	Frequency setting (current)	Inputting 4 to 20 mADC (or 0 to 5 VDC, 0 to 10 VDC) provides the maximum output frequency at 20 mA and makes input and output proportional. This input signal is valid only when the AU signal is ON (terminal 2 input is invalid). To use the terminal 4 (current input at initial setting), assign "4" to **Pr.178 or Pr.179** (Input terminal function selection) before turning ON the AU signal. * The initial setting varies depending on the specification. Use **Pr.267** to switch among input 4 to 20 mA (initial setting), 0 to 5 VDC, and 0 to 10 VDC. Set the voltage/current input switch to the "V" position to select voltage input (0 to 5 V / 0 to 10 V).			*2

*1 The terminal function can be selected by **Pr.178 or Pr.179** (Input terminal function selection). (Refer to the FR-E800 Instruction Manual (Function).)

*2 Refer to the FR-E800 Instruction Manual (Function).

◆ Output signal

Type	Terminal symbol	Common	Terminal name	Terminal function description	Rated specification	Refer to page
Relay	A, B, C[*1]	—	Relay output (fault output)	1 changeover contact output that indicates that an inverter's protective function has been activated and the outputs are stopped. Fault: discontinuity across B and C (continuity across A and C), Normal: continuity across B and C (discontinuity across A and C)	Contact capacity: 240 VAC 2 A (power factor = 0.4), 30 VDC 1 A	*2

*1 The terminal function can be selected by **Pr.192** (Output terminal function selection). (Refer to the FR-E800 Instruction Manual (Function).)

*2 Refer to the FR-E800 Instruction Manual (Function).

◆ Safety stop signal

Terminal symbol	Common	Terminal name	Terminal function description	Rated specification	Refer to page
S1	PC	Safety stop input (channel 1)	Use terminals S1 and S2 to receive the safety stop signal input from the safety relay module. Terminals S1 and S2 can be used at a time (dual channel). The Inverter judges the condition of the internal safety circuit from the status (shorted/opened) between terminals S1 and PC, or between S2 and PC. When the status is opened, the inverter output is shut off. In the initial status, terminal S1 and S2 are shorted with terminal PC by shorting wires. Remove the shorting wires and connect the safety relay module when using the safety stop function.	Input resistance: 4.7 kΩ, voltage when contacts are open: 21 to 26 VDC, current when contacts are short-circuited: 4 to 6 mADC	74
S2	PC	Safety stop input (channel 2)			
SO	SOC	Safety monitor output (open collector output)	The output status varies depending on the input status of the safety stop signals. The output is in HIGH state during occurrence of the internal safety circuit fault. The output is in LOW state otherwise. (The open collector transistor is ON (conductive) in LOW state. The transistor is OFF (not conductive) in HIGH state.) Refer to the FR-E800 Instruction Manual (Functional Safety) (BCN-A23488-000) when the signal is switched to HIGH while both terminals S1 and S2 are open. (Contact your sales representative for this manual.)	Permissible load: 24 VDC (27 VDC at maximum), 0.1 A (The voltage drop is 3.4 V at maximum while the signal is ON.)	

◆ Common terminal

Terminal symbol	Common	Terminal name	Terminal function description	Rated specification	Refer to page
SD	—	Contact input common (sink (negative common))	Common terminal for the contact input terminal (sink logic).	—	—
		External transistor common (source (positive common))	Connect this terminal to the power supply common terminal of a transistor output (open collector output) device, such as a programmable controller, in the source logic to avoid malfunction by undesirable current.		
		24 VDC power supply common	Common terminal for the 24 VDC power supply (terminal PC). Isolated from terminal 5.		
PC	—	External transistor common (sink (negative common))	Connect this terminal to the power supply common terminal of a transistor output (open collector output) device, such as a programmable controller, in the sink logic to avoid malfunction by undesirable current.	Power supply voltage range: 22 to 26.5 VDC, permissible load current: 100 mA	—
		Safety stop input terminal common	Common terminal for safety stop input terminals		
		Contact input common (source (positive common))	Common terminal for contact input terminal (source logic).		
	SD	24 VDC power supply	Can be used as a 24 VDC 0.1 A power supply.		
5	—	Frequency setting common	Common terminal for the frequency setting signal (terminal 2 or 4). Do not earth (ground).	—	*1
SOC	—	Safety monitor output terminal common	Common terminal for terminal SO.	—	—

*1 Refer to the FR-E800 Instruction Manual (Function).

◆ Communication

Type	Terminal symbol	Terminal name	Terminal function description	Refer to page
Ethernet	—	Ethernet connector (2 ports)*1	Communication can be made via Ethernet. Category: 100BASE-TX/10BASE-T Transmission method: Baseband Data transmission speed: 100 Mbps (100BASE-TX) / 10 Mbps (10BASE-T) Maximum segment length: 100 m between the hub and the inverter Interface: RJ-45 Number of cascade connection stages: Up to 2 (100BASE-TX) / up to 4 (10BASE-T) Number of interfaces available: 2 IP version: IPv4	*3
USB	—	USB B connector*2	Mini B connector (receptacle). By connecting the inverter to a personal computer via this connector, FR Configurator2 installed on the computer can be used for setting the inverter, or monitoring or testing the inverter operation. Interface: conforms to USB 1.1 (USB 2.0 full-speed compatible) Transmission speed: 12 Mbps Power supply: 5 V, 100 mA (500 mA maximum)	*3

*1 Do not connect the parameter unit. The inverter may be damaged.
*2 USB bus power connection is available. The maximum SCCR is 500 mA.
*3 Refer to the FR-E800 Instruction Manual (Function).

2.6.3 Details on the control circuit terminals (Safety communication model)

◆ Input signal

Type	Terminal symbol	Common	Terminal name	Terminal function description	Rated specification	Refer to page
Frequency setting	10	5	Frequency setting power supply	Used as the power supply for an external frequency setting (speed setting) potentiometer.	5 ±0.5 VDC, permissible load current: 10 mA	*1
	2	5	Frequency setting (voltage)	Inputting 0 to 5 VDC (or 0 to 10 VDC) provides the maximum output frequency at 5 V (or 10 V) and makes input and output proportional. Use **Pr.73** to switch among input 0 to 5 VDC (initial setting), 0 to 10 VDC, and 0 to 20 mA. * The initial setting varies depending on the specification. Set the voltage/current input switch to the "I" position to select current input (0 to 20 mA).	For voltage input, input resistance: 10±1 kΩ, maximum permissible voltage: 20 VDC. For current input, input resistance: 245 ±5 Ω, maximum permissible current: 30 mA. Voltage/current input switch 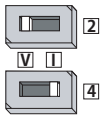	*1
	4	5	Frequency setting (current)	Inputting 4 to 20 mADC (or 0 to 5 VDC, 0 to 10 VDC) provides the maximum output frequency at 20 mA and makes input and output proportional. This input signal is valid only when the AU signal is ON (terminal 2 input is invalid). To use terminal 4 (current input at initial setting), assign "4" to **Pr.178 or Pr.189** (Input terminal function selection) before turning ON the AU signal. * The initial setting varies depending on the specification. Use **Pr.267** to switch among input 4 to 20 mA (initial setting), 0 to 5 VDC, and 0 to 10 VDC. Set the voltage/current input switch to the "V" position to select voltage input (0 to 5 V / 0 to 10 V).		*1

*1 Refer to the FR-E800 Instruction Manual (Function).

◆ Output signal

Type	Terminal symbol	Common	Terminal name	Terminal function description	Rated specification	Refer to page
Relay	A, B, C*1	—	Relay output (fault output)	1 changeover contact output that indicates that an inverter's protective function has been activated and the outputs are stopped. Fault: discontinuity across B and C (continuity across A and C), Normal: continuity across B and C (discontinuity across A and C)	Contact capacity: 240 VAC 2 A (power factor = 0.4), 30 VDC 1 A	*2

*1 The terminal function can be selected by **Pr.192** (Output terminal function selection). (Refer to the FR-E800 Instruction Manual (Function).)
*2 Refer to the FR-E800 Instruction Manual (Function).

◆ Safety input/output signal

Type	Terminal symbol	Common	Terminal name	Terminal function description	Rated specification	Refer to page
Contact input	SX1	PC	Safety input (channel 1)	Terminal functions can be selected using **Pr.S051 SX1/SX2 terminal function selection**.	Input resistance: 4.7 kΩ, voltage when contacts are open: 21 to 26 VDC, current when contacts are short-circuited: 4 to 6 mADC	*1
	SX2	PC	Safety input (channel 2)			*1
Open collector output	SY1	SC1	Safety output (channel 1)	Terminal functions can be selected using **Pr.S055 SY1/SY2 terminal function selection**.	Permissible load: 24 VDC (27 VDC at maximum), 0.1 A (The voltage drop is 3.4 V at maximum while the signal is ON.)	*1
	SY2	SC2	Safety output (channel 2)			*1

*1 Refer to the FR-E800-SCE Instruction Manual (Functional Safety).

◆ Common terminal

Terminal symbol	Common	Terminal name	Terminal function description	Rated specification	Refer to page
SD	—	24 VDC power supply common External transistor common (source)	Common output terminal for 24 VDC 0.1 A power supply (terminal PC). Isolated from terminal 5.	—	74
PC	—	Safety input terminal common	Common terminal for terminals SX1 and SX2.*1 Can be used as a 24 VDC 0.1 A power supply.*1	Power supply voltage range: 22 to 26.5 VDC, permissible load current: 100 mA	*2
	SD	24 VDC power supply			*2
5	—	Frequency setting common	Common terminal for the frequency setting signal (terminal 2 or 4). Do not earth (ground).	—	*1
SC1	—	Safety output common (channel 1)	Common terminal for terminal SY1	—	*2
SC2	—	Safety output common (channel 2)	Common terminal for terminal SY2		*2

*1 Refer to the FR-E800 Instruction Manual (Function).
*2 Refer to the FR-E800-SCE Instruction Manual (Functional Safety).

◆ Communication

Type	Terminal symbol	Terminal name	Terminal function description	Refer to page
Ethernet	—	Ethernet connector (2 ports)*1	Communication can be made via Ethernet. Category: 100BASE-TX/10BASE-T Transmission method: Baseband Data transmission speed: 100 Mbps (100BASE-TX) / 10 Mbps (10BASE-T) Maximum segment length: 100 m between the hub and the inverter Interface: RJ-45 Number of cascade connection stages: Up to 2 (100BASE-TX) / up to 4 (10BASE-T) Number of interfaces available: 2 IP version: IPv4	*3
USB	—	USB B connector*2	Mini B connector (receptacle). By connecting the inverter to a personal computer via this connector, FR Configurator2 installed on the computer can be used for setting the inverter, or monitoring or testing the inverter operation. Interface: conforms to USB 1.1 (USB 2.0 full-speed compatible) Transmission speed: 12 Mbps Power supply: 5 V, 100 mA (500 mA maximum)	*3

*1 Do not connect the parameter unit. The inverter may be damaged.
*2 USB bus power connection is available. The maximum SCCR is 500 mA.
*3 Refer to the FR-E800 Instruction Manual (Function).

2.6.4 Control logic (sink/source) change (Standard model / Ethernet model)

The control logic of input signals can be switched as necessary for the standard model and the Ethernet model.
To change the control logic, change the DIP switch position on the control circuit board.
The initial setting of the control logic differs depending on the specification.
(The output signals may be used in either the sink or source logic independently of the switch setting.)

■Standard model

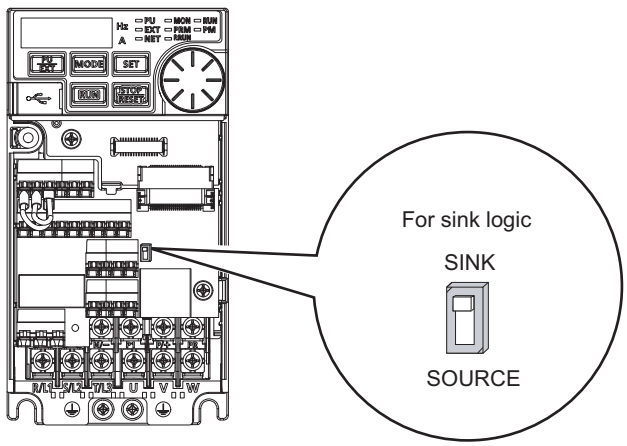

■Ethernet model

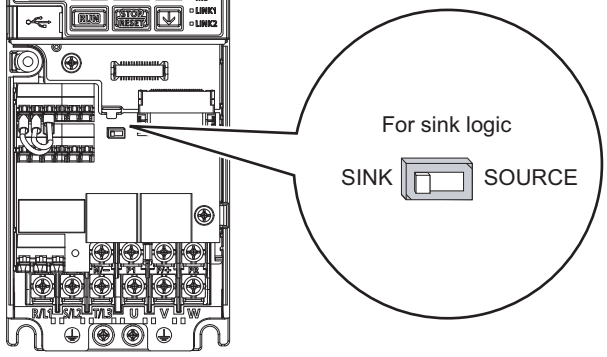

NOTE

- Never change the control logic while power is ON.

◆ Sink logic and source logic

- In the sink logic, a signal turns ON when a current exits from the corresponding signal input terminal.
  Terminal SD is common to the contact input signals. Terminal SE is common to the open collector output signals.

- In the source logic, a signal turns ON when a current enters into the corresponding signal input terminal.
  Terminal PC is common to the contact input signals. Terminal SE is common to the open collector output signals.

●Current flow concerning the input/output signal when sink logic is selected

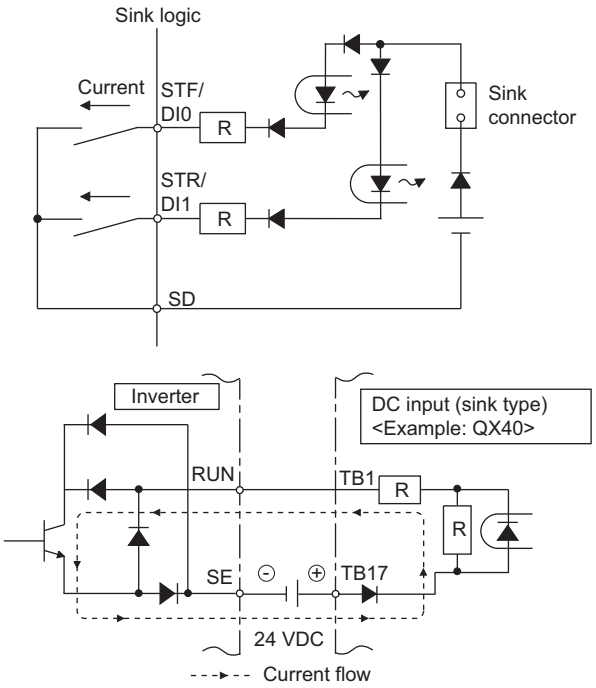

●Current flow concerning the input/output signal when source logic is selected

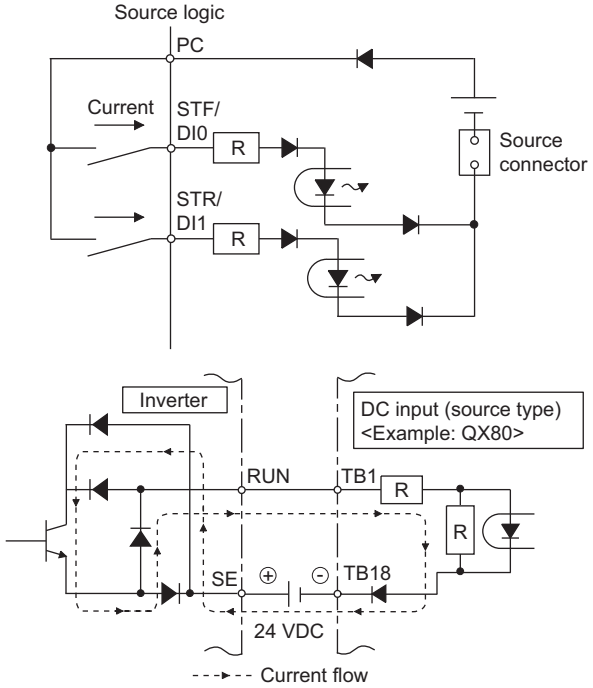

- When using an external power supply for transistor output

Sink logic	Source logic
Use terminal PC as a common terminal, and perform wiring as follows. (Do not connect terminal SD on the inverter with the terminal of 0 V for the external power supply. When using terminals PC-SD as a 24 VDC power supply, do not install an external power supply in parallel with the inverter. Doing so may cause a malfunction in the inverter due to undesirable currents.)	Use terminal SD as a common terminal, and perform wiring as follows. (Do not connect terminal PC on the inverter with the terminal of +24 V for the external power supply. When using terminals PC-SD as a 24 VDC power supply, do not install an external power supply in parallel with the inverter. Doing so may cause a malfunction in the inverter due to undesirable currents.)
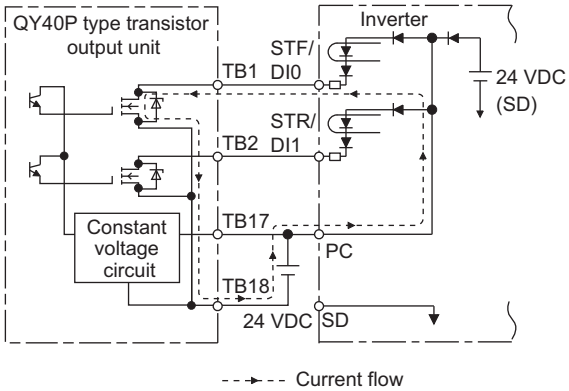	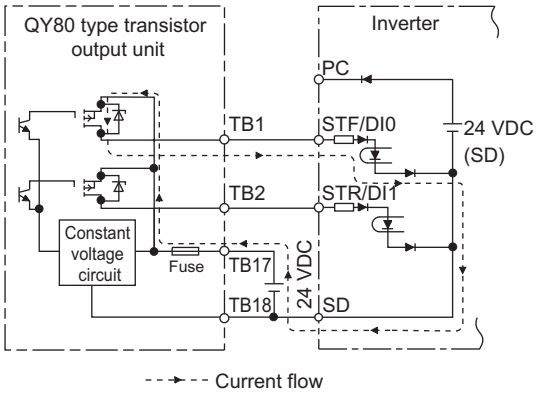

2.6.5 Wiring of control circuit

◆ Control circuit terminal layout

■ Standard model (FM type inverter)

- Recommended cable gauge: 0.3 to 0.75 mm^2

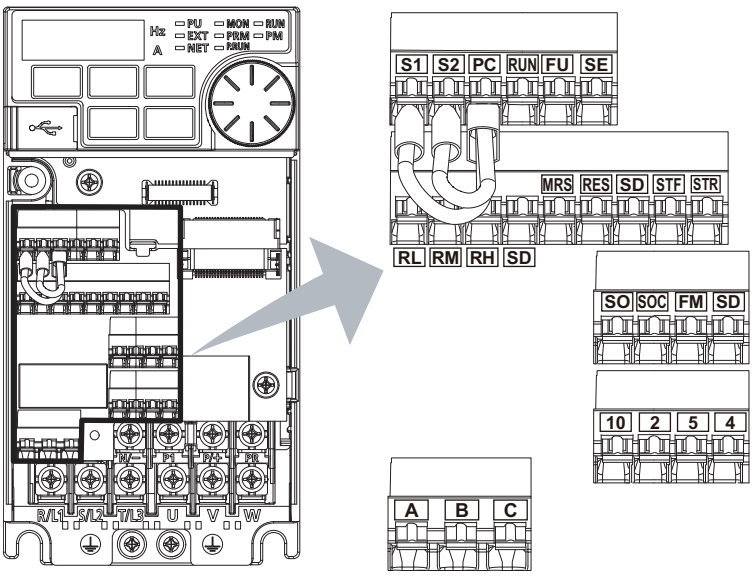

■ Standard model (AM type inverter)

- Recommended cable gauge: 0.3 to 0.75 mm^2

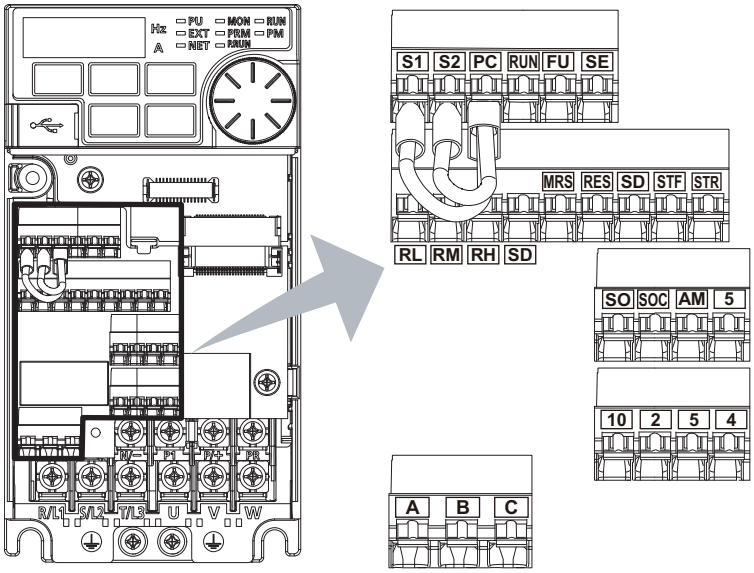

■ Ethernet model

- Recommended cable gauge: 0.3 to 0.75 mm^2

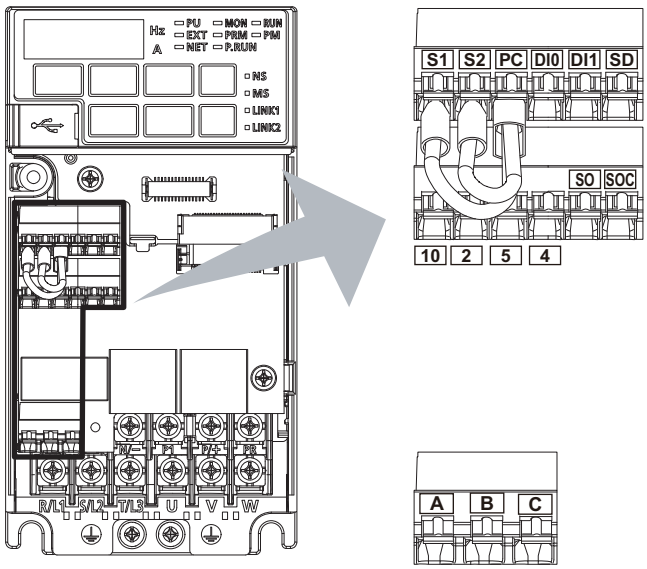

■ Safety communication model

- Recommended cable gauge: 0.3 to 0.75 mm^2

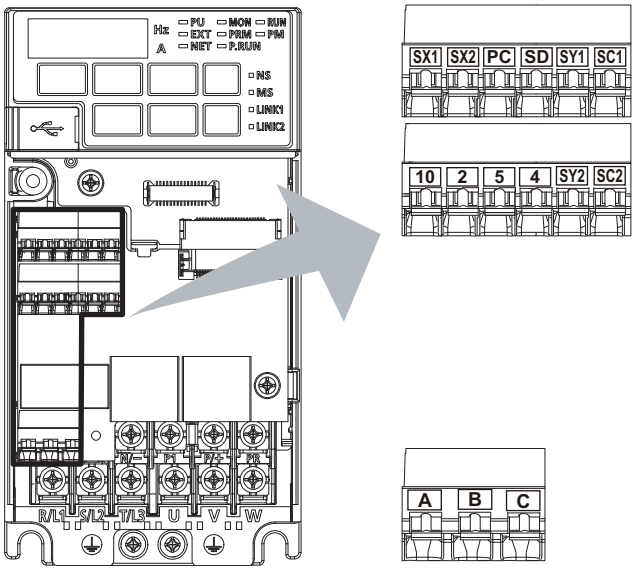

◆ Wiring method

■ Power supply connection

Use crimp terminals and stripped wire for the control circuit wiring. For single wire, the stripped wire can be used without crimp terminal.

Connect the end of wires (crimp terminal or stranded wire) to the terminal block.

1. Strip the signal wires as shown below. If too much of the wire is stripped, a short circuit may occur with neighboring wires. If not enough of the wire is stripped, wires may become loose and fall out.
Twist the stripped end of wires to prevent them from fraying. Do not solder it.

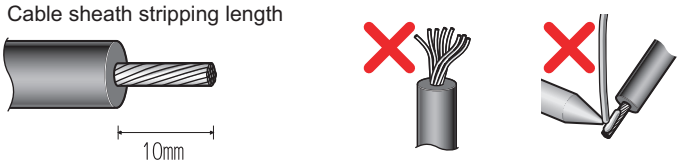

2. Crimp the terminals on the wire.

Insert wires to the crimp terminal, and check that the wires come out for about 0 to 0.5 mm from a sleeve.

Check the condition of the crimp terminals after crimping. Do not use the crimp terminals of which the crimping is inappropriate, or the face is damaged.

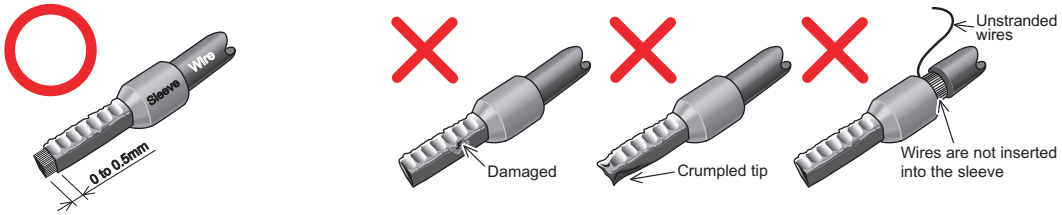

Crimp terminals commercially available (as of October 2020)

- Phoenix Contact Co., Ltd.

Wire gauge (mm^2)	Ferrule part No.		Crimping tool model No.
	With insulation sleeve	Without insulation sleeve	
0.3	AI 0,34-10TQ	—	CRIMPFOX 6
0.5	AI 0,5-10WH	—	
0.75	AI 0,75-10GY	A 0,75-10	
1	AI 1-10RD	A 1-10	
1.25, 1.5	AI 1, 5-10BK	A 1, 5-10	
0.75 (two-wire product)	AI-TWIN 2×0,75-10GY	—	

- NICHIFU Co., Ltd.

Wire gauge (mm^2)	Blade terminal part No.	Insulation cap part No.	Crimping tool model No.
0.3 to 0.75	BT 0.75-11	VC 0.75	NH 69

3. Insert the wire into the terminal block.

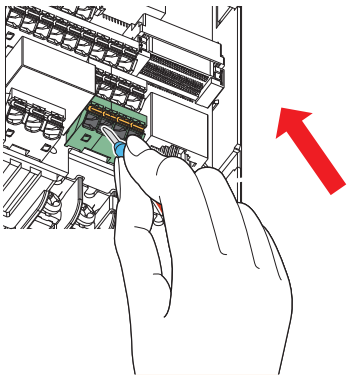

When using single wire or stranded wire without crimp terminal, push an open/close button all the way down with a flathead screw driver, and insert the wire.

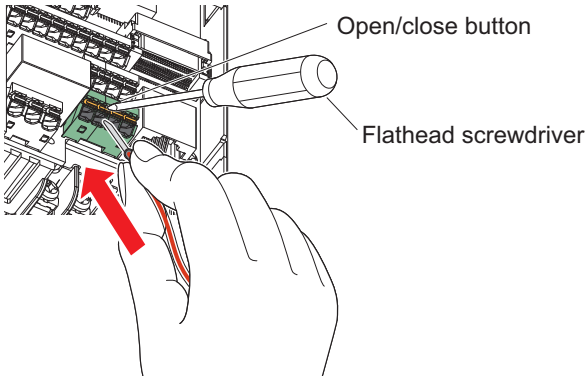

NOTE

- When using stranded wires without a blade terminal, twist enough to avoid short circuit with a nearby terminals or wires.
- Place the flathead screwdriver vertical to the open/close button. In case the blade tip slips, it may cause an inverter damage or injury.

■ Wire removal

Pull the wire while pushing the open/close button all the way down firmly with a flathead screwdriver.

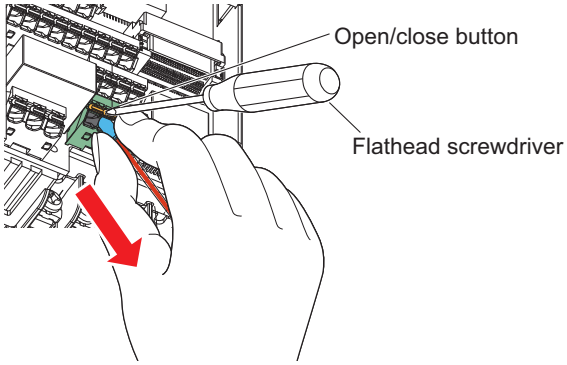

NOTE

- Pulling out the wire forcefully without pushing the open/close button all the way down may damage the terminal block.
- Use a small flathead screwdriver (tip thickness: 0.4 mm / tip width: 2.5 mm).
  If a flathead screwdriver with a narrow tip is used, terminal block may be damaged.
  Commercially available products (as of October 2020)

Product name	Model	Manufacturer
Driver	SZF 0- 0,4 × 2,5	Phoenix Contact Co., Ltd.

- Place the flathead screwdriver vertical to the open/close button. In case the blade tip slips, it may cause an inverter damage or injury.

■ Using terminal PC as the external transistor common terminal (standard model / Ethernet model)

Remove jumpers connecting terminals PC and S1 and terminals PC and S2, and wire terminals as follows.

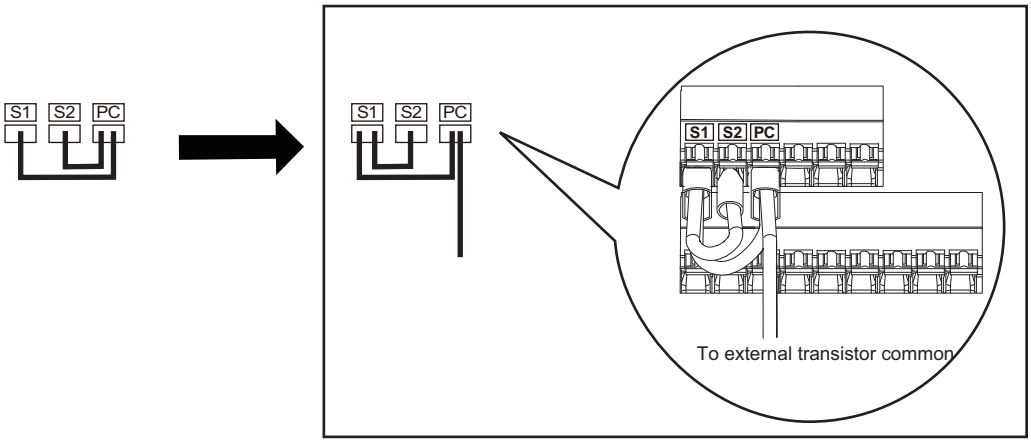

NOTE

- Note that two wires are connected to terminal PC and terminal S1.

◆ Common terminals of the control circuit (SD, PC, 5, SE)

- Terminals SD (sink logic), PC (source logic), 5, and SE are common terminals (0 V) for I/O signals. (All common terminals are isolated from each other.) Do not earth (ground) these terminals. Avoid connecting terminal SD (sink logic) with terminal 5, terminal PC (source logic) with terminal 5, and terminal SE with terminal 5.
- In the sink logic, terminal SD is a common terminal for the contact input terminals (STF (DI0), STR (DI1), RH, RM, RL, MRS, and RES) and the pulse train output terminal (FM[*1]). The open collector circuit is isolated from the internal control circuit by photocoupler.
- In the source logic, terminal PC is a common terminal for the contact input terminals (STF (DI0), STR (DI1), RH, RM, RL, MRS, and RES). The open collector circuit is isolated from the internal control circuit by photocoupler.

- Terminal 5 is a common terminal for the frequency setting terminal (2 or 4) and the analog output terminals (AM[*2]). It should be protected from external noise using a shielded or twisted cable.
- Terminal SE is a common terminal for the open collector output terminals (RUN and FU). The contact input circuit is isolated from the internal control circuit by photocoupler.

*1 Terminal FM is provided in the FM-type standard model inverter.
*2 Terminal AM is provided in the AM-type standard model inverter.

◆ Signal inputs by contactless switches

The contact input terminals of the inverter (STF (DI0), STR (DI1), RH, RM, RL, MRS, and RES) can be controlled using a transistor instead of a contact switch. Refer to page 68 for the connection diagram.

2.6.6 Wiring precautions

- It is recommended to use a cable of 0.3 to 0.75 mm^2 for the connection to the control circuit terminals.
- The wiring length should be 30 m (200 m for terminal FM) at the maximum.
- Do not short across terminals PC and SD. Doing so may cause an inverter failure.
- Use two or more parallel micro-signal contacts or twin contacts to prevent contact faults when using contact inputs since the control circuit input signals are micro-currents.

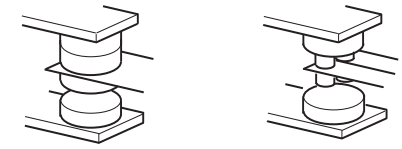

Micro signal contacts Twin contacts

- To suppress EMI, use shielded or twisted cables for the control circuit terminals and run them away from the main and power circuits (including the 200 V relay sequence circuit). For the cables connected to the control circuit terminals, connect their shields to the common terminal of the connected control circuit terminal. When connecting an external power supply to terminal PC, however, connect the shield of the power supply cable to the negative side of the external power supply. Do not directly earth (ground) the shield to the enclosure, etc.
- Always apply a voltage to the fault output terminals (A, B, and C) via a relay coil, lamp, etc.
- When a relay coil is connected to the output terminals, use one with a surge absorbing function (reflux diode). When the voltage application direction is incorrect, the inverter will be damaged. Pay attention to the diode direction or other precautions to avoid incorrect wiring.

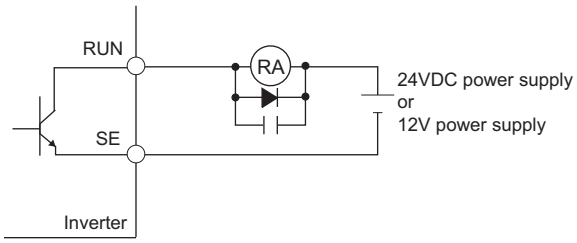

2.6.7 Safety stop function (Standard model / Ethernet model)

◆ Function description

The terminals related to the safety stop function are as follows.

Terminal symbol	Terminal function description	
S1*1	Input terminal as the safety stop channel 1.	Status of both the circuit between terminals S1 and PC and the circuit between terminals S2 and PC Open: Safety stop is activated. Shorted: Safety stop is not activated
S2*1	Input terminal as the safety stop channel 2.	
PC*1	Common terminal for S1 and S2.	
SO	Output terminal used for fault detection and fault indication display. The terminal is ON (conducted) while no internal safety circuit failure*2 exists.	OFF: Internal safety circuit fault*2 ON: No internal safety circuit fault*2
SOC	Open collector output (terminal SO) common	

*1 In the initial status, terminals S1 and PC and terminals S2 and PC are respectively shorted with shorting wires.) To use the safety stop function, remove all the shorting wires, and then connect to the safety relay module as shown in the connection diagram.

*2 When any fault listed on the next page occurs in the internal safety circuit, the corresponding indication is shown on the operation panel.

NOTE

- Terminal SO can be used to display a fault indication and to prevent restarting of the inverter. The signal output from terminal SO cannot be used to input a safety stop signal to other devices.

◆ Connection diagram

To prevent restart at fault occurrence, connect terminals SO and SOC to the reset button, which are the feedback input terminals of the safety relay module.

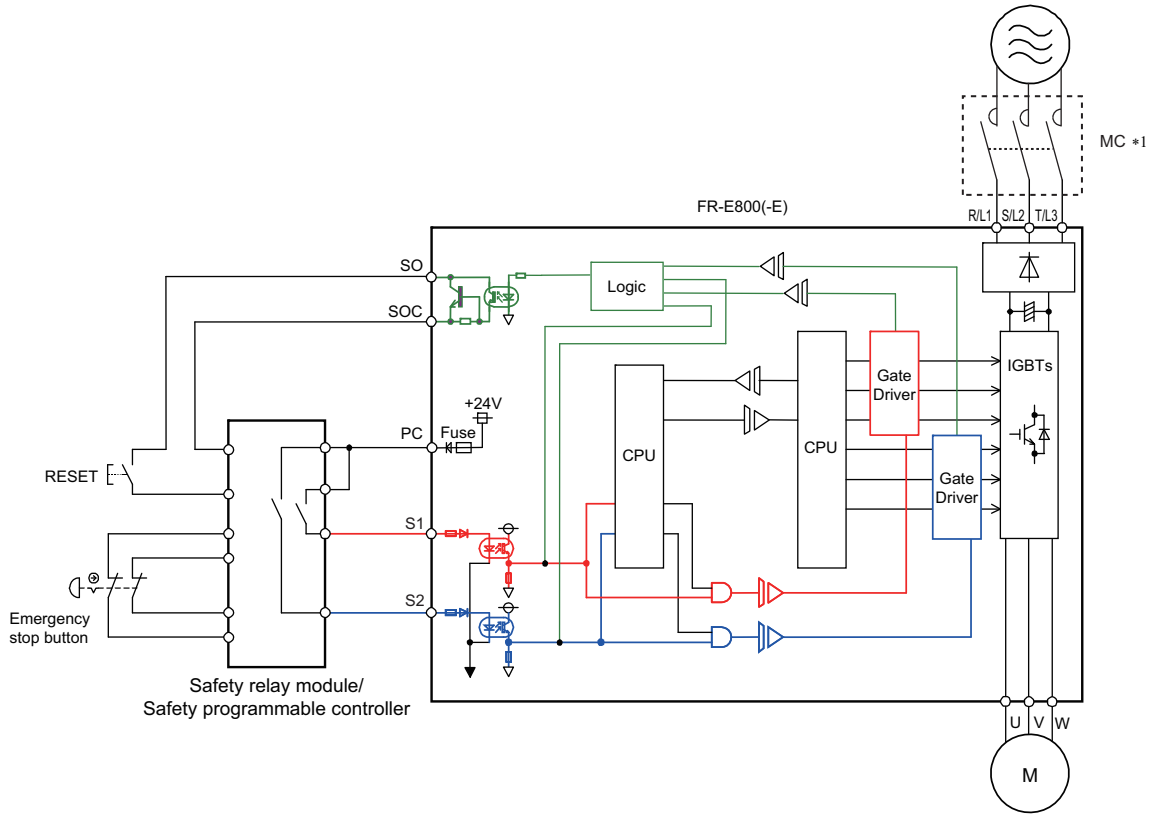

*1 To avoid an electric shock hazard, install a magnetic contactor (MC) at the input side of the inverter.

◆ Safety stop function operation

Input power	Internal safety circuit status	Input terminal*1*2		Output terminal	Output signal*8*9*10		Inverter operating status	Operation panel indication	
		S1	S2	SO	SAFE	SAFE2		E.SAF*6	SA*7
OFF	—	—	—	OFF	OFF	OFF	Output shutoff (Safe state)	Not displayed	Not displayed
ON	Normal	ON	ON	ON*3	OFF	ON*3	Operation enabled	Not displayed	Not displayed
	Normal	ON	OFF	OFF*4	OFF*4	OFF*4	Output shutoff (Safe state)	Displayed	Displayed
	Normal	OFF	ON	OFF*4	OFF*4	OFF*4	Output shutoff (Safe state)	Displayed	Displayed
	Normal	OFF	OFF	ON*3	ON*3	ON*3	Output shutoff (Safe state)	Not displayed	Displayed
	Fault	ON	ON	OFF	OFF	OFF	Output shutoff (Safe state)	Displayed	Not displayed*5
	Fault	ON	OFF	OFF	OFF	OFF	Output shutoff (Safe state)	Displayed	Displayed
	Fault	OFF	ON	OFF	OFF	OFF	Output shutoff (Safe state)	Displayed	Displayed
	Fault	OFF	OFF	OFF	OFF	OFF	Output shutoff (Safe state)	Displayed	Displayed

*1 The terminal ON state shows that the terminal is conducted (the line is closed), and the OFF state shows that the terminal is not conducted (the line is open).

*2 When not using the safety stop function, short across terminals S1 and PC and terminals S2 and PC to use the inverter. (In the initial status, terminals S1 and PC and terminals S2 and PC are respectively shorted with shorting wires.)

*3 If any of the faults shown in the following table occurs, terminal SO, the SAFE signal, and the SAFE2 signal are turned OFF.

Fault type	Operation panel indication
Option fault	E.OPT
Communication option fault	E.OP1
Internal storage device fault	E.PE6
Parameter storage device fault (control circuit board)	E.PE
Retry count excess	E.RET
Parameter storage device fault (main circuit board)	E.PE2
Safety circuit fault	E.SAF
Overspeed occurrence	E.OS

Fault type	Operation panel indication
Speed deviation excess detection	E.OSD
Signal loss detection	E.ECT
Excessive position fault	E.OD
Brake sequence fault	E.MB1 to E.MB7
Acceleration error	E.OA
CPU fault	E.CPU
	E.5 to E.7
Internal circuit fault	E.13

*4 When the internal safety circuit is operated normally (no fault occurs), terminal SO, the SAFE signal, and the SAFE2 signal remain ON until "E.SAF" is displayed. Terminal SO, the SAFE signal, and the SAFE2 signal are turned OFF when "E.SAF" is displayed.

*5 "SA" is displayed when terminals S1 and S2 are identified as OFF due to the internal safety circuit failure.

*6 If another fault occurs when the fault E.SAF occurs, the other fault indication may be displayed.

*7 If another warning occurs when the warning SA occurs, the other warning indication may be displayed.

*8 The ON/OFF state of the output signal is the one for the positive logic. In negative logic, the signal status is opposite.

*9 To assign the functions of the SAFE signal and SAFE2 signal to output terminals, set values shown in the following table in any two parameters from **Pr.190 to Pr.196 (Output terminal function selection)**.

Output signal	Pr.190 to Pr.196 setting	
	Positive logic	Negative logic
SAFE	80	180
SAFE2	81	181

*10 The use of the SAFE signal and SAFE2 signal has not been certified for compliance with safety standards.

For details, refer to the FR-E800 Instruction Manual (Functional Safety).

2.6.8 Safety communication function (Safety communication model)

This function is not available for the standard model and the Ethernet model.

◆ Outline

Mitsubishi Electric FR-E800-SCE general-purpose inverters have safety functions to stop the output to motors.

By connecting the inverter with a safety programmable controller with an Ethernet cable, signal input via communication is enabled.

◆ Wiring

The following describes terminals related to safety sub-functions.

Terminal symbol	Terminal function description
SX1	Terminal functions can be selected using Pr.S051 SX1/SX2 terminal function selection.
SX2	
SY1	Terminal functions can be selected using Pr.S055 SY1/SY2 terminal function selection.
SY2	
SD	Connect this terminal to the power supply common terminal of a transistor output (open collector output) device, such as a programmable controller, in the source logic to avoid malfunction by undesirable current.
	Common terminal for the 24 VDC power supply (terminal PC). Isolated from terminal 5.
PC	Common terminal for SX1 and SX2.
	Can be used as a 24 VDC 0.1 A power supply.
SC1	Common terminal for SY1 and SY2.
SC2	

◆ Connection diagram

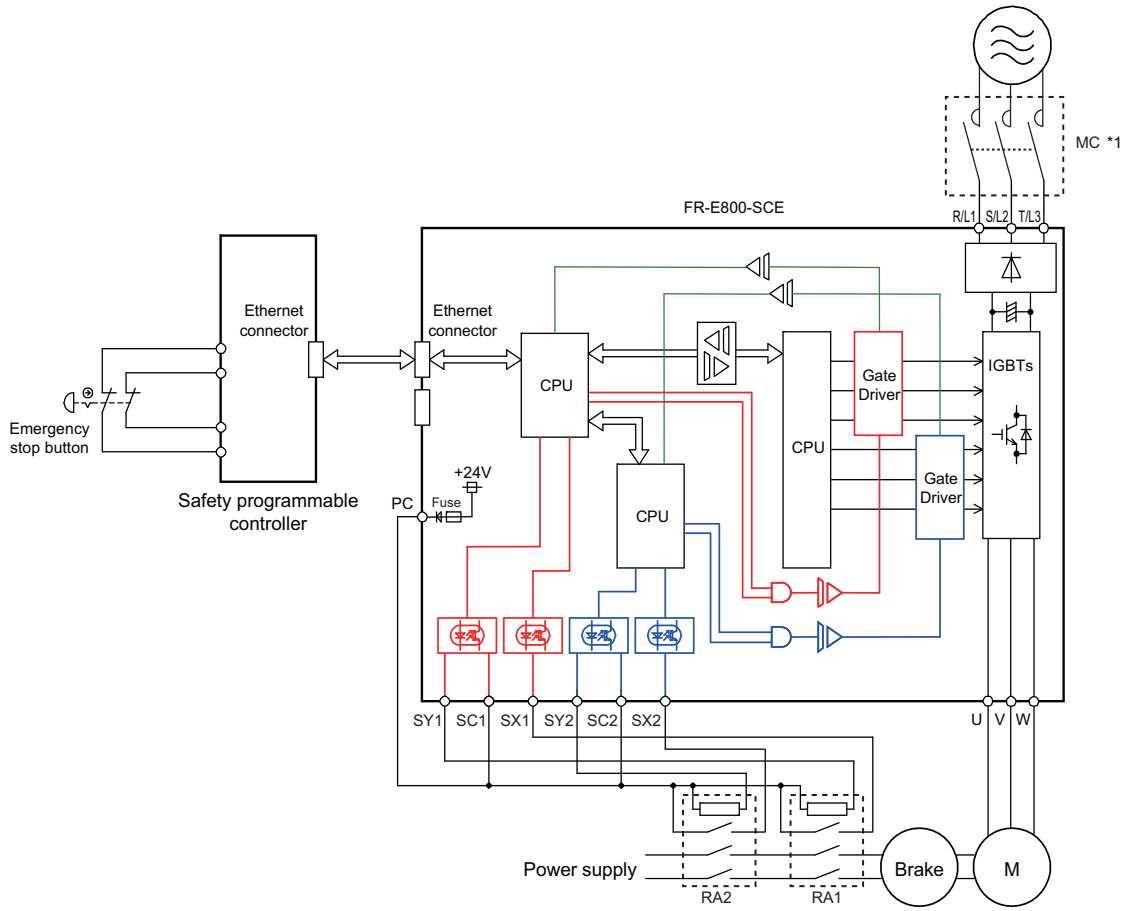

*1 To avoid an electric shock hazard, install a magnetic contactor (MC) at the input side of the inverter.

◆ Operation of the SA warning and the SAFE and SAFE2 signals

E.SAF indication*3	Status of safety related parts	STO function status when the STO or SS1 command is input	Inverter operating status	SA indication*4	Output signal*5*6*7	
					SAFE	SAFE2
Not displayed	Normal	STO disabled	Operation enabled	Not displayed	OFF	ON*1
		STO disabled*2	Output shutoff (Safe state)	Displayed	ON*1	ON*1

E.SAF indication*3	Status of safety related parts	STO function status when the STO or SS1 command is input	Inverter operating status	SA indication*4	Output signal*5*6*7	
					SAFE	SAFE2
Displayed	Fault	—	Output shutoff (Safe state)	Not displayed	OFF	OFF

*1 If any of the faults shown in the following table occurs, the SAFE signal and the SAFE2 signal are turned OFF.

Fault type	Operation panel indication
Option fault	E.OPT
Communication option fault	E.OP1
Internal storage device fault	E.PE6
Parameter storage device fault (control circuit board)	E.PE
Retry count excess	E.RET
Parameter storage device fault (main circuit board)	E.PE2
Safety circuit fault	E.SAF
Overspeed occurrence	E.OS

Fault type	Operation panel indication
Speed deviation excess detection	E.OSD
Signal loss detection	E.ECT
Excessive position fault	E.OD
Brake sequence fault	E.MB1 to E.MB7
Acceleration error	E.OA
CPU fault	E.CPU
	E.5 to E.7
Internal circuit fault	E.13

*2 When safety communication functions are enabled (**Pr.S002** ≠ "0"), the STO function is enabled while the safety communication is not established.

*3 If another fault occurs when the fault E.SAF occurs, the other fault indication may be displayed.

*4 If another warning occurs when the warning SA occurs, the other warning indication may be displayed.

*5 The ON/OFF state of the output signal is the one for the positive logic. In negative logic, the signal status is opposite.

*6 To assign the functions of the SAFE signal and SAFE2 signal to output terminals, set either value shown in the following table in **Pr.192 ABC terminal function selection**. To output the signal via communication, the function can be assigned also to **Pr.190 to Pr.196 (Output terminal function selection)** using communication protocols. For details, refer to the Instruction Manual (Communication) or the Instruction Manual of each communication option.

Output signal	Pr.190 to Pr.196 setting	
	Positive logic	Negative logic
SAFE	80	180
SAFE2	81	181

*7 The use of the SAFE signal and SAFE2 signal has not been certified for compliance with safety standards.

For details, refer to the FR-E800-SCE Instruction Manual (Functional Safety).

2.7 Connection to a motor with encoder (Vector control)

Using encoder-equipped motors together with a Vector control compatible option (FR-A8AP E kit) enables speed, torque, and position control operations under orientation control, encoder feedback control, and full-scale Vector control.
This section shows connection examples using the FR-A8AP E kit.

◆ Appearance and parts name of the FR-A8AP

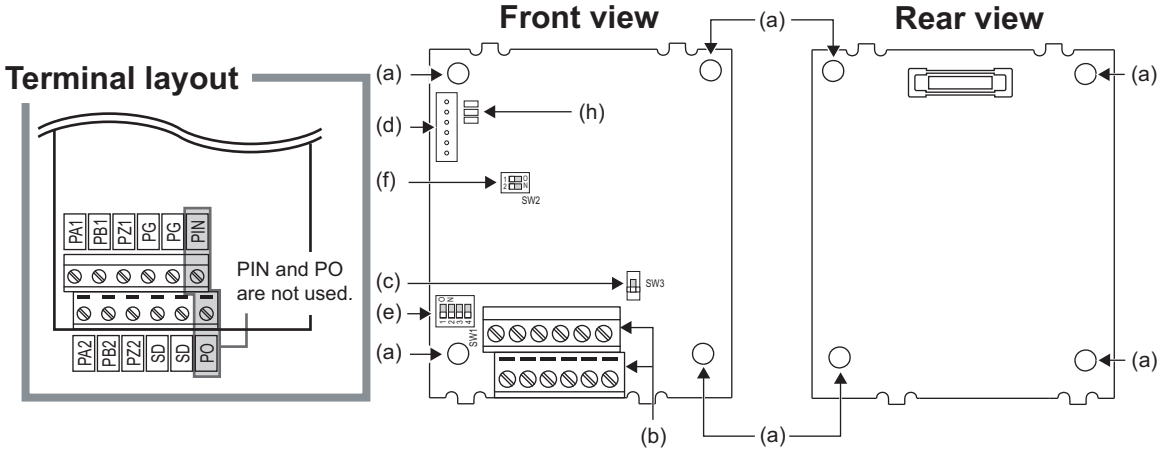

Symbol	Name	Description	Refer to page
(a)	Mounting hole	Used for installation to the inverter.	—
(b)	Terminal block	Connected with the encoder.	82
(c)	Encoder type selection switch (SW3)	Switches the encoder type (differential line driver/complementary).	79
(d)	CON2 connector	Not used.	—
(e)	Terminating resistor selection switches (SW1)	Switch ON or OFF the internal terminating resistor.	79
(f)	Switches (SW2) for manufacturer setting	Do not change the initial setting (both SW2-1 and SW2-2 switches: OFF).	—
(g)	Connector	Connected to the option connector of the inverter.	15
(h)	LED for manufacturer check	Not used.	—

◆ Terminals of the FR-A8AP

Terminal symbol	Terminal name	Description
PA1	Encoder A-phase signal input terminal	A-, B- and Z-phase signals are input from the encoder.
PA2	Encoder A-phase inverse signal input terminal	
PB1	Encoder B-phase signal input terminal	
PB2	Encoder B-phase inverse signal input terminal	
PZ1	Encoder Z-phase signal input terminal	
PZ2	Encoder Z-phase inverse signal input terminal	
PG	Encoder power supply (positive) input terminal	Input terminal for the encoder power supply. Connect the external power supply and the encoder power cable. When the encoder output is the differential line driver type, only 5 V can be input. Make the voltage of the external power supply the same as the encoder output voltage. (Check the encoder specification.)
SD	Encoder power supply ground terminal	
PIN	Not used.	
PO		

NOTE

- When the encoder's output voltage differs from its input power supply voltage, the signal loss detection (E.ECT) may occur.
- Incorrect wiring or faulty setting to the encoder will cause a fault such as an overcurrent (E.OC[ ]) and an inverter overload (E.THT). Correctly perform the encoder wiring and setting.

◆ Switches on the FR-A8AP

- Use the encoder type selection switch (SW3) to select the differential line driver or the complementary.
  It is initially set to the differential line driver. Switch its position according to the output circuit.

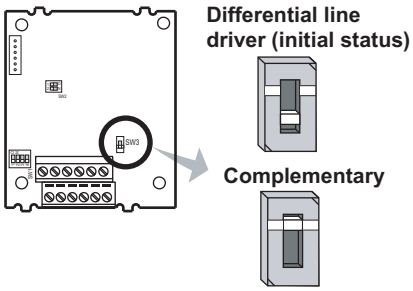

- Use the terminating resistor selection switches (SW1) to select ON/OFF of the internal terminating resistor.
  Set the switches ON (initial status) when an encoder output type is differential line driver, and set OFF when complementary.
  ON: With internal terminating resistor (initial status)
  OFF: Without internal terminating resistor

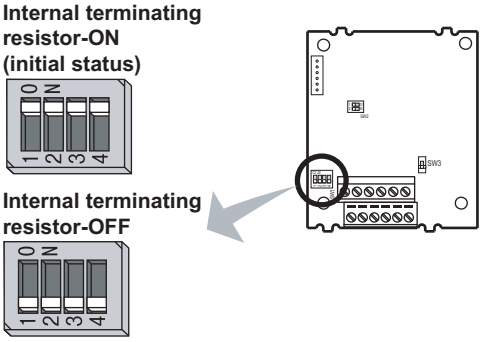

NOTE

- Set all switches to the same setting (ON/OFF).
- Set the switches OFF when sharing an encoder with another unit (CNC (computerized numerical controller), etc.) having a terminating resistor under the differential line driver setting.

- Motor and switch setting

Motor		Encoder type selection switch (SW3)	Terminating resistor selection switches (SW1)	Power supply specification *2
Mitsubishi Electric high-performance energy-saving motor with encoder	SF-PR-SC	Complementary	OFF	12 to 24 V
Mitsubishi Electric Vector control dedicated motor	SF-V5RU	Complementary	OFF	12 V
Mitsubishi Electric inverter-driven geared motor for encoder feedback control	GM-DZ GM-DP	Differential	ON	5 V
Mitsubishi Electric standard motor with encoder Mitsubishi Electric high-efficiency motor with encoder	SF-JR	Differential	ON	5 V
	SF-HR	Differential	ON	5 V
	Others	*1	*1	*1*3
Mitsubishi Electric constant-torque motor with encoder	SF-JRCA	Differential	ON	5 V
	SF-HRCA	Differential	ON	5 V
	Others	*1	*1	*1*3
Other manufacturer's motor with encoder		*1	*1	*1*3

*1 Set according to the motor (encoder).
*2 Prepare the power supply (5 V/12 V/15 V/24 V) for the encoder according to the encoder's output voltage.
*3 When the encoder output is the differential line driver type, only 5 V can be input.

NOTE

- The SW2 switches are for manufacturer setting. Do not change the setting.
- When the power supply of the inverter is turned OFF, also turn off the power supply of the encoder. Otherwise, the plug-in option may be damaged.

- Encoder specifications

Item	Encoder for SF-PR-SC and SF-V5RU	Encoder for GM-DZ, GM-DP, SF-JR, SF-HR, SF-JRCA, and SF-HRCA
Resolution	2048 pulses/rev	1024 pulses/rev
Power supply voltage	12 VDC ±10%, 24 VDC ±10%	5 VDC ±10%
Current consumption	150 mA	150 mA
Output signal form	Phase A and Phase B: 90 degrees out of phase, Phase Z: 1 pulse/rev	Phase A and Phase B: 90 degrees out of phase, Phase Z: 1 pulse/rev
Output circuit	Complementary	Differential line driver AM26LS31 equivalent
Output voltage	H level: (Power supply for encoder - 3 V) or more, L level: 3 V or less	H level: 2.4 V or more, L level: 0.5 V or less

◆ Encoder cable

■ SF-PR-SC/SF-V5RU with encoder

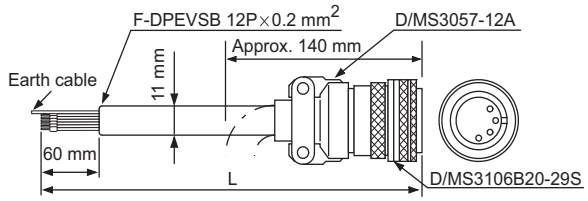

A P-clip for earthing (grounding) a shielded cable is provided.

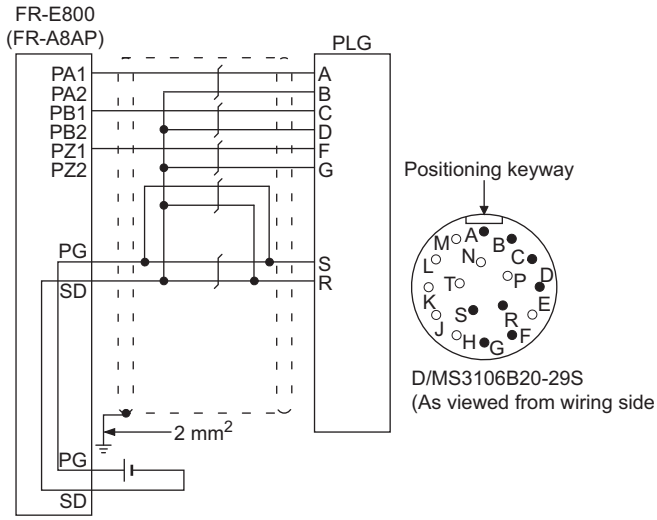

Model	Length L (m)
FR-V7CBL5	5
FR-V7CBL15	15
FR-V7CBL30	30

■ GM-DZ/GM-DP/SF-JR/SF-HR/SF-JRCA/SF-HRCA with encoder

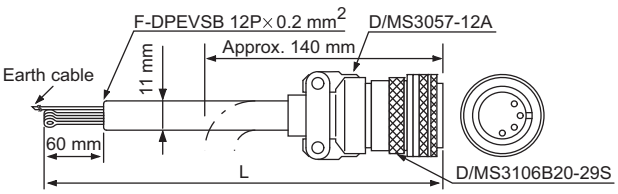

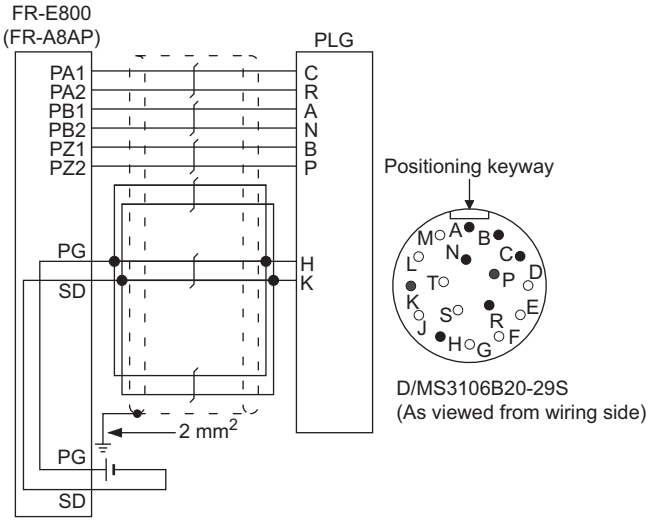

Model	Length L (m)
FR-JCBL5	5
FR-JCBL15	15
FR-JCBL30	30

- When using an encoder cable (FR-JCBL, FR-V5CBL, etc.) dedicated to the conventional motor, the cables need to be treated as the terminal block of the FR-A8AP is an insertion type. Cut the crimp terminal of the encoder cable and strip its sheath to make its cable wires loose. Also, treat the shielding wires of the shielded twisted pair cable to ensure that they do not contact conductive areas.
  Twist the stripped end of wires to prevent them from fraying. Do not solder them.

NOTE

- Information on crimp terminals
  Commercially available products (as of October 2020)
  Phoenix Contact Co., Ltd.

Terminal screw size	Wire gauge (mm^2)	Ferrule terminal model		Crimping tool model No.
		With insulation sleeve	Without insulation sleeve	
M2	0.3	AI 0,34-6TQ	A 0,34-7	CRIMPFOX 6
	0.5	AI 0,5-6WH	A 0,5-6	

NICHIFU Co., Ltd.

Terminal screw size	Wire gauge (mm^2)	Blade terminal part No.	Insulation cap part No.	Crimping tool model No.
M2	0.3 to 0.75	BT 0.75-7	VC 0.75	NH 69

- When using a blade terminal (without insulation sleeve), take caution that the twisted wires do not come out.

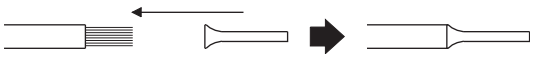

- Connection terminal compatibility table

Motor		SF-PR-SC, SF-V5RU	GM-DZ, GM-DP, SF-JR, SF-HR, SF-JRCA, SF-HRCA (with encoder)
Encoder cable		FR-V7CBL	FR-JCBL
FR-A8AP terminal	PA1	PA	PA
	PA2	Do not connect anything to this.	PAR
	PB1	PB	PB
	PB2	Do not connect anything to this.	PBR
	PZ1	PZ	PZ
	PZ2	Do not connect anything to this.	PZR
	PG	PG	5E
	SD	SD	AG2

◆ Wiring examples (standard models)

- Speed control

Vector control dedicated motor (SF-PR-SC or SF-V5RU), 12 V complementary	Standard motor with encoder (GM-DZ, GM-DP, SF-JR, SF-HR, SF-JRCA, or SF-HRCA), 5 V differential line driver
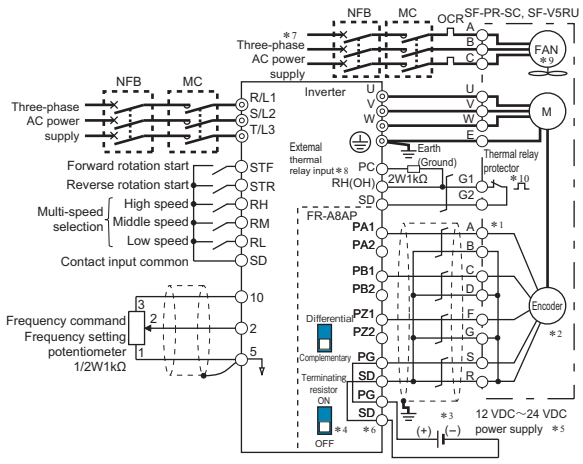	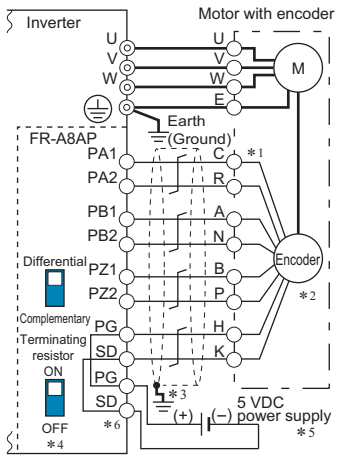

- Torque control

Vector control dedicated motor (SF-PR-SC or SF-V5RU), 12 V complementary	Standard motor with encoder (GM-DZ, GM-DP, SF-JR, SF-HR, SF-JRCA, or SF-HRCA), 5 V differential line driver
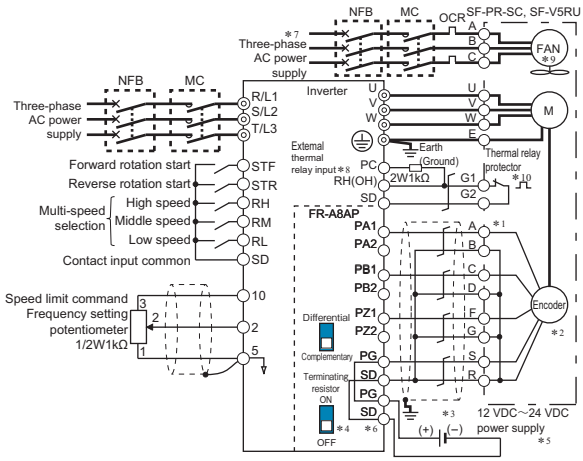	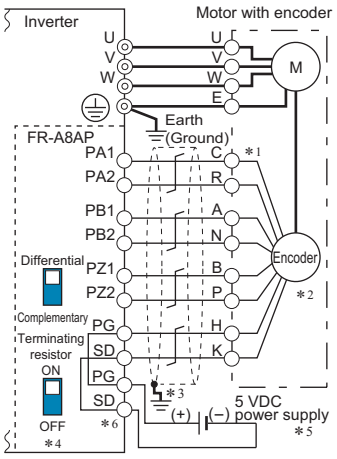

- Position control

Vector control dedicated motor (SF-PR-SC or SF-V5RU), 12 V complementary	Standard motor with encoder (GM-DZ, GM-DP, SF-JR, SF-HR, SF-JRCA, or SF-HRCA), 5 V differential line driver
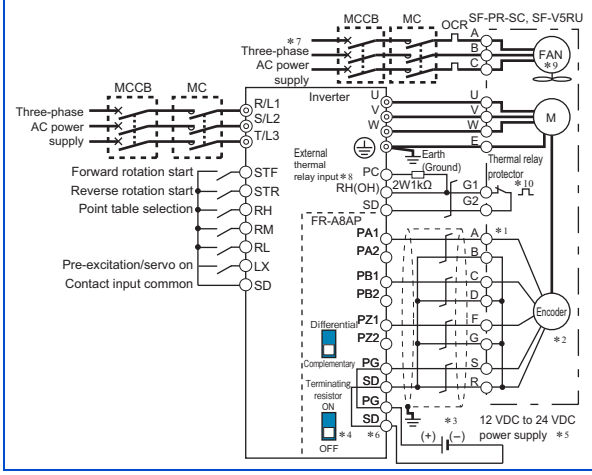	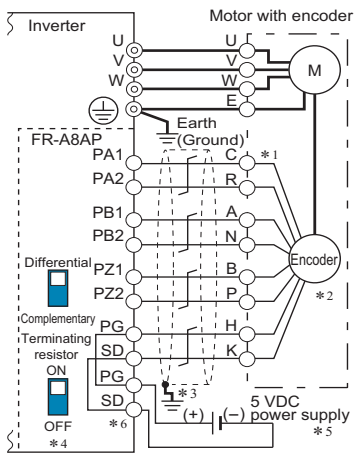

*1 The pin number differs according to the encoder used.
Speed and torque controls are available with or without the Z-phase being connected.

*2 Connect the encoder so that there is no looseness between the motor and motor shaft. Speed ratio must be 1:1.

*3 Earth (ground) the shield of the encoder cable to the enclosure using a tool such as a P-clip. (Refer to page 84.)

*4 For the complementary, set the terminating resistor selection switches in the OFF position. (Refer to page 79.)

*5 A separate external power supply is necessary according to the encoder power specification.
When the encoder output is the differential line driver type, only 5 V can be input.
Make the voltage of the external power supply the same as the encoder output voltage, and connect the external power supply between terminals PG and SD.

*6 For terminal compatibility of the FR-JCBL, FR-V7CBL, and FR-A8AP, refer to page 82.

*7 A single-phase power supply (200 V/50 Hz, 200 to 230 V/60 Hz) is used for the fan for the dedicated motor (SF-V5RU).

*8 Connect the recommended 2 W 1 kΩ resistor between terminals PC and OH. (Recommended product: MOS2C102J 2W1kΩ by KOA Corporation)
Insert the input line and the resistor to a 2-wire blade terminal, and connect the blade terminal to terminal OH. (For the recommended 2-wire blade terminals, refer to page 70.)
Remove jumpers connecting terminals PC and S1 and terminals PC and S2, and perform wiring as follows. Insulate the lead wire of the resistor, for example by applying a contraction tube, and shape the wires so that the resistor and its lead wire do not touch other cables. Caulk the lead wire securely together with the thermal protector input line using a 2-wire blade terminal. (Do not subject the lead wire's bottom area to an excessive pressure.)
The thermal protector can be connected to the standard model and the Ethernet model only.
To use a terminal as terminal OH, assign the OH (External thermal relay input) signal to an input terminal. (Set "7" in any of **Pr.178 to Pr.184**. For details, refer to the FR-E800 Instruction Manual (Function).)

When OH signal is assigned to terminal RH (**Pr.182** = “7”)

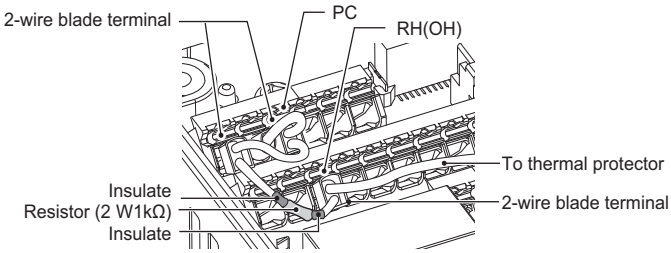

*9 The SF-PR-SC does not have a cooling fan.

*10 Some SF-PR-SC models have a thermal protector.

◆ Instructions for encoder cable wiring

- Use shielded twisted pair cables (0.2 mm^2 or larger) to connect the FR-A8AP. For the wiring to terminals PG and SD, use several cables in parallel or use a thick cable, according to the wiring length.
  To protect the cables from noise, run them away from any source of noise (such as the main circuit and power supply voltage).

Example of parallel connection with two cables (with complementary encoder output)

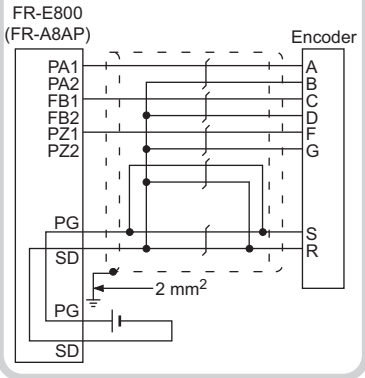

Wiring length	Parallel connection		Larger-size cable
Within 10 m	At least two cables in parallel	Wire gauge 0.2 mm^2	0.4 mm^2 or larger
Within 20 m	At least four cables in parallel		0.75 mm^2 or larger
Within 100 m*1	At least six cables in parallel		1.25 mm^2 or larger

*1 When differential line driver is set and a wiring length is 30 m or more.
The wiring length can be extended to 100 m by increasing the 5 V power supply (approximately to 5.5 V) while using six or more 0.2 mm^2 gauge cables in parallel or a 1.25 mm^2 or larger gauge cable. The voltage applied must be within power supply specifications of encoder.

- To reduce noise of the encoder cable, earth (ground) the encoder's shielded cable to the enclosure (as close as possible to the inverter) with a metal P-clip or U-clip.

Earthing (grounding) example using a P-clip

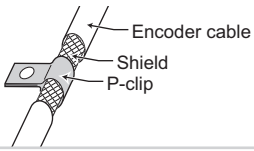

- When one encoder is shared between the FR-A8AP and CNC (computerized numerical controller), its output signal should be connected as follows. In this case, the wiring length between the FR-A8AP and CNC should be as short as possible, within 5 m.

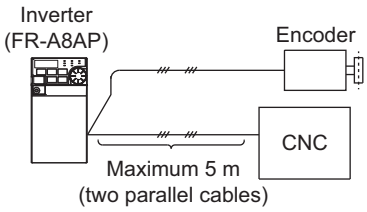

NOTE

- For the details of the optional encoder dedicated cable (FR-JCBL/FR-V7CBL), refer to page 80.
- The FR-V7CBL is provided with a P-clip for earthing (grounding) shielded cables.

2.8 Communication connectors and terminals

2.8.1 PU connector (Standard model)

◆ Mounting the operation panel on the enclosure surface

- Having an enclosure surface operation panel (FR-PA07) or a parameter unit on the enclosure surface is convenient. With a connection cable, the operation panel or the parameter unit can be mounted to the enclosure surface and connected to the inverter.
  To connect the FR-PA07 or the parameter unit to the inverter, use an option FR-CB2[], or a connector (RJ-45 connector) and cable (communication cable) available on the market.
  Securely insert one end of the cable into the PU connector and the other end into the connection connector on the parameter unit or the FR-ADP attached on the operation panel until the stoppers are fixed.

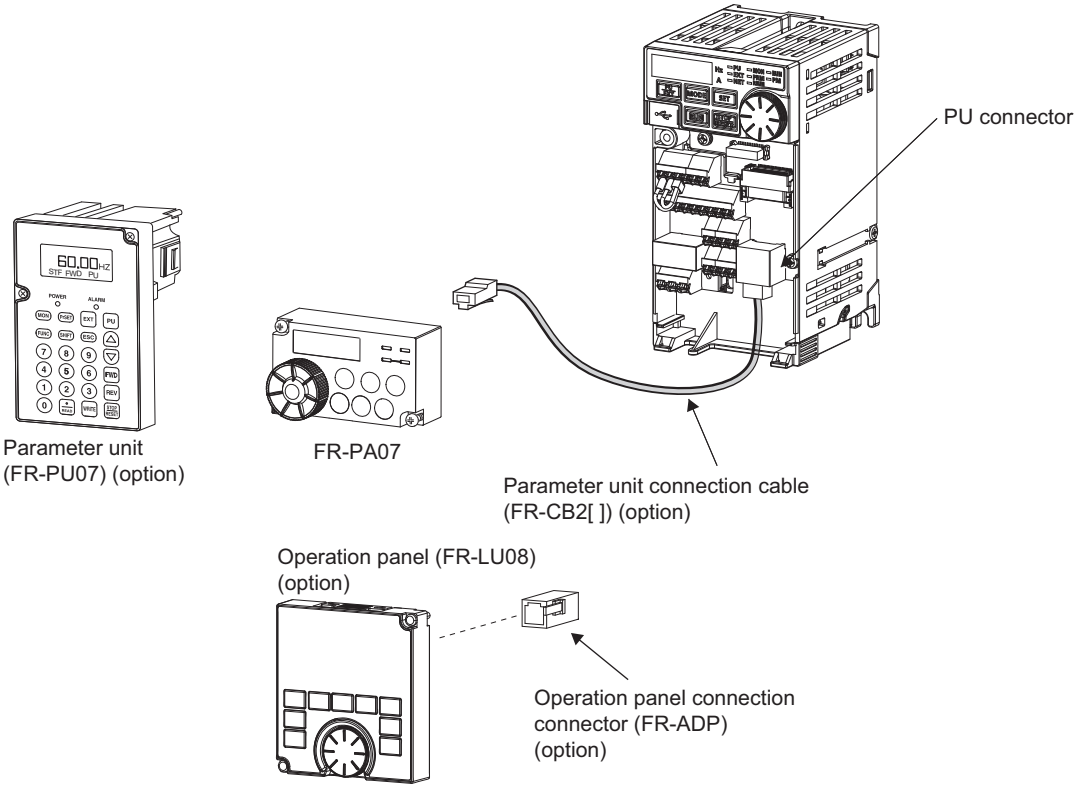

NOTE

- Refer to the following table when fabricating the cable on the user side. Keep the total cable length within 20 m.

Name	Remarks
Communication cable	Cable compliant with EIA-568 (such as 10BASE-T cable)

◆ Communication operation

- Using the PU connector as a computer network port enables communication operation from a personal computer, etc. When the PU connector is connected with a personal, FA or other computer by a communication cable, a user program can run to monitor the inverter or read and write parameters.
  Communication can be performed with the Mitsubishi inverter protocol (computer link operation) or the MODBUS RTU protocol.
  For details, refer to the FR-E800 Instruction Manual (Communication).

2.8.2 Ethernet connector (Ethernet model / Safety communication model)

◆ Ethernet communication specifications

Item	Description
Category	100BASE-TX/10BASE-T
Data transmission speed	100 Mbps (100BASE-TX) / 10 Mbps (10BASE-T)
Transmission method	Baseband
Maximum segment length	100 m between the hub and the inverter
Number of cascade connection stages	Up to 2 (100BASE-TX) / up to 4 (10BASE-T)
Topology	Line, star, or a combination of line and star
Interface	RJ-45
Number of interfaces available	2
IP version	IPv4

◆ Connection cable

Use Ethernet cables compliant with the following standards.

Ethernet cable	Connector	Standard
Category 5 or higher straight cable (double shielded / STP)	RJ-45 connector	The cables compliant with the following standards: • IEEE 802.3 (100BASE-TX) • ANSI/TIA/EIA-568-B (Category 5)

- Recommended products (as of October 2020)

Model	Manufacturer
SC-E5EW series*1	Mitsubishi Electric System & Service Co., Ltd.

*1 SC-E5EW cable is for in-enclosure use and indoor use for fixed parts, SC-E5EW-MV cable for indoor use for moving parts, and SC-E5EW-L cable for outdoor use.

NOTE

- Depending on the cable connector shape, the cable may not be connected to the inverter.

◆ Hubs

Use hubs that meet the following conditions. Operation is not guaranteed if the hubs do not meet these conditions.

- Compliance with the IEEE 802.3 (100BASE-TX)
- Support of the auto MDI/MDI-X function
- Support of the auto-negotiation function
- Switching hub (layer 2 switch)*1

*1 A repeater hub is not available.

NOTE

- Do not connect the FR-PA07, FR-LU08, FR-PU07, or any other operation panel or parameter unit to the Ethernet port. Doing so may damage the inverter.
- For CC-Link IE TSN communication, the hubs can be used only for connection with units compliant with the authentication class A.

◆ Wiring method

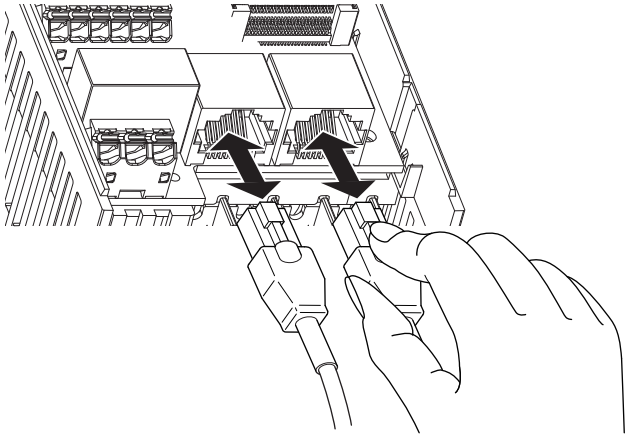

■ Connection

1. Turn OFF the power of the programmable controller and the inverter.
2. Remove the inverter front cover.
3. Check the orientation of the connectors. Insert the connector part of the Ethernet cable to the communication connector until it clicks.

■ Disconnection

1. Turn OFF the power of the programmable controller and the inverter.
2. Remove the inverter front cover.
3. Hold down the latch on the Ethernet cable connector, and pull out the cable while holding the latch.

◆ Wiring precautions

This section explains Ethernet cable connection and the relevant precautions.

■ Handling of the Ethernet cable

- Do not touch the conductors of the cable or the connector on the inverter. Keep the conductors free of dust or dirt. If oil from your hand, dirt or dust is attached to the core, it can increase transmission loss, arising a problem in data link.
- Check the following:
  Is any Ethernet cable disconnected?
  Is any of the Ethernet cables shorted?
  Are the connectors securely connected?
- Do not use Ethernet cables with broken latches. Doing so may cause the cable to unplug or malfunction.
- The maximum station-to-station distance is 100 m. However, the distance may be shorter depending on the operating environment of the cable. For details of the cable, contact your cable manufacturer.

■ Connecting and disconnecting of the Ethernet cable

Hold the connector part when connecting and disconnecting the Ethernet cable. Pulling a cable connected to the inverter may damage the inverter or cable, or result in malfunction due to poor contact.

■ Network configuration

Check the network configuration before wiring, and perform correct wiring.

◆ Communication operation

- Using the Ethernet connector as a computer network port enables communication operation from a computer. When the inverter is connected with a personal, FA or other computer by a communication cable, a user program can run to monitor the inverter or read and write parameters.
  For details, refer to the FR-E800 Instruction Manual (Communication).

2.8.3 USB connector

◆ USB device communication

The inverter can be connected to a computer with a USB (ver. 1.1) cable.

Parameter setting and monitoring can be performed by using FR Configurator2.

Interface	Conforms to USB1.1 (USB2.0 full speed)
Transmission speed	12 Mbps
Wiring length	Maximum 5 m
Connector	USB mini B connector (receptacle)
Power supply	Self-powered or bus power connection
Recommended USB cable	MR-J3USBCBL3M (cable length 3 m)

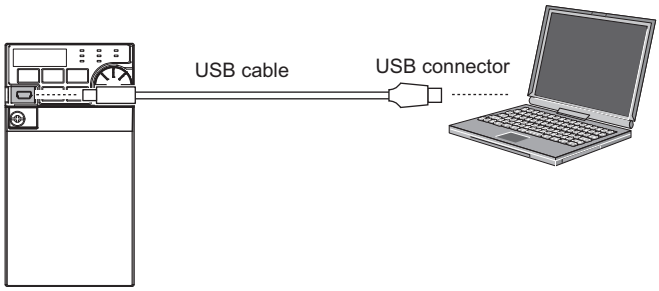

NOTE

- For the details of FR Configurator2, refer to the Instruction Manual of FR Configurator2.

◆ USB bus power

Via USB connection, power supply from a computer to the inverter and communication to use FR Configurator2 are enabled even while the inverter power is turned OFF. This will reduce the startup time.

■ Restrictions for using USB bus power

The following table shows availability of functions while power is supplied via USB connection. Note that some functions are restricted.

Item	Description	Remarks
Parameters (except for calibration parameters)	Reading a parameter value Writing a parameter value	Parameters for options can be read or written regardless of whether options are connected.
FM/AM calibration parameter (**Pr.900/ Pr.901**)	Setting (calibration) not available.	—
Calibration parameters **Pr.902 to Pr.905, Pr.932**, and **Pr.933**	Adjustment is available only when applying analog voltage (current) is not necessary.	—
Operation panel	Not available for operation. Only the PRM LED turns ON.	When power is supplied via main circuit terminals while the USB bus power is used, the operation panel will be reset automatically.
Fault	Partially supported.	
RS-485/Ethernet communication	Not guaranteed.	—

NOTE

- Availability of each parameter depends on the inverter model. For details, refer to the FR-E800 Instruction Manual (Function).
- Note that Ethernet communication may be disabled in the FR-E800-E inverter when turning OFF and turning ON the power supply is repeated while Ethernet communication and USB bus power connection are used at the same time. Disconnect the USB cable before turning OFF/ON the power supply.

2.9 Connection of stand-alone option units

The inverter accepts a variety of stand-alone option units as required.
Incorrect connection will cause inverter damage or accident. Connect and operate the option unit carefully in accordance with the Instruction Manual of the corresponding option unit.

2.9.1 Connection of the brake resistor (FR-E820-0030(0.4K) or higher, FR-E840-0016(0.4K) or higher, and FR-E820S-0030(0.4K) or higher)

- Install a dedicated brake resistor (MRS, MYS, or FR-ABR) outside when the motor driven by the inverter is made to run by the load, quick deceleration is required, etc. Connect the brake resistor (MRS, MYS, or FR-ABR) to terminals P/+ and PR. (For the locations of terminals P/+ and PR, refer to the terminal block layout (page 51).)
  Set parameters as follows.

Connected brake resistor	Setting of Pr.30 Regenerative function selection	Setting of Pr.70 Special regenerative brake duty
MRS, MYS	0 (initial value)	—
MYS used at 100% torque / 6%ED	1	6%
FR-ABR	1	10%

FR-E820-0030(0.4K) to 0050(0.75K), FR-E820S-0030(0.4K)	FR-E820-0080(1.5K) to 0175(3.7K) FR-E840-0016(0.4K) to 0095(3.7K) FR-E820S-0050(0.75K) to 0110(2.2K)
Connect a brake resistor across terminals P/+ and PR. 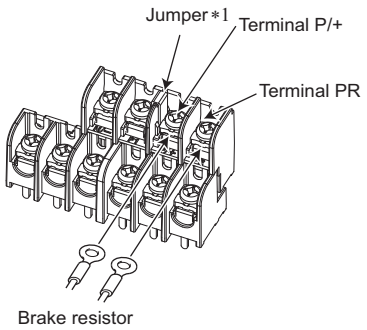 	Connect a brake resistor across terminals P/+ and PR. 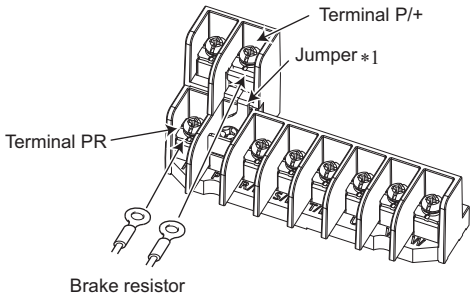

FR-E820-0240(5.5K), 0330(7.5K)	FR-E840-5.5K(0120), 7.5K(0170)
Connect a brake resistor across terminals P/+ and PR. 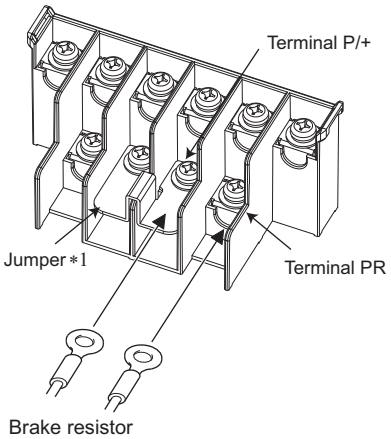 	Connect a brake resistor across terminals P/+ and PR. 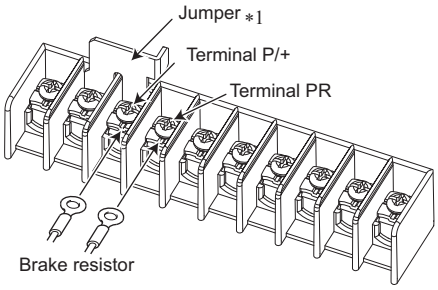

FR-E820-0470(11K), FR-E820-0600(15K)	FR-E840-0230(11K), FR-E840-0300(15K)
Connect a brake resistor across terminals P/+ and PR. 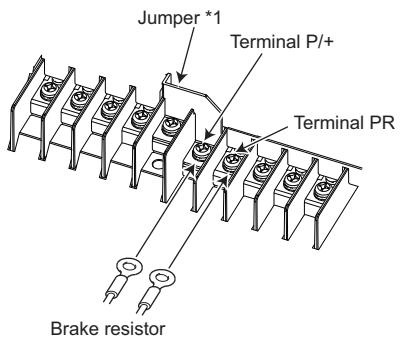	Connect a brake resistor across terminals P/+ and PR. 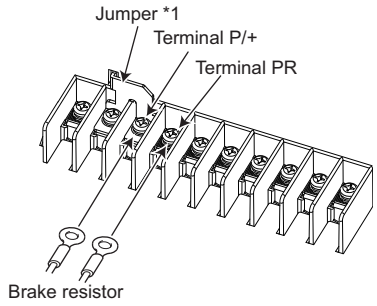

FR-E820-0760(18.5K), FR-E820-0900(22K) FR-E840-0380(18.5K), FR-E840-0440(22K)
Connect a brake resistor across terminals P/+ and PR. 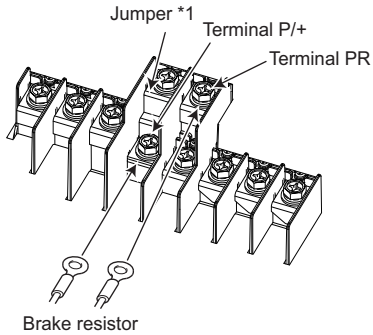

*1 Do not remove the jumper across terminals P/+ and P1 except when connecting a DC reactor (FR-HEL).

NOTE

- A brake resistor cannot be used with options such as brake units, high power factor converters, and multifunction regeneration converters.

◆ Connecting the MRS or MYS brake resistor or the FR-ABR high-duty brake resistor

It is recommended to configure a sequence, which shuts off power on the input side of the inverter by the external thermal relay as follows, to prevent overheat and burnout of the brake resistor (MRS, MYS) or the high duty brake resistor (FR-ABR) in case the regenerative brake transistor is damaged. (Not available for FR-E820(S)-0008(0.1K) and FR-E820(S)-0015(0.2K).)

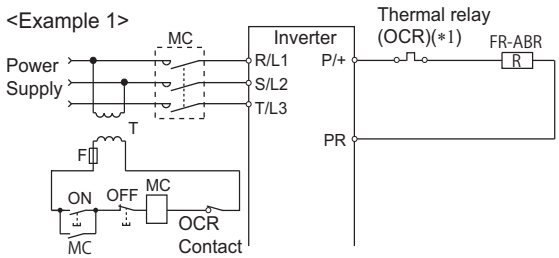

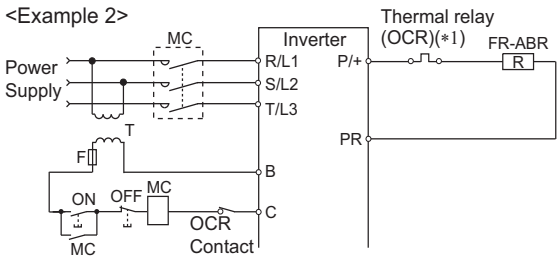

*1 Refer to the following table for the thermal relay models for each capacity. Refer to the following diagram for the connection.

Power supply voltage	Brake resistor	Thermal relay model (Mitsubishi Electric product)	Rated operating current
200 V	MRS120W200	TH-T25-0.7A	120 VAC: 2 A (NO contact) / 3 A (NC contact), 240 VAC: 1 A (NO contact) / 2 A (NC contact) (AC15 class) 110 VDC: 0.2 A, 220 VDC: 0.1 A (DC13 class)
	MRS120W100	TH-T25-1.3A	
	MRS120W60	TH-T25-2.1A	
	MRS120W40	TH-T25-3.6A	
	MYS220W50 (two in parallel)	TH-T25-5A	

Power supply voltage	High-duty brake resistor	Thermal relay model (Mitsubishi electric product)	Rated operating current
200 V	FR-ABR-0.4K	TH-T25-0.7A	120 VAC: 2 A (NO contact) / 3 A (NC contact), 240 VAC: 1 A (NO contact) / 2 A (NC contact) (AC15 class) 110 VDC: 0.2 A, 220 VDC: 0.1 A (DC13 class)
	FR-ABR-0.75K	TH-T25-1.3A	
	FR-ABR-2.2K	TH-T25-2.1A	
	FR-ABR-3.7K	TH-T25-3.6A	
	FR-ABR-5.5K	TH-T25-5A	
	FR-ABR-7.5K	TH-T25-6.6A	
	FR-ABR-11K	TH-T25-11A	
	FR-ABR-15K	TH-T25-11A	
	FR-ABR-22K	TH-T65-22A	
400 V	FR-ABR-H0.4K	TH-T25-0.24A	
	FR-ABR-H0.75K	TH-T25-0.35A	
	FR-ABR-H1.5K	TH-T25-0.9A	
	FR-ABR-H2.2K	TH-T25-1.3A	
	FR-ABR-H3.7K	TH-T25-2.1A	
	FR-ABR-H5.5K	TH-T25-2.5A	
	FR-ABR-H7.5K	TH-T25-3.6A	
	FR-ABR-H11K	TH-T25-6.6A	
	FR-ABR-H15K	TH-T25-6.6A	
	FR-ABR-H22K	TH-T25-9A	

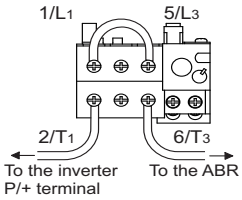

NOTE

- Do not use the brake resistor (MRS type, MYS type) with a lead wire extended.
- Do not connect a resistor to terminals P/+ and N/-. Doing so may cause a fire.

◆ Connection of a brake resistor other than the FR-ABR

Use a brake resistor that has resistance and power consumption values higher than the following. Also, the brake resistor must have a sufficient capacity to consume the regenerative power.

Voltage class	Inverter	Minimum resistance (Ω)	Power consumption (kW)
Three-phase 200 V class	FR-E820-0030(0.4K)*1	100	1.5
	FR-E820-0050(0.75K)*1	80	1.9
	FR-E820-0080(1.5K)	60	2.5
	FR-E820-0110(2.2K)	60	2.5
	FR-E820-0175(3.7K)	40	3.8
	FR-E820-0240(5.5K)	25	6.1
	FR-E820-0330(7.5K)	20	7.6
	FR-E820-0470(11K)	13	11.7
	FR-E820-0600(15K)	9	16.9
	FR-E820-0760(18.5K)	6.5	23.4
	FR-E820-0900(22K)	6.5	23.4
Three-phase 400 V class	FR-E840-0016(0.4K)	371	1.6
	FR-E840-0026(0.75K)	236	2.4
	FR-E840-0040(1.5K)	205	2.8
	FR-E840-0060(2.2K)	180	3.2
	FR-E840-0095(3.7K)	130	4.4
	FR-E840-0120(5.5K)	94	6.1
	FR-E840-0170(7.5K)	67	8.6
	FR-E840-0230(11K)	49	11.8
	FR-E840-0300(15K)	36	16.0
	FR-E840-0380(18.5K)	26	22.2
	FR-E840-0440(22K)	26	22.2
Single-phase 200 V class	FR-E820S-0030(0.4K)*1	100	1.5
	FR-E820S-0050(0.75K)*1	80	1.9
	FR-E820S-0080(1.5K)	60	2.5
	FR-E820S-0110(2.2K)	60	2.5

*1 The resistance should be 200 Ω or more at 100% ED. The following shows the brake duty when the resistance is less than 200 Ω.

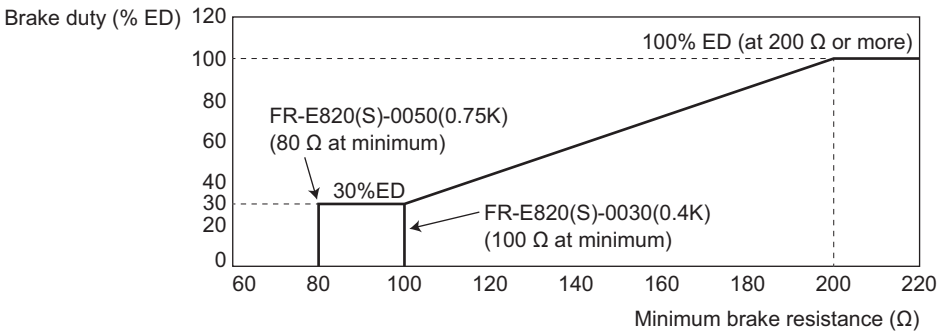

Set parameters as follows:

- **Pr.30 Regenerative function selection** = "1"
- Set **Pr.70 Special regenerative brake duty** according to the amount and frequency of the regenerative driving, and make sure that the resistor can consume the regenerative power properly. (Refer to the FR-E800 Instruction Manual (Function).)

- When the regenerative brake transistor is damaged, install a thermal relay as shown in the following sequence to prevent overheat and burnout of the brake resistor. Properly select a thermal relay according to the regenerative driving frequency or the rated power or resistance of the brake resistor.

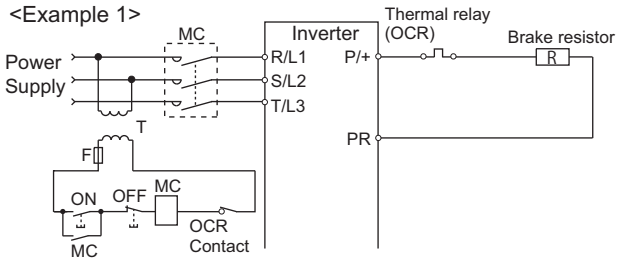

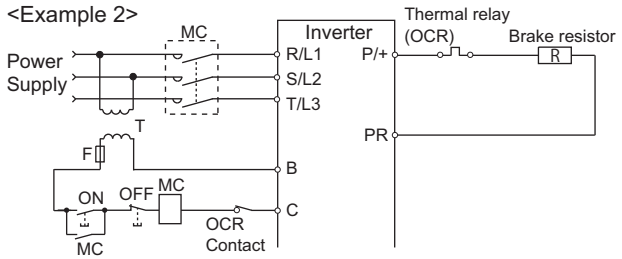

⚠CAUTION

- If the resistor selection is incorrect, overcurrent may damage the inverter built-in brake transistor. Besides, the resistor may be burned due to overheat.
- If the selection of the thermal relay is incorrect, the resistor may be burned due to overheat.

2.9.2 Connection of the brake unit (FR-BU2)

Connect the brake unit (FR-BU2(-H)) as follows to improve the braking capability during deceleration.

◆ Connection example with the GRZG type discharging resistor

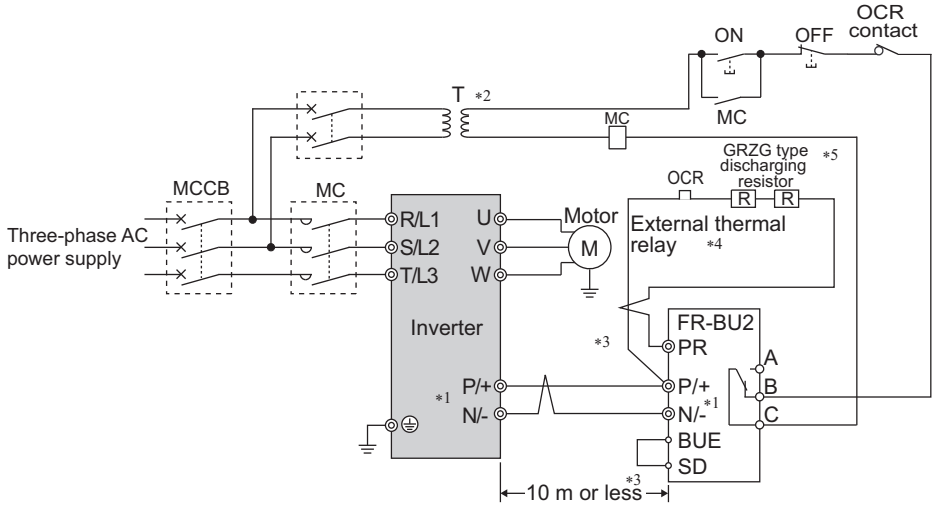

*1 When wiring, make sure to match the terminal symbols (P/+, N/-) on the inverter and on the brake unit (FR-BU2). (Incorrect connection will damage the inverter and brake unit.)
*2 When the power supply is 400 V class, install a stepdown transformer.
*3 The wiring distance between the inverter, brake unit (FR-BU2) and discharging resistor must be within 5 m. When using twisted pair cable, use the cable within 10 m.
*4 It is recommended to install an external thermal relay to prevent overheat of the discharging resistor.
*5 For the connection method of the discharging resistor, refer to the Instruction Manual of the FR-BU2.

- Recommended external thermal relay

brake unit	Discharging resistor	Recommended external thermal relay
FR-BU2-1.5K	GZG 300W-50Ω (one)	TH-T25 1.3A
FR-BU2-3.7K	GRZG 200-10Ω (three in series)	TH-T25 3.6A
FR-BU2-7.5K	GRZG 300-5Ω (four in series)	TH-T25 6.6A
FR-BU2-15K	GRZG 400-2Ω (six in series)	TH-T25 11A
FR-BU2-H7.5K	GRZG 200-10Ω (six in series)	TH-T25 3.6A
FR-BU2-H15K	GRZG 300-5Ω (eight in series)	TH-T25 6.6A
FR-BU2-H30K	GRZG 400-2Ω (twelve in series)	TH-T25 11A

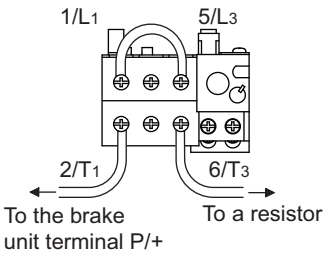

NOTE

- Set "1" in **Pr.0 Brake mode selection** in the FR-BU2 to use a GRZG type discharging resistor.
- Do not remove the jumper across terminals P/+ and P1 except when connecting a DC reactor (FR-HEL).

◆ Connection example with the FR-BR(-H) resistor unit

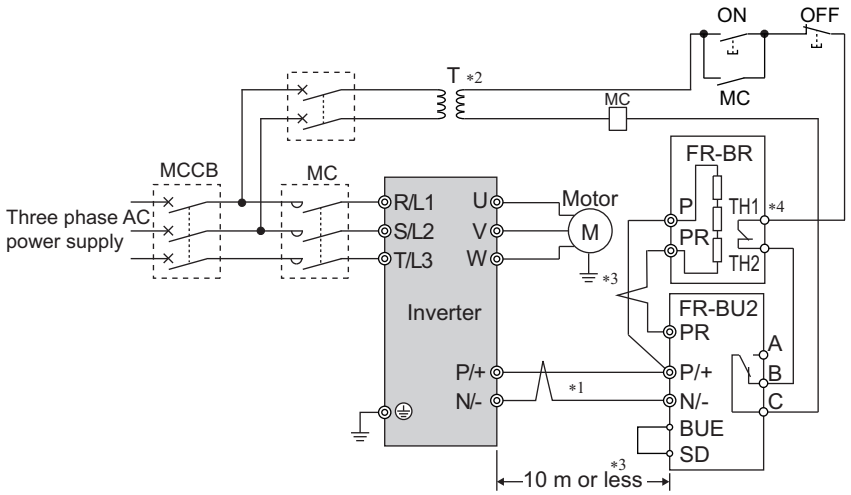

*1 When wiring, make sure to match the terminal symbols (P/+, N/-) on the inverter and on the brake unit (FR-BU2). (Incorrect connection will damage the inverter and brake unit.)

*2 When the power supply is 400 V class, install a stepdown transformer.

*3 The wiring distance between the inverter, brake unit (FR-BU2) and resistor unit (FR-BR) must be within 5 m. When using twisted pair cable, use the cable within 10 m.

*4 The contact between TH1 and TH2 is closed in the normal status and is open at a fault.

NOTE

- Do not remove the jumper across terminals P/+ and P1 except when connecting a DC reactor (FR-HEL).

2.9.3 Connection of the high power factor converter (FR-HC2) (Standard model / Ethernet model)

When connecting the high power factor converter (FR-HC2) to suppress power harmonics, perform wiring securely as follows. Incorrect connection will damage the high power factor converter and the inverter.

After making sure that the wiring is correct and secure, set the rated motor voltage in **Pr.19 Base frequency voltage** (under V/F control) or **Pr.83 Rated motor voltage** (under other than V/F control) and set "0 (initial value)" or "2" (when the automatic restart after instantaneous power failure is selected) in **Pr.30 Regenerative function selection**. (Refer to the FR-E800 Instruction Manual (Function).)

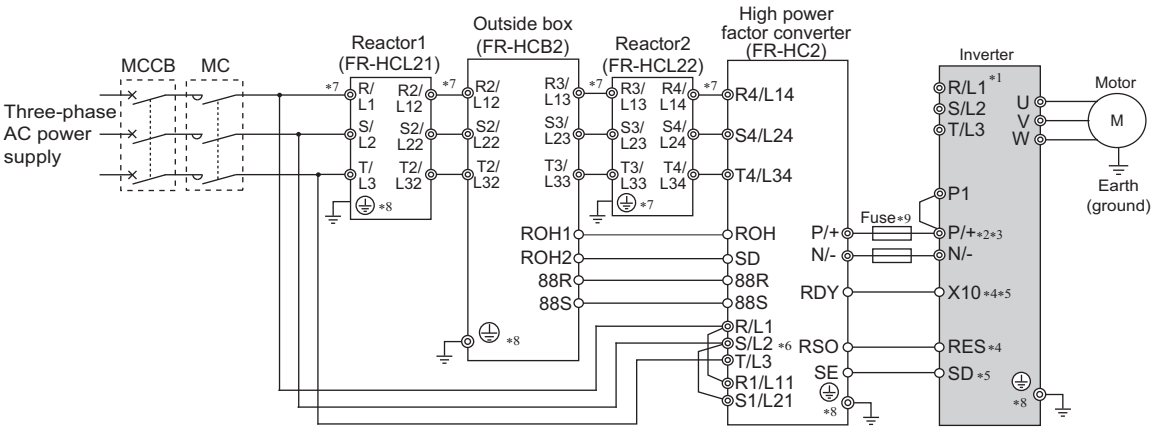

*1 Do not connect anything to power input terminals (R/L1, S/L2, and T/L3). Incorrect connection will damage the inverter.

*2 Do not install an MCCB across terminals P/+ and N/- (between terminals P and P/+ or between terminals N and N/-). Connecting the opposite polarity of terminals N/- and P/+ will damage the inverter.

*3 Use **Pr.178 to Pr.182 (Input terminal function selection)** to assign the terminals used for the X10 and RES signals. (Refer to the FR-E800 Instruction Manual (Function).)

*4 Always connect terminal RDY on the FR-HC2 to a terminal where the X10 signal or MRS signal is assigned on the inverter. Always connect terminal SE on the FR-HC2 to terminal SD on the inverter. Not connecting these terminals may damage the FR-HC2.

*5 Always connect terminals R/L1, S/L2, and T/L3 on the FR-HC2 to the power supply. Operating the inverter without connecting them will damage the FR-HC2.

*6 Do not install an MCCB or MC across terminals (R/L1, S/L2, T/L3) on the reactor 1 and terminals (R4/L14, S4/L24, T4/L34) on the FR-HC2. Doing so disrupts proper operation.

*7 Securely perform grounding (earthing) by using the grounding (earthing) terminal.

*8 Installation of a fuse is recommended. (Refer to the Instruction Manual of the FR-HC2.)

NOTE

- The safety communication model (FR-E800-SCE) is not intended for the use with the high power factor converter (FR-HC2).
- The voltage phases of terminals R/L1, S/L2, and T/L3 and the voltage phases of terminals R4/L14, S4/L24, and T4/L34 must be matched.
- The control logic (sink logic/source logic) of the high power factor converter and the inverter must be matched. (Refer to page 67.)
- Do not connect a DC reactor (FR-HEL) to the inverter when the FR-HC2 is connected.

⚠CAUTION

- Always connect terminal RDY on the FR-HC2 to a terminal where the X10 signal or MRS signal is assigned on the inverter. Always connect terminal SE on the FR-HC2 to terminal SD on the inverter. Not connecting these terminals may damage the FR-HC2.

2.9.4 Connection of the multifunction regeneration converter (FR-XC) (Standard model / Ethernet model)

When connecting the multifunction regeneration converter (FR-XC) to improve the braking capability, perform wiring securely as follows. Failure to do so will damage the converter and the inverter.

Turn ON switch 1 in the function selection switch assembly (SW2). If the switch setting does not match the actual wiring, the connection mode fault "E.T" occurs. Set "0" in **Pr.416** of the FR-XC converter.

After making sure that the wiring is correct and secure,

set "0" or "2" (when the automatic restart after instantaneous power failure is selected) in **Pr.30 Regenerative function selection**, and set "0" in **Pr.70 Special regenerative brake duty**. (Refer to the FR-E800 Instruction Manual (Function).)

◆ Common bus regeneration mode with harmonic suppression disabled (Pr.416 = "0")

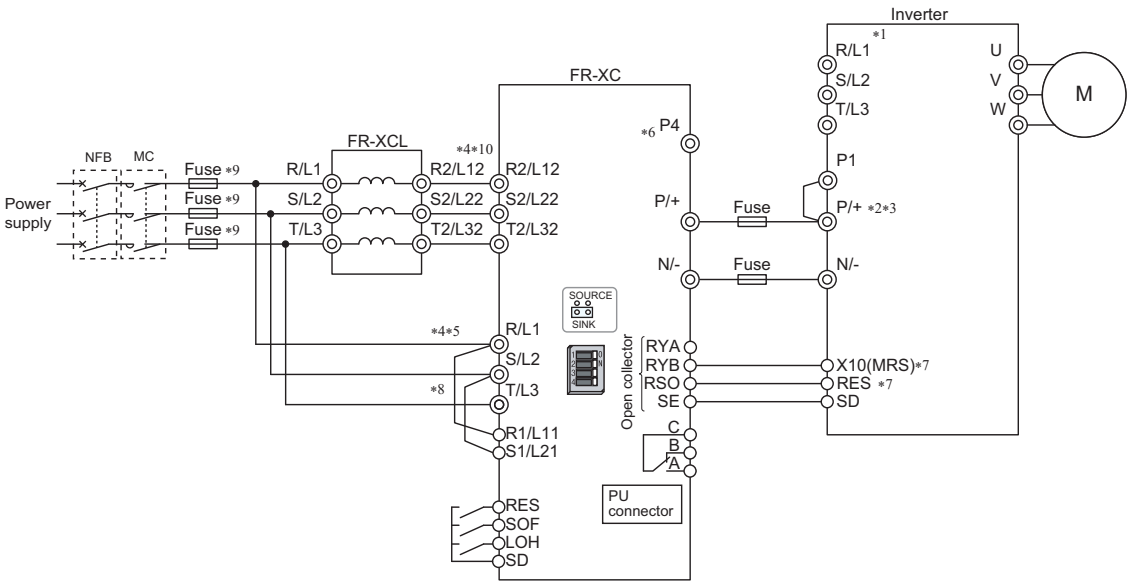

*1 Never connect the power supply to terminals R/L1, S/L2, and T/L3 on the inverter. Doing so will damage the inverter and the converter.

*2 When the FR-XC is connected, the jumper across terminals P/+ and P1 does not affect the function. (The FR-XC can be connected with the jumper connected.)
*3 Connect between the inverter terminal P/+ and the converter terminal P/+ and between the inverter terminal N/- and the converter terminal N/- for polarity consistency. Failure to do so will damage the converter and the inverter.
*4 Confirm the correct phase sequence of three-phase current to connect between the reactor and the converter, and between the power supply and terminals R/L1, S/L2, and T/L3. Failure to do so will damage the converter.
*5 Be sure to connect the power supply and terminals R/L1, S/L2, and T/L3 of the converter. Operating the inverter without connecting them will damage the converter.
*6 Do not connect anything to terminal P4.
*7 Assign the X10 signal to any of the input terminals.
*8 To use separate power supply for the control circuit, remove each jumper at terminal R1/L11 and terminal S1/L21.
*9 Install UL listed fuses on the input side of the reactor to meet the UL/cUL standards (refer to the FR-XC Instruction Manual for information about the fuse).
*10 Do not install an MCCB or MC between the reactor and the converter. Doing so disrupts proper operation.

⚠ CAUTION

- In the common bus regeneration mode, always connect between the converter terminal RYB and the inverter terminal to which the X10 (MRS) signal is assigned and between the converter terminal SE and the inverter terminal SD. Failure to do so will damage the converter.

NOTE

- Configure a system so that the magnetic contactor at the converter input side shuts off the power supply at a failure of the converter or the connected inverter. (The converter does not shut off the power supply by itself.) Failure to do so may overheat and burn the resistors in the converter and the connected inverter.
- The safety communication model (FR-E800-SCE) is not intended for the use with the multifunction regeneration converter (FR-XC) except when the converter is used in power regeneration mode.
- For details on model selection and connection, refer to the FR-XC Instruction Manual.
- For details on connection in common bus regeneration mode with harmonic suppression enabled or in power regeneration mode 2, refer to the FR-XC Instruction Manual.

2.9.5 Connection of the power regeneration common converter (FR-CV) (Standard model / Ethernet model)

When wiring for connecting the power regeneration common converter (FR-CV) to the inverter, make sure to match the terminal symbols (P/+, N/-) on the inverter and on the power regeneration common converter.

After making sure that the wiring is correct and secure, set "0 (initial value)" or "2" (when the automatic restart after instantaneous power failure is selected) in **Pr.30 Regenerative function selection**. (Refer to the FR-E800 Instruction Manual (Function).)

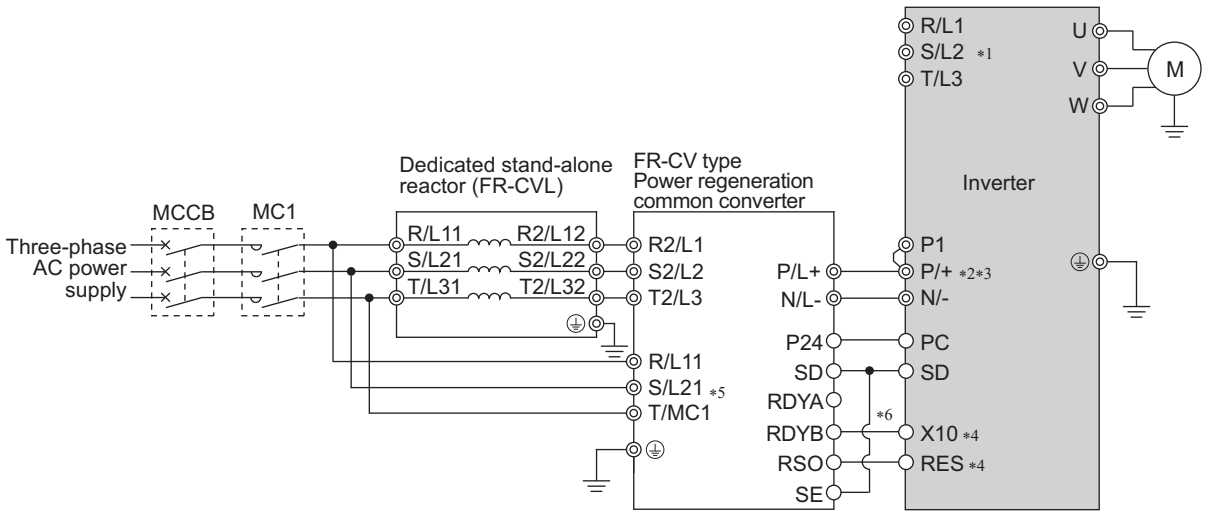

*1 Do not connect anything to power input terminals (R/L1, S/L2, and T/L3). Incorrect connection will damage the inverter. (The E.OPT fault (Option fault) occurs. Refer to the FR-E800 Instruction Manual (Maintenance).)
*2 When the FR-CV is connected, the jumper across terminals P/+ and P1 does not affect the function. (The FR-CV can be connected with the jumper connected.)

*3 Do not install an MCCB across terminals P/+ and N/- (between terminals P/L+ and P/+ or between N/L- and N/-). Connecting the opposite polarity of terminals N/- and P/+ will damage the inverter.

*4 Use **Pr.178 to Pr.182 (Input terminal function selection)** to assign the terminals used for the X10 signal. (Refer to the FR-E800 Instruction Manual (Function).)

*5 Be sure to connect the power supply and terminals R/L11, S/L21, and T/MC1. Operating the inverter without connecting them will damage the power regeneration common converter.

*6 Always connect terminal RDYB on the FR-CV to a terminal where the X10 signal or MRS signal is assigned on the inverter. Always connect terminal SE on the FR-CV to terminal SD on the inverter. Not connecting these terminals may damage the FR-CV.

NOTE

- The safety communication model (FR-E800-SCE) is not intended for the use with the power regeneration common converter (FR-CV).
- The voltage phases of terminals R/L11, S/L21, and T/MC1 and the voltage phases of terminals R2/L1, S2/L2, and T2/L3 must be matched.
- Use the sink logic when the FR-CV is connected. It cannot be connected when the source logic is selected.
- Do not connect a DC reactor (FR-HEL) to the inverter when the FR-CV is connected.

2.9.6 Connection of the DC reactor (FR-HEL)

- Keep the surrounding air temperature within the permissible range (-10 to +50°C). Keep enough clearance around the reactor because it heats up. (Take 10 cm or more clearance on top and bottom and 5 cm or more on left and right regardless of the installation direction.)

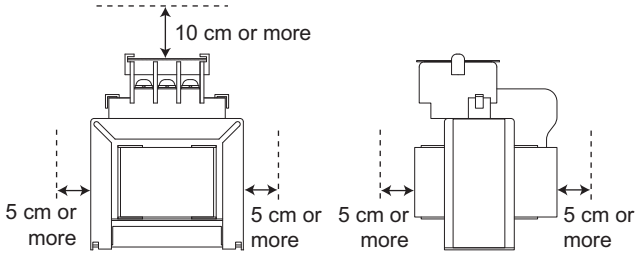

- When using the DC reactor (FR-HEL), connect it to terminals P/+ and P1.
  In this case, the jumper connected across terminals P/+ and P1 must be removed. Otherwise, the reactor will not be effective.

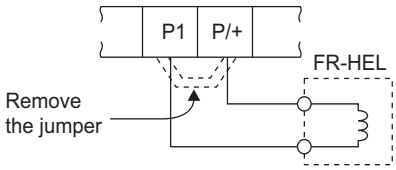

- Select a DC reactor according to the applied motor capacity. (Refer to page 120.)
- Since the DC reactor (FR-HEL) is electrically connected to the enclosure through mounting screws, the DC reactor is earthed (grounded) by being securely mounted to the enclosure. However, if the DC reactor is not earthed (grounded) securely enough, an earthing (grounding) cable may be used.

NOTE

- The wiring distance must be within 5 m.
- As a reference, the cable gauge for the connection must be equal to or larger than that of the power cables (R/L1, S/L2, T/L3) and the earthing (grounding) cable. (Refer to page 54.)

MEMO

CHAPTER 3 Precautions for Use of the Inverter

3.1 Electro-magnetic interference (EMI) and leakage currents 100
3.2 Power supply harmonics....105
3.3 Installation of a reactor 109
3.4 Power shutdown and magnetic contactor (MC)....110
3.5 Countermeasures against deterioration of the 400 V class motor insulation....112
3.6 Checklist before starting operation 113
3.7 Failsafe system which uses the inverter 116

3 Precautions for Use of the Inverter

This chapter explains the precautions for use of this product.
Always read the instructions before use.

3.1 Electro-magnetic interference (EMI) and leakage currents

3.1.1 Leakage currents and countermeasures

Capacitances exist between the inverter I/O cables, other cables and earth and in the motor, through which a leakage current flows. Since its value depends on the static capacitances, carrier frequency, etc., low acoustic noise operation at the increased carrier frequency of the inverter will increase the leakage current. Therefore, take the following countermeasures. Select the earth leakage current breaker according to its rated sensitivity current, independently of the carrier frequency setting.

◆ To-earth (ground) leakage currents

Leakage currents may flow not only into the power system of the inverter but also into the other power systems through the earthing (grounding) cable, etc. These leakage currents may operate earth leakage circuit breakers and earth leakage relays unnecessarily.

■ Precautions

- If the carrier frequency setting is high, decrease the **Pr.72 PWM frequency selection** setting.
  Note that motor noise increases. Selecting **Pr.240 Soft-PWM operation selection** makes the sound inoffensive.
- By using earth leakage circuit breakers designed to suppress harmonics and surge voltage in the power system of the inverter and other power systems, operation can be performed with the carrier frequency kept high (with low noise).

NOTE

- Long wiring will increase the leakage current.
- High motor capacity will increase the leakage current. The leakage current of the 400 V class is larger than that of the 200 V class.

◆ Line-to-line leakage currents

Harmonics of leakage currents flowing in static capacitances between the inverter output cables may operate the external thermal relay unnecessarily. When the wiring length is long (50 m or more) for the 400 V class small-capacity models (FR-E840-0170(7.5K) or lower), the external thermal relay is likely to operate unnecessarily because the ratio of the leakage current to the rated motor current increases.

■ Line-to-line leakage current example (200 V class)

Motor capacity (kW)	Rated motor current (A)	Leakage current (mA)*1		Condition
		Wiring length 50 m	Wiring length 100 m	
0.4	1.8	310	500	• Motor: SF-JR 4P • Carrier frequency: 14.5 kHz • Cable: 2 mm^2, 4 cores • Cabtyre cable
0.75	3.2	340	530	
1.5	5.8	370	560	
2.2	8.1	400	590	
3.7	12.8	440	630	
5.5	19.4	490	680	
7.5	25.6	535	725	

*1 The leakage currents of the 400 V class are about twice as large.

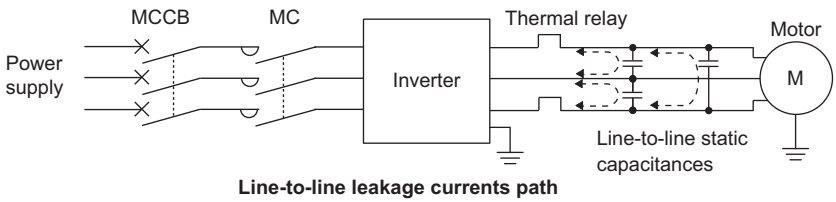

Line-to-line leakage currents path

■ Precautions

- Use **Pr.9 Electronic thermal O/L relay**.
- If the carrier frequency setting is high, decrease the **Pr.72 PWM frequency selection** setting.
  Note that motor noise increases. Selecting **Pr.240 Soft-PWM operation selection** makes the sound inoffensive.
  To ensure that the motor is protected against line-to-line leakage currents, it is recommended to use a temperature sensor to directly detect motor temperature.

■ Installation and selection of the molded case circuit breaker

Install a molded case circuit breaker (MCCB) on the power receiving side to protect the wiring at the inverter input side. Select an MCCB according to the inverter input side power factor, which depends on the power supply voltage, output frequency and load. Especially for a completely electromagnetic MCCB, a slightly large capacity must be selected since its operation characteristic varies with harmonic currents. (Check it in the data of the corresponding breaker.) As an earth leakage current breaker, use the Mitsubishi earth leakage current breaker designed for harmonics and surge suppression.

◆ Selecting the rated sensitivity current for the earth leakage circuit breaker

To install the earth leakage circuit breaker on the inverter circuit, select its rated sensitivity current as follows, independently of the PWM carrier frequency.

- Breaker designed for harmonic and surge suppression
  Rated sensitivity current
  IΔn ≥ 10 × (Ig1 + Ign + Igi + Ig2 + Igm)
- Standard breaker
  Rated sensitivity current
  IΔn ≥ 10 × {Ig1 + Ign + Igi + 3 × (Ig2 + Igm)}

Ig1, Ig2: Leakage currents in wire path during commercial power supply operation

Ign: Leakage current from noise filters on the input side of the inverter

Igm: Leakage current from the motor during commercial power supply operation

Igi: Leakage current of inverter unit

Example of leakage current of cable path per 1 km during the commercial power supply operation when the CV cable is routed in metal conduit
(200 V 60 Hz)

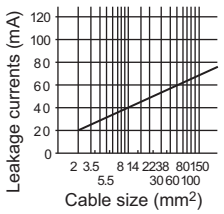

Leakage current example of three-phase induction motor during the commercial power supply operation
(200 V 60 Hz)

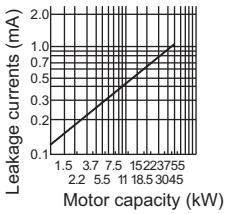

Example of leakage current of cable path per 1km during the commercial power supply operation when the CV cable is routed in metal conduit
(Three-phase three-wire delta connection 400 V 60 Hz)

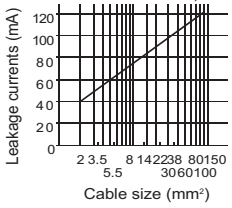

Leakage current example of three-phase induction motor during the commercial power supply operation
(Totally-enclosed fan-cooled type motor 400 V 60 Hz)

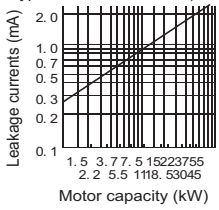

For "⅄" connection, the amount of leakage current is approx. 1/3 of the above value.

Example

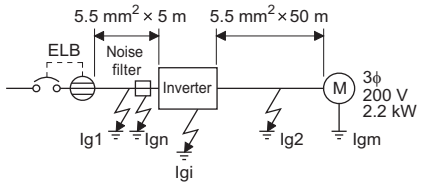

Item	Breaker designed for harmonic and surge suppression	Standard breaker
Leakage current Ig1 (mA)	$33 \times \frac{5m}{1000m} = 0.17$	
Leakage current Ign (mA)	0 (without noise filter)	
Leakage current Igi (mA)	1 (without EMC filter)	
Leakage current Ig2 (mA)	$33 \times \frac{50m}{1000m} = 1.65$	
Motor leakage current Igm (mA)	0.18	
Total leakage current (mA)	3.00	6.66
Rated sensitivity current (mA) (≥ Ig × 10)	30	100

NOTE

- Install the earth leakage circuit breaker (ELB) on the input side of the inverter.
- In the 人 connection earthed-neutral system, the sensitivity current is blunt against a ground fault in the inverter output side. Earthing (Grounding) must conform to the requirements of national and local safety regulations and electrical codes. (NEC section 250, IEC 61140 class 1 and other applicable standards)
- When the breaker is installed on the output side of the inverter, it may be unnecessarily operated by harmonics even if the effective value is within the rating.
  In this case, do not install the breaker since the eddy current and hysteresis loss will increase, leading to temperature rise.
- The following models and products are standard breakers: the models BV-C1, BC-V, NVB, NV-L, NV-G2N, NV-G3NA, and NV-2F, the earth leakage circuit breakers with AA neutral wire open-phase protection, and the earth leakage relays (except NV-ZHA).
  The other series, models, and products are designed for harmonic and surge suppression: the NV-C series, NV-S series, MN series, the models NV30-FA, NV50-FA, NV-H, and BV-C2, earth leakage alarm breaker NF-Z, and the earth leakage relay NV-ZHA.

3.1.2 Techniques and measures for electromagnetic compatibility (EMC)

Some electromagnetic noises enter the inverter to cause the inverter malfunction, and others are radiated by the inverter to cause the peripheral devices to malfunction. (The former is called EMS problem, the latter is called EMI problem, and both is called EMC problem.) Though the inverter is designed to be immune to noises, it requires the following basic measures and EMS measures as it handles low-level signals. Pay attention to the electromagnetic noises that could be generated by the inverter since the inverter chops outputs at high carrier frequency. If these electromagnetic noises cause peripheral devices to malfunction, EMI countermeasures should be taken to suppress noises. These techniques differ slightly depending on EMI paths.

◆ Basic measures

- Do not run the power cables (I/O cables) and signal cables of the inverter in parallel with each other and do not bundle them.
- Use shielded twisted pair cables for the detector connecting and control signal cables and connect the sheathes of the shielded cables to terminal SD.
- Ground (Earth) the inverter, motor, etc. at one point.

◆ EMS measures to reduce electromagnetic noises that enter the inverter and cause it to malfunction

When devices that generate many electromagnetic noises (which use magnetic contactors, electromagnetic brakes, many relays, for example) are installed near the inverter and the inverter may malfunction due to electromagnetic noises, the following countermeasures must be taken:

- Provide surge suppressors for devices that generate many electromagnetic noises to suppress electromagnetic noises.
- Install data line filters to signal cables (refer to page 103).
- Ground (Earth) the shields of the detector connection and control signal cables with cable clamp metal.

◆ EMI measures to reduce electromagnetic noises that are radiated by the inverter to cause the peripheral devices to malfunction

Inverter-generated noises are largely classified into those radiated by the inverter itself and by the I/O cables connected to its main circuit, those electromagnetically and electrostatically induced to the signal cables of the peripheral devices close to the power cable connected to the inverter main circuit, and those transmitted through the power cables.

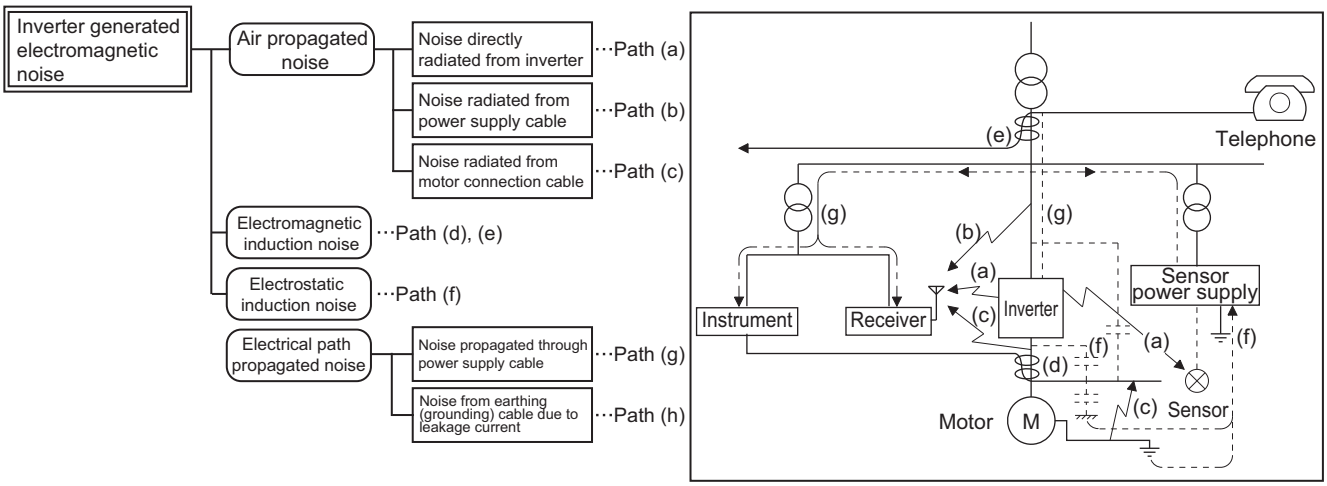

Noise propagation path	Countermeasure
(a), (b), (c)	When devices that handle low-level signals and are liable to malfunction due to electromagnetic noises, e.g. instruments, receivers and sensors, are contained in the enclosure that contains the inverter or when their signal cables are run near the inverter, the devices may malfunction due to by air-propagated electromagnetic noises. The following countermeasures must be taken: • Install easily affected devices as far away as possible from the inverter. • Run easily affected signal cables as far away as possible from the inverter and its I/O cables. • Do not run the signal cables and power cables (inverter I/O cables) in parallel with each other and do not bundle them. • Install an external EMC filter. • Install a line noise filter or radio noise filter on the input side and install a line noise filter on the output side to suppress the radiated noise from the cables. • Use shielded cables as signal cables and power cables and run them in individual metal conduits to produce further effects.
(d), (e), (f)	When the signal cables are run in parallel with or bundled with the power cables, magnetic and static induction noises may be propagated to the signal cables to cause malfunction of the devices and the following countermeasures must be taken: • Install easily affected devices as far away as possible from the inverter. • Run easily affected signal cables as far away as possible from the inverter and its I/O cables. • Do not run the signal cables and power cables (inverter I/O cables) in parallel with each other and do not bundle them. • Use shielded cables as signal cables and power cables and run them in individual metal conduits to produce further effects.
(g)	When the power supplies of the peripheral devices are connected to the power supply of the inverter in the same power system, inverter-generated noises may flow back through the power supply cables to cause malfunction of the devices and the following countermeasures must be taken: • Install an external EMC filter. • Install the line noise filter (FR-BLF/FR-BSF01) to the power cables (output cables) of the inverter.
(h)	When a closed loop circuit is formed by connecting the peripheral device wiring to the inverter, leakage currents may flow through the earthing (grounding) cable of the inverter to cause the device to malfunction. In that case, disconnecting the earthing (grounding) cable from the device may stop the malfunction of the device.

■ Data line filter

Data line filter is effective as an EMI countermeasure. Provide a data line filter for the detector cable, etc.

- Commercially available data line filter: ZCAT3035-1330 (by TDK), ESD-SR-250 (by TOKIN)

- Specification example (ZCAT3035-1330 by TDK)

Item	Description	
Impedance (Ω)	10 to 100 MHz	80
	100 to 500 MHz	150
Outline dimension drawings (mm)	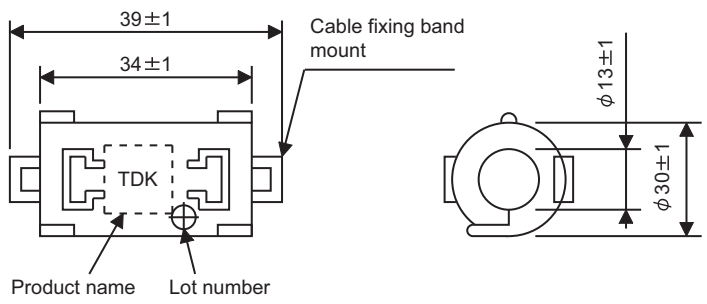	

The impedance values above are reference values, and not guaranteed values.

■ EMI measure example

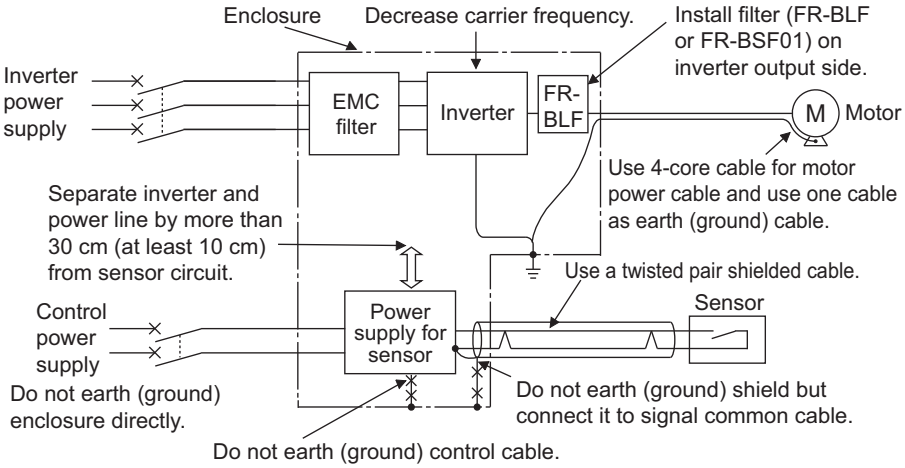

NOTE

- For compliance with the EU EMC Directive, refer to the document enclosed with the product.

3.2 Power supply harmonics

3.2.1 Power supply harmonics

The inverter may generate power supply harmonics from its converter circuit to affect the power generator, power factor correction capacitor etc. Power supply harmonics are different from noise and leakage currents in source, frequency band and transmission path. Take the following countermeasure suppression techniques.

- Differences between harmonics and noises

Item	Harmonics	Noise
frequency	Normally 40th to 50th degrees or less (3 kHz or less).	High frequency (several 10 kHz to 1 GHz order).
Location	To-electric channel, power impedance.	To-space, distance, wiring path.
Quantitative understanding	Theoretical calculation possible.	Random occurrence, quantitative grasping difficult.
Generated amount	Nearly proportional to the load capacity.	Changes with the current variation ratio. (Gets larger as switching speed increases.)
Affected equipment immunity	Specified by standards per equipment.	Different depending on maker's equipment specifications.
Countermeasure	Provide a reactor.	Increase distance.

- Countermeasures

  The harmonic current generated from the inverter to the input side differs according to various conditions such as the wiring impedance, whether a reactor is used or not, and output frequency and output current on the load side.

  For the output frequency and output current, we understand that this should be calculated in the conditions under the rated load at the maximum operating frequency.

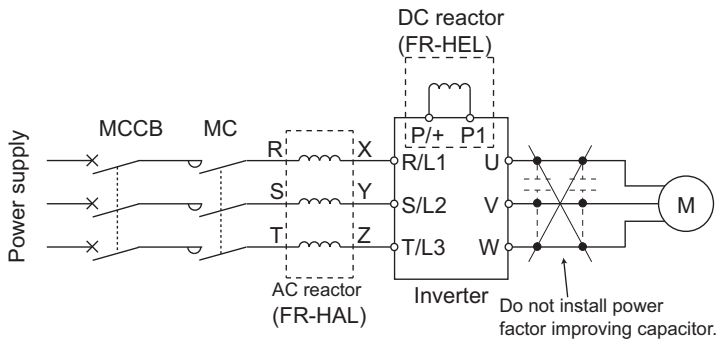

NOTE

- The power factor improving capacitor and surge suppressor on the inverter output side may be overheated or damaged by the harmonic components of the inverter output. Also, since an excessive current flows in the inverter to activate overcurrent protection, do not provide a capacitor and surge suppressor on the inverter output side when the motor is driven by the inverter. For power factor improvement, install a reactor on the inverter input side or in the DC circuit.

3.2.2 Harmonic suppression guidelines in Japan

Inverters have a converter section (rectifier circuit) and generate a harmonic current.

Harmonic currents flow from the inverter to a power receiving point via a power transformer. The Harmonic Suppression Guidelines was established to protect other consumers from these outgoing harmonic currents.

The three-phase 200 V input specifications 3.7 kW or lower (or single-phase 200 V input specifications 2.2 kW or lower) were previously covered by the Harmonic Suppression Guidelines for Household Appliances and General-purpose Products and other models were covered by the Harmonic Suppression Guidelines for Consumers Who Receive High Voltage or Special High Voltage. However, the transistorized inverter has been excluded from the target products covered by the Harmonic Suppression Guidelines for Household Appliances and General-purpose Products in January 2004 and the Harmonic Suppression Guideline for Household Appliances and General-purpose Products was repealed on September 6, 2004.
All capacity and all models of general-purpose inverter used by specific consumers are now covered by "the Harmonic Suppression Guidelines for Consumers Who Receive High Voltage or Special High Voltage" (hereinafter referred to as "the Specific Consumer Guidelines").

- "Specific Consumer Guidelines"
  This guideline sets forth the maximum harmonic currents outgoing from a high-voltage or especially high-voltage receiving consumer who will install, add or renew harmonic generating equipment. If any of the maximum values is exceeded, this guideline requires that consumer to take certain suppression measures.
- Maximum values of outgoing harmonic currents per 1 kW contract power

Received power voltage	5th	7th	11th	13th	17th	19th	23rd	Over 23rd
6.6 kV	3.5	2.5	1.6	1.3	1.0	0.9	0.76	0.70
22 kV	1.8	1.3	0.82	0.69	0.53	0.47	0.39	0.36
33 kV	1.2	0.86	0.55	0.46	0.35	0.32	0.26	0.24

◆ Application of the specific consumer guidelines

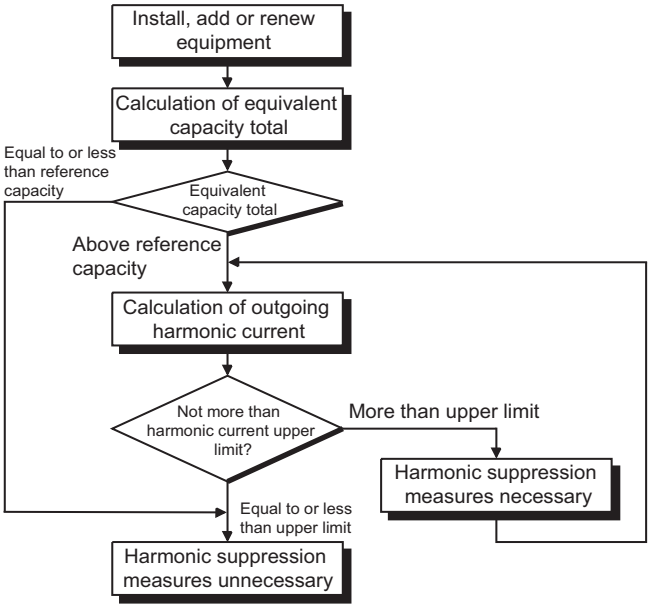

■ Conversion factor

Classification	Circuit type		Conversion factor Ki
3	Three-phase bridge (capacitor smoothing)	Without reactor	K31 = 3.4
		With reactor (AC side)	K32 = 1.8
		With reactor (DC side)	K33 = 1.8
		With reactors (AC, DC sides)	K34 = 1.4
4	Single-phase bridge (capacitor smoothing, full-wave rectification)	Without reactor	K43 = 2.9
		With reactor (AC side)	K44 = 1.3
5	Self-excitation three-phase bridge	When a high power factor converter is used	K5 = 0

■ Equivalent capacity limit

Received power voltage	Reference capacity
6.6 kV	50 kVA
22/33 kV	300 kVA
66 kV or more	2000 kVA

■ Harmonic content (when the fundamental current is considered as 100%)

	Reactor	5th	7th	11th	13th	17th	19th	23rd	25th
Three-phase bridge (capacitor smoothing)	Not used	65	41	8.5	7.7	4.3	3.1	2.6	1.8
	Used (AC side)	38	14.5	7.4	3.4	3.2	1.9	1.7	1.3
	Used (DC side)	30	13	8.4	5.0	4.7	3.2	3.0	2.2
	Used (AC, DC sides)	28	9.1	7.2	4.1	3.2	2.4	1.6	1.4
Single-phase bridge (capacitor smoothing, full-wave rectification)	Not used	60	33.5	6.1	6.4	2.6	2.7	1.5	1.5
	Used (AC side)	31.9	8.3	3.8	3.0	1.7	1.4	1.0	0.7

■ Calculation of equivalent capacity P0 of harmonic generating equipment

"Equivalent capacity" is the capacity of a 6-pulse converter converted from the capacity of consumer's harmonic generating equipment and is calculated by the following equation. If the sum of equivalent capacities is higher than the limit (refer to the list of the equivalent capacity limits), harmonics must be calculated by the equation in next subheading.

P0 = Σ (Ki × Pi) [kVA]

Ki: Conversion factor (Refer to the list of the conversion factors.)

Pi: Rated capacity of harmonic generating equipment*1 [kVA]

i: Number indicating the conversion circuit type

*1 Rated capacity: Determined by the capacity of the applied motor and found in the table "Rated capacities and outgoing harmonic currents of inverter-driven motors". The rated capacity used here is used to calculate the generated harmonic amount and is different from the power supply capacity required for actual inverter drive.

■ Calculation of outgoing harmonic current

Outgoing harmonic current = fundamental wave current (value converted from received power voltage) × operation ratio × harmonic content

- Operation ratio: actual load factor × operation time ratio during 30 minutes
- Harmonic content: Refer to the list of the harmonic content.

■ Rated capacities and outgoing harmonic currents of inverter-driven motors

Applicable motor (kW)	Fundamental wave current (A)		Fundamental wave current converted from 6.6 kV (mA)	Rated capacity (kVA)	Outgoing harmonic current converted from 6.6 kV (mA) (No reactor, 100% operation ratio)							
	200 V	400 V			5th	7th	11th	13th	17th	19th	23rd	25th
0.4	1.61	0.81	49	0.57	31.85	20.09	4.165	3.773	2.107	1.519	1.274	0.882
0.75	2.74	1.37	83	0.97	53.95	34.03	7.055	6.391	3.569	2.573	2.158	1.494
1.5	5.50	2.75	167	1.95	108.6	68.47	14.20	12.86	7.181	5.177	4.342	3.006
2.2	7.93	3.96	240	2.81	156.0	98.40	20.40	18.48	10.32	7.440	6.240	4.320
3.7	13.0	6.50	394	4.61	257.1	161.5	33.49	30.34	16.94	12.21	10.24	7.092
5.5	19.1	9.55	579	6.77	376.1	237.4	49.22	44.58	24.90	17.95	15.05	10.42
7.5	25.6	12.8	776	9.07	504.4	318.2	65.96	59.75	33.37	24.06	20.18	13.97
11	36.9	18.5	1121	13.1	728.7	459.6	95.29	86.32	48.20	34.75	29.15	20.18
15	49.8	24.9	1509	17.6	980.9	618.7	128.3	116.2	64.89	46.78	39.24	27.16
18.5	61.4	30.7	1860	21.8	1209	762.6	158.1	143.2	79.98	57.66	48.36	33.48
22	73.1	36.6	2220	25.9	1443	910.2	188.7	170.9	95.46	68.82	57.72	39.96

■ Determining if a countermeasure is required

A countermeasure for harmonics is required if the following condition is satisfied: outgoing harmonic current > maximum value per 1 kW contract power × contract power.

■ Harmonic suppression techniques

No.	Item	Description
1	Reactor installation (FR-HAL, FR-HEL)	Install an AC reactor (FR-HAL) on the AC side of the inverter or a DC reactor (FR-HEL) on its DC side, or install both to suppress outgoing harmonic currents.
2	High power factor converter (FR-HC2), multifunction regeneration converter (FR-XC)*1	These converters trim the current waveform to be a sine waveform by switching the rectifier circuit (converter module) with transistors. Doing so suppresses the generated harmonic amount significantly. Connect it to the DC area of an inverter. Use the high power factor converter (FR-HC2) with the accessories that come as standard. To use the FR-XC series converter, use the converter with an FR-XCB box-type reactor and enable the harmonic suppression function.
3	Installation of power factor improving capacitor	When used with a reactor connected in series, the power factor improving correction capacitor can absorb harmonic currents.
4	Transformer multi-phase operation	Use two transformers with a phase angle difference of 30° in combinations of ⅄ to Δ and Δ to Δ, to provide an effect corresponding to 12 pulses, reducing low-degree harmonic currents.
5	Passive filter (AC filter)	A capacitor and a reactor are used together to reduce impedances at specific frequencies. Harmonic currents are expected to be absorbed greatly by using this technique.
6	Active filter	This filter detects the current in a circuit generating a harmonic current and generates a harmonic current equivalent to a difference between that current and a fundamental wave current to suppress the harmonic current at the detection point. Harmonic currents are expected to be absorbed greatly by using this technique.

*1 The safety communication model (FR-E800-SCE) is not intended for the use with the high power factor converter (FR-HC2) or multifunction regeneration converter (FR-XC in common bus regeneration mode).

3.3 Installation of a reactor

When the inverter is connected near a large-capacity power transformer (500 kVA or more) or when a power factor correction capacitor is to be switched over, an excessive peak current may flow in the power input circuit, damaging the converter circuit. To prevent this, always install an AC reactor (FR-HAL), which is available as an option.

- Three-phase power input

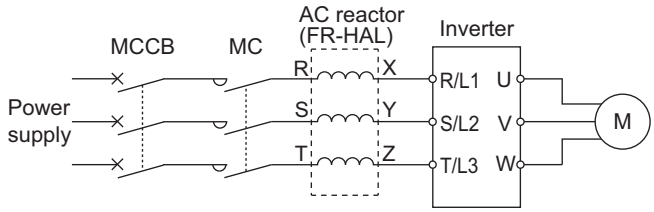

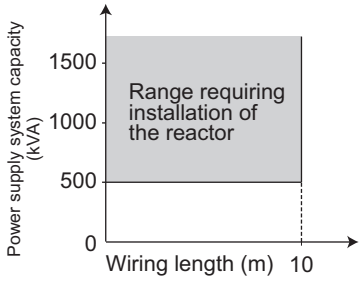

- Single-phase power input

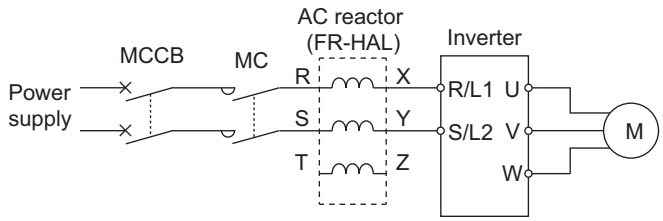

3.4 Power shutdown and magnetic contactor (MC)

◆ Inverter input side magnetic contactor (MC)

On the inverter input side, it is recommended to provide an MC for the following purposes. (Refer to page 25 for selection.)

- To disconnect the inverter from the power supply at activation of a protective function or at malfunctioning of the driving system (emergency stop, etc.).
  For example, an MC prevents overheat or burnout of the brake resistor when heat capacity of the resistor is insufficient or brake regenerative transistor is damaged with short while connecting an optional brake resistor.
- To prevent any accident due to an automatic restart at power restoration after an inverter stop made by a power failure.
- To separate the inverter from the power supply to ensure safe maintenance and inspection work.
  Use the inverter input current as a reference for selection of an MC to perform an emergency stop during operation, and select the MC conforming to JEM 1038-AC-3 class rated operational current.

NOTE

- Since repeated inrush currents at power ON will shorten the life of the converter circuit (switching life is about 1,000,000 times), frequent starts and stops of the magnetic contactor must be avoided. Turn ON or OFF the start (STF/STR) signal for the inverter start control to run or stop the inverter.

- Inverter start/stop circuit example
  As shown in the following figure, always use the start signal (turn ON or OFF the STF/STR signal) to make a start or stop.

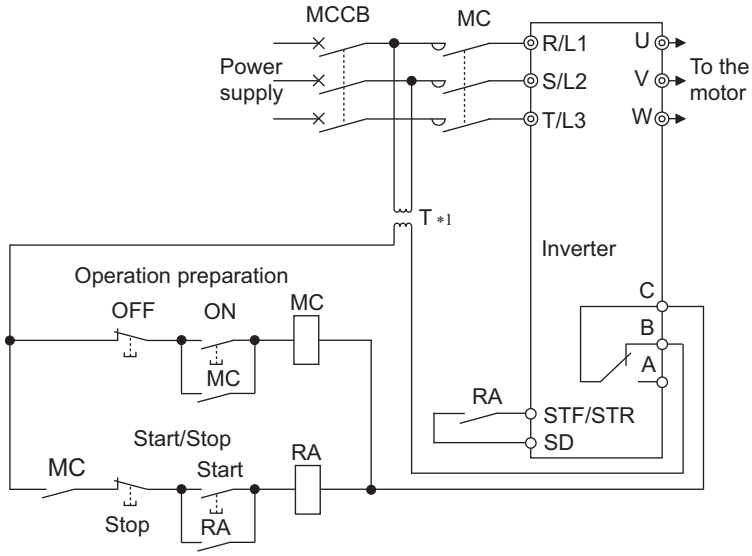

*1 When the power supply is 400 V class, install a stepdown transformer.

◆ Handling of the magnetic contactor on the inverter's output side

Switch the magnetic contactor between the inverter and motor only when both the inverter and motor are at a stop. When the magnetic contactor is turned ON while the inverter is operating, overcurrent protection of the inverter and such will activate.

◆ Handling of the manual contactor on the inverter's output side

A PM motor is a synchronous motor with high-performance magnets embedded inside. High-voltage is generated at the motor terminals while the motor is running even after the inverter power is turned OFF. In an application where the PM motor is driven by the load even after the inverter is powered OFF, a low-voltage manual contactor must be connected at the inverter's output side.

NOTE

- Before wiring or inspection for a PM motor, confirm that the PM motor is stopped. In an application, such as fan and blower, where the motor is driven by the load, a low-voltage manual contactor must be connected at the inverter's output side, and wiring and inspection must be performed while the contactor is open. Otherwise you may get an electric shock.
- Do not open or close the contactor while the inverter is running (outputting).

3.5 Countermeasures against deterioration of the 400 V class motor insulation

In the PWM type inverter, a surge voltage attributable to wiring constants is generated at the motor terminals. Especially in a 400 V class motor, the surge voltage may deteriorate the insulation. When the 400 V class motor is driven by the inverter, consider the following countermeasures:

◆ Countermeasures

It is recommended to take one of the following countermeasures:

■ Rectifying the motor insulation and limiting the PWM carrier frequency according to the wiring length

For the 400 V class motor, use an insulation-enhanced motor.

Specifically,

- Order a "400 V class inverter-driven insulation-enhanced motor".
- For the dedicated motor such as the constant-torque motor and low-vibration motor, use an "inverter-driven dedicated motor".
- Set **Pr.72 PWM frequency selection** as indicated below according to the wiring length.

	Wiring length		
	Shorter than 50 m	**50 to 100 m**	**Longer than 100 m**
Pr.72 PWM frequency selection	14.5 kHz or less	8 kHz or less	2 kHz or less

■ Suppressing the surge voltage on the inverter side

- Connect the surge voltage suppression filter (FR-ASF-H/FR-BMF-H) to the output side of the inverter.

NOTE

- For the details of the surge voltage suppression filter (FR-ASF-H/FR-BMF-H), refer to the Instruction Manual of each option.

3.6 Checklist before starting operation

The FR-E800 series inverter is a highly reliable product, but incorrect peripheral circuit making or operation/handling method may shorten the product life or damage the product. Before starting operation, always recheck the following points.

Checkpoint	Countermeasure	Refer to page	Check by user
Crimp terminals are insulated.	Use crimp terminals with insulation sleeves to wire the power supply and the motor.	—	
The wiring between the power supply (terminals R/L1, S/L2, T/L3) and the motor (terminals U, V, W) is correct.	Application of power to the output terminals (U, V, W) of the inverter will damage the inverter. Never perform such wiring.	51	
No wire offcuts are left from the time of wiring.	Wire offcuts can cause a fault, failure, or malfunction. Always keep the inverter clean. When drilling mounting holes in an enclosure etc., take caution not to allow chips and other foreign matter to enter the inverter.	—	
The main circuit cable gauge is correctly selected.	Use an appropriate cable gauge to suppress the voltage drop to 2% or less. If the wiring distance is long between the inverter and motor, a voltage drop in the main circuit will cause the motor torque to decrease especially during the output of a low frequency.	54	
The total wiring length is within the specified length.	Keep the total wiring length within the specified length. In long distance wiring, charging currents due to stray capacitance in the wiring may degrade the fast-response current limit operation or cause the equipment on the inverter's output side to malfunction. Pay attention to the total wiring length.	54	
Countermeasures are taken against EMI.	The input/output (main circuit) of the inverter includes high frequency components, which may interfere with the communication devices (such as AM radios) used near the inverter. Connect radio noise filters or EMC filters on the input side of the inverter to minimize interference.	102	
On the inverter's output side, there is no power factor correction capacitor, surge suppressor, or radio noise filter installed.	Doing so will shut off the inverter output or damage the capacitor or surge suppressor. If any of the above devices is connected, immediately remove it.	—	
When performing an inspection or rewiring on the product that has been energized, the operator has waited long enough after shutting off the power supply.	For a short time after the power-OFF, a high voltage remains in the smoothing capacitor, and it is dangerous. Before performing an inspection or rewiring, wait 10 minutes or longer after the power supply turns OFF, then confirm that the voltage across the main circuit terminals P/+ and N/- of the inverter is low enough using a digital multimeter, etc.	—	
The 24 V external power supply has been turned OFF before wiring or inspection.	If "EV" is displayed on the operation panel when the FR-E8DS is installed, turn OFF the 24 V external power supply before wiring and inspection.	—	
The inverter's output side has no short circuit or ground fault occurring.	• A short circuit or ground fault on the inverter's output side may damage the inverter module. • Fully check the insulation resistance of the circuit prior to inverter operation since repeated short circuits caused by peripheral circuit inadequacy or an earth (ground) fault caused by wiring inadequacy or reduced motor insulation resistance may damage the inverter module. • Fully check the to-earth (ground) insulation and phase-to-phase insulation of the inverter's output side before power-ON. Especially for an old motor or use in hostile atmosphere, securely check the motor insulation resistance, etc.	—	
The circuit is not configured to use the inverter's input-side magnetic contactor to start/stop the inverter frequently.	Since repeated inrush currents at power ON will shorten the life of the converter circuit, frequent starts and stops of the magnetic contactor must be avoided. Turn ON or OFF the inverter's start (STF/STR) signal to run or stop the inverter.	110	
A mechanical brake is not connected to terminals P/+ and PR.	To terminals P/+ and PR, connect only an external brake resistor.	89	
The voltage applied to the inverter I/O signal circuits is within the specifications.	Application of a voltage higher than the permissible voltage to the inverter I/O signal circuits or opposite polarity may damage the I/O devices.	60, 63	

Checkpoint	Countermeasure	Refer to page	Check by user
When using the electronic bypass operation, electrical and mechanical interlocks are provided between the electronic bypass contactors MC1 and MC2.	When using a switching circuit as shown below, chattering due to misconfigured sequence or arc generated at switching may allow undesirable current to flow in and damage the inverter. Miswiring may also damage the inverter. (Note that a PM motor cannot be driven by the commercial power supply.) 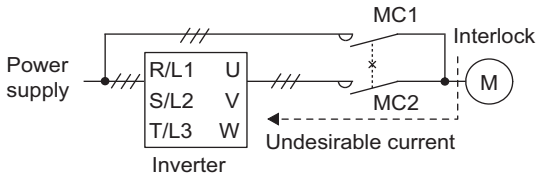 If switching to the commercial power supply operation while a failure such as an output short circuit has occurred between the magnetic contactor MC2 and the motor, the damage may further spread. If a failure has occurred between the MC2 and the motor, a protection circuit such as using the OH signal input must be provided.	—	
A countermeasure is provided for power restoration after a power failure.	If the machine must not be restarted when power is restored after a power failure, provide an MC on the inverter's input side and also make up a sequence which will not switch ON the start signal. If the start signal (start switch) remains ON after a power failure, the inverter will automatically restart as soon as the power is restored.	—	
For Vector control, the encoder is properly installed.	The encoder must be directly connected to a motor shaft without any backlash. (Real sensorless vector control or PM sensorless vector control does not require an encoder.)		
A magnetic contactor (MC) is installed on the inverter's input side.	On the inverter's input side, connect an MC for the following purposes: • To disconnect the inverter from the power supply at activation of a protective function or at malfunctioning of the driving system (emergency stop, etc.). • To prevent any accident due to an automatic restart at power restoration after an inverter stop made by a power failure. • To separate the inverter from the power supply to ensure safe maintenance and inspection work. To use an MC to perform an emergency stop during operation, select the MC conforming to JEM 1038-AC-3 rated current for the inverter rated input current.	110	
The magnetic contactor on the inverter's output side is properly handled.	Switch the magnetic contactor between the inverter and motor only when both the inverter and motor are at a stop.	110	
When using a PM motor, a low-voltage manual contactor is installed on the inverter's output side.	A PM motor is a synchronous motor with high-performance magnets embedded inside. High-voltage is generated at the motor terminals while the motor is running even after the inverter power is turned OFF. In an application, such as fan and blower, where the motor is driven by the load, a low-voltage manual contactor must be connected on the inverter's output side, and wiring and inspection must be performed while the contactor is open. Otherwise you may get an electric shock.	110	
An EMI countermeasure is provided for the frequency setting signals.	If electromagnetic noise generated from the inverter causes the frequency setting signal to fluctuate and the motor rotation speed to be unstable when changing the motor speed with analog signals, the following countermeasures are effective: • Do not run the signal cables and power cables (inverter I/O cables) in parallel with each other and do not bundle them. • Run the signal cables as far away as possible from the power cables (inverter I/O cables). • Use shielded cables. • Install a data line filter to signal cable (example: ZCAT3035-1330 by TDK).	102	
A countermeasure is provided for an overload operation.	When performing frequent starts/stops by the inverter, rise/fall in the temperature of the transistor element of the inverter will repeat due to a repeated flow of large current, shortening the life from thermal fatigue. Since thermal fatigue is related to the amount of current, the life can be increased by reducing current at locked condition, starting current, etc. Reducing current may extend the service life but may also cause torque shortage, which leads to a start failure. Adding a margin to the current can eliminate such a condition. For an induction motor, use an inverter of a higher capacity (up to two ranks). For a PM motor, use an inverter and PM motor of higher capacities.	—	
The specifications and rating match the system requirements.	Make sure that the specifications and rating match the system requirements.	120	

Checkpoint	Countermeasure	Refer to page	Check by user
Countermeasures are taken against electrical corrosion on the motor bearing.	When a motor is driven by the inverter, axial voltage is generated on the motor shaft, which may cause electrical corrosion of the bearing in rare cases depending on the wiring, load, operating conditions of the motor or specific inverter settings (high carrier frequency). Contact your sales representative to take appropriate countermeasures for the motor. The following shows examples of countermeasures for the inverter. • Decrease the carrier frequency. • Provide a common mode choke[*1] on the output side of the inverter.	—	

*1 Recommended common mode choke: FT-3KM F series FINEMET® common mode choke cores manufactured by Hitachi Metals, Ltd.
FINEMET is a registered trademark of Hitachi Metals, Ltd.

3.7 Failsafe system which uses the inverter

When a fault is detected by the protective function, the protective function activates and outputs the Fault signal. However, the Fault signal may not be output at an inverter's fault occurrence when the detection circuit or output circuit fails, etc. Although Mitsubishi assures the best quality products, provide an interlock which uses inverter status output signals to prevent accidents such as damage to the machine when the inverter fails for some reason. Also at the same time consider the system configuration where a failsafe from outside the inverter, without using the inverter, is enabled even if the inverter fails.

◆ Interlock method which uses the inverter status output signals

By combining the inverter output signals to provide an interlock as shown below, an inverter failure can be detected. (For details of each signal, refer to the FR-E800 Instruction Manual (Function).)

No.	Interlock method	Check method	Used signals
a	Inverter protective function operation	Operation check of an alarm contact. Circuit error detection by negative logic.	Fault (ALM) signal
b	Inverter operating status	Operation ready signal check.	Inverter operation ready (RY) signal
c	Inverter running status	Logic check of the start signal and running signal.	Start (STF or STR) signal Inverter running (RUN) signal
d	Inverter running status*1	Logic check of the start signal and output current.	Start (STF or STR) signal Output current detection (Y12) signal

*1 This interlock method cannot be used when a PM motor is used.

- When using various signals, assign the functions to **Pr.190 to Pr.196 (Output terminal function selection)** referring to the following table.

Output signal	Pr.190 to Pr.196 settings	
	Positive logic	Negative logic
ALM	99	199
RY	11	111
RUN	0	100
Y12	12	112

NOTE

- Changing the terminal assignment using **Pr.190 to Pr.196 (Output terminal function selection)** may affect the other functions. Set parameters after confirming the function of each terminal.

■ Checking by using the Fault signal output from the inverter... (a)

When the inverter's protective function is activated and the inverter output is stopped, the Fault (ALM) signal is output. (The ALM signal is assigned to terminals A, B, and C in the initial setting). With this signal, check that the inverter operates properly. In addition, negative logic can be set. (ON when the inverter is normal, OFF when the fault occurs.)

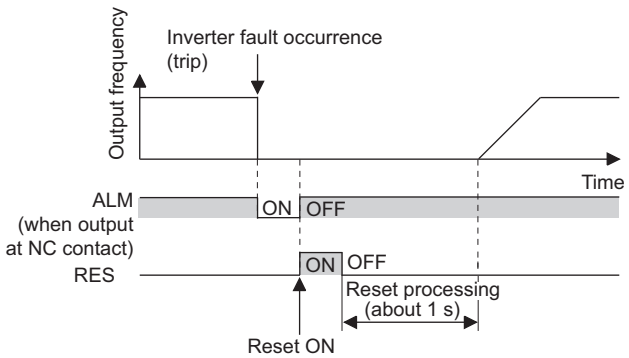

■ Checking the inverter operating status by using the Inverter operation ready signal output from the inverter ... (b)

The Inverter operation ready (RY) signal is output when the inverter power is ON and the inverter becomes operative. Check if the RY signal is output after powering ON the inverter.

■ Checking the inverter operating status by using the start signal input to the inverter and the Inverter running signal output from the inverter ... (c)

The Inverter running (RUN2) signal is output when the inverter is running. Check if the RUN2 signal is output while a start signal (the STF/STR signal for forward/reverse rotation command) is input to the inverter. Even after the start signal is turned OFF, the RUN2 signal is kept output until the inverter makes the motor to decelerate and to stop. For the logic check, configure a sequence considering the inverter's deceleration time.

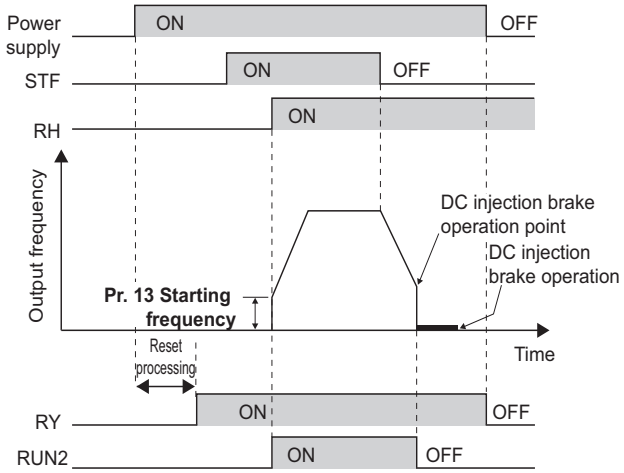

■ Checking the motor operating status by using the start signal input to the inverter and the Output current detection signal output from the inverter ... (d)

This interlock method cannot be used when a PM motor is used.

The Output current detection (Y12) signal is output when the inverter operates and currents flows into the motor.

Check if the Y12 signal is output while a start signal (the STF/STR signal for forward/reverse rotation command) is input to the inverter. The Y12 signal is initially set to be output at 150% inverter rated current. Adjust the level to around 20% using no load current of the motor as reference with **Pr.150 Output current detection level**.

Like the Inverter running (RUN) signal, even after the start signal is turned OFF, the Y12 signal is kept output until the inverter stops the output to a decelerating motor. For the logic check, configure a sequence considering the inverter's deceleration time.

◆ Backup method which does not use the inverter

Even if the interlock is provided by the inverter status signal, enough failsafe is not ensured depending on the failure status of the inverter itself. For example, if an inverter CPU fails in a system interlocked with the inverter's Fault, start, and RUN signals, no Fault signals will be output and the RUN signal will be kept ON because the inverter CPU is down.

Provide a speed detector to detect the motor speed and current detector to detect the motor current, and consider the backup system such as performing a check as follows according to the level of importance of the system.

■ Start signal and actual operation check

Check the motor running and motor current while the start signal is input to the inverter by comparing the start signal to the inverter and detected speed of the speed detector or detected current of the current detector. Note that the current is flowing through the motor while the motor coasts to stop, even after the inverter's start signal is turned OFF. For the logic check, configure a sequence considering the inverter's deceleration time. In addition, it is recommended to check the three-phase current when using the current detector.

■ Command speed and actual operation check

Check for a gap between the actual speed and commanded speed by comparing the inverter's speed command and the speed detected by the speed detector.

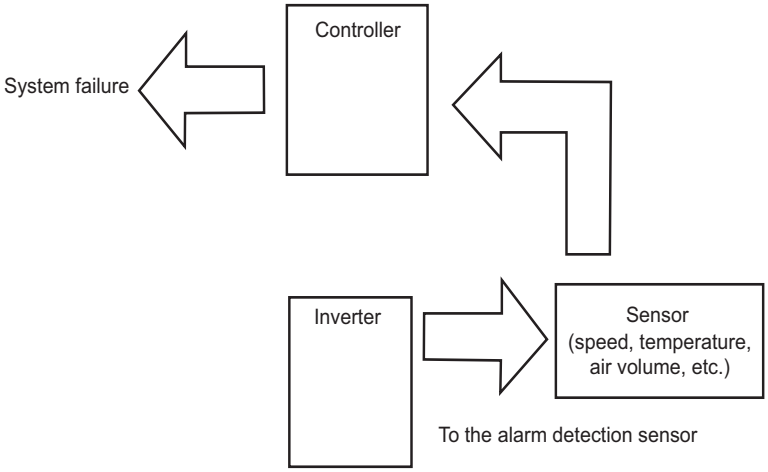

CHAPTER 4 Specifications

4.1 Inverter rating....120
4.2 Motor rating....123
4.3 Common specifications....134
4.4 Outline dimension drawings....136

4 Specifications

This chapter explains the specifications of this product.
Always read the instructions before use.

4.1 Inverter rating

◆ Three-phase 200 V power supply

Model FR-E820-[]				0008	0015	0030	0050	0080	0110	0175	0240	0330	0470	0600	0760	0900
				0.1K	0.2K	0.4K	0.75K	1.5K	2.2K	3.7K	5.5K	7.5K	11K	15K	18.5K	22K
Applicable motor capacity (kW)[*1]		LD		0.2	0.4	0.75	1.1	2.2	3.0	5.5	7.5	11.0	15.0	18.5	22.0	30.0
		ND (initial setting)		0.1	0.2	0.4	0.75	1.5	2.2	3.7	5.5	7.5	11.0	15.0	18.5	22.0
Output	Rated capacity (kVA)[*2]	LD		0.5	0.8	1.4	2.4	3.8	4.8	7.8	12.0	15.9	22.3	27.5	35.1	45.8
		ND (initial setting)		0.3	0.6	1.2	2.0	3.2	4.4	7.0	9.6	13.1	18.7	23.9	30.3	35.9
	Rated current (A)[*7]	LD		1.3 (1.1)	2.0 (1.7)	3.5 (3.0)	6.0 (5.1)	9.6 (8.2)	12.0 (10.2)	19.6 (16.7)	30.0 (25.5)	40.0 (34.0)	56.0 (47.6)	69.0 (58.7)	88.0 (74.8)	115.0 (97.8)
		ND (initial setting)		0.8 (0.8)	1.5 (1.4)	3.0 (2.5)	5.0 (4.1)	8.0 (7.0)	11.0 (10.0)	17.5 (16.5)	24.0 (23.0)	33.0 (31.0)	47.0 (44.0)	60.0 (57.0)	76.0 (72.0)	90.0 (86.0)
	Overload current rating[*3]	LD		120% 60 s, 150% 3 s (inverse-time characteristics) at surrounding air temperature of 50°C												
		ND (initial setting)		150% 60 s, 200% 3 s (inverse-time characteristics) at surrounding air temperature of 50°C												
	Voltage[*4]			Three-phase 200 to 240 V												
	Regenerative braking	Brake transistor		Not used		Built-in										
		Maximum brake torque (ND reference)[*5]		150%		100%		50%	20%							
Power supply	Rated input AC (DC) voltage/frequency			Three-phase 200 to 240 V, 50/60 Hz (283 to 339 VDC[*9])												
	Permissible AC (DC) voltage fluctuation			170 to 264 V, 50/60 Hz (240 to 373 VDC[*9])												
	Permissible frequency fluctuation			±5%												
	Rated input current (A)[*8]	Without DC reactor	LD	1.9	3.0	5.1	8.2	12.5	16.1	25.5	37.1	48.6	74.3	90.5	112.9	139.5
			ND	1.4	2.3	4.5	7.0	10.7	15.0	23.1	30.5	41.0	63.6	79.9	99.0	114.3
		With DC reactor	LD	1.3	2.0	3.5	6.0	9.6	12.0	20.0	30.0	40.0	56.0	69.0	88.0	115.0
			ND	0.8	1.5	3.0	5.0	8.0	11.0	17.5	24.0	33.0	47.0	60.0	76.0	90.0
	Power supply capacity (kVA)[*6]	Without DC reactor	LD	0.7	1.1	1.9	3.1	4.8	6.2	9.7	15.0	19.0	29.0	35.0	43.0	54.0
			ND	0.5	0.9	1.7	2.7	4.1	5.7	8.8	12.0	16.0	25.0	31.0	38.0	44.0
		With DC reactor	LD	0.5	0.8	1.3	2.3	3.7	4.6	7.5	11.0	15.0	21.0	26.0	34.0	44.0
			ND	0.3	0.6	1.1	1.9	3.0	4.2	6.7	9.1	13.0	18.0	23.0	29.0	34.0
Protective structure (IEC 60529)				Open type (IP20)												
Cooling system				Natural				Forced air								
Approx. mass (kg)				0.5	0.5	0.7	1.0	1.4	1.4	1.8	3.3	3.3	5.4	5.6	11.0	11.0

*1 The applicable motor capacity indicated is the maximum capacity applicable for use of the Mitsubishi Electric 4-pole standard motor.
To drive a Mitsubishi Electric high-performance energy-saving motor, use the 0.75K inverter for a 1.1 kW motor, or 2.2K inverter for a 3 kW motor.

*2 The rated output capacity is the value with respect to 230 V output voltage.

*3 The percentage of the overload current rating is the ratio of the overload current to the inverter's rated output current. For repeated duty, allow time for the inverter and motor to return to or below the temperatures under 100% load.

*4 The maximum output voltage does not exceed the power supply voltage. The maximum output voltage can be changed within the setting range.
The maximum point of the voltage waveform at the output side of the inverter is approximately the power supply voltage multiplied by $\sqrt{2}$.

*5 The amount of braking torque is the average short-term torque (which varies depending on motor loss) that is generated when a motor decelerates in the shortest time by itself from 60 Hz. It is not continuous regenerative torque. The average deceleration torque becomes lower when a motor decelerates from a frequency higher than the base frequency. The inverter is not equipped with a built-in brake resistor. Use an option brake resistor for an operation with large regenerative power (not available for the FR-E820-0008(0.1K) and FR-E820-0015(0.2K)). The brake unit (FR-BU2) can be also used.

*6 The power supply capacity varies with the value of the input power impedance (including those of the input reactor and cables).

*7 The value in parentheses is the rated output current when the low acoustic noise operation is performed with the surrounding air temperature exceeding 40°C while 2 kHz or higher value is selected in **Pr.72 PWM frequency selection**.

*8 The rated input current is the value at a rated output voltage. The input power impedances (including those of the input reactor and cables) affect the value.

*9 · Connect the DC power supply to the inverter terminals P/+ and N/-. Connect the positive terminal of the power supply to terminal P/+ and the negative terminal to terminal N/-.
· When the energy is regenerated from the motor, the voltage between terminals P/+ and N/- may temporarily rise to 415 V or more. Use a DC power supply resistant to the regenerative voltage/energy. When a power supply that cannot resist the regenerative voltage/energy is used, connect a reverse current prevention diode in series.
· Powering ON produces up to four times as large current as the inverter rated current. Prepare a DC power supply resistant to the inrush current at power ON, although an inrush current limit circuit is provided in the FR-E800 series inverter.
· The power capacity depends on the output impedance of the power supply. Select a power capacity around the AC power supply capacity.

◆ Three-phase 400 V power supply

Model FR-E840-[]				0016	0026	0040	0060	0095	0120	0170	0230	0300	0380	0440
				0.4K	0.75K	1.5K	2.2K	3.7K	5.5K	7.5K	11K	15K	18.5K	22K
Applicable motor capacity (kW)*1		LD		0.75	1.5	2.2	3.0	5.5	7.5	11.0	15.0	18.5	22.0	30.0
		ND (initial setting)		0.4	0.75	1.5	2.2	3.7	5.5	7.5	11.0	15.0	18.5	22.0
Output	Rated capacity (kVA)*2	LD		1.6	2.7	4.2	5.3	8.5	13.3	17.5	26.7	31.2	34.3	45.7
		ND (initial setting)		1.2	2.0	3.0	4.6	7.2	9.1	13.0	17.5	22.9	29.0	33.5
	Rated current (A)*7	LD		2.1 (1.8)	3.5 (3.0)	5.5 (4.7)	6.9 (5.9)	11.1 (9.4)	17.5 (14.9)	23.0 (19.6)	35.0 (29.8)	41.0 (34.9)	45.0 (38.3)	60.0 (51.0)
		ND (initial setting)		1.6 (1.4)	2.6 (2.2)	4.0 (3.8)	6.0 (5.4)	9.5 (8.7)	12.0	17.0	23.0	30.0	38.0	44.0
	Overload current rating*3	LD		120% 60 s, 150% 3 s (inverse-time characteristics) at surrounding air temperature of 50°C										
		ND (initial setting)		150% 60 s, 200% 3 s (inverse-time characteristics) at surrounding air temperature of 50°C										
	Voltage*4			Three-phase 380 to 480 V										
	Regenerative braking	Brake transistor		Built-in										
		Maximum brake torque (ND reference)*5		100%		50%	20%							
Power supply	Rated input AC (DC) voltage/frequency			Three-phase 380 to 480 V, 50/60 Hz (537 to 679 VDC*9)										
	Permissible AC (DC) voltage fluctuation			323 to 528 V, 50/60 Hz (457 to 740 VDC*9)										
	Permissible frequency fluctuation			±5%										
	Rated input current (A)*8	Without DC reactor	LD	3.3	6.0	8.9	10.7	16.2	24.9	32.4	46.7	54.2	59.1	75.6
			ND	2.7	4.4	6.7	9.5	14.1	17.8	24.7	32.1	41.0	50.8	57.3
		With DC reactor	LD	2.1	3.5	5.5	6.9	11.0	18.0	23.0	35.0	41.0	45.0	60.0
			ND	1.6	2.6	4.0	6.0	9.5	12.0	17.0	23.0	30.0	38.0	44.0
	Power supply capacity (kVA)*8	Without DC reactor	LD	2.5	4.5	6.8	8.2	12.4	19.0	25.0	36.0	42.0	45.0	58.0
			ND	2.1	3.4	5.1	7.2	10.8	14.0	19.0	25.0	32.0	39.0	44.0
		With DC reactor	LD	1.6	2.7	4.2	5.3	8.5	13.0	18.0	27.0	31.0	34.0	46.0
			ND	1.2	2.0	3.0	4.6	7.2	9.1	13.0	18.0	23.0	29.0	34.0
Protective structure (IEC 60529)				Open type (IP20)										
Cooling system				Natural		Forced air								
Approx. mass (kg)				1.2	1.2	1.4	1.8	1.8	2.4	2.4	4.8	4.9	11.0	11.0

*1 The applicable motor capacity indicated is the maximum capacity applicable for use of the Mitsubishi Electric 4-pole standard motor.
To drive a Mitsubishi Electric high-performance energy-saving motor, use the 2.2K inverter for a 3 kW motor.
*2 The rated output capacity is the value with respect to 440 V output voltage.
*3 The percentage of the overload current rating is the ratio of the overload current to the inverter's rated output current. For repeated duty, allow time for the inverter and motor to return to or below the temperatures under 100% load.
*4 The maximum output voltage does not exceed the power supply voltage. The maximum output voltage can be changed within the setting range.
The maximum point of the voltage waveform at the output side of the inverter is approximately the power supply voltage multiplied by $\sqrt{2}$.
*5 The amount of braking torque is the average short-term torque (which varies depending on motor loss) that is generated when a motor decelerates in the shortest time by itself from 60 Hz. It is not continuous regenerative torque. The average deceleration torque becomes lower when a motor decelerates from a frequency higher than the base frequency. The inverter is not equipped with a built-in brake resistor. Use an option brake resistor for an operation with large regenerative power. The brake unit (FR-BU2) can be also used.
*6 The power supply capacity varies with the value of the input power impedance (including those of the input reactor and cables).
*7 The value in parentheses is the rated output current when the low acoustic noise operation is performed with the surrounding air temperature exceeding 40°C while 2 kHz or higher value is selected in **Pr.72 PWM frequency selection**.
*8 The rated input current is the value at a rated output voltage. The input power impedances (including those of the input reactor and cables) affect the value.
*9 · Connect the DC power supply to the inverter terminals P/+ and N/-. Connect the positive terminal of the power supply to terminal P/+ and the negative terminal to terminal N/-.
· When the energy is regenerated from the motor, the voltage between terminals P/+ and N/- may temporarily rise to 830 V or more. Use a DC power supply resistant to the regenerative voltage/energy. When a power supply that cannot resist the regenerative voltage/energy is used, connect a reverse current prevention diode in series.
· Powering ON produces up to four times as large current as the inverter rated current. Prepare a DC power supply resistant to the inrush current at power ON, although an inrush current limit circuit is provided in the FR-E800 series inverter.
· The power capacity depends on the output impedance of the power supply. Select a power capacity around the AC power supply capacity.

◆ Single-phase 200 V power supply

Model FR-E820S-[]				0008	0015	0030	0050	0080	0110
				0.1K	0.2K	0.4K	0.75K	1.5K	2.2K
Applicable motor capacity (kW)*1		ND		0.1	0.2	0.4	0.75	1.5	2.2
Output	Rated capacity (kVA)*2	ND		0.3	0.6	1.2	2.0	3.2	4.4
Output	Rated current (A)*7	ND		0.8 (0.8)	1.5 (1.4)	3.0 (2.5)	5.0 (4.1)	8.0 (7.0)	11.0 (10.0)
Output	Overload current rating*3	ND		150% 60 s, 200% 3 s (inverse-time characteristics) at surrounding air temperature of 50°C					
Output	Voltage*4			Three-phase 200 to 240 V					
Output	Regenerative braking	Brake transistor		Not used		Built-in			
Output	Regenerative braking	Maximum brake torque*5		150%		100%		50%	20%
Power supply	Rated input AC voltage/frequency			Single-phase 200 to 240 V, 50/60 Hz					
Power supply	Permissible AC voltage fluctuation			170 to 264 V, 50/60 Hz					
Power supply	Permissible frequency fluctuation			±5%					
Power supply	Rated input current (A)*8	Without DC reactor	ND	2.3	4.1	7.9	11.2	17.9	25.0
Power supply	Rated input current (A)*8	With DC reactor	ND	1.4	2.6	5.2	8.7	13.9	19.1
Power supply	Power supply capacity (kVA)*6	Without DC reactor	ND	0.5	0.9	1.7	2.5	3.9	5.5
Power supply	Power supply capacity (kVA)*6	With DC reactor	ND	0.3	0.6	1.1	1.9	3.0	4.2
Protective structure (IEC 60529)				Open type (IP20)					
Cooling system				Natural				Forced air	
Approx. mass (kg)				0.5	0.5	0.8	1.3	1.4	1.9

*1 The applicable motor capacity indicated is the maximum capacity applicable for use of the Mitsubishi Electric 4-pole standard motor.

*2 The rated output capacity is the value with respect to 230 V output voltage.

*3 The percentage of the overload current rating is the ratio of the overload current to the inverter's rated output current. For repeated duty, allow time for the inverter and motor to return to or below the temperatures under 100% load. For single-phase power input model, the bus voltage decreases to power failure detection level and the load of 100% or higher may not be available if the automatic restart after instantaneous power failure function (**Pr.57**) or the power failure stop function (**Pr.261**) is set and power supply voltage is low while the load increases.

*4 The maximum output voltage does not exceed the power supply voltage. The maximum output voltage can be changed within the setting range.

The maximum point of the voltage waveform at the output side of the inverter is approximately the power supply voltage multiplied by $\sqrt{2}$.

*5 The amount of braking torque is the average short-term torque (which varies depending on motor loss) that is generated when a motor decelerates in the shortest time by itself from 60 Hz. It is not continuous regenerative torque. The average deceleration torque becomes lower when a motor decelerates from a frequency higher than the base frequency. The inverter is not equipped with a built-in brake resistor. Use an option brake resistor for an operation with large regenerative power (not available for the FR-E820S-0008(0.1K) and FR-E820S-0015(0.2K)). The brake unit (FR-BU2) can be also used.

*6 The power supply capacity varies with the value of the input power impedance (including those of the input reactor and cables).

*7 The value in parentheses is the rated output current when the low acoustic noise operation is performed with the surrounding air temperature exceeding 40°C while 2 kHz or higher value is selected in **Pr.72 PWM frequency selection**.

*8 The rated input current is the value at a rated output voltage. The input power impedances (including those of the input reactor and cables) affect the value.

4.2 Motor rating

4.2.1 Mitsubishi Electric high-performance energy-saving motor with encoder SF-PR-SC

◆ Motor specifications (SF-PR-SC)

■ 200 V class

Motor model	SF-PR-SC-1K-4P	SF-PR-SC-2K-4P	SF-PR-SC-3K-4P	SF-PR-SC-5K-4P	SF-PR-SC-7K-4P	SF-PR-SC-11K-4P	SF-PR-SC-15K-4P	SF-PR-SC-18K-4P	SF-PR-SC-22K-4P	SF-PR-SC-30K-4P
Applicable inverter model (ND rating)[*1]	FR-E820-1.5K	FR-E820-2.2K	FR-E820-3.7K	FR-E820-5.5K	FR-E820-7.5K	FR-E820-11K	FR-E820-15K	FR-E820-18.5K	FR-E820-22K	FR-E820-22K (LD rating)
Applicable inverter rated current (A) (ND rating)[*2]	8.00	11.00	17.50	24.00	33.00	47.00	60.00	76.00	90.00	115.00
Rated output power (kW)	1.5	2.2	3.7	5.5	7.5	11	15	18.5	22	30
Number of motor poles	4									
Rated motor current (A)	6.00	8.80	14.40	20.80	28.00	40.00	54.00	66.00	78.00	105.00
Rated torque (N·m)	7.96	11.67	19.63	29.18	39.79	58.36	79.58	98.15	116.72	159.17
Maximum torque at 150% 60 s (N·m)	11.94	17.51	29.45	43.77	59.69	87.54	119.38	147.23	175.08	191.00
Rated frequency (Hz)	60									
Maximum permissible frequency (Hz)	100									
Frame No.	90L	100L	112M	132S	132M	160M	160L	180M	180M	180L
Inertia moment J ($\times 10^{-4}$ kg·m^2)	64	90	170	330	410	850	1100	1700	1900	2310
Noise	75 dB or less									
Surrounding air temperature and humidity	-10°C to +40°C (non-freezing), 100% RH or less (non-condensing)									
Protective structure	IP44 (dustproof/waterproof type: IP55)									
Cooling system	Totally-enclosed fan-cooled type (IC411)									
Detector	NOC-HP2048-2MHT, 2048 pulses, complementary, +12/24 VDC power supply[*3]									
Insulation class	120(E)	120(E)	120(E)	130(B)	130(B)	130(B)	130(B)	130(B)	130(B)	155(F)
Vibration rank	V15	V10				V15				
Approx. mass (kg)	28	36	47	65	75	120	135	160	170	190
Special specifications	Flange type (frame numbers up to 160), anti-corrosive coating (type 3), NTC thermistor, IP55, and others									

■ 400 V class

Motor model	SF-PR-SC-1K-4PH	SF-PR-SC-2K-4PH	SF-PR-SC-3K-4PH	SF-PR-SC-5K-4PH	SF-PR-SC-7K-4PH	SF-PR-SC-11K-4PH	SF-PR-SC-15K-4PH	SF-PR-SC-18K-4PH	SF-PR-SC-22K-4PH	SF-PR-SC-30K-4PH
Applicable inverter model (ND rating)*1	FR-E840-1.5K	FR-E840-2.2K	FR-E840-3.7K	FR-E840-5.5K	FR-E840-7.5K	FR-E840-11K	FR-E840-15K	FR-E840-18.5K	FR-E840-22K	FR-E840-22K (LD rating)
Applicable inverter rated current (A) (ND rating)*2	4.00	6.00	9.50	12.00	17.00	23.00	30.00	38.00	44.00	60.00
Rated output power (kW)	1.5	2.2	3.7	5.5	7.5	11	15	18.5	22	30
Number of motor poles	4									
Rated motor current (A)	3.00	4.40	7.20	10.40	14.00	20.00	27.00	33.00	39.00	52.50
Rated torque (N·m)	7.96	11.67	19.63	29.18	39.79	58.36	79.58	98.15	116.72	159.17
Maximum torque at 150% 60 s (N·m)	11.94	17.51	29.45	43.77	59.69	87.54	119.38	147.23	175.08	191.00
Rated frequency (Hz)	60 (1800 r/min)									
Maximum permissible frequency (Hz)	100 (3000 r/min)									
Frame No.	90L	100L	112M	132S	132M	160M	160L	180M	180M	180L
Inertia moment J ($\times 10^{-4}$ kg·m^2)	64	90	170	330	410	850	1100	1700	1900	2310
Noise	75 dB or less									
Surrounding air temperature and humidity	-10 to +40°C (non-freezing), 100% RH or less (non-condensing)									
Protective structure	IP44 (dustproof/waterproof type: IP55)									
Cooling system	Totally-enclosed fan-cooled type (IC411)									
Detector	NOC-HP2048-2MHT, 2048 pulses, complementary, +12/24 VDC power supply*3									
Insulation class	120(E)	120(E)	120(E)	130(B)	130(B)	130(B)	130(B)	130(B)	130(B)	155(F)
Vibration rank	V15	V10				V15				
Approx. mass (kg)	28	36	47	65	75	120	135	160	170	190
Special specifications	Flange type (frame numbers up to 160), anti-corrosive coating (type 3), NTC thermistor, IP55, and others									

*1 The model and the rated current of the inverter are applicable when a 4-pole motor is used.
*2 The value shown is applicable to the motor at high carrier frequency (**Pr.72** = "6" and **Pr.240** = "0").
*3 A separate power supply (12 to 24 V) is required for the encoder.

◆ Motor torque (SF-PR-SC)

The torque characteristics of the motor driven by the inverter are shown in graph form as follows.
The motor is driven by the inverter at ND rating. The overload capacity decreases for the LD rating. Observe the specified range of the inverter.

SF-PR-SC

1.5 to 2.2 (kW)

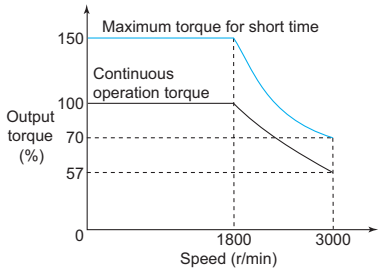

3.7 to 22 (kW)

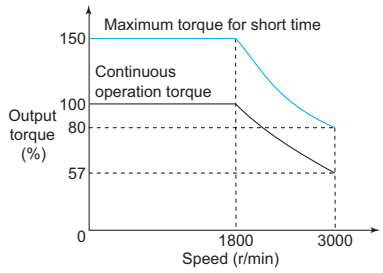

4.2.2 Mitsubishi Electric Vector control dedicated motor SF-V5RU

◆ Motor specifications (SF-V5RU)

■ 200 V class

Motor model: SF-V5RU[]K		1	2	3	5	7	11	15	18
Applicable inverter model: FR-E820-[]K (ND rating)		2.2	3.7	5.5	7.5	11	15	18.5	22
Rated output power (kW)		1.5	2.2	3.7	5.5	7.5	11	15	18.5
Rated current (A)		8.5	11.5	17.6	28.5	37.5	54	72.8	88
Rated torque (N·m)		9.55	14.1	23.6	35.0	47.7	70.0	95.5	118
Maximum torque at 150% 60 s (N·m)		14.3	21.1	35.4	52.4	71.6	105	143	176
Rated speed (r/min)		1500							
Maximum speed (r/min)		3000[*1]							
Frame No.		90L	100L	112M	132S	132M	160M	160L	180M
Inertia moment J (×10^{-4} kg·m^2)		67.5	105	175	275	400	750	875	1725
Noise[*5]		75 dB or less							
Cooling fan (with thermal protector)[*6*7]	Voltage	Single-phase 200 V 50 Hz / Single-phase 200 to 230 V 60 Hz					Three-phase 200 V 50 Hz / Three-phase 200 to 230 V 60 Hz		
	Input[*2]	36/55 W (0.26/0.32 A)			22/28 W (0.11/0.13 A)		55/71 W (0.37/0.39 A)		
	Recommended thermal setting	0.36 A			0.18 A		0.51 A		
Surrounding air temperature and humidity		-10 to +40°C (non-freezing), 90% RH or less (non-condensing)							
Structure (Protection rating)		Totally enclosed forced ventilated (Motor: IP44, Cooling fan: IP23S)[*3]							
Detector		Encoder: 2048 pulses/rev, Phases A, B, and Z output, +12/24 VDC power supply[*5]							
Equipment		Encoder, thermal protector, fan							
Insulation class		F							
Vibration rank		V10							
Approx. mass (kg)		24	33	41	52	62	99	113	138

■ 400 V class

Motor model: SF-V5RUH[]K		1	2	3	5	7	11	15	18
Applicable inverter model: FR-E840-[]K (ND rating)		2.2	2.2	3.7	7.5	11	15	18.5	22
Rated output power (kW)		1.5	2.2	3.7	5.5	7.5	11	15	18.5
Rated current (A)		4.2	5.8	8.8	14.5	18.5	27.5	35.5	44
Rated torque (N·m)		9.55	14.1	23.6	35.0	47.7	70.5	95.5	118
Maximum torque at 150% 60 s (N·m)		14.3	21.1	35.4	52.4	71.6	105	143	176
Rated speed (r/min)		1500							
Maximum speed (r/min)		3000[*1]							
Frame No.		90L	100L	112M	132S	132M	160M	160L	180M
Inertia moment J (×10^{-4} kg·m^2)		67.5	105	175	275	400	750	875	1725
Noise[*5]		75 dB or less							
Cooling fan (with thermal protector)[*6*7]	Voltage	Single-phase 200 V 50 Hz / Single-phase 200 to 230 V 60 Hz				Three-phase 380 to 400 V 50 Hz / Three-phase 400 to 460 V 60 Hz			
	Input[*2]	36/55 W (0.26/0.32 A)			22/28 W (0.11/0.13 A)		55/71 W (0.19/0.19 A)		
	Recommended thermal setting	0.36 A			0.18 A		0.25 A		
Surrounding air temperature and humidity		-10 to +40°C (non-freezing), 90% RH or less (non-condensing)							
Structure (Protection rating)		Totally enclosed forced ventilated (Motor: IP44, Cooling fan: IP23S)[*3]							
Detector		Encoder: 2048 pulses/rev, Phases A, B, and Z output, +12/24 VDC power supply[*5]							
Equipment		Encoder, thermal protector, fan							
Insulation class		F							
Vibration rank		V10							
Approx. mass (kg)		24	33	41	52	62	99	113	138

*1 The maximum speed of a 3.7 kW motor or less is 3600 r/min. Consult our sales office for use of these motor.

*2 Power (current) at 50/60 Hz.

*3 Since a brake motor has a window for gap check, the protection rating of both the cooling fan section and brake section of the motor is IP20. The letter S in IP23S is an additional code indicating that a cooling fan was checked for water protection while it is stationary.

*4 The value shown is applicable to the motor at high carrier frequency (**Pr.72** = 6 and **Pr.240** = 0).

*5 The 12/24 V power supply is required for the encoder.

*6 The cooling fan is equipped with a thermal protector. The cooling fan stops when the coil temperature equals or exceeds the specified value in order to protect the fan motor. A restrained cooling fan or degraded fan motor insulation could be causes for the rise in coil temperature. The cooling fan re-starts when the coil temperature drops to normal.

*7 The cooling fan voltage and input values are the basic specifications of the cooling fan alone and free air values. The input value becomes slightly larger when it is rotated by this motor due to an increased workload, but the cooling fan can be used as it is. When preparing a thermal relay at the user side, use the recommended thermal setting.

◆ Motor torque (SF-V5RU)

The torque characteristics of the SF-V5RU series driven by the inverter are shown in graph form as follows.

These are the case of the motor driven by the inverter at ND rating. The overload capacity decreases for the LD rating. Observe the specified range of the inverter.

SF-V5RU (1500 r/min series)

1.5 to 18.5 (kW)

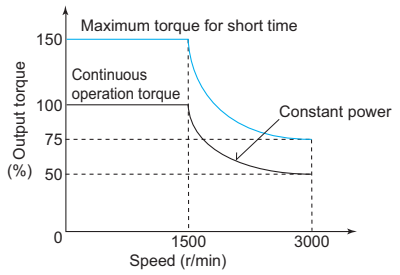

- The maximum speed of a 3.7 kW motor or less is 3600 r/min. Consult our sales office for use of these motor.
- The maximum speed of a brake motor is 1800 r/min.

4.2.3 PM motor MM-GKR

◆ Motor specifications

MM-GKR 1 3 □ □ □ □

A B C D E F

- A: Rated output power

Symbol	Rated output power (kW)
1	0.1*1
2	0.2
4	0.4
7	0.75

*1 Electromagnetic brake equipped model is not applicable.

- B: Rated speed

Symbol	Rated speed (r/min)
3	3000

- C: Electromagnetic brake

Symbol	Electromagnetic brake
None	Without
B	With

- D: Oil seal

Symbol	Oil seal
None	Without
J	With*1*2

*1 The reduction gear equipped models do not have the oil seal.
*2 The oil seal model has an outline dimension different from the standard motor. For details, contact your sales representative.

- E: Reduction gear

Symbol	Reduction gear*1*2
None	Without
G0	For general industrial machine (flange mounting)

*1 The reduction gear equipped models do not have the oil seal.
*2 Electromagnetic brake equipped model is not applicable.

- F: Shaft end

Symbol	Shaft end
None	Standard (straight shaft)
K	Key shaft (with key)*1
D	D-cut shaft*1*2

*1 For the applicable models and detailed specifications, refer to the sensorless servo catalog.
*2 Electromagnetic brake equipped model is not applicable.

■ Motor specifications (standard)

Motor model		MM-GKR13	MM-GKR23	MM-GKR43	MM-GKR73
Applicable inverter model*10		FR-E820(S)-0.1K	FR-E820(S)-0.2K	FR-E820(S)-0.4K	FR-E820(S)-0.75K
Power supply capacity (kVA)*2		0.3	0.5	0.9	1.3
Continuous characteristics	Rated output power (kW)	0.1	0.2	0.4	0.75
	Rated torque (N·m)*3	0.32	0.64	1.3	2.4
Maximum torque (N·m)		0.64	1.3	2.5	4.84
Rated speed (r/min)		3000			
Maximum speed (r/min)		3000			
Instantaneous permissible speed (r/min)		3450			
Power rate at continuous constant-torque (kW/s)		15.0	21.7	43.7	46.0
Number of poles		10			
Rated current (A)		0.65	1.08	1.94	3.34
Maximum current (A)		1.3	2.2	3.9	6.7
Inertia moment ($\times 10^{-4}$ kg·m^2)		0.0676	0.187	0.371	1.24
Recommended load inertia moment ratio*4		10 times max.			
Speed/position detector		None			
Oil seal		Not provided (The oil seal model is also available (MM-GKR_J).)			
Insulation class		B: 130°C			
Structure		Totally enclosed self-cooling			
Protective structure		IP65*5			
Environment*7	Surrounding air temperature	Operation: 0°C to +40°C (non-freezing) Storage: -15°C to +70°C (non-freezing)			
	Ambient humidity	Operation: 10% to 80% RH or less (non-condensing) Storage: 10% to 90% RH or less (non-condensing)			
	Atmosphere	Indoors (no direct sun light) and free from corrosive gas, flammable gas, oil mist, dust and dirt, etc.			
	Altitude	Maximum 1000 m			
	Vibration*6	X: 49 m/s^2, Y: 49 m/s^2			
Vibration rank		V10*8			
Permissible load on the shaft*9	L (mm)	25	30	30	40
	Radial (N)	88	245	245	392
	Thrust (N)	59	98	98	147
Mass (kg)		0.40	0.77	1.3	2.7

*1 The above characteristics apply when the rated AC voltage is input from the inverter (refer to page 127). The rated output power or speed is not guaranteed at low supply voltages.

*2 The power supply capacity varies with the value of the input power impedance (including those of the input reactor and cables).

*3 To drive a machine that produces unbalanced torque, such as a lift axis, the unbalanced torque is recommended to be equal to or less than the 70% of the rated torque.

*4 This is the ratio of the moment of load inertia to the moment of motor inertia under position control. If the load inertia moment ratio exceeds the described value, contact your sales representative.

*5 Except for the shaft hole. For the reduction gear equipped model, the protective structure is equivalent to IP44.

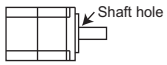

*6 For the vibration direction, X indicates the direction of the motor output axis and Y indicates the direction perpendicular to the motor output axis. The numbers are values at points where the maximum values are indicated (normally the bracket at the non-load side).
Bearings are subjected to fretting while the motor is stopped. Suppress the vibration to about the half of the permissible value.

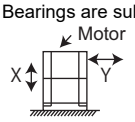

*7 The standard motor may not be used under the condition where it is constantly exposed to oil mist, oil, or water. For details, contact your sales representative.

*8 "V10" means that the vibration amplitude of the single motor is 10 μm or lower. The following figure shows the installation orientation of the motor and measurement position at the vibration degree measurement.

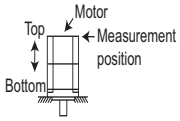

*9 For the permissible load on the shaft, refer to the following figure. On the shaft, do not apply a load exceeding the value in the table. Each value in the table shows the permissible value for the single load application.

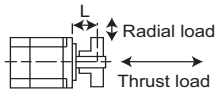

L: Distance from the flange mounting surface to the center of the load

*10 By setting **Pr.80**, a motor with one rank lower capacity than the inverter capacity can be used. To use such a motor, set **Pr.80 Motor capacity** before performing PM parameter initialization. (Refer to the FR-E800 Instruction Manual (Function).)

■ Electromagnetic brake motor specifications

Motor model		MM-GKR23B	MM-GKR43B	MM-GKR73B
Applicable inverter model*3		FR-E820(S)-0.2K	FR-E820(S)-0.4K	FR-E820(S)-0.75K
Continuous characteristics	Rated output power (kW)	0.2	0.4	0.75
	Rated torque (N·m)	0.64	1.3	2.4
Maximum torque (N·m)		1.3	2.5	4.8
Rated speed (r/min)		3000		
Maximum speed (r/min)		3000		
Instantaneous permissible speed (r/min)		3450		
Power rate at continuous constant-torque (kW/s)		19.4	41.3	42.2
Rated current (A)		1.08	1.94	3.34
Maximum current (A)		2.2	3.9	6.7
Inertia moment ($\times 10^{-4}$ kg·m^2)		0.209	0.393	1.35
Speed/position detector		None		
Insulation class		B: 130°C		
Structure		Totally enclosed self-cooling		
Protective structure		IP65*1		
Environment	Surrounding air temperature	Operation: 0°C to +40°C (non-freezing) Storage: -15°C to +70°C (non-freezing)		
	Ambient humidity	Operation: 10% to 80% RH or less (non-condensing) Storage: 10% to 90% RH or less (non-condensing)		
	Atmosphere	Indoors (no direct sunlight)		
	Altitude	Maximum 1000 m		
	Vibration*2	X: 49 m/s^2, Y: 49 m/s^2		
Permissible load on the shaft	L (mm)	30	30	40
	Radial (N)	245	245	392
	Thrust (N)	98	98	147
Mass (kg)		1.2	1.7	3.7

*1 Except for the shaft hole.

*2 For the vibration direction, X indicates the direction of the motor output axis and Y indicates the direction perpendicular to the motor output axis. The numbers are values at points where the maximum values are indicated (normally the bracket at the non-load side).
Bearings are subjected to fretting while the motor is stopped. Suppress the vibration to about the half of the permissible value.

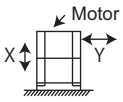

*3 By setting **Pr.80**, a motor with one rank lower capacity than the inverter capacity can be used. To use such a motor, set **Pr.80 Motor capacity** before performing PM parameter initialization. (Refer to the FR-E800 Instruction Manual (Function).)

■ Electromagnetic brake specifications

Electromagnetic brake is intended for emergency use to prevent drop of or keep hold of the workpiece at power failure or fault occurrence during vertical movement. Do not use it for regular braking.

Motor model		MM-GKR23B	MM-GKR43B	MM-GKR73B
Type*1		Power off (spring-set) safety brake		
Rated voltage*2		24 VDC $^{0}_{-10}$%		
Power consumption (W) at 20°C		7.9		10
Static friction torque (N·m)		1.3		2.4
Permissible braking work	per operation (J)	22		64
	per hour (J)	220		640
Life expectancy*3	Count of operation (times)	20000		
	Reference braking work (J)	22		64

*1 The manual release is not available. Apply 24 VDC power to release the electromagnetic brake electrically.
*2 Separate power source for the electromagnetic brake.
*3 The brake gap cannot be adjusted though it widens as the brake lining wears with each braking. The life expectancy of brake therefore refers to a period of time during which the brake can be used without adjustment.

■ Reduction gear equipped model specifications Reduction gear equipped model for general industrial machines: G0

Model	Output power (kW)	Reduction ratio	Actual reduction ratio	Inertia moment J (×10^{-4} kg·m^2)*1	Permissible load inertia moment ratio*2 (calculation at motor shaft)	Mass (kg)	Permissible load on the shaft*5	
							Permissible radial load (N)	Permissible thrust load (N)
MM-GKR13G0	0.1	1/5	42/221	0.0720	10 times or lower of the moment of motor inertia	1.3	150	200
		1/12	9/104	0.0706			240	320
		1/20	12/247	0.0703			370	450
		1/30	24/713	0.0768		2.4	500	500
MM-GKR23G0	0.2	1/5	44/217	0.222		2.8	330	350
		1/12	48/589	0.204			710	720
		1/20	32/651	0.201			780	780
		1/30	24/713	0.200			780	780
MM-GKR43G0	0.4	1/5	15/77	0.406		3.2	330	350
		1/12	9/110	0.390			710	720
		1/20	9/189	0.399		4.3	760	780
		1/30	12/351	0.398			760	780
MM-GKR73G0	0.75	1/5	19/95	1.37		5.5	430	430
		1/12	40/475	1.32			620	620
		1/20	14/285	1.29		7.3	970	960
		1/30	25/722	1.28			970	980

Item	Specification
Installation method	Flange mounting
Installation orientation	Any orientation
Lubrication method	Grease (already filled)
Rotation direction of output axis	Same as that of the motor output axis
Backlash*4	60 minutes or less at the output shaft of the reduction gear
Maximum torque	Twice of the rated torque (For the rated torque, refer to page 127.)
Permissible speed (motor axis)	3000 r/min (Instantaneous permissible speed: 3450 r/min)
IP rating	Equivalent to IP44
Vibration resistance	X: 29.4 m/s^2, Y: 29.4 m/s^2
Reduction gear efficiency*3	80% or higher

*1 This value is a value at the shaft of the motor with a reduction gear.
*2 If the value exceeds the described value, contact your sales representative.
*3 The reduction gear efficiency differs depending on the reduction ratio. Additionally, the reduction gear efficiency varies depending on operating conditions, such as the output torque, rotation speed, and temperature.
The value in the table is a typical value for the rated torque at the rated speed and at a room temperature, but not a guaranteed value.
*4 The following conversion formula is used for the unit conversion of the backlash: 1 minute = 0.0167°
*5 The permissible radial load is the value at the center of the output shaft of the reduction gear. On the shaft, do not apply a load exceeding the value in the table. Each value in the table shows the permissible value for the single load application.

Q: Shaft length

◆ Motor torque characteristic

MM-GKR13	MM-GKR23 to 73
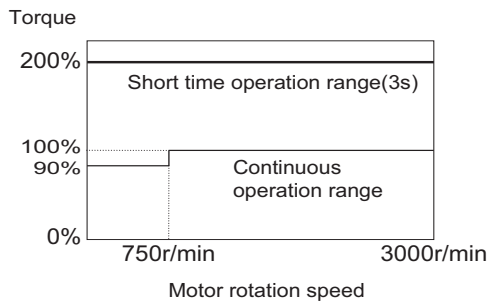	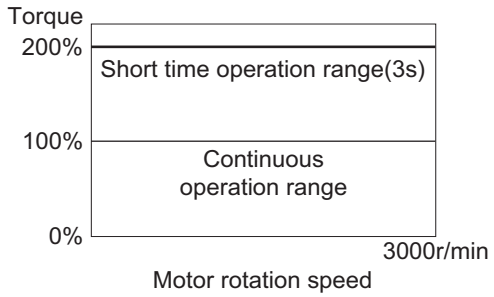

- When the input voltage is low, the torque may be reduced.
- The continuous operation torque becomes 80% at 6 r/min or lower.
- When driving the motor under high load in low-speed range (especially at 6 r/min or lower), the protective function by electronic thermal O/L relay (E.THT or E.THM) may be activated and the short time operation range torque may not be generated.

4.2.4 PM motor EM-A

◆ Motor specifications

EM-AMF □ □ □ 5.5kW 3000r/min 200V

A B C D

- A: Electromagnetic brake

Symbol	Electromagnetic brake
None	Without
B	With

- B: Shaft end

Symbol	Shaft end
None	Standard
K	Key shaft

- C: Protective structure

Symbol	Protective structure
None	IP44
W	IP65

- D: Output power

Symbol	Description
5.5, 7.5	Rated capacity (kW)

◆ Specifications of the dedicated PM motor (EM-A motor)

■ Motor specifications (standard)

Motor model		EM-AMF5.5kW	EM-AMF7.5kW
Applicable inverter model*7		FR-E820-5.5K	FR-E820-7.5K
Rated speed (r/min)		3000	
Maximum speed (r/min)		4000	
Number of poles		6	
Rated current (A)		22	31
Rated torque (N·m)*1*8		17.50	23.88
Maximum torque (%)		200%	
Insulation class		155(F)	
Recommended load inertia moment ratio		10 times max.	
Structure		Totally enclosed self-cooling	
Protective structure		IP44*2, IP65*2*3	
Environment*5	Surrounding air temperature and humidity	0°C to +40°C (non-freezing), 90% RH or less (non-condensing)	
	Altitude	Maximum 1000 m	
	Vibration*4	4.9 m/s^2 or less (momentarily tolerable up to 9.8 m/s^2)	
Permissible load on the shaft*6	L (mm)	41.5	
	Radial (N)	1470	
	Thrust (N)	980	
Mass (kg)	Without brake	28	34
	With brake	34	40

*1 The above characteristics apply when the rated AC voltage is input from the inverter (refer to page 131). The rated output power or speed is not guaranteed at low supply voltages.

*2 Except for the shaft hole.

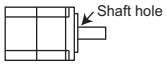

*3 Applicable for EM-AMF[][]W motors.

*4 For the vibration direction, X indicates the direction of the motor output axis and Y indicates the direction perpendicular to the motor output axis. The numbers are values at points where the maximum values are indicated (normally the bracket at the non-load side). Bearings are subjected to fretting while the motor is stopped. Suppress the vibration to about the half of the permissible value.

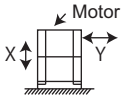

*5 The standard motor may not be used under the condition where it is constantly exposed to oil mist, oil, or water. For details, contact your sales representative.

*6 For the permissible load on the shaft, refer to the following figure. On the shaft, do not apply a load exceeding the value in the table. Each value in the table shows the permissible value for the single load application.

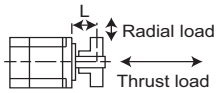

L: Distance from the flange mounting surface to the center of the load

*7 By setting **Pr.80**, a motor with one rank lower capacity than the inverter capacity can be used. To use such a motor, set **Pr.80 Motor capacity** before performing PM parameter initialization. (Refer to the FR-E800 Instruction Manual (Function).)

*8 To drive a machine that produces unbalanced torque, such as a lift axis, the unbalanced torque is recommended to be equal to or less than the 90% of the rated torque.

◆ Motor torque

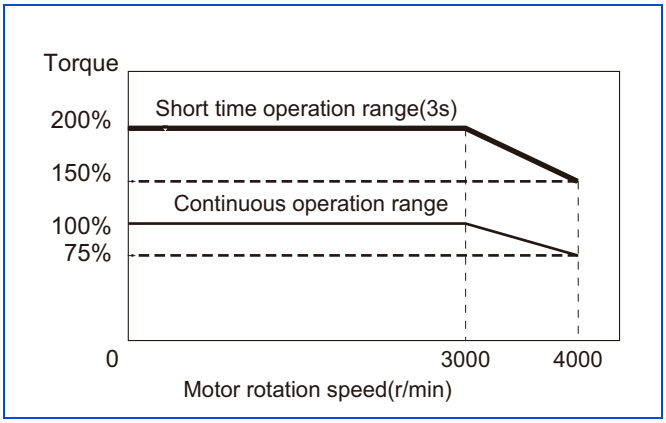

- When the input voltage is low, the torque may be reduced.
- The continuous operation torque is 90% at 10 r/min or less (for 1.5 kW or higher EM-A motor).
- When driving the EM-A motor under high load in the low-speed range (especially at 15 r/min or lower for 0.75 kW or lower, or at 10 r/min or lower for 1.5 kW or higher), the protective function of the electronic thermal O/L relay (E.THT or E.THM) may be activated and short time operation range torque may not be generated.

4.3 Common specifications

Control	Control method		Soft-PWM control / High carrier frequency PWM control
		Induction motor	Selectable among V/F control, Advanced magnetic flux vector control, Real sensorless vector control, and Vector control[*1]
		PM motor	PM sensorless vector control
	Output frequency range	Induction motor	0.2 to 590 Hz (The upper-limit frequency is 400 Hz under Advanced magnetic flux vector control, Real sensorless vector control, and Vector control[*1].)
		PM motor	0.2 to 400 Hz (not operable at a frequency higher than the maximum motor frequency)
	Frequency setting and resolution	Analog input	0.015 Hz /60 Hz at 0 to 10 V / 12 bits (terminals 2 and 4) 0.03 Hz /60 Hz at 0 to 5 V / 11 bits or 0 to 20 mA / 11 bits (terminals 2 and 4)
		Digital input	0.01 Hz
	Frequency accuracy	Analog input	Within ±0.2% of the maximum output frequency (25°C ±10°C)
		Digital input	0.01% or less of the set output frequency
	Voltage/frequency characteristics		Base frequency can be set from 0 to 590 Hz. Constant-torque/variable-torque pattern can be selected (with induction motor only).
	Starting torque	Induction motor	Advanced magnetic flux vector control: 150% at 0.5 Hz, Real sensorless vector control and Vector control[*1]: 200% at 0.3 Hz (0.1K to 3.7K), 150% at 0.3 Hz (5.5K or higher)
		PM motor	50%
	Torque boost		Manual torque boost (induction motor only)
	Acceleration/deceleration time setting		0 to 3600 s (acceleration and deceleration can be set individually), linear or S-pattern acceleration/deceleration modes are available.
	DC injection brake	Induction motor	Operation frequency (0 to 120 Hz), operation time (0 to 10 s), operation voltage (0% to 30%) variable
		PM motor	Operation time (0 to 10 s) variable. Operating voltage (operating current) fixed.
	Stall prevention operation level		Operation current: 0% to 220% variable, with selectable availability of the function
	Torque limit level		Torque limit value can be set (0 to 400% variable). (Real sensorless vector control, Vector control[*1], PM sensorless vector control)
Operation	Frequency setting signal	Analog input	Terminals 2 and 4: 0 to 10 V / 0 to 5 V / 4 to 20 mA (0 to 20 mA)
		Digital input	Input using the operation panel. Input of four-digit BCD (binary-coded decimal) or 16-bit binary (when the option FR-A8AX E kit is installed).
	Start signal		Forward and reverse rotation or start signal automatic self-holding input (3-wire input) can be selected.
	Input signal (standard model: 7, Ethernet model: 2)		Low-speed operation command, Middle-speed operation command, High-speed operation command, Output stop, Forward rotation command, Reverse rotation command, Inverter reset The signal to be input can be changed using **Pr.178 to Pr.184 (Input terminal function selection)**.
	Operational function		Maximum and minimum frequency settings, multi-speed operation, acceleration/deceleration pattern, thermal protection, DC injection brake, starting frequency, JOG operation, output stop (MRS), stall prevention, regeneration avoidance, increased magnetic excitation deceleration, frequency jump, rotation display, automatic restart after instantaneous power failure, remote setting, automatic acceleration/deceleration, retry function, carrier frequency selection, fast-response current limit, forward/reverse rotation prevention, operation mode selection, slip compensation, droop control, speed smoothing control, traverse, auto tuning, applied motor selection, RS-485 communication[*2], Ethernet communication[*4], PID control, easy dancer control, cooling fan operation selection, stop selection (deceleration stop/coasting), power failure time deceleration-to-stop function, stop-on-contact control, PLC function, life diagnosis, maintenance timer, current average monitor, multiple rating, orientation control[*1], speed control, torque control, pre-excitation, torque limit, position control, test operation, safety stop function, emergency drive[*3]
	Output signal	Open collector output (standard model: 2) Relay output (1)	Inverter running, Up to frequency, Fault The signal to be output can be changed using **Pr.190 to Pr.192 (Output terminal function selection)**.
		Pulse train output (FM type inverter)	1440 pulses/s at full scale, 2400 pulses/s at maximum.
		Analog output (AM type inverter)	-10 to +10 V / 12 bits

Protective function	**Fault**	Overcurrent trip during acceleration, Overcurrent trip during constant speed, Overcurrent trip during deceleration or stop, Regenerative overvoltage trip during acceleration, Regenerative overvoltage trip during constant speed, Regenerative overvoltage trip during deceleration or stop, Inverter overload trip (electronic thermal relay function), Motor overload trip (electronic thermal relay function), Heat sink overheat, Undervoltage, Input phase loss[*5], Stall prevention stop, Loss of synchronism detection[*6], Upper limit fault detection, Lower limit fault detection, Brake transistor alarm detection, Output side earth (ground) fault overcurrent, Output short circuit, Output phase loss, External thermal relay operation, PTC thermistor operation[*6], Option fault, Communication option fault, Internal storage device fault, Parameter storage device fault, PU disconnection, Retry count excess, CPU fault, Abnormal output current detection, Inrush current limit circuit fault, USB communication fault, Analog input fault, Safety circuit fault, Overspeed occurrence[*6], Speed deviation excess detection[*1*6], Signal loss detection[*1*6], Excessive position fault[*1*6], Brake sequence fault[*6], Acceleration error[*6], PID signal fault, Ethernet communication fault, Opposite rotation deceleration fault[*6], Internal circuit fault, User definition error by the PLC function, Board combination fault
	Alarm, Warning, Error message	Fan alarm, stall prevention (overcurrent), stall prevention (overvoltage), regenerative brake pre-alarm[*6], electronic thermal relay function pre-alarm, PU stop, maintenance timer alarm, parameter write error, operation panel lock[*6], Password locked[*6], speed limit indication[*6], stroke limit warning[*6], home position return setting error[*6], home position return uncompleted[*6], safety stop, load fault warning, emergency drive in operation[*3*6], Ethernet communication fault[*4], duplicate IP address[*4], IP address fault[*4], incorrect parameter setting, Corrosion level warning
Environment	**Surrounding air temperature**	-20°C to +60°C (The rated current must be reduced at a temperature above 50°C.)
	Surrounding air humidity	95% RH or less (non-condensing) (With circuit board coating (conforming to IEC 60721-3-3:1994 3C2)) 90% RH or less (non-condensing) (Without circuit board coating)
	Storage temperature[*7]	-40°C to +70°C
	Ambience	Indoors (free from corrosive gas, flammable gas, oil mist, dust and dirt)
	Altitude/vibration	Maximum 3000 m[*8], 5.9 m/s^2 or less at 10 to 55 Hz in X, Y, and Z directions

*1 Available when a Vector control compatible option (FR-A8AP E kit) is installed.
*2 Available only for the standard model.
*3 Available for the standard model and the Ethernet model.
*4 Available for the Ethernet model and the safety communication model.
*5 Available for the three-phase power input model.
*6 Not activated in the inverter in the initial state.
*7 Applicable to conditions for a short time, for example, in transit.
*8 For the installation at an altitude above 1000 m, consider a 3% reduction in the rated current per 500 m increase in altitude.

4.4 Outline dimension drawings

The standard model has a setting dial on the operation panel.
The Ethernet model and the safety communication model have UP and DOWN keys on the operation panel.

4.4.1 Inverter outline dimension drawings (Standard model)

FR-E820-0008(0.1K), FR-E820-0015(0.2K), FR-E820-0030(0.4K), FR-E820-0050(0.75K)
FR-E820S-0008(0.1K), FR-E820S-0015(0.2K), FR-E820S-0030(0.4K)

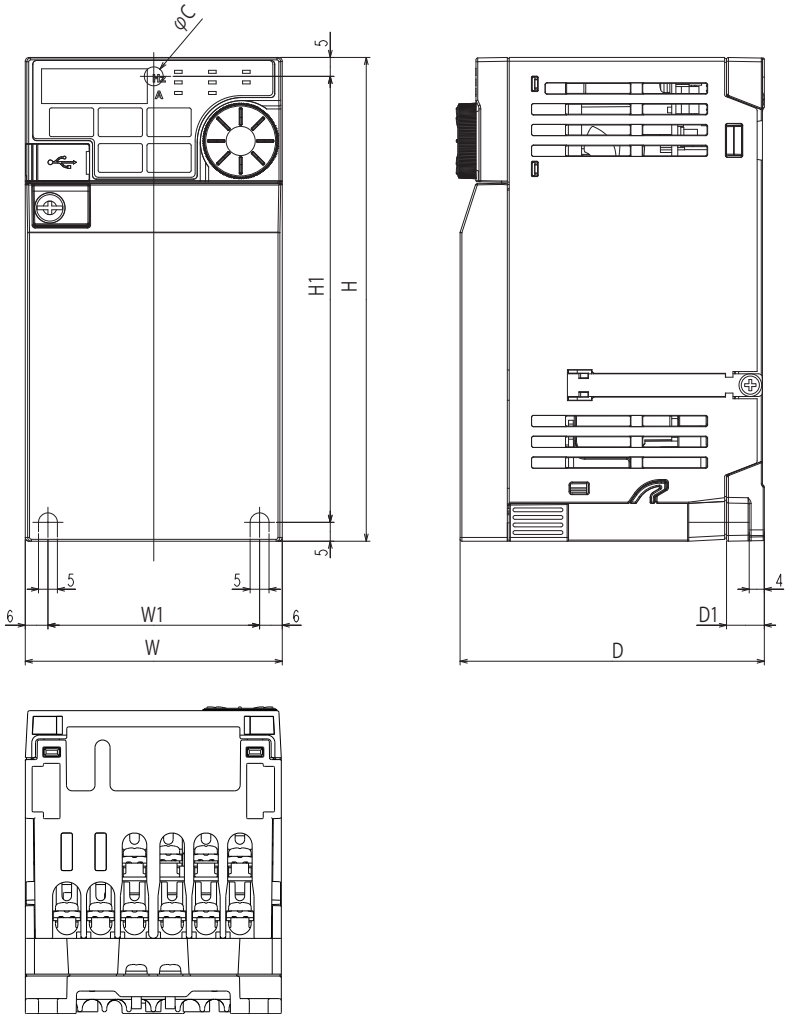

Inverter model	W	W1	H	H1	D	D1	C
FR-E820-0008(0.1K) FR-E820-0015(0.2K)	68	56	128	118	80.5	10	5
FR-E820-0030(0.4K)					112.5	42	
FR-E820-0050(0.75K)					132.5		
FR-E820S-0008(0.1K) FR-E820S-0015(0.2K)					80.5	10	
FR-E820S-0030(0.4K)					142.5	42	

(Unit: mm)

FR-E820-0080(1.5K), FR-E820-0110(2.2K)
FR-E840-0016(0.4K), FR-E840-0026(0.75K), FR-E840-0040(1.5K)
FR-E820S-0050(0.75K), FR-E820S-0080(1.5K)

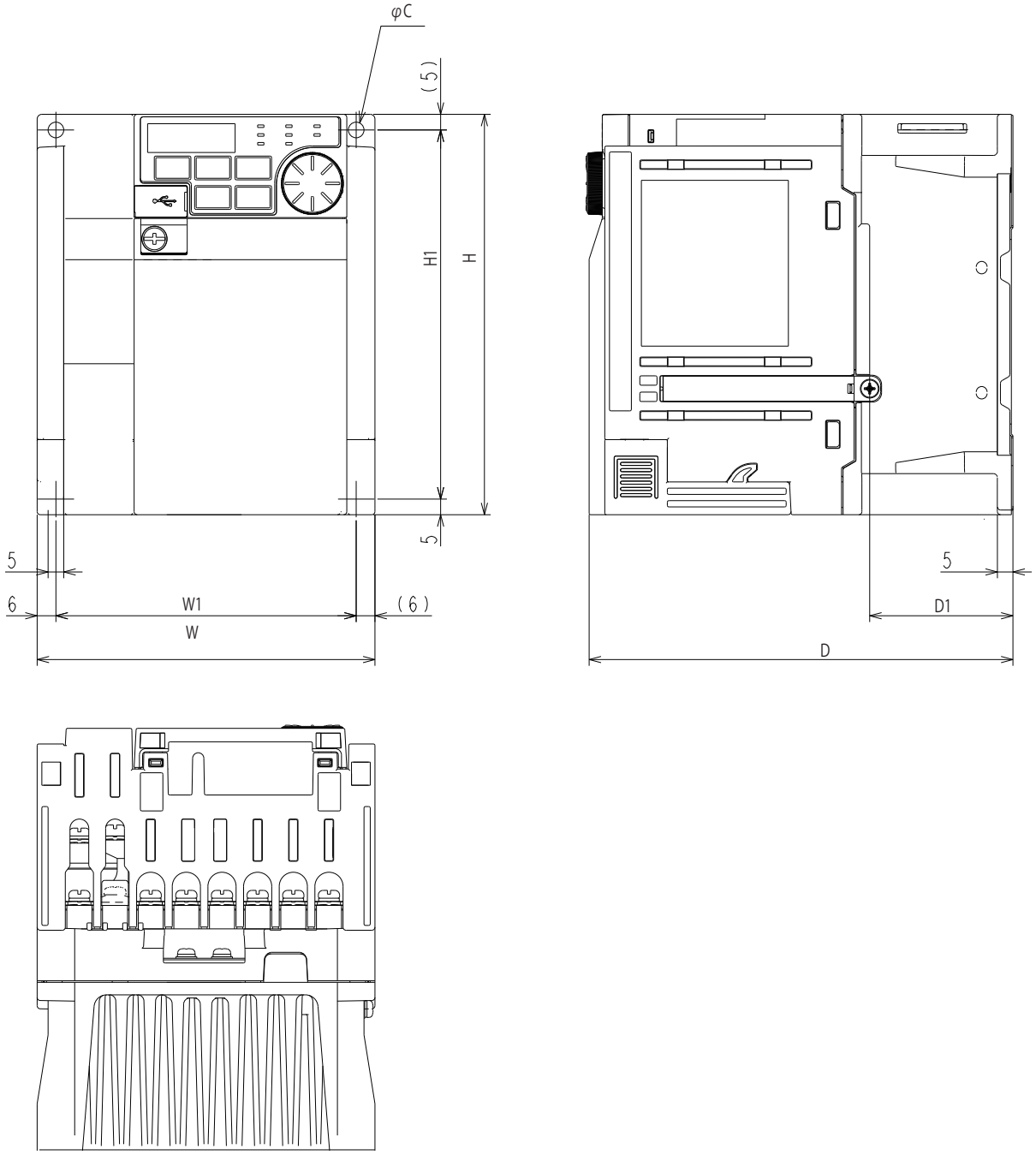

Inverter model	W	W1	H	H1	D	D1	C
FR-E820-0080(1.5K) FR-E820-0110(2.2K)	108	96	128	118	135.5	46	5
FR-E840-0016(0.4K) FR-E840-0026(0.75K)					129.5	40	
FR-E840-0040(1.5K)					135.0	46	
FR-E820S-0050(0.75K)					135	45.5	
FR-E820S-0080(1.5K)					161	46	

(Unit: mm)

FR-E820-0175(3.7K)
FR-E820S-0110(2.2K)

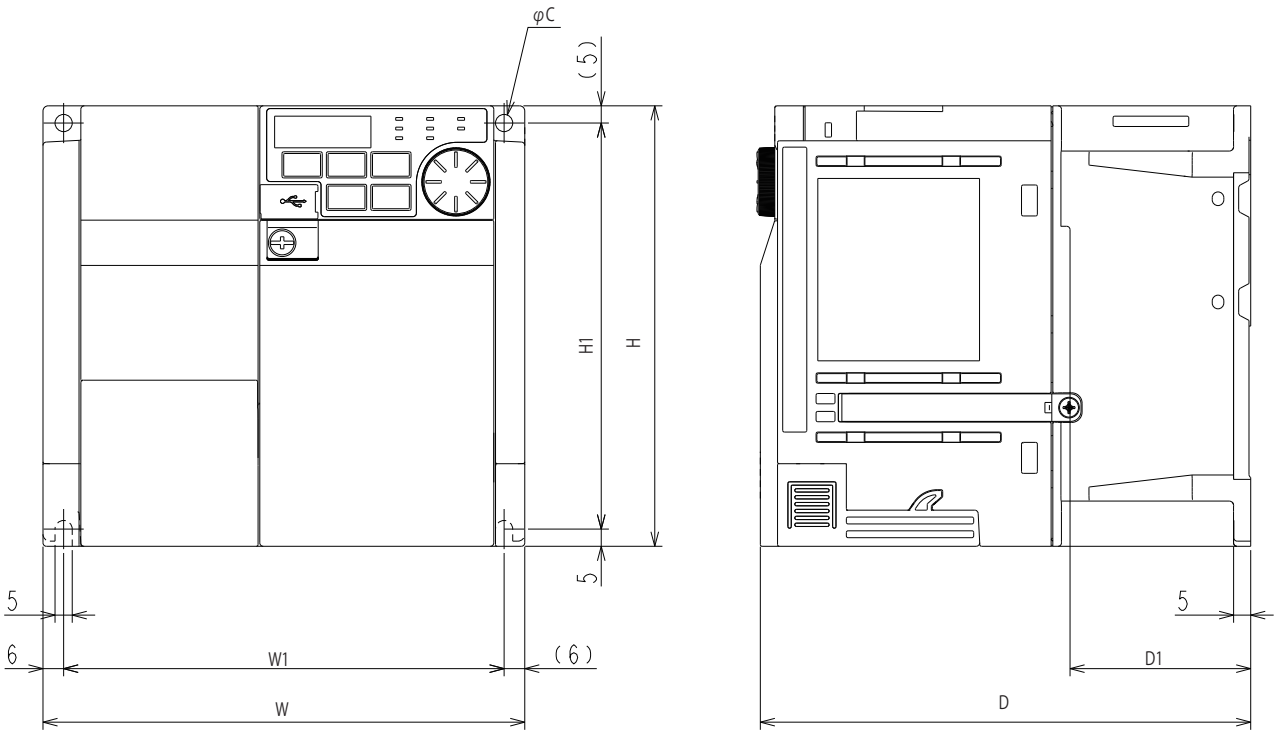

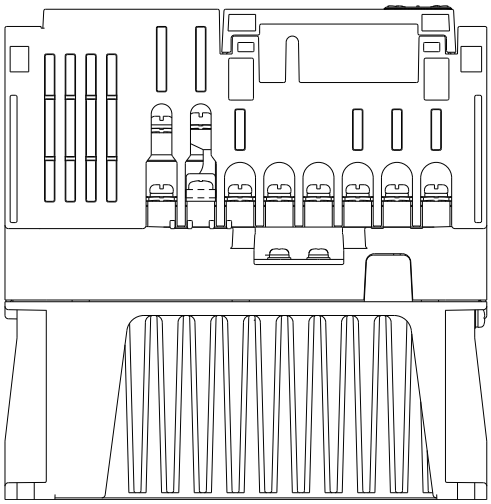

Inverter model	W	W1	H	H1	D	D1	C
FR-E820-0175(3.7K)	140	128	128	118	142.5	52.5	5
FR-E820S-0110(2.2K)							

(Unit: mm)

FR-E840-0060(2.2K), FR-E840-0095(3.7K)

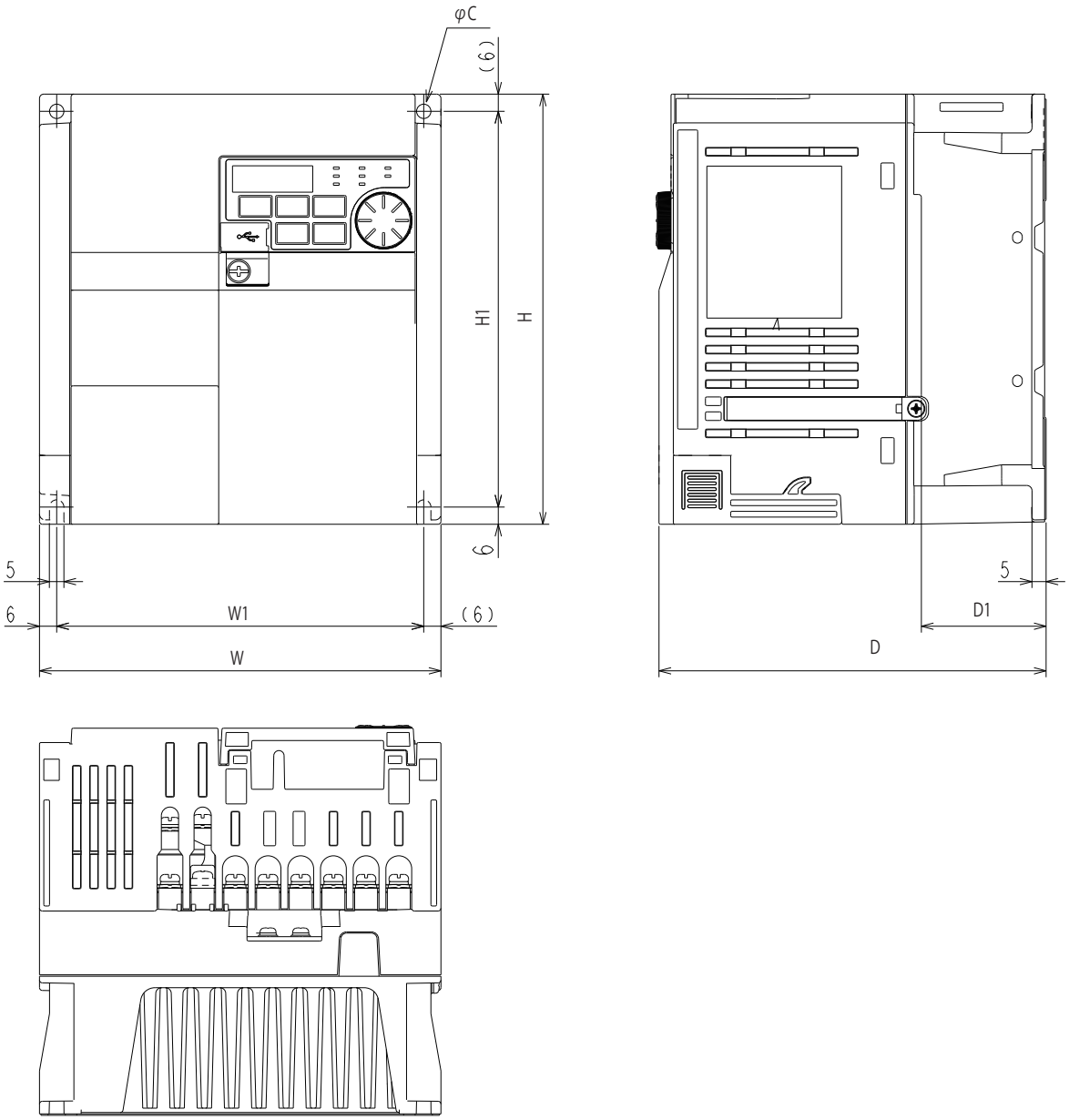

Inverter model	W	W1	H	H1	D	D1	C
FR-E840-0060(2.2K) FR-E840-0095(3.7K)	140	128	150	138	135	43.5	5

(Unit: mm)

FR-E820-0240(5.5K), FR-E820-0330(7.5K)

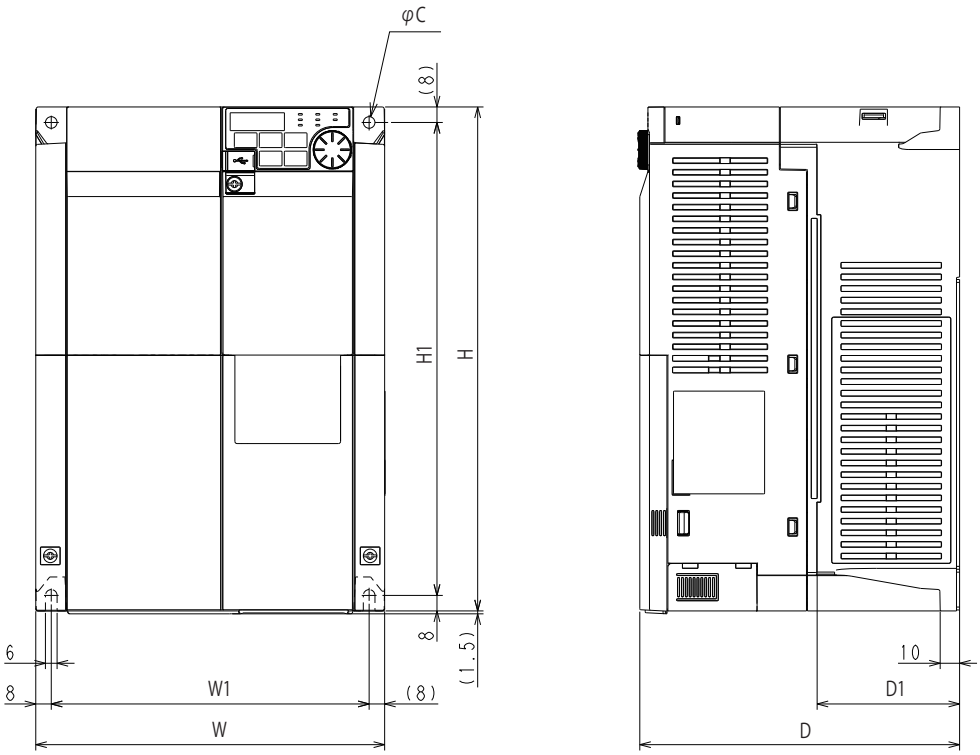

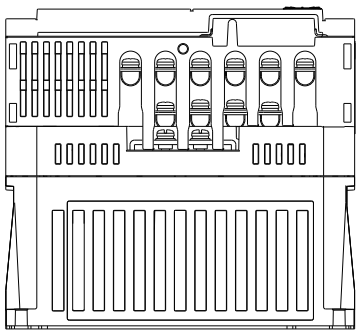

Inverter model	W	W1	H	H1	D	D1	C
FR-E820-0240(5.5K) FR-E820-0330(7.5K)	180	164	260	244	165	71.5	6

(Unit: mm)

FR-E840-0120(5.5K), FR-E840-0170(7.5K)

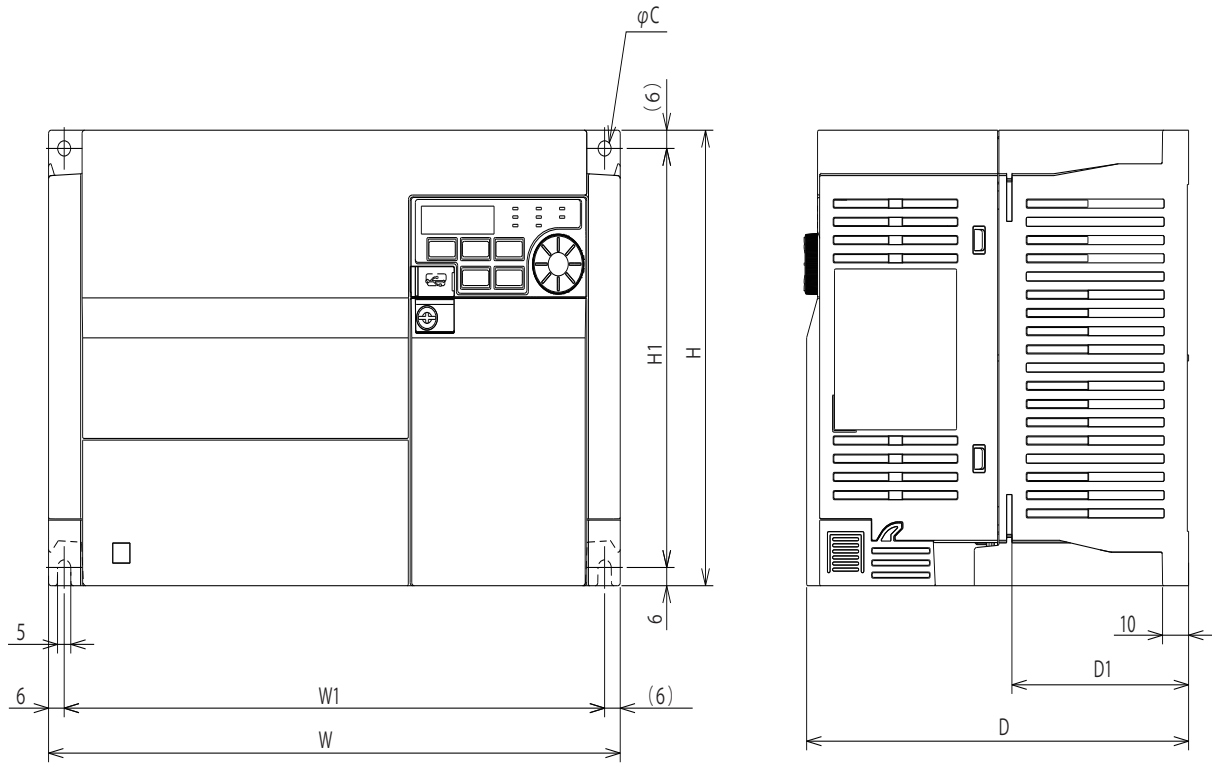

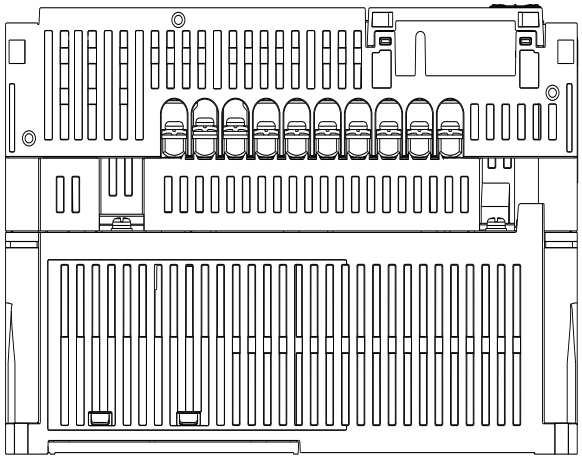

Inverter model	W	W1	H	H1	D	D1	C
FR-E840-0120(5.5K) FR-E840-0170(7.5K)	220	208	150	138	147	68	5

(Unit: mm)

FR-E820-0470(11K), FR-E820-0600(15K)
FR-E840-0230(11K), FR-E840-0300(15K)

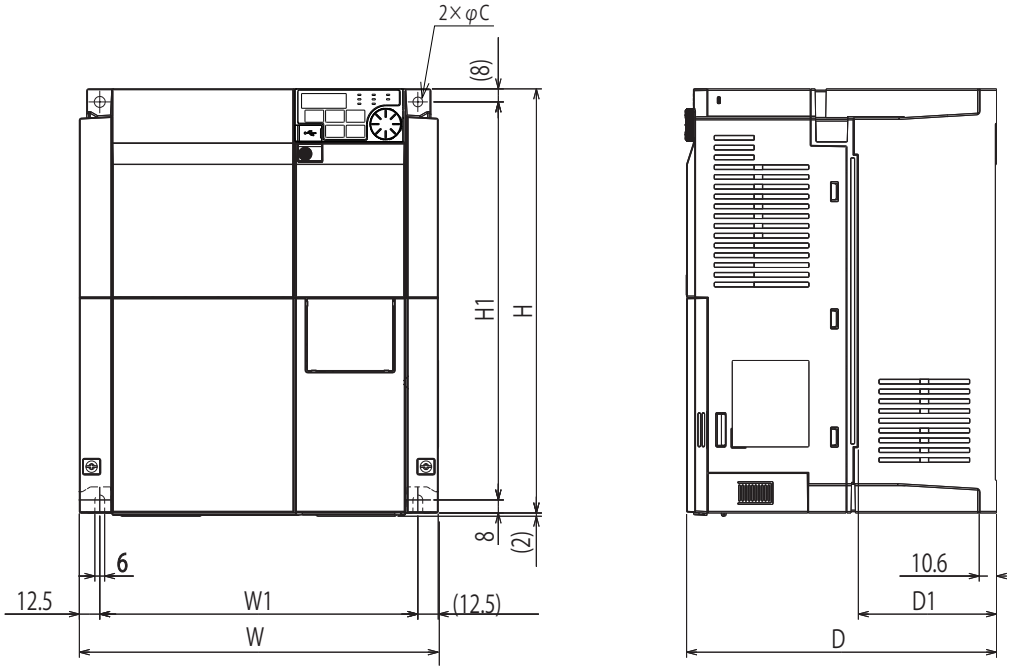

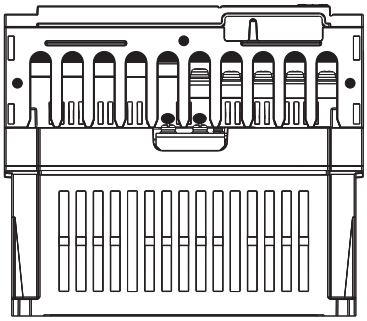

Inverter model	W	W1	H	H1	D	D1	C
FR-E820-0470(11K) FR-E820-0600(15K) FR-E840-0230(11K) FR-E840-0300(15K)	220	195	260	244	190	84.7	6

(Unit: mm)

FR-E820-0760(18.5K), FR-E820-0900(22K)
FR-E840-0380(18.5K), FR-E840-0440(22K)

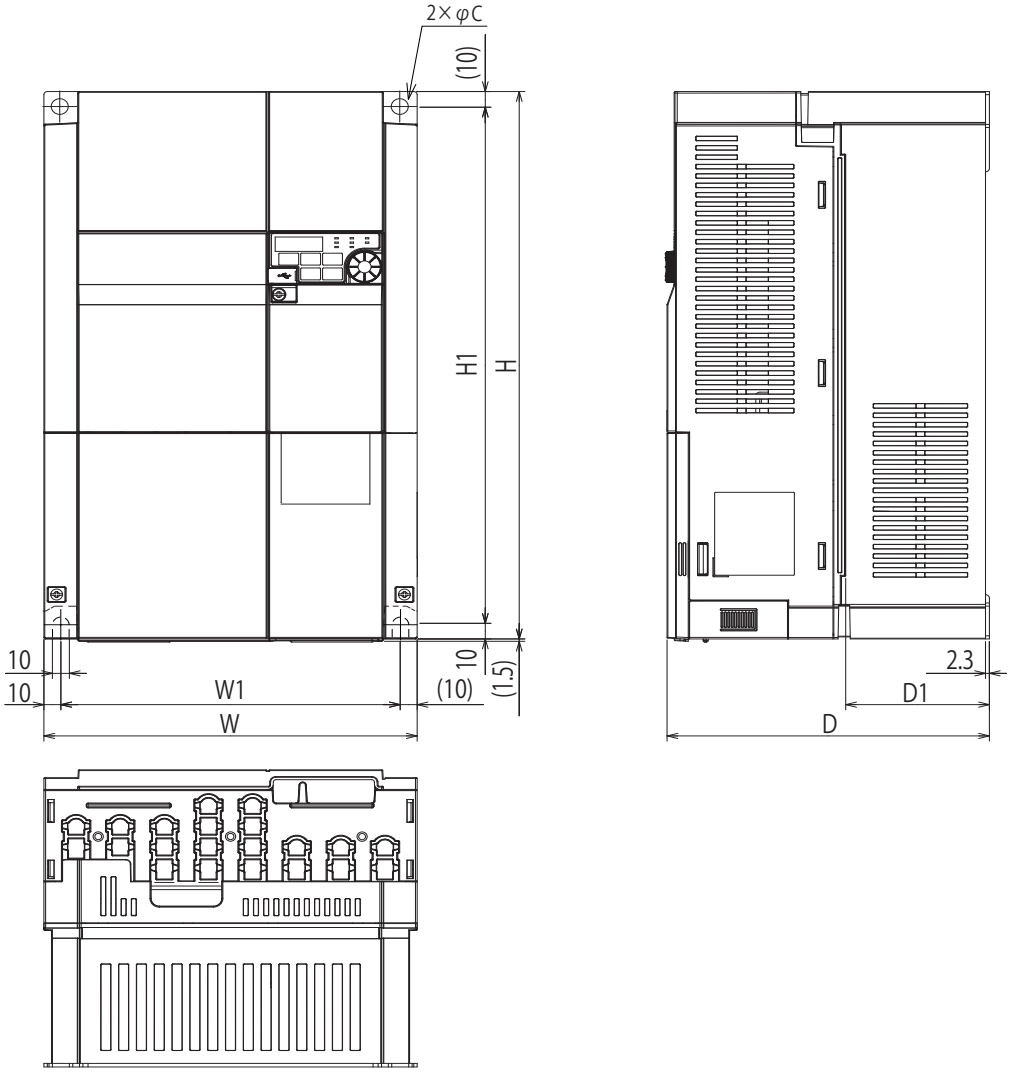

Inverter model	W	W1	H	H1	D	D1	C
FR-E820-0760(18.5K) FR-E820-0900(22K) FR-E840-0380(18.5K) FR-E840-0440(22K)	220	200	350	330	190	84.7	10

(Unit: mm)

4.4.2 Inverter outline dimension drawings (Ethernet model / Safety communication model)

FR-E820-0008(0.1K)E, FR-E820-0015(0.2K)E, FR-E820-0030(0.4K)E, FR-E820-0050(0.75K)E
FR-E820S-0008(0.1K)E, FR-E820S-0015(0.2K)SCE, FR-E820S-0030(0.4K)SCE
FR-E820-0008(0.1K)SCE, FR-E820-0015(0.2K)SCE, FR-E820-0030(0.4K)SCE, FR-E820-0050(0.75K)SCE
FR-E820S-0008(0.1K)SCE, FR-E820S-0015(0.2K)SCE, FR-E820S-0030(0.4K)SCE

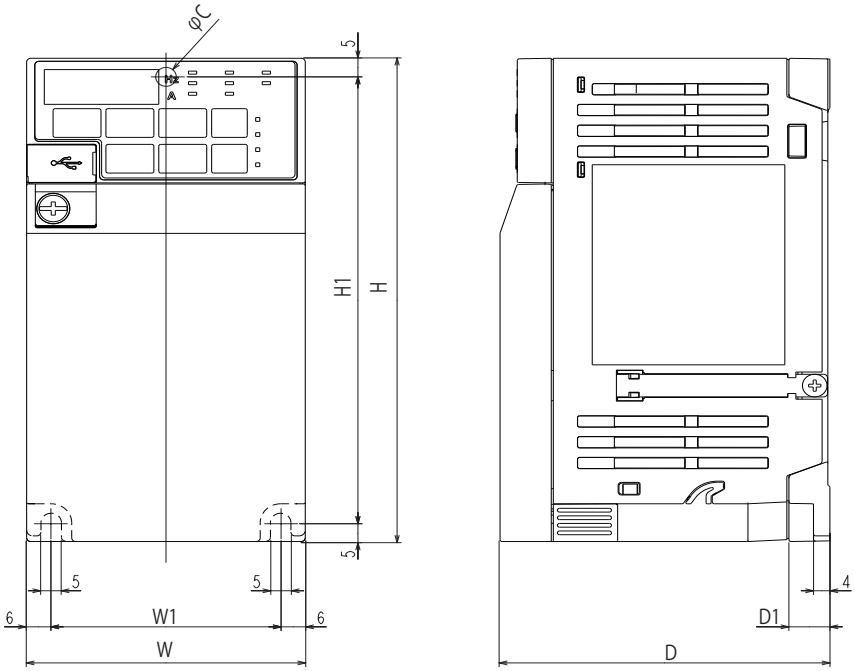

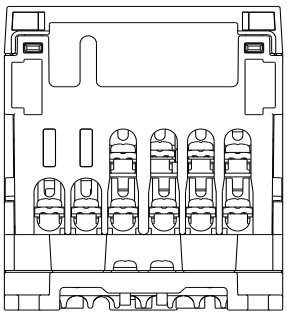

Inverter model	W	W1	H	H1	D	D1	C
FR-E820-0008(0.1K)E FR-E820-0015(0.2K)E FR-E820-0008(0.1K)SCE FR-E820-0015(0.2K)SCE	68	56	128	118	80.5	10	5
FR-E820-0030(0.4K)E FR-E820-0030(0.4K)SCE					112.5	42	
FR-E820-0050(0.75K)E FR-E820-0050(0.75K)SCE					132.5		
FR-E820S-0008(0.1K)E FR-E820S-0015(0.2K)E FR-E820S-0008(0.1K)SCE FR-E820S-0015(0.2K)SCE					80.5	10	
FR-E820S-0030(0.4K)E FR-E820S-0030(0.4K)SCE					142.5	42	

(Unit: mm)

FR-E820-0080(1.5K)E, FR-E820-0110(2.2K)E
FR-E840-0016(0.4K)E, FR-E840-0026(0.75K)E, FR-E840-0040(1.5K)E
FR-E820S-0050(0.75K)E, FR-E820S-0080(1.5K)E
FR-E820-0080(1.5K)SCE, FR-E820-0110(2.2K)SCE
FR-E840-0016(0.4K)SCE, FR-E840-0026(0.75K)SCE, FR-E840-0040(1.5K)SCE
FR-E820S-0050(0.75K)SCE, FR-E820S-0080(1.5K)SCE

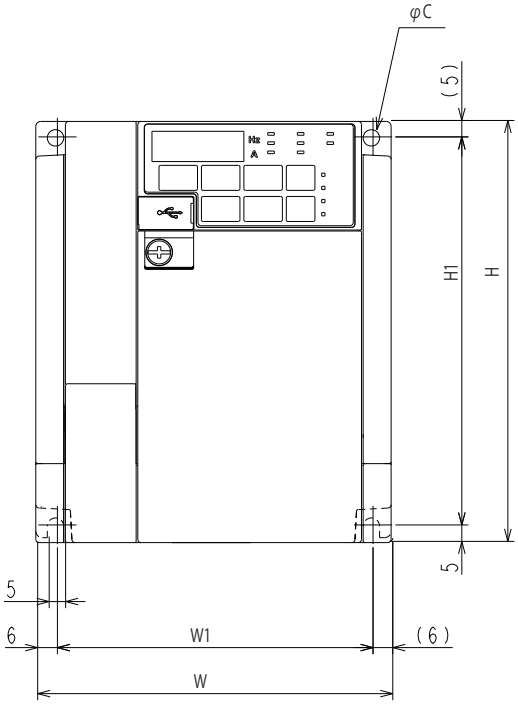

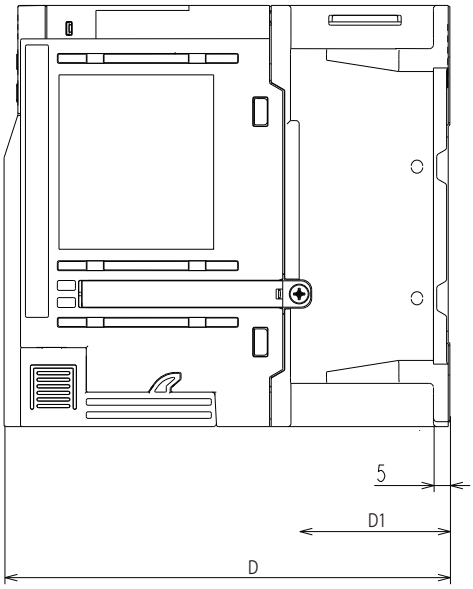

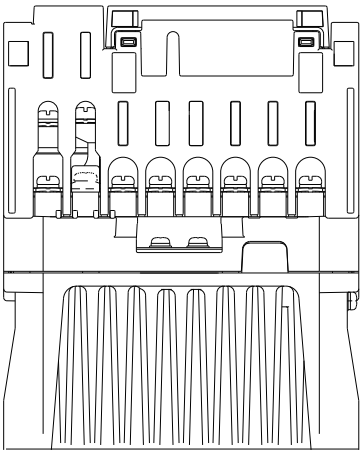

Inverter model	W	W1	H	H1	D	D1	C
FR-E820-0080(1.5K)E FR-E820-0110(2.2K)E FR-E820-0080(1.5K)SCE FR-E820-0110(2.2K)SCE	108	96	128	118	135.5	46	5
FR-E840-0016(0.4K)E FR-E840-0026(0.75K)E FR-E840-0016(0.4K)SCE FR-E840-0026(0.75K)SCE					129.5	40	
FR-E840-0040(1.5K)E FR-E840-0040(1.5K)SCE					135.0	46	
FR-E820S-0050(0.75K)E FR-E820S-0050(0.75K)SCE					135	45.5	
FR-E820S-0080(1.5K)E FR-E820S-0080(1.5K)SCE					161	46	

(Unit: mm)

FR-E820-0175(3.7K)E
FR-E820S-0110(2.2K)E
FR-E820-0175(3.7K)SCE
FR-E820S-0110(2.2K)SCE

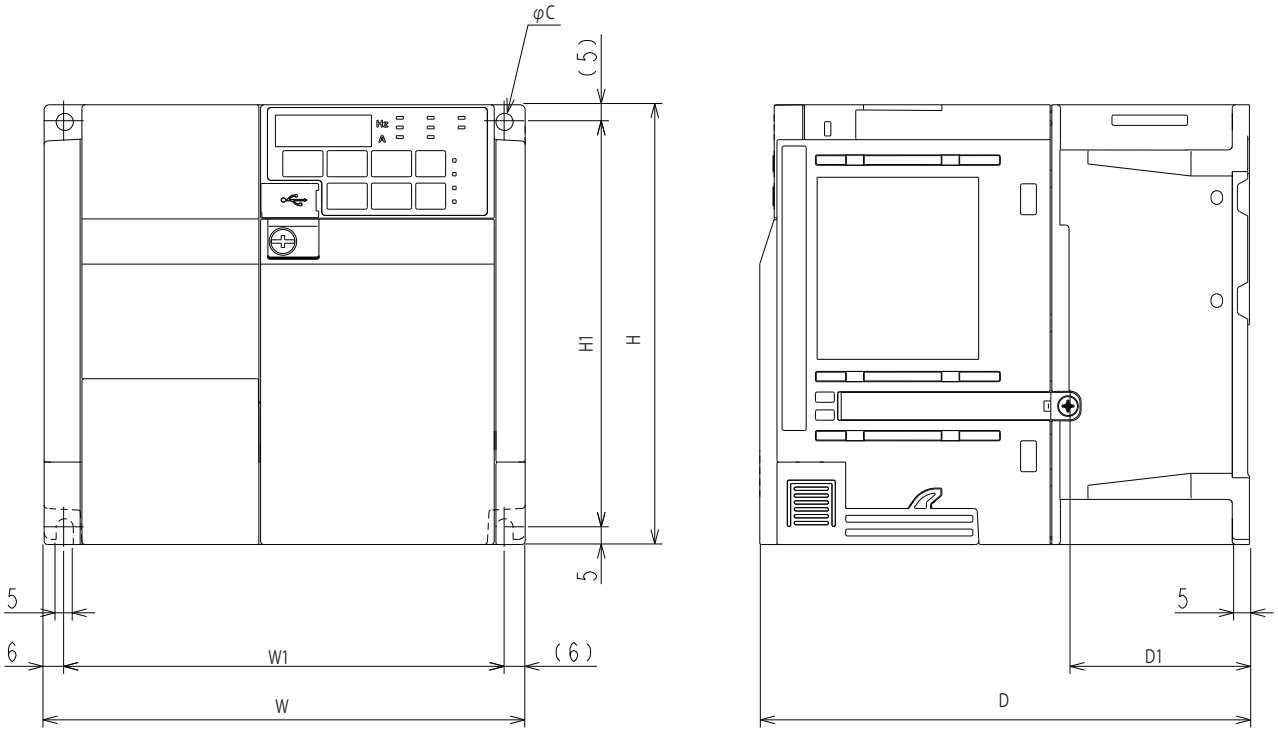

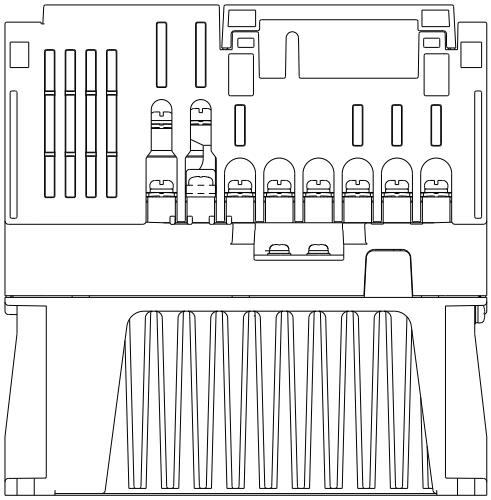

Inverter model	W	W1	H	H1	D	D1	C
FR-E820-0175(3.7K)E FR-E820-0175(3.7K)SCE	140	128	128	118	142.5	52.5	5
FR-E820S-0110(2.2K)E FR-E820S-0110(2.2K)SCE							

(Unit: mm)

FR-E840-0060(2.2K)E, FR-E840-0095(3.7K)SCE

FR-E840-0060(2.2K)SCE, FR-E840-0095(3.7K)SCE

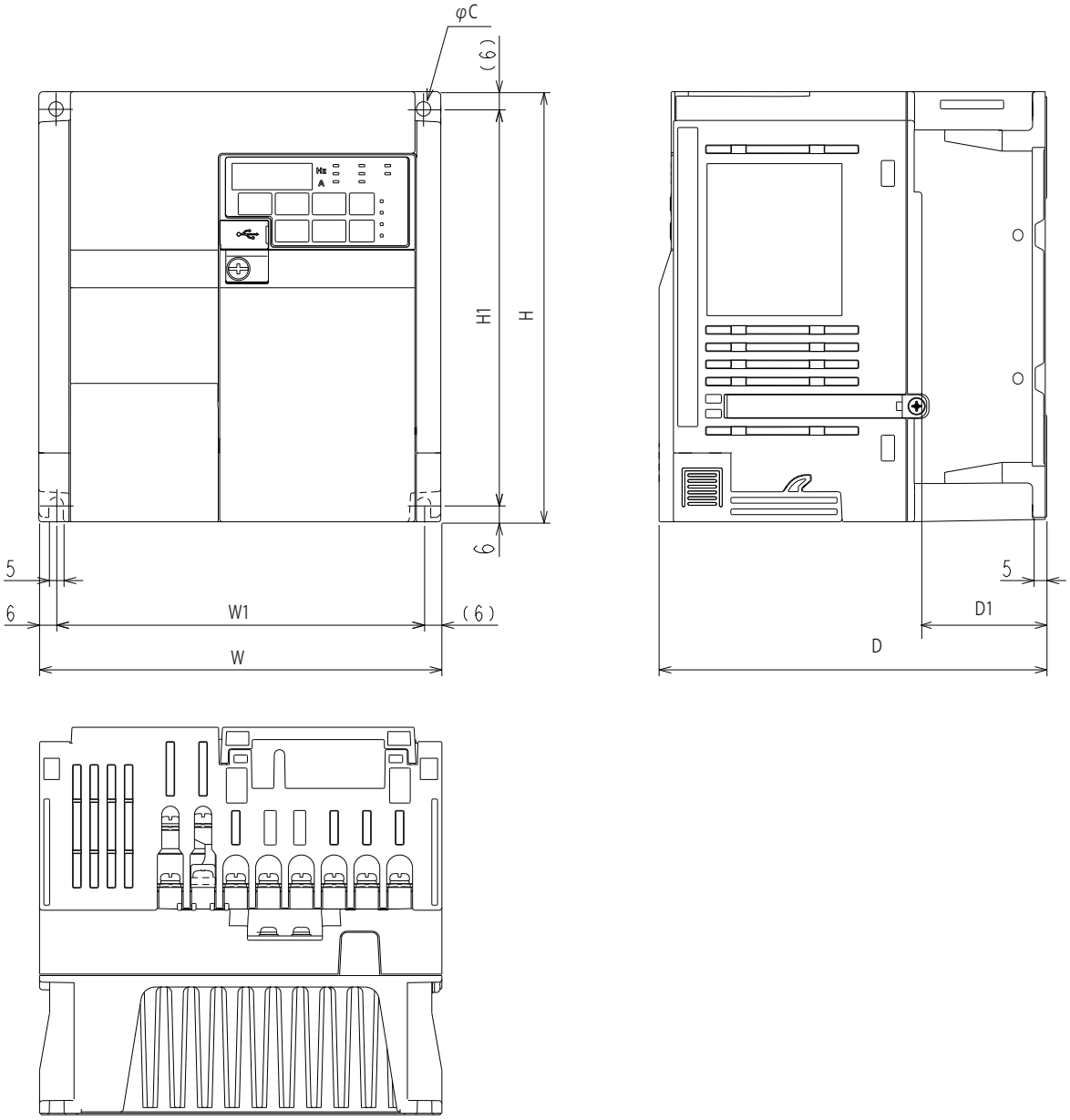

Inverter model	W	W1	H	H1	D	D1	C
FR-E840-0060(2.2K)E FR-E840-0095(3.7K)E FR-E840-0060(2.2K)SCE FR-E840-0095(3.7K)SCE	140	128	150	138	135	43.5	5

(Unit: mm)

FR-E820-0240(5.5K)E, FR-E820-0330(7.5K)E
FR-E820-0240(5.5K)SCE, FR-E820-0330(7.5K)SCE

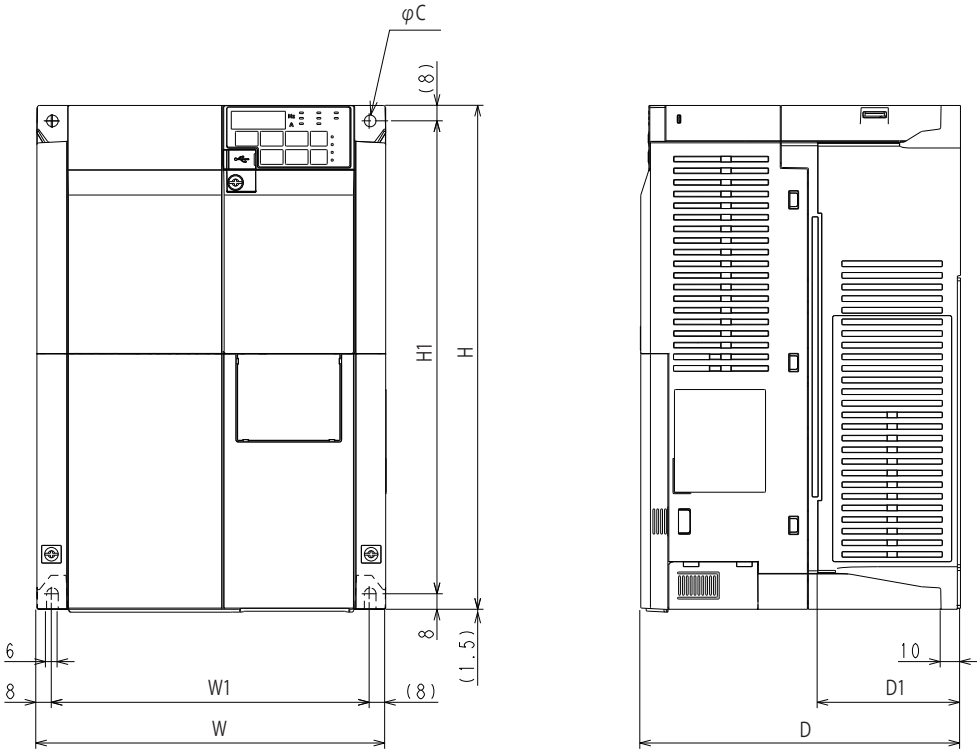

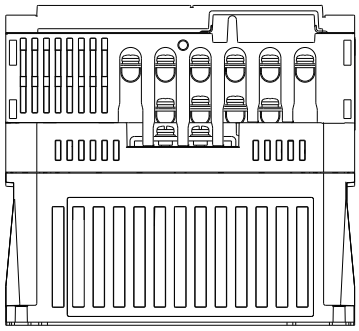

Inverter model	W	W1	H	H1	D	D1	C
FR-E820-0240(5.5K)E FR-E820-0330(7.5K)E FR-E820-0240(5.5K)SCE FR-E820-0330(7.5K)SCE	180	164	260	244	165	71.5	6

(Unit: mm)

FR-E840-0120(5.5K)E, FR-E840-0170(7.5K)E
FR-E840-0120(5.5K)SCE, FR-E840-0170(7.5K)SCE

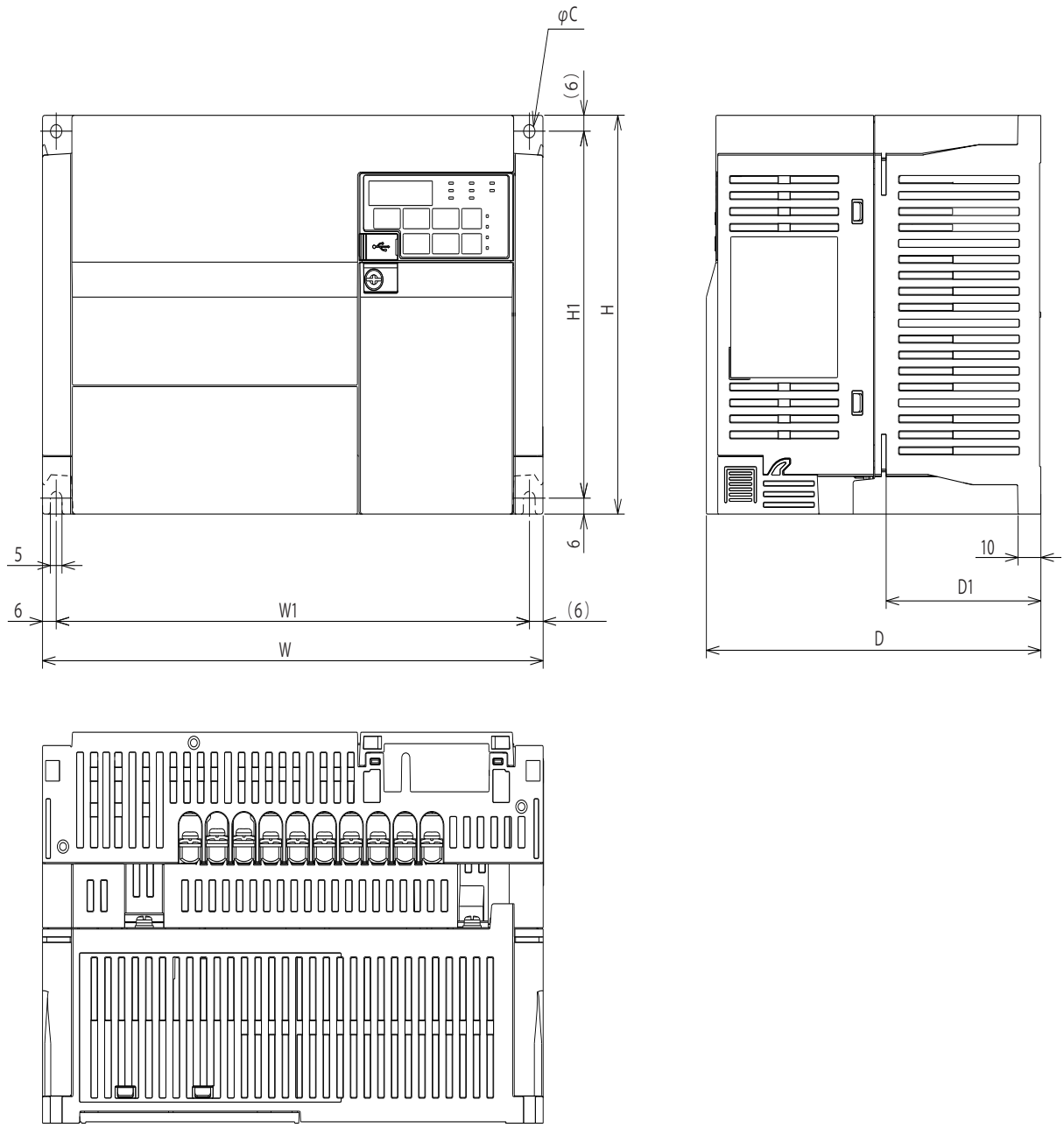

Inverter model	W	W1	H	H1	D	D1	C
FR-E840-0120(5.5K)E FR-E840-0170(7.5K)E FR-E840-0120(5.5K)SCE FR-E840-0170(7.5K)SCE	220	208	150	138	147	68	5

(Unit: mm)

FR-E820-0470(11K)E, FR-E820-0600(15K)E
FR-E840-0230(11K)E, FR-E840-0300(15K)E
FR-E820-0470(11K)SCE, FR-E820-0600(15K)SCE
FR-E840-0230(11K)SCE, FR-E840-0300(15K)SCE

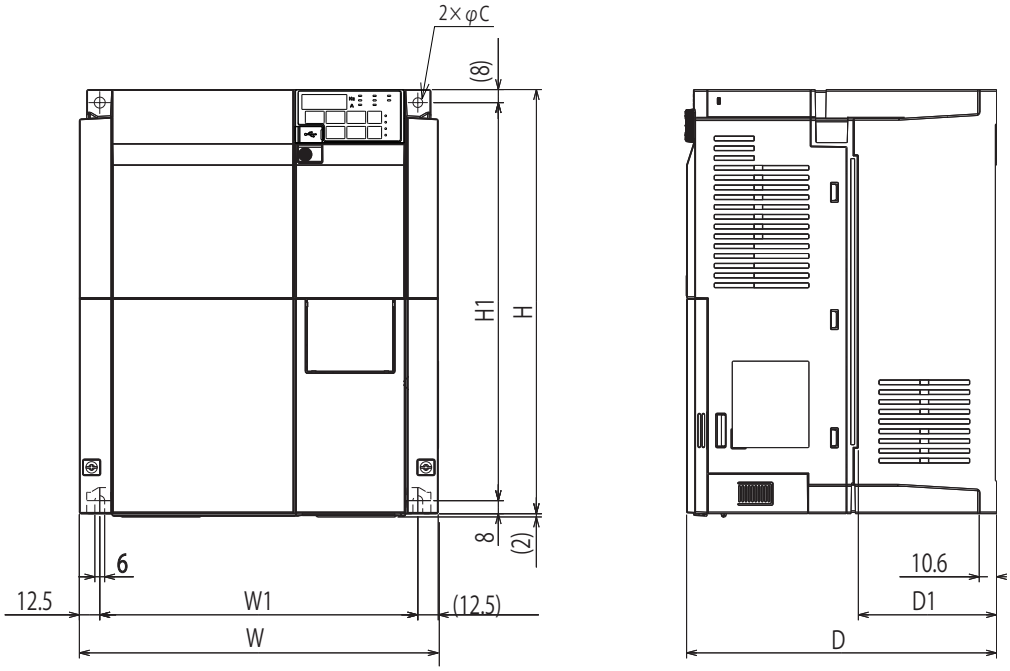

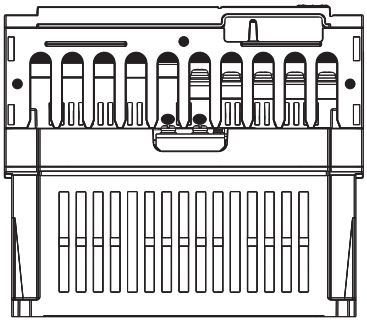

Inverter model	W	W1	H	H1	D	D1	C
FR-E820-0470(11K)E FR-E820-0600(15K)E FR-E840-0230(11K)E FR-E840-0300(15K)E FR-E820-0470(11K)SCE FR-E820-0600(15K)SCE FR-E840-0230(11K)SCE FR-E840-0300(15K)SCE	220	195	260	244	190	84.7	6

(Unit: mm)

FR-E820-0760(18.5K)E, FR-E820-0900(22K)E
FR-E840-0380(18.5K)E, FR-E840-0440(22K)E
FR-E820-0760(18.5K)SCE, FR-E820-0900(22K)SCE
FR-E840-0380(18.5K)SCE, FR-E840-0440(22K)SCE

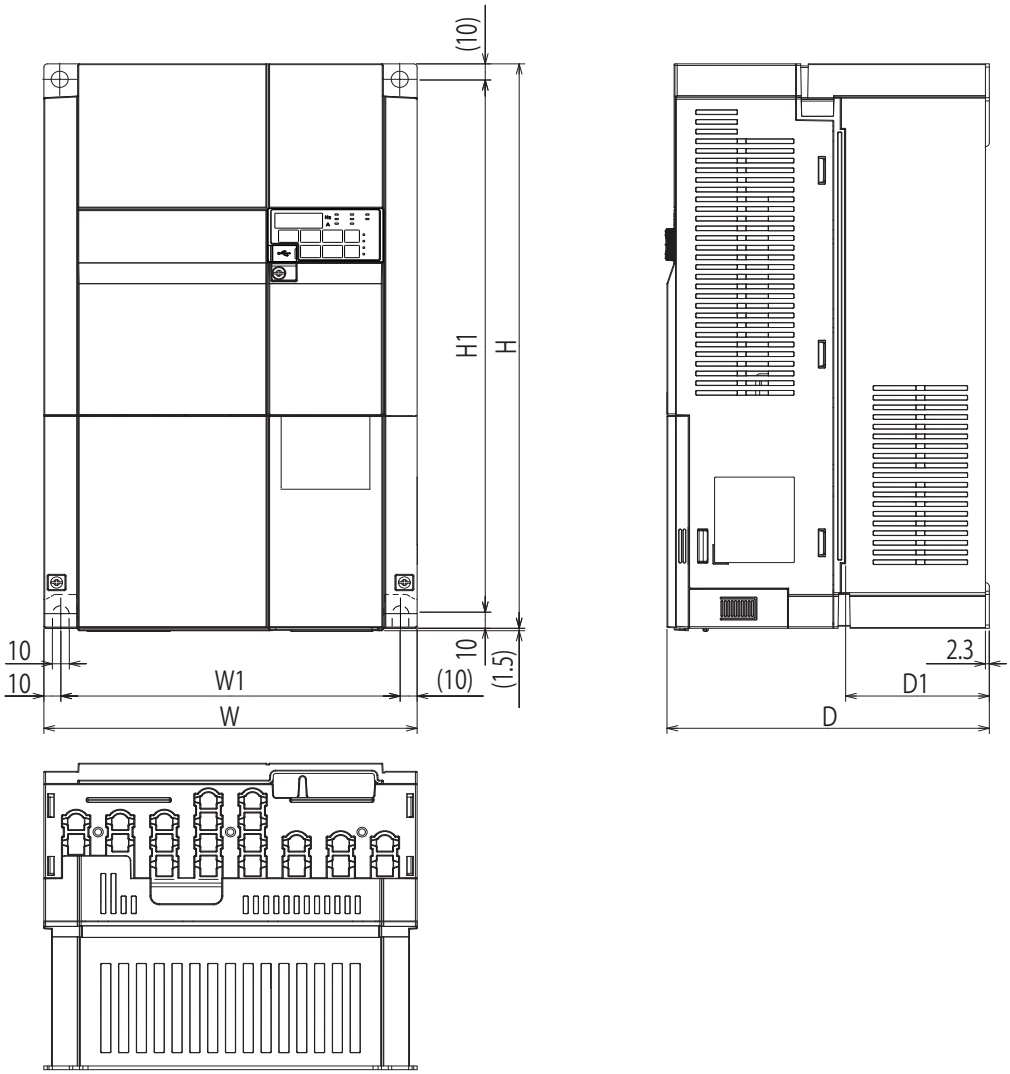

Inverter model	W	W1	H	H1	D	D1	C
FR-E820-0760(18.5K)E FR-E820-0900(22K)E FR-E840-0380(18.5K)E FR-E840-0440(22K)E FR-E820-0760(18.5K)SCE FR-E820-0900(22K)SCE FR-E840-0380(18.5K)SCE FR-E840-0440(22K)SCE	220	200	350	330	190	84.7	10

(Unit: mm)

4.4.3 Dedicated motor outline dimension drawings

◆ Dedicated motor (SF-PR-SC) outline dimension drawings (standard horizontal type)

Frame number: 90L

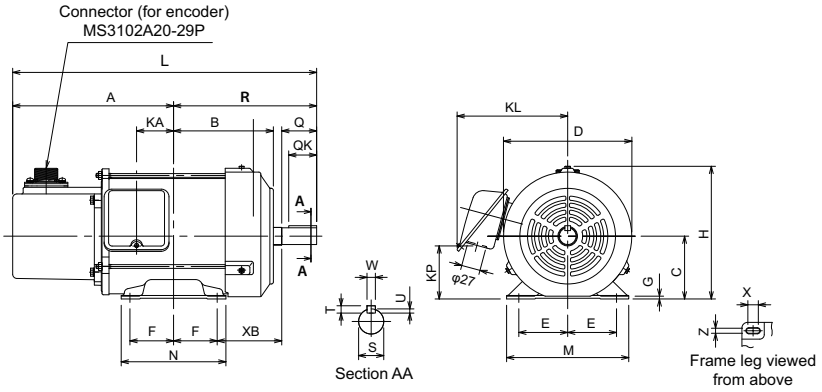

Frame number: 100L, 112M

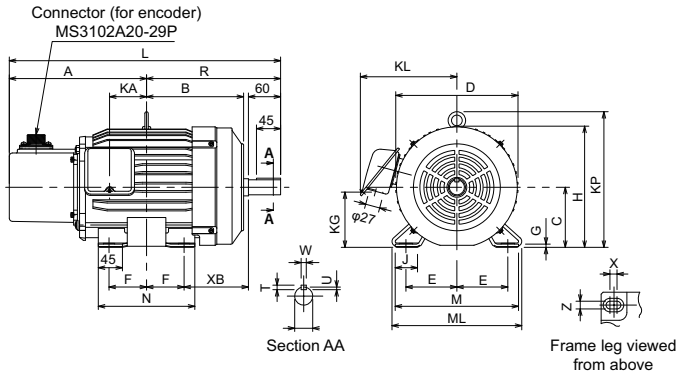

Frame number: 132S, 132M

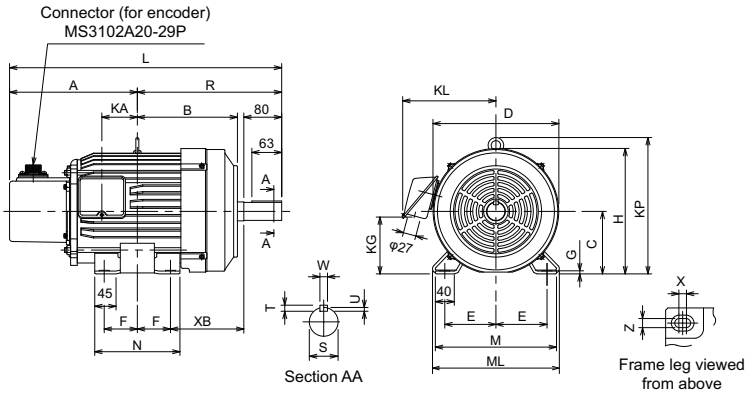

Frame number: 160M, 160L

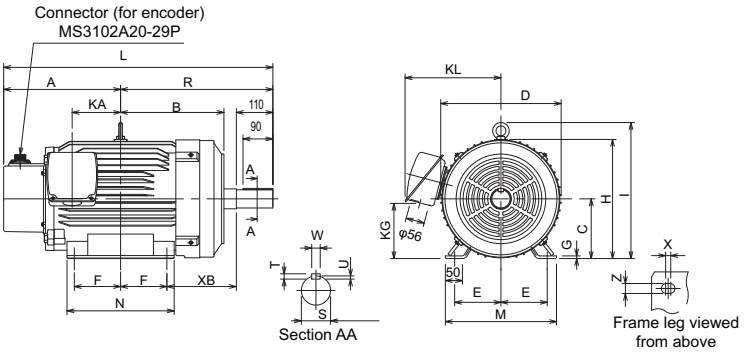

Dimensions table (Unit: mm)

Frame No.	Output (kW)		Motor																						
	4 poles	6 poles	A	B	C	D	E	F	G	H	I	KA	KG	KL (KP)	L	M	ML	N	XB	Q	QK	R	S	T	U	W
90L	1.5	—	230.5	143	90	184	70	62.5	4	191	—	53	76	158	435.5	175	—	150	92.5	50	40	205	24j6	7	4	8
100L	2.2	1.5	267	173	100	207	80	70	6.5	203.5	230	65	88	169	507	300	212	180	110	60	45	240	28j6	7	4	8
112M	3.7	—	256	181	112	228	95	70	6.5	226	253	69	103	180	506	230	242	180	120	60	45	250	28j6	7	4	8
	—	2.2	293	181	112	228	95	70	6.5	226	253	106	103	180	543	230	242	180	120	60	45	250	28j6	7	4	8
132S	5.5	3.7	270	211.5	132	266	108	70	6.5	265	288	75	120	197	575	256	268	180	155	80	63	305	38k6	8	5	10
132M	7.5	5.5	289	230.5	132	266	108	70	6.5	265	288	94	120	197	613	256	268	218	155	80	63	324	38k6	8	5	10
160M	11	7.5	309	252	160	318	127	105	8	316	367	105	142	266	707	310	—	254	183	110	90	398	42k6	8	5	12
160L	15	11	331	274	160	318	127	127	8	316	367	127	142	266	751	310	—	298	183	110	90	420	42k6	8	5	12
180M	18.5, 22	15	333.5	292.5	180	363	139.5	120.5	8	359	410	127	168	289	773.5	335	—	285	209.5	110	90	440	48k6	9	5.5	14
180LD	—	18.5, 22	394.5	311.5	180	406	139.5	139.5	11	381	—	184	429	480	853.5	341	—	323	209.5	110	90	459	55m6	10	6	16

NOTE

- The vertical tolerance for the shaft center height is $^{0}_{-0.5}$.

4

◆ Dedicated motor (SF-V5RU(H)) outline dimension drawings (standard horizontal type)

Frame number: 90L

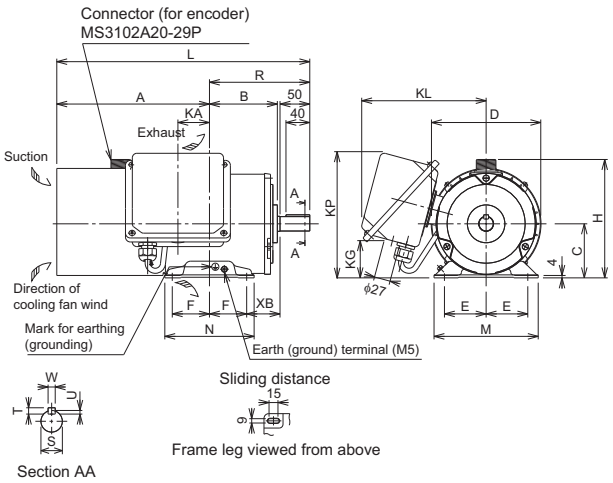

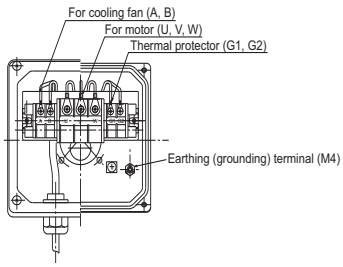

Frame number: 100L, 112M, 132S, 132M

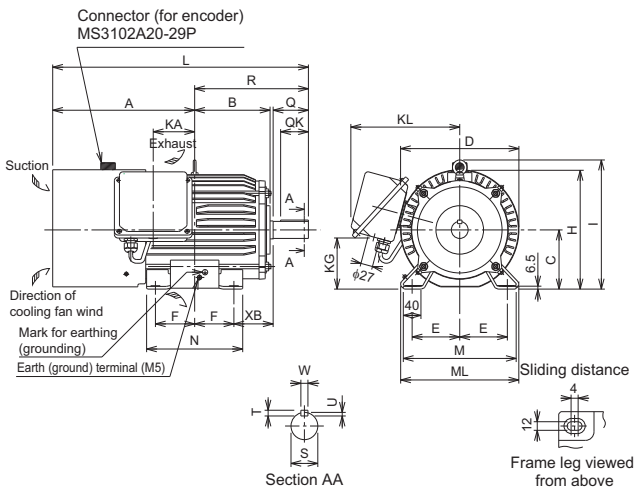

Make sure to earth (ground) the earth (ground) terminal of the flange section as well as the earth terminal in the terminal box.

Dimensions table (Unit: mm)

SF-V5RU[]K	Frame No.	Mass (kg)	Motor																							Terminal screw size		
			A	B	C	D	E	F	H	I	KA	KG	KL (KP)	L	M	ML	N	XB	Q	QK	R	S	T	U	W	U, V, W	A, B, (C)	G1, G2
1	90L	24	256.5	114	90	183.6	70	62.5	198	—	53	65	220 (210)	425	175	—	150	56	—	—	168.5	24j6	7	4	8	M6	M4	M4
2	100L	33	284	128	100	207	80	70	203.5	230	65	78	231	477	200	212	180	63	60	45	193	28j6	7	4	8	M6	M4	M4
3	112M	41	278	135	112	228	95	70	226	253	69	93	242	478	230	242	180	70	60	45	200	28j6	7	4	8	M6	M4	M4
5	132S	52	303	152	132	266	108	70	265	288	75	117	256	542	256	268	180	89	80	63	239	38k6	8	5	10	M6	M4	M4
7	132M	62	322	171	132	266	108	89	265	288	94	117	256	580	256	268	218	89	80	63	258	38k6	8	5	10	M6	M4	M4

Frame number: 160M, 160L, 180M

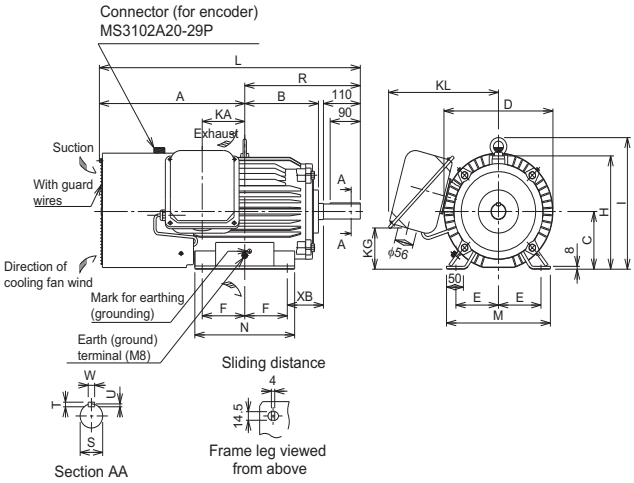

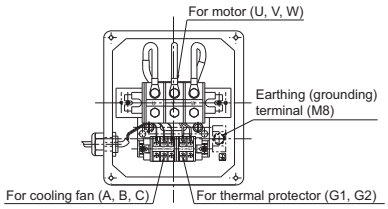

Make sure to earth (ground) the earth (ground) terminal of the flange section as well as the earth terminal in the terminal box.

Dimensions table (Unit: mm)

SF-V5RU[]K	Frame No.	Mass (kg)	Motor																							Terminal screw size		
			A	B	C	D	E	F	H	I	KA	KG	KL (KP)	L	M	ML	N	XB	Q	QK	R	S	T	U	W	U, V, W	A, B, (C)	G1, G2
11	160M	99	412	198	160	318	127	105	316	367	105	115	330	735	310	—	254	108	—	—	323	42k6	8	5	12	M8	M4	M4
15	160L	113	434	220	160	318	127	127	316	367	127	115	330	779	310	—	298	108	—	—	345	42k6	8	5	12	M8	M4	M4
18	180M	138	438.5	225.5	180	363	139.5	120.5	359	410	127	139	352	790	335	—	285	121	—	—	351.5	48k6	9	5.5	14	M8	M4	M4

NOTE

- Install the motor with a frame number 180 or larger on the floor and use it with the shaft horizontal.
- Leave an enough clearance between the fan suction port and wall to ensure adequate cooling. Check that a fan blows air from the opposite load side to the load side.
- The vertical tolerance for the shaft center height is $^{0}_{-0.5}$.
- The 400 V class motor has "H" in its model name.

◆ Dedicated motor (SF-V5RU(H)) outline dimension drawings (standard horizontal type with brake)

Frame number: 90L

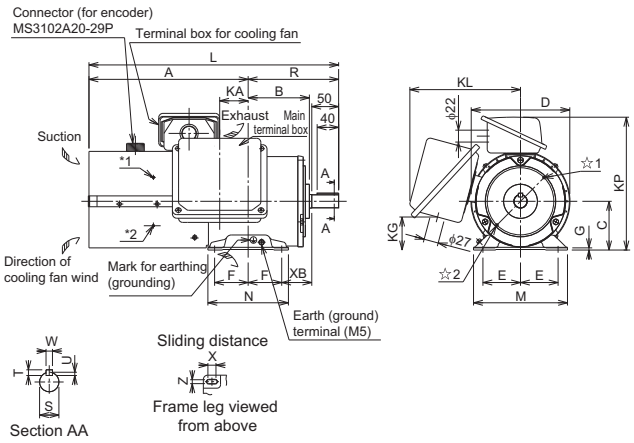

Frame number: 100L, 112M, 132S, 132M

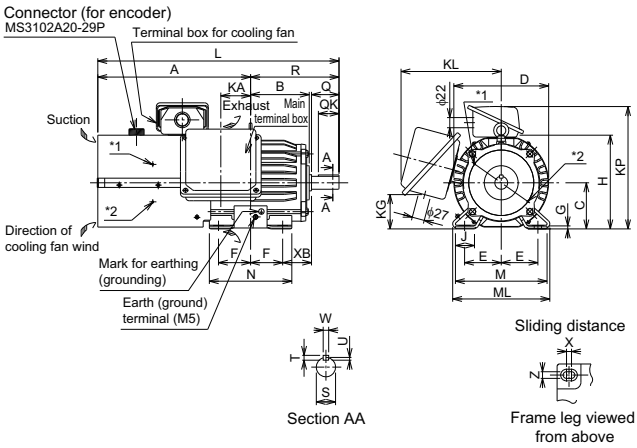

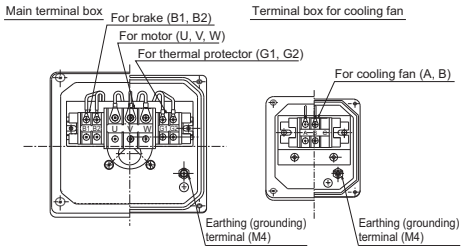

* indicates an inserting position of a bolt with hex head holes for manual opening.
Make sure to earth (ground) the earth (ground) terminal of the frame installation feet as well as the earth (ground) terminal in the terminal box.

Dimensions table (Unit: mm)

SF-V5RU□KB	Frame No.	Mass (kg)	Motor																						Shaft end							Terminal screw size			
			A	B	C	D	E	F	G	H	I	J	KA	KD	KG	KL	KP	L	M	ML	N	X	XB	Z	Q	QK	R	S	T	U	W	U, V, W	A, B, (C)	G1, G2	B1, B2
1	90L	29	296.5	114	90	183.6	70	62.5	4	—	—	—	53	27	65	220	245	465	175	—	150	15	56	9	50	40	168.5	24j6	7	4	8	M6	M4	M4	M4
2	100L	46	333.5	128	100	207	80	70	6.5	—	—	40	65	27	78	231	265	526.5	200	212	180	4	63	12	60	45	193	28j6	7	4	8	M6	M4	M4	M4
3	112M	53	355	135	112	228	95	70	6.5	—	—	40	69	27	93	242	290	555	230	242	180	4	70	12	60	45	200	28j6	7	4	8	M6	M4	M4	M4
5	132S	70	416	152	132	266	108	70	6.5	—	—	40	75	27	117	256	329	655	256	268	180	4	89	12	80	63	239	38k6	8	5	10	M6	M4	M4	M4
7	132M	80	435	171	132	266	108	89	6.5	—	—	40	94	27	117	256	329	693	256	268	218	4	89	12	80	63	258	38k6	8	5	10	M6	M4	M4	M4

Frame number: 160M, 160L, 180M

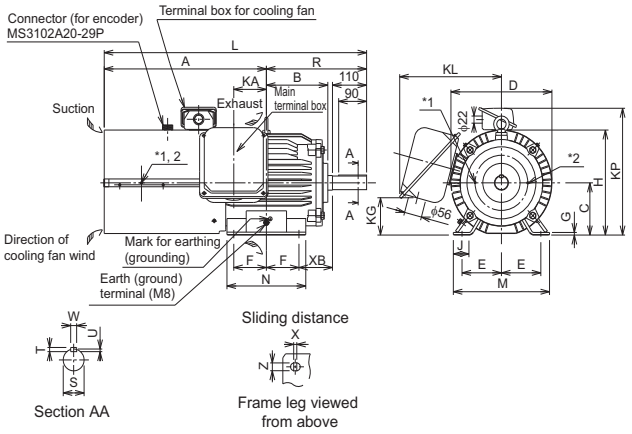

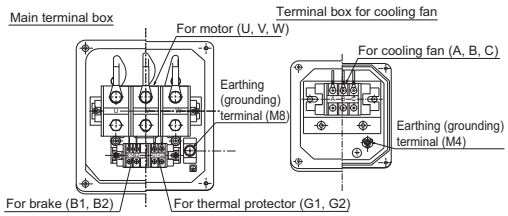

* indicates an inserting position of a bolt with hex head holes for manual opening.
Make sure to earth (ground) the earth (ground) terminal of the frame installation feet as well as the earth (ground) terminal in the terminal box.

Dimensions table (Unit: mm)

SF-V5RU []KB	Frame No.	Mass (kg)	Motor																					Shaft end							Terminal screw size			
			A	B	C	D	E	F	G	H	I	J	KA	KD	KG	KL	KP	L	M	ML	N	X	XB	Z	Q	QK	R	S	T	U	W	U, V, W	A, B, (C)	G1, G2	B1, B2
11	160M	140	522.5	198	160	318	127	105	8	—	—	50	105	56	115	330	391	845.5	310	—	254	4	108	14.5	110	90	323	42k6	8	5	12	M8	M4	M4	M4
15	160L	155	544.5	220	160	318	127	127	8	—	—	50	127	56	115	330	391	889.5	310	—	298	4	108	14.5	110	90	345	42k6	8	5	12	M8	M4	M4	M4
18	180M	185	568.5	225.5	180	363	139.5	120.5	8	—	—	50	127	56	139	352	428	920	335	—	285	4	121	14.5	110	90	351.5	48k6	9	5.5	14	M8	M4	M4	M4

NOTE

- Install the motor on the floor and use it with the shaft horizontal.
- Leave an enough clearance between the fan suction port and wall to ensure adequate cooling. Check that a fan blows air from the opposite load side to the load side.
- The vertical tolerance for the shaft center height is $^{0}_{-0.5}$.
- The 400 V class motor has "H" in its model name.
- Since a brake power device is a stand-alone, install it inside the enclosure. (This device should be arranged by the customer. Refer to the FR-E800 catalog.)

◆ Dedicated motor (SF-V5RU(H)) outline dimension drawings (flange type)

Frame number: 90L

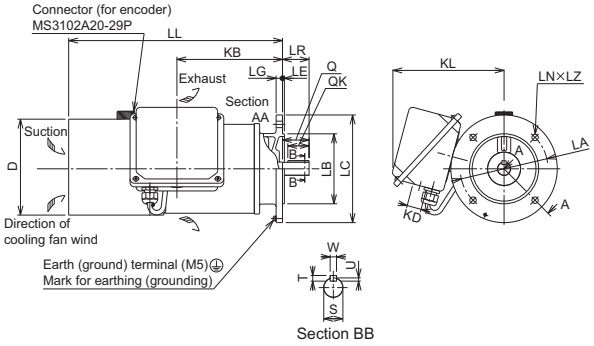

Frame number: 100L, 112M, 132S, 132M

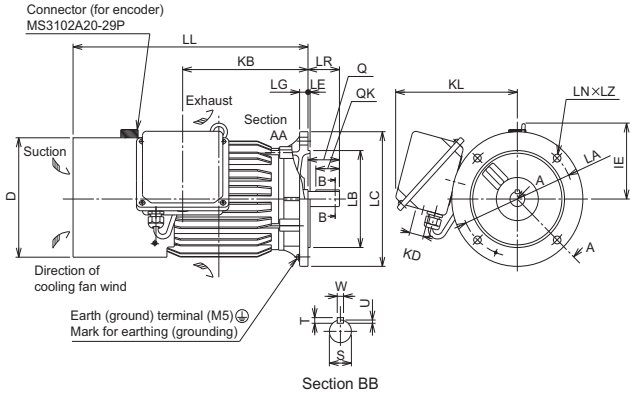

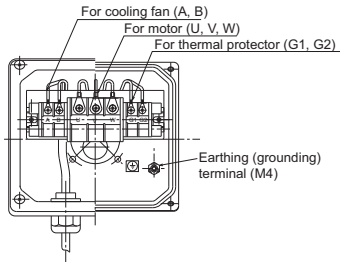

Make sure to earth (ground) the earth (ground) terminal of the flange section as well as the earth (ground) terminal in the terminal box.

Dimensions table (Unit: mm)

SF-V5RUF[]K	Flange No.	Frame No.	Mass (kg)	Motor													Shaft end							Terminal screw size		
				D	IE	KB	KD	KL	LA	LB	LC	LE	LG	LL	LN	LZ	LR	Q	QK	S	T	U	W	U, V, W	A, B, (C)	G1, G2
1	FF165	90L	26.5	183.6	—	198.5	27	220	165	130j6	200	3.5	12	402	4	12	50	50	40	24j6	7	4	8	M6	M4	M4
2	FF215	100L	37	207	130	213	27	231	215	180j6	250	4	16	432	4	14.5	60	60	45	28j6	7	4	8	M6	M4	M4
3	FF215	112M	46	228	141	239	27	242	215	180j6	250	4	16	448	4	14.5	60	60	45	28j6	7	4	8	M6	M4	M4
5	FF265	132S	65	266	156	256	27	256	265	230j6	300	4	20	484	4	14.5	80	80	63	38k6	8	5	10	M6	M4	M4
7	FF265	132M	70	266	156	294	27	256	265	230j6	300	4	20	522	4	14.5	80	80	63	38k6	8	5	10	M6	M4	M4

Frame number: 160M, 160L, 180M

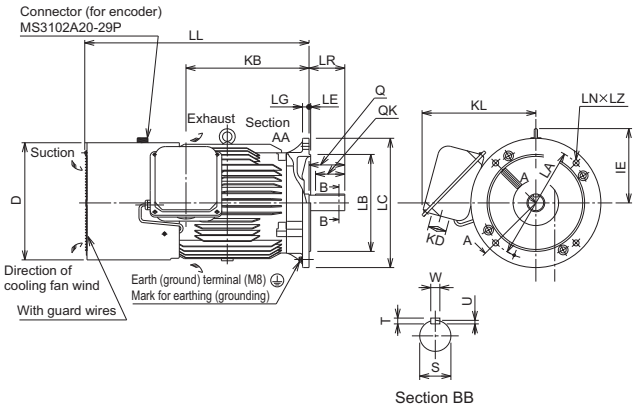

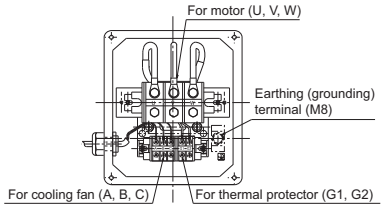

Make sure to earth (ground) the earth (ground) terminal of the flange section as well as the earth (ground) terminal in the terminal box.

Dimensions table (Unit: mm)

SF-V5RUF□K	Flange No.	Frame No.	Mass (kg)	Motor													Shaft end							Terminal screw size		
				D	IE	KB	KD	KL	LA	LB	LC	LE	LG	LL	LN	LZ	LR	Q	QK	S	T	U	W	U, V, W	A, B, (C)	G1, G2
11	FF300	160M	110	318	207	318	56	330	300	250j6	350	5	20	625	4	18.5	110	110	90	42k6	8	5	12	M8	M4	M4
15	FF300	160L	125	318	207	362	56	330	300	250j6	350	5	20	669	4	18.5	110	110	90	42k6	8	5	12	M8	M4	M4
18	FF350	180M	160	363	230	378.5	56	352	350	300j6	400	5	20	690	4	18.5	110	110	90	48k6	9	5.5	14	M8	M4	M4

NOTE

- The motor with a frame number 180 cannot be installed on the ceiling (with the shaft facing up). For use with the shaft facing down, the protection rating of the cooling fan is IP20.
- Leave an enough clearance between the fan suction port and wall to ensure adequate cooling. Check that a fan blows air from the opposite load side to the load side.
- The 400 V class motor has "H" in its model name.

◆ Dedicated PM motor (MM-GKR) outline dimension drawings

MM-GKR13

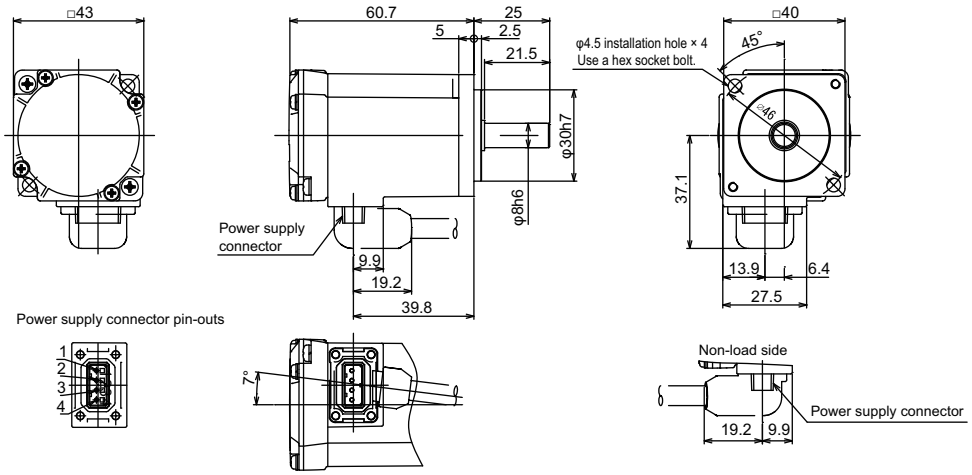

MM-GKR23, 43

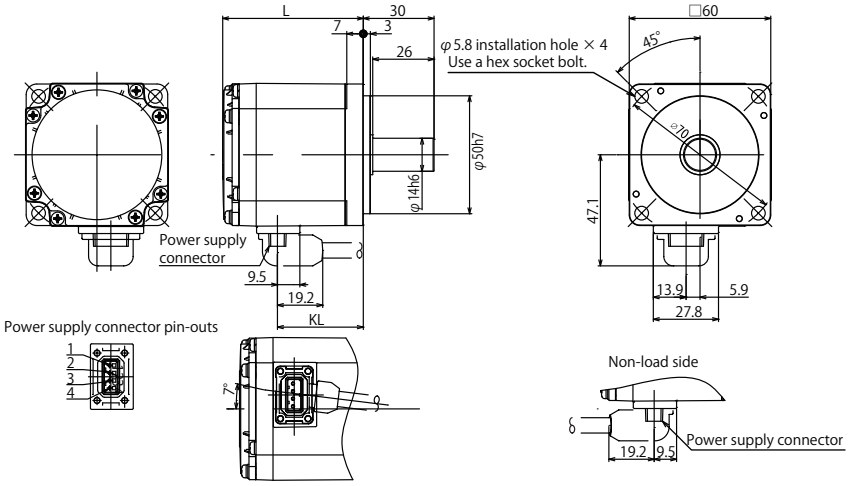

MM-GKR73

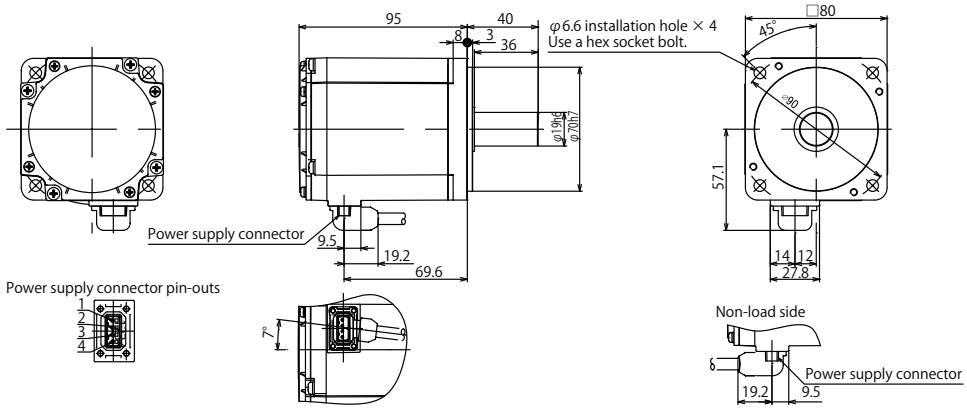

Dimensions table (Unit: mm)

MM-GKR[]	L	KL
23	59.6	36.4
43	81.3	58.1

Power supply connector pin-out

Pin number	Signal name
1	⏚ (PE)
2	U
3	V
4	W

NOTE

- Unless otherwise specified, use general dimensional tolerances.
- Use a friction coupling for connection with a load.
- The servo motor with oil seal (MM-GKR_J) has outline dimensions different from those of the standard motor. For details, contact your sales representative.

■ Customized shaft end specifications

D-cut shaft...0.1kW

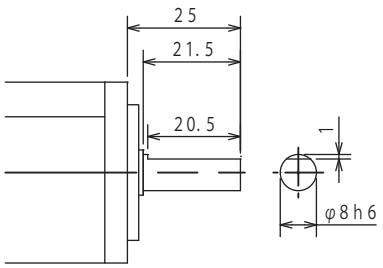

(Unit: mm)

Key shaft (with key)…0.2kW, 0.4kW, 0.75kW

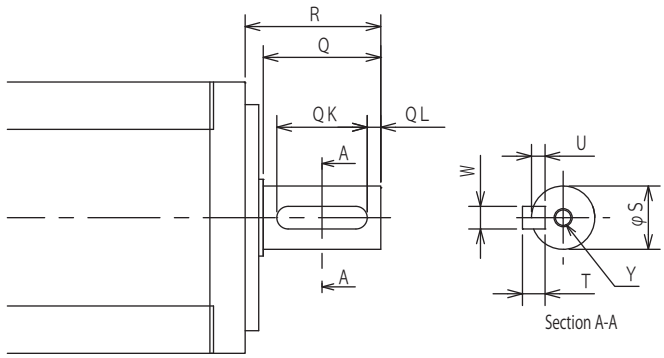

Dimensions table (Unit: mm)

MM-GKR[]K	T	S	R	Q	W	QK	QL	U	Y
23, 43	5	14h6	30	26	5	20	3	3	M4 screw, depth: 15
73	6	19h6	40	36	6	25	5	3.5	M5 screw, depth: 20

NOTE

- Not applicable for high-duty operation. Such an operation may result in a fracture of the shaft due to rattling of the key.
- Double round end key

◆ Dedicated PM motor (MM-GKR) (with electromagnetic brake) outline dimension drawings

MM-GKR23B

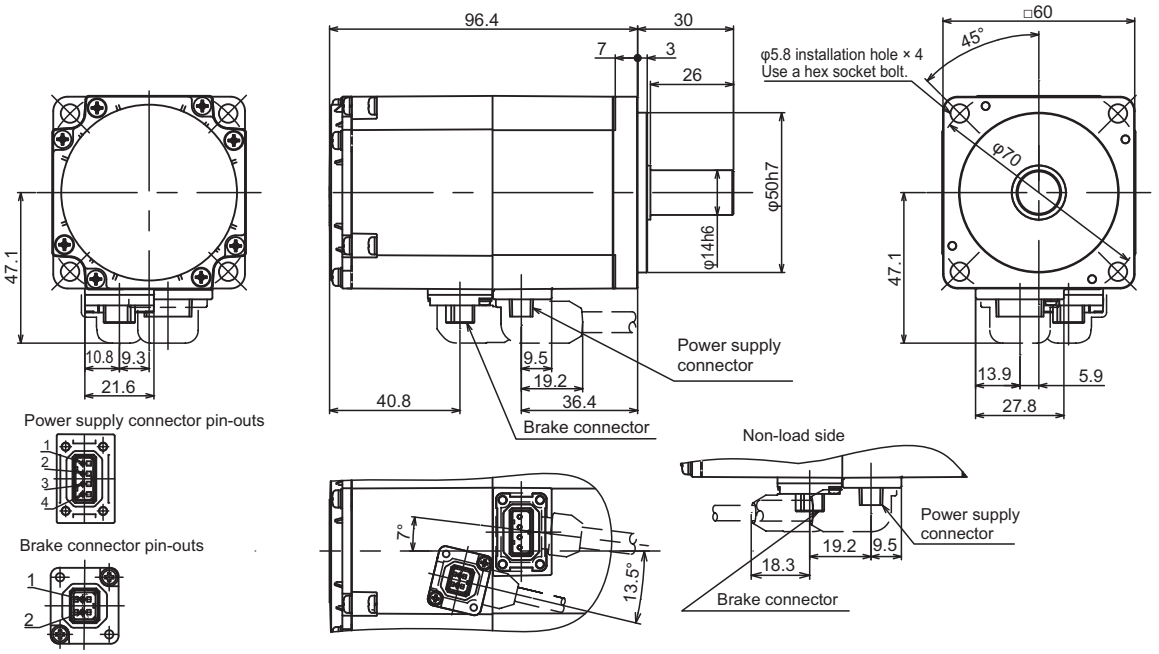

MM-GKR43B

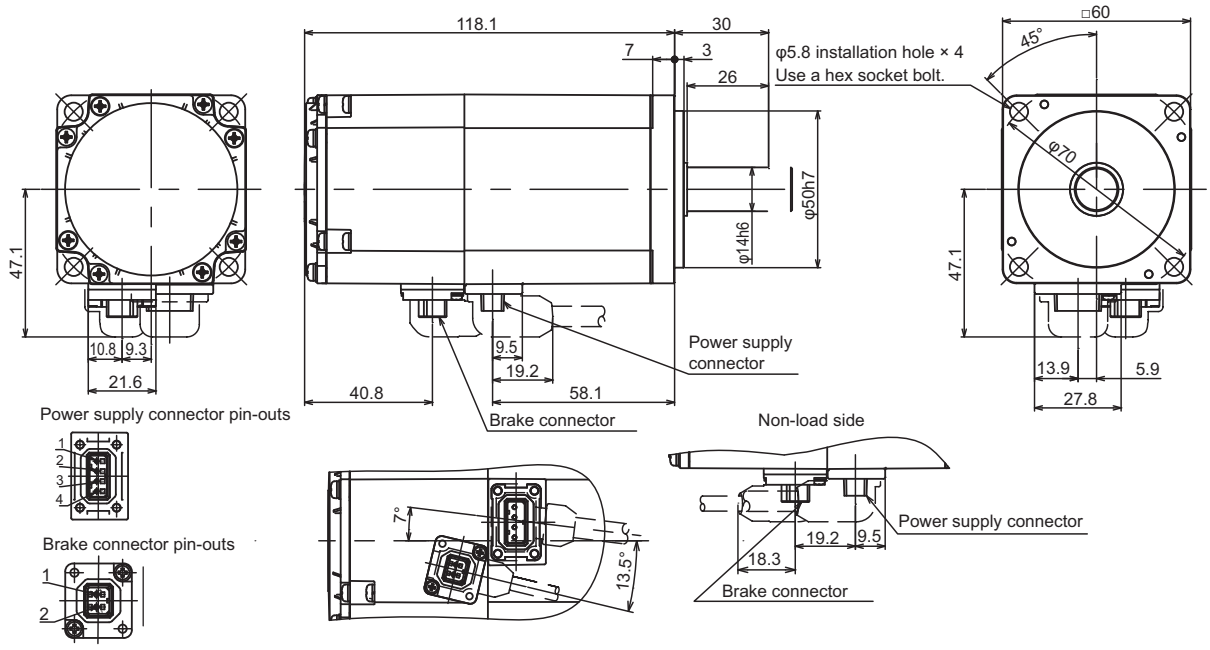

(Unit: mm)

MM-GKR73B

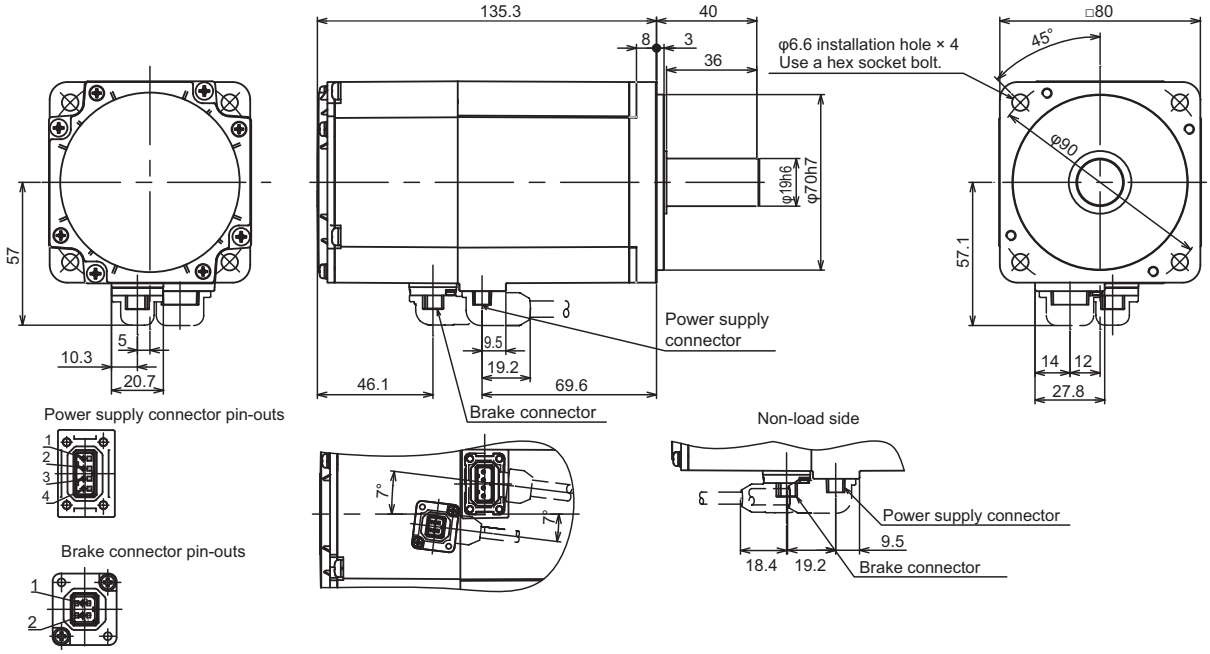

Power supply connector pin-out

Pin number	Signal name
1	Earth (ground)
2	U
3	V
4	W

Brake connector pin-outs

Pin number	Signal name
1	B1
2	B2

NOTE

- Unless otherwise specified, use general dimensional tolerances.
- Use a friction coupling for connection with a load.
- The MM-GKR[][]B(J) (electromagnetic brake equipped model) has a straight shaft as standard. The models with a key shaft are also available as dedicated models. For details, contact your sales representative.

◆ Dedicated PM motor (MM-GKR) (with reduction gear) outline dimension drawings

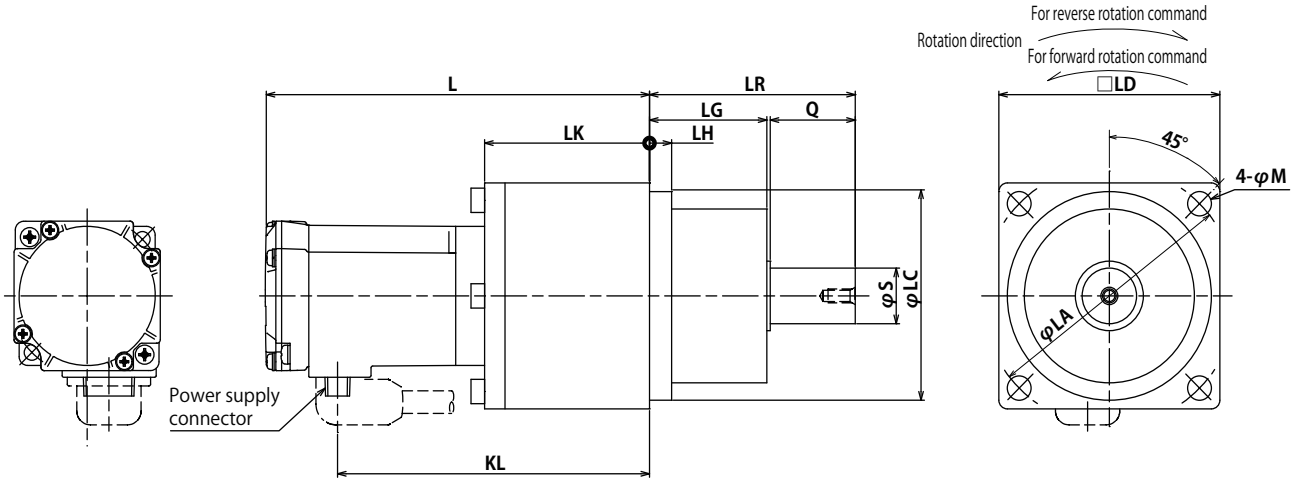

Power supply connector pin-outs

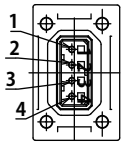

Dimensions table (Unit: mm)

MM-GKR[]G0	Reduction ratio (actual reduction ratio)	L	LA	LC	LD	S	LH	LK	KL	LG	Q	LR	M
13	1/5 (42/221)	112.7	75	60h7	65	16h6	6.5	48.5	91.7	34.5	25	60.5	7
	1/12 (9/104)												
	1/20 (12/247)												
	1/20 (24/713)	127.7	100	82h7	90	25h6	11.5	59	106.8	37.5	35	73.5	9
23	1/5 (44/217)	126.6							103.4				
	1/12 (48/589)												
	1/20 (32/651)												
	1/30 (24/713)												
43	1/5 (15/77)	148.3							125.1				
	1/12 (9/110)												
	1/20 (9/189)	157.3	115	95h7	100	32h6	8	71	134.1	39	50	90	
	1/30 (12/351)												
73	1/5 (19/95)	176.8						13.5	151.4				
	1/12 (40/475)												
	1/20 (14/285)	179.8	140	115h7	120	40h6	12	73	154.4	45	60	106	14
	1/30 (25/722)												

Power supply connector pin-out

Pin number	Signal name
1	⏚ (PE)
2	U
3	V
4	W

NOTE

- Unless otherwise specified, use general dimensional tolerances.
- Use a friction coupling for connection with a load.
- The MM-GKR[][]G0 (reduction gear equipped model for general industrial machines) has a straight shaft as standard. The models with a key shaft are also available as dedicated models. For details, contact your sales representative.

◆ Dedicated PM motor (EM-A) outline dimension drawings

■ EM-AMF

5.5kW

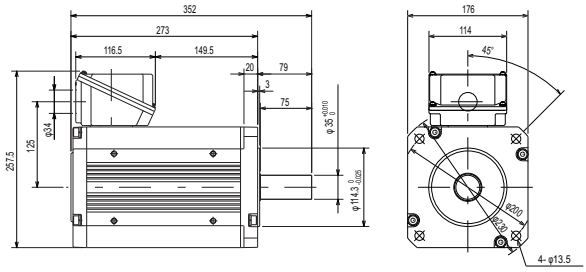

7.5kW

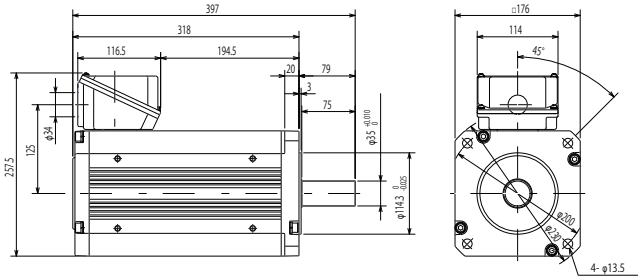

(Unit: mm)

■ EM-AMFB

5.5kW

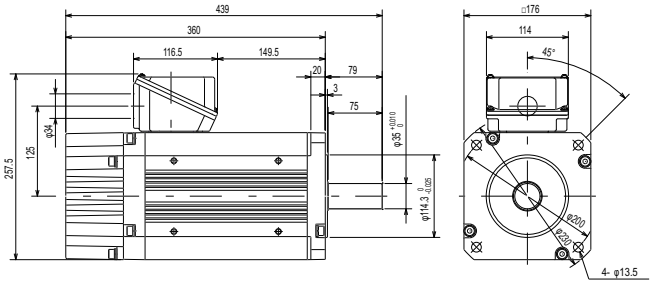

7.5kW

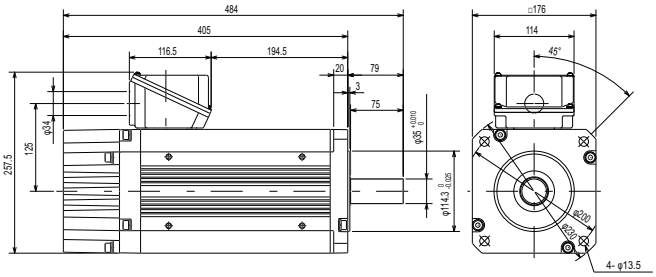

(Unit: mm)

CHAPTER 5 Appendix

5.1 How to check specification changes 166

5 Appendix

5.1 How to check specification changes

Check the SERIAL number indicated on the inverter rating plate or packaging. For how to read the SERIAL number, refer to page 14.

5.1.1 Details of specification changes

◆ Number of connectable units on the CC-Link IE Field Network Basic

Number of connectable units	SERIAL
Master: 1 Slave: up to 16 stations (16 stations × 1 group)	□□ 204 ○○○○○○ or earlier
Master: 1 Slave: up to 16 stations (16 stations × 4 groups)	□□ 205 ○○○○○○ or later

◆ Functions available for the inverters manufactured in May 2020 or later

Item	Details
Mitsubishi Electric geared motor	GM-[]
Plug-in option	FR-A8ND E kit, FR-A8NP E-kit
Stand-alone option	Parameter unit (FR-PU07), LCD operation panel (FR-LU08)
Added parameters	**Pr.1499, P.E107 (Pr.75)**
Changed parameter setting range	• Setting value "13" added for **Pr.52, Pr.54, Pr.158, Pr.774 to Pr.776, Pr.992, Pr.1027 to Pr.1034** • Setting values "1800 and 1803" added for **Pr.71 and Pr.450** (for 200/400 V class only) • Setting values "10000 to 10003, and 10014 to 10017" added for **Pr.75** (for the safety communication model only)

◆ Functions available for the inverters manufactured in August 2020 or later

Item	Details
Mitsubishi Electric Vector control dedicated motor (SF-V5RU (1500 r/min series))	The SF-V5RU 1.5 to 5.5 kW motors can be driven by the FR-E820-0110(2.2K) to 0330(7.5K) inverters. The SF-V5RUH 1.5 to 5.5 kW motors can be driven by the FR-E840-0060(2.2K) to 0170(7.5K) inverters.
Mitsubishi Electric high-performance energy-saving motor with encoder	SF-PR-SC
Mitsubishi Electric inverter-driven geared motor for encoder feedback control	GM-DZ, GM-DP
Plug-in option	FR-A8AP E kit
EtherNet/IP communication specifications	Access to the parameters, monitor data, and terminals is available. Inverter Configuration Object (64h) • Inverter Parameters (12288 to 16383) • Monitor Data (16384 to 20479) • Inverter Control Parameters (20480 to 24575)
PROFINET communication specifications	Access to the parameters, monitor data, and terminals is available. • Inverter Parameters (12288 to 16383) • Monitor Data (16384 to 20479) • Inverter Control Parameters (20480 to 24575)
Added parameters	**Pr.284, Pr.359, Pr.367, Pr.368, Pr.369, Pr.376, Pr.422, Pr.552, Pr.600 to Pr.604, Pr.607, Pr.608, Pr.690, Pr.692 to Pr.696, Pr.802, Pr.823, Pr.828, Pr.833, Pr.840 to Pr.848, Pr.854, Pr.873, Pr.877 to Pr.881, P.A107 (Pr.285)**
Changed parameter setting range	• Setting value "8888" added for **Pr.11** • Setting values "19 and 35" added for **Pr.52, Pr.774 to Pr.776, Pr.992, and Pr.1027 to Pr.1034** • Setting values "30 and 33" added for **Pr.71 and Pr.450** • Setting values "13, 23, 42, 43, and 74" added for **Pr.178 to Pr.189** • Setting values "30 to 33, and 130 to 133" added for **Pr.190 to Pr.196** • Setting values "30 to 33" added for **Pr.320 to Pr.322** • Setting values "0 to 2, and 9" added for **Pr.800** • Setting value "2" added for **Pr.850** • Setting value "6" added for **Pr.858**
Added faults	• Signal loss detection (E.ECT) • Brake sequence fault (E.MB1 to E.MB3)

◆ Functions available for the inverters manufactured in January 2021 or later

Item	Details	Related manuals
Position control (Vector control)	Position control (Vector control) is supported for induction motors. • **Pr.420, Pr.421, Pr.423, Pr.425 to Pr.427, Pr.430, Pr.446, Pr.464 to Pr.478, Pr.510, Pr.511, Pr.538, Pr.698, Pr.1222, Pr.1223, Pr.1225 to Pr.1227, Pr.1229 to Pr.1231, Pr.1233 to Pr.1235, Pr.1237 to Pr.1239, Pr.1241 to Pr.1243, Pr.1245 to Pr.1247, Pr.1249, Pr.1282, Pr.1283, Pr.1285, Pr.1286, Pr.1289, Pr.1290, Pr.1292 to Pr.1297**	Connection/ Function/ Communication/ Maintenance
	Position control is available. • Setting values "3 to 5" added for **Pr.800**	
	Signals for position control can be assigned to I/O terminals. • Setting values "76, and 87 to 89" added for **Pr.178 to Pr.189** • Setting values "24, 36, 38, 56, 60 to 63, 84, 124, 136, 138, 156, 160 to 163, and 184" added for **Pr.190 to Pr.196 and Pr.313 to Pr.319** • Setting values "24, 36, 38, 56, 60 to 63, and 84" added for **Pr.320 to Pr.322**	
	Monitoring during position control is available (multifunction monitor). • Setting values "26 to 31, and 65" added for **Pr.52, Pr.774 to Pr.776, and Pr.992** • Setting value "65" added for **Pr.54 and Pr.158** • Setting values "65, 222 to 227, and 229" added for **Pr.1027 to Pr.1034**	
	The following warnings are added: LP (Stroke limit warning), HP1 (Home position return setting error), and HP2 (Home position return uncompleted)	
	The following faults are added: E.OD (Excessive position fault) and E.OA (acceleration error).	
CC-Link IE TSN communication specifications	User defined cyclic communication is supported. • Setting values "38 and 138" of **Pr.544** are available for remote registers.	Function/ Communication
EtherNet/IP communication specifications	User defined cyclic communication is supported. • "Configurable" is added for the connections of Class 1 communication (I/O Message communication) (Instances 100 and 150).	Communication
PROFINET communication specifications	User defined cyclic communication is supported. • Telegram 102 is added for Process Data (Cyclic Data Exchange).	Communication
MODBUS/TCP communication specifications	CiA402 drive profile (24642 to 24644, 24646, 24648, 24649, and 26623) is added for MODBUS registers.	Communication
PTC thermistor	Motor overheat protection by the motor's built-in PTC thermistor is supported. • **Pr.561 and Pr.1016** are added. • Setting value "64" of **Pr.52, Pr.774 to Pr.776, Pr.992, Pr.1027 to Pr.1034** is available (multifunction monitor). • E.PTC (PTC thermistor operation) is added.	Connection/ Function/ Maintenance
Backup/restore function	Inverter parameters and the data used in the PLC function of inverter can be backed up and restored. • RD (Backup in progress) and WR (Restoration in progress) indications are added.	Communication/ Maintenance
Increased magnetic excitation deceleration	Added functions • **Pr.660 and Pr.662** are added.	Function
Optimum excitation control	The control can be enabled under Advanced magnetic flux vector control.	Function
PLC function	The structured text (ST) language is supported, and jump commands are supported.	PLC Function Programming Manual
Capacity	200 V class: 11K to 22K are added. 400 V class: 11K to 22K are added.	Connection/ Function/ Communication/ Maintenance
Parameters	**Pr.375** added User Defined Cyclic Communication Input/Output Mapping parameters (**Pr.1318 to Pr.1343**) added	Function/ Communication

◆ Functions available for the inverters manufactured in May 2021 or later

Item	Details	Related manuals
PM motor (MM-GKR 0.4kW and 0.75kW, and EM-A 5.5kW and 7.5kW)	Applied motor setting • Setting values "540 and 1140" (200 V class) added for **Pr.71** and **Pr.450**	Connection/ Function/ Communication/ Maintenance
	Parameter initial setting • Setting values "3024, 3044, 3124, and 3144" (200 V class) added for **Pr.998**	
	Position control (Vector control) is supported for PM motors (MM-GKR and EM-A). Control mode setting • Setting values "13 and 14" added for **Pr.451 and Pr.800**	
Orientation control	Added parameters • **Pr.350 to Pr.358, Pr.361 to Pr.366, Pr.393, Pr.396 to Pr.399**	Function/ Communication/ Maintenance
	Setting values • Setting value "22" added for **Pr.52** • Setting value "22" added for **Pr.178 to Pr.189** • Setting values "27, 28, 127, and 128" added for **Pr.190 to Pr.196** • Setting values "27, 28, 127, and 128" added for **Pr.313 to Pr.319** • Setting values "27 and 28" added for **Pr.320 to Pr.322** • Setting value "22" added for **Pr.774 to Pr.776** • Setting value "22" added for **Pr.992** • Setting value "22" added for **Pr.1027 to Pr.1034**	
EtherCAT communication specifications	The E800-EPC models are added.	Connection/ Function/ Communication/ Maintenance
	Added parameters • **Pr.1305**	
Emergency drive (except for the E800-SCE inverters)	Added parameters • **Pr.136, Pr.139, Pr.514, Pr.515, Pr.523, Pr.524, and Pr.1013**	Connection/ Function/ Maintenance
	Setting values • Setting value "68" added for **Pr.52** • Setting value "84" added for **Pr.178 to Pr.189** • Setting values "18, 19, 65, 66, 165, and 166" added for **Pr.190 to Pr.196** • Setting values "18, 19, 65, 66, 165, and 166" added for **Pr.313 to Pr.319** • Setting values "18, 19, 65, and 66" added for **Pr.320 to Pr.322** • Setting value "68" added for **Pr.774 to Pr.776** • Setting value "68" added for **Pr.992** • Setting value "68" added for **Pr.1027 to Pr.1034**	
	ED (Emergency drive) warning added	
Ethernet communication specifications	Simple positioning using CiA402 drive profile Added parameters • **Pr.1220** added Setting values • Setting values added for **Pr.1320 to Pr.1329** [E800-(SC)EPA][E800-(SC)EPB] "24672, 24689, 24698, 24703, 24705, 24707, 24708, 24719, 24721, and 24728 to 24730" [E800-EPC] "12288 to 13787, 20488, 20489, 24642, 24646, 24648 to 24650, 24672, 24677 to 24680, 24689, 24698, 24702, 24703, 24705, 24707 to 24709, 24719, 24721, 24728 to 24730, 24831, and 9999" • Setting values added for **Pr.1330 to Pr.1343** [E800-(SC)EPA][E800-(SC)EPB] "20992, 24639, 24643, 24644, 24673 to 24676, 24692, 24695, 24820, 24826, 24828, and 25858" [E800-EPC] "12288 to 13787, 16384 to 16483, 20488, 20489, 20981 to 20990, 20992, 24639, 24643, 24644, 24673 to 24676, 24692, 24695, 24820, 24826, 24828, 25858, and 9999"	Communication
	User defined cyclic communication specifications Added parameters • **Pr.1389 to Pr.1398**	
	Ethernet relay operation at reset selection Added parameter • **Pr.1386**	
Parameters	Parameters added for the second functions • **Pr.1298** and **Pr.1299**	Function

◆ Functions available for the inverters manufactured in September 2021 or later

Item	Details	Related manuals
BACnet MS/TP communication specifications	Added parameters • **Pr.726 and Pr.727**	Function/ Communication
	Setting values • Setting values "81, 82, and 84 to 86" added for **Pr.52, Pr.774 to Pr.776, and Pr.1027 to Pr.1034** • Setting values "81 to 86" added for **Pr.992** • Setting value "85" added for **Pr.54** • Setting value "86" added for **Pr.158** • Setting values "82 and 182" added for **Pr.190 and Pr.191** • Setting value "2" added for **Pr.549**	

◆ Functions available for the inverters manufactured in December 2021 or later

Item	Details	Related manuals
Cumulative pulse monitoring	Added parameters • **Pr.635, Pr.636, and Pr.638**	Function
	Setting values • Setting values "71 and 72" added for **Pr.52, Pr.774 to Pr.776, Pr.992, and Pr.1027 to Pr.1034** • Setting value "52" added for **Pr.178 to Pr.189**	
24 V external power supply operation	Plug-in option FR-E8DS E kit is available.	Function/ Maintenance/ FR-E8DS E Kit Instruction Manual
	Setting values • Setting values "68 and 168" added for **Pr.190 to Pr.196, and Pr.313 to Pr.319** • Setting value "68" added for **Pr.320 to Pr.322**	
	Operation panel indication "EV" (24 V external power supply operation) is added.	
Internal storage device status indication	Added parameters • **Pr.890**	Function/ Maintenance
	E.PE6 (Internal storage device fault) fault added	
MM-GKR motor capacity	0.1 kW and 0.2 kW are added.	Function/ Connection
Environmental impact diagnosis function	Cor (Corrosion warning) warning added	Maintenance

Warranty

When using this product, make sure to understand the warranty described below.

1. **Warranty period and coverage**

   We will repair any failure or defect (hereinafter referred to as "failure") in our FA equipment (hereinafter referred to as the "Product") arisen during warranty period at no charge due to causes for which we are responsible through the distributor from which you purchased the Product or our service provider. However, we will charge the actual cost of dispatching our engineer for an on-site repair work on request by customer in Japan or overseas countries. We are not responsible for any on-site readjustment and/or trial run that may be required after a defective unit are repaired or replaced.

   [Term]

   The term of warranty for Product is twelve months after your purchase or delivery of the Product to a place designated by you or eighteen months from the date of manufacture whichever comes first ("Warranty Period"). Warranty period for repaired Product cannot exceed beyond the original warranty period before any repair work.

   [Limitations]

   (1) You are requested to conduct an initial failure diagnosis by yourself, as a general rule. It can also be carried out by us or our service company upon your request and the actual cost will be charged.
   However, it will not be charged if we are responsible for the cause of the failure.

   (2) This limited warranty applies only when the condition, method, environment, etc. of use are in compliance with the terms and conditions and instructions that are set forth in the instruction manual and user manual for the Product and the caution label affixed to the Product.

   (3) Even during the term of warranty, the repair cost will be charged on you in the following cases;
   - a failure caused by your improper storing or handling, carelessness or negligence, etc., and a failure caused by your hardware or software problem
   - a failure caused by any alteration, etc. to the Product made on your side without our approval
   - a failure which may be regarded as avoidable, if your equipment in which the Product is incorporated is equipped with a safety device required by applicable laws and has any function or structure considered to be indispensable according to a common sense in the industry
   - a failure which may be regarded as avoidable if consumable parts designated in the instruction manual, etc. are duly maintained and replaced
   - any replacement of consumable parts (condenser, cooling fan, etc.)
   - a failure caused by external factors such as inevitable accidents, including without limitation fire and abnormal fluctuation of voltage, and acts of God, including without limitation earthquake, lightning and natural disasters
   - a failure caused by using the emergency drive function
   - a failure generated by an unforeseeable cause with a scientific technology that was not available at the time of the shipment of the Product from our company
   - any other failures which we are not responsible for or which you acknowledge we are not responsible for

2. **Term of warranty after the stop of production**

   (1) We may accept the repair at charge for another seven (7) years after the production of the product is discontinued. The announcement of the stop of production for each model can be seen in our Sales and Service, etc.

   (2) Please note that the Product (including its spare parts) cannot be ordered after its stop of production.

3. **Service in overseas**

   Our regional FA Center in overseas countries will accept the repair work of the Product; however, the terms and conditions of the repair work may differ depending on each FA Center. Please ask your local FA center for details.

4. **Exclusion of loss in opportunity and secondary loss from warranty liability**

   Regardless of the gratis warranty term, Mitsubishi Electric shall not be liable for compensation to:

   (1) Damages caused by any cause found not to be the responsibility of Mitsubishi Electric.

   (2) Loss in opportunity, lost profits incurred to the user by Failures of Mitsubishi Electric products.

   (3) Special damages and secondary damages whether foreseeable or not, compensation for accidents, and compensation for damages to products other than Mitsubishi Electric products.

   (4) Replacement by the user, maintenance of on-site equipment, start-up test run and other tasks.

5. **Change of Product specifications**

   Specifications listed in our catalogs, manuals or technical documents may be changed without notice.

6. **Application and use of the Product**

   (1) For the use of our product, its applications should be those that may not result in a serious damage even if any failure or malfunction occurs in product, and a backup or fail-safe function should operate on an external system to product when any failure or malfunction occurs.

   (2) Our product is designed and manufactured as a general purpose product for use at general industries.
   Therefore, applications substantially influential on the public interest for such as atomic power plants and other power plants of electric power companies, and also which require a special quality assurance system, including applications for railway companies and government or public offices are not recommended, and we assume no responsibility for any failure caused by these applications when used.
   In addition, applications which may be substantially influential to human lives or properties for such as airlines, medical treatments, railway service, incineration and fuel systems, man-operated material handling equipment, entertainment machines, safety machines, etc. are not recommended, and we assume no responsibility for any failure caused by these applications when used.
   We will review the acceptability of the abovementioned applications, if you agree not to require a specific quality for a specific application. Please contact us for consultation.

Revisions

*The manual number is given on the bottom left of the back cover.

Revision date	*Manual number	Revision
Dec. 2019	IB(NA)-0600865ENG-A	First edition
Apr. 2020	IB(NA)-0600865ENG-B	Added • FR-E820S-0008(0.1K) to 0110(2.2K)(E)(SCE) • FR-E800-SCE (safety communication model)
Jun. 2020	IB(NA)-0600865ENG-C	Added • Vector control
Nov. 2020	IB(NA)-0600865ENG-D	Added • FR-E820-0470(11K) to 0900(22K)(E)(SCE), FR-E840-0230(11K) to 0440(22K)(E)(SCE) • Position control (Vector control)
Jan. 2021	IB(NA)-0600865ENG-E	Edited • Models listed on the front cover
Apr. 2021	IB(NA)-0600865ENG-F	Added • MM-GKR and EM-A motors • Orientation control and emergency drive • EtherCAT (FR-E800-EPC)
Oct. 2021	IB(NA)-0600865ENG-G	Added • MM-GKR13 and MM-GKR23

Model	FR-E800 Instruction Manual (Connection)
Model code	1A2-P89

MITSUBISHI ELECTRIC CORPORATION

HEAD OFFICE: TOKYO BUILDING 2-7-3, MARUNOUCHI, CHIYODA-KU, TOKYO 100-8310, JAPAN

IB(NA)-0600865ENG-G(2110)MEE Printed in Japan

Specifications subject to change without notice.