MITSUBISHI ELECTRIC

700 series

INVERTER
Plug-in option
FR-A7NP
INSTRUCTION MANUAL

PROFIBUS-DP communication function

PRE-OPERATION INSTRUCTIONS 1

INSTALLATION 2

WIRING 3

INVERTER SETTING 4

FUNCTIONS 5

PROFIBUS DEVICE DATA 6

PPO TYPE SUPPORT 7

PPO TYPE NON SUPPORT 8

TROUBLESHOOTING 9

Thank you for choosing this Mitsubishi Inverter plug-in option.
This instruction manual gives handling information and precautions for use of this equipment. Incorrect handling might cause an unexpected fault. Before using the equipment, please read this manual carefully to use the equipment to its optimum.
Please forward this manual to the end user.

This section is specifically about safety matters

Do not attempt to install, operate, maintain or inspect this product until you have read through this instruction manual and appended documents carefully and can use the equipment correctly. Do not use this product until you have a full knowledge of the equipment, safety information and instructions.
In this instruction manual, the safety instruction levels are classified into "WARNING" and "CAUTION".

⚠ WARNING	Assumes that incorrect handling may cause hazardous conditions, resulting in death or severe injury.
⚠ CAUTION	Assumes that incorrect handling may cause hazardous conditions, resulting in medium or slight injury, or may cause physical damage only.

Note that even the ⚠ CAUTION level may lead to a serious consequence according to conditions. Please follow the instructions of both levels because they are important to personnel safety.

SAFETY INSTRUCTIONS

1. Electric Shock Prevention

⚠ WARNING

- While power is on or when the inverter is running, do not open the front cover. You may get an electric shock.
- Do not run the inverter with the front cover or wiring cover removed. Otherwise, you may access the exposed high-voltage terminals and charging part and get an electric shock.
- If power is off, do not remove the front cover except for wiring or periodic inspection. You may access the charged inverter circuits and get an electric shock.
- Before starting wiring or inspection, check to make sure that the indication of the inverter operation panel is off, wait for at least 10 minutes after the power supply has been switched off, and check that there are no residual voltage using a tester or the like. The capacitor is charged with high voltage for some time after power off and it is dangerous.
- Any person who is involved in the wiring or inspection of this equipment should be fully competent to do the work.
- Always install the plug-in option before wiring. Otherwise, you may get an electric shock or be injured.
- Do not touch the plug-in option with wet hands. Otherwise you may get an electric shock.
- Do not subject the cables to scratches, excessive stress, heavy loads or pinching. Otherwise you may get an electric shock.

2. Injury Prevention

⚠ CAUTION

- Apply only the voltage specified in the instruction manual to each terminal. Otherwise, burst, damage, etc. may occur.
- Ensure that the cables are connected to the correct terminals. Otherwise, burst, damage, etc. may occur.
- Always make sure that polarity is correct to prevent damage, etc. Otherwise, burst, damage may occur.
- While power is on or for some time after power-off, do not touch the inverter as it is hot and you may get burnt.

3. Additional Instructions

Also note the following points to prevent an accidental failure, injury, electric shock, etc.

1) Transportation and mounting

⚠ CAUTION

- Do not install or operate the plug-in option if it is damaged or has parts missing.
- Do not stand or rest heavy objects on the product.
- Check that the mounting orientation is correct.
- Prevent other conductive bodies such as screws and metal fragments or other flammable substance such as oil from entering the inverter.

2) Trial run

⚠ CAUTION

- Before starting operation, confirm and adjust the parameters. A failure to do so may cause some machines to make unexpected motions.

3) Usage

⚠ WARNING

- Do not modify the equipment.
- Do not perform parts removal which is not instructed in this manual. Doing so may lead to fault or damage of the inverter.

⚠ CAUTION

- When parameter clear or all parameter clear is performed, reset the required parameters before starting operations. Each parameter returns to the initial value.
- For prevention of damage due to static electricity, touch nearby metal before touching this product to eliminate static electricity from your body.

4) Maintenance, inspection and parts replacement

⚠ CAUTION

- Do not test the equipment with a megger (measure insulation resistance).

5) Disposal

⚠ CAUTION

- Treat as industrial waste.

6) General instruction

All illustrations given in this manual may have been drawn with covers or safety guards removed to provide in-depth description. Before starting operation of the product, always return the covers and guards into original positions as specified and operate the equipment in accordance with the manual.

— CONTENTS —

1 PRE-OPERATION INSTRUCTIONS 1

1.1 Inverter Type **1**
1.2 Unpacking and Product Confirmation **2**
1.2.1 Packing confirmation 3
1.2.2 Parts 4
1.3 Node Address Setting **5**
1.4 Specifications **6**
1.4.1 Inverter option specifications 6
1.4.2 Communication specifications 6

2 INSTALLATION 7

2.1 Pre-Installation Instructions **7**
2.2 Installation of the Communication Option LED Display Cover **7**
2.3 Installation Procedure **8**

3 WIRING 10

3.1 Terminal Block **10**
3.2 Wiring **11**

4 INVERTER SETTING 15

4.1 Parameter List **15**
4.2 Operation Mode Setting **16**
4.2.1 Operation mode indication 16
4.2.2 Operation mode switching and communication startup mode (Pr. 79, Pr. 340) 17
4.3 Operation and Speed Command Source (Pr. 338, Pr. 339, Pr. 550) **20**

4.3.1 Communication EEPROM write selection (Pr. 342) 24
4.4 Operation at Communication Error Occurrence 25
4.4.1 Operation selection at communication error occurrence (Pr. 500 to Pr. 502) 25
4.4.2 Alarm and measures 29
4.5 Inverter Reset 31

5 FUNCTIONS 33

5.1 Output from the Inverter to the Network 33
5.2 Input to the Inverter from the Network 34

6 PROFIBUS DEVICE DATA 35

6.1 Device Data (GSD file) 35
6.2 Slave User Parameter 39

7 PPO TYPE SUPPORT SPECIFICATION 40

7.1 Profibus Profiles 40
7.2 ID Definitions 41
7.3 Buffer Memory Map 42
7.4 Buffer Memory Configuration 43
7.5 Buffer Memory Details 44
7.6 Outline of PNU 51
7.7 Profibus PNU 52
7.7.1 Real-time monitor 52
7.7.2 Parameter clear 54
7.7.3 Operation mode read/write 54
7.7.4 Set frequency read 54
7.7.5 Terminal input read 55
7.7.6 Inverter reset 55

7.7.7 Node address read 55
7.7.8 Alarm definition read 56
7.7.9 PNU list read 60
7.8 Standard Parameters 61

8 PPO TYPE NON SUPPORT SPECIFICATION 64

8.1 Profibus Profiles 64
8.2 ID definitions 65
8.3 Buffer memory map 65
8.4 Buffer Memory Configuration 66
8.5 Buffer Memory Details 67
8.6 Outline of PNU 72
8.7 Profibus PNU (Module Type A5NP) 73
8.7.1 Real time monitor area (IND=0000H (IND=00H, PP=00H)) 73
8.7.2 System environment variable (sev) area (IND = 01PPH (IND = 01H, PP = 00H, 01H)) 75
8.8 Standard Parameters 79
8.8.1 Normal parameter area (IND = 0200H (IND = 02H, PP = 00H)) 79
8.8.2 Pr. 900 to calibration parameter (frequency) area (IND=0300H (IND=03H, PP=00H)) 80
8.8.3 Pr. 900 to calibration parameter (%) area (IND=0400H (IND=04H, PP=00H)) 81

9 TROUBLESHOOTING 82

1 PRE-OPERATION INSTRUCTIONS

1.1 Inverter Type

The inverter type, 55K and 75K stated in this Instruction Manual differs according to each -NA, -EC, -CH versions. Refer to the following correspondence table for each inverter type. *(Refer to the instruction manual of each inverter for the inverter type.)*

For example, "for the 75K or more" indicates "for the FR-A740-01440-NA or more" in the case of FR-A740 series of NA version.

	NA	EC	CH
FR-F720-55K	FR-F720-02330-NA	—	—
FR-F720-75K	FR-F720-03160-NA	—	—
FR-F740-55K	FR-F740-01160-NA	FR-F740-01160-EC	FR-F740-55K-CH
FR-F740-75K	FR-F740-01800-NA	FR-F740-01800-EC	FR-F740-S75K-CH
FR-A720-55K	FR-A720-02150-NA	—	—
FR-A720-75K	FR-A720-02880-NA	—	—
FR-A740-55K	FR-A740-01100-NA	FR-A740-01800-EC	FR-A740-55K-CHT
FR-A740-75K	FR-A740-01440-NA	FR-A740-02160-EC	FR-A740-75K-CHT

1.2 Unpacking and Product Confirmation

Take the plug-in option out of the package, check the unit name, and confirm that the product is as you ordered and intact.
This product is a plug-in option for the FR-A700 series inverter and FR-F700 series inverter assembled in and after December 2004.
Check the SERIAL number indicated on the rating plate or package.

- **SERIAL number check**

  Refer to the inverter manual for the position of the rating plate.

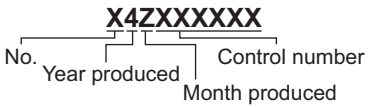

The SERIAL is made up of 1 version symbol, 2 numeric characters or 1 alphabet letter and 2 numeric characters indicating year and month, and 6 numeric characters indicating control number.
Month is indicated as 1 to 9, X (October), Y (November), and Z (December).

1.2.1 Packing confirmation

Check the enclosed items.

Plug-in option ..... 1 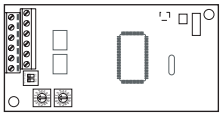	Mounting screw (M3 × 6mm) ..... 2 *(Refer to page 8.)* 	Hex-head screw for option mounting (5.5mm) ..... 1 *(Refer to page 8.)*
Communication option LED display cover ..... 1 *(Refer to page 7.)* 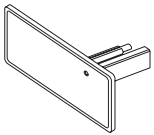	PROFIBUS® is a registered trademark of PROFIBUS User Organization.	

1.2.2 Parts

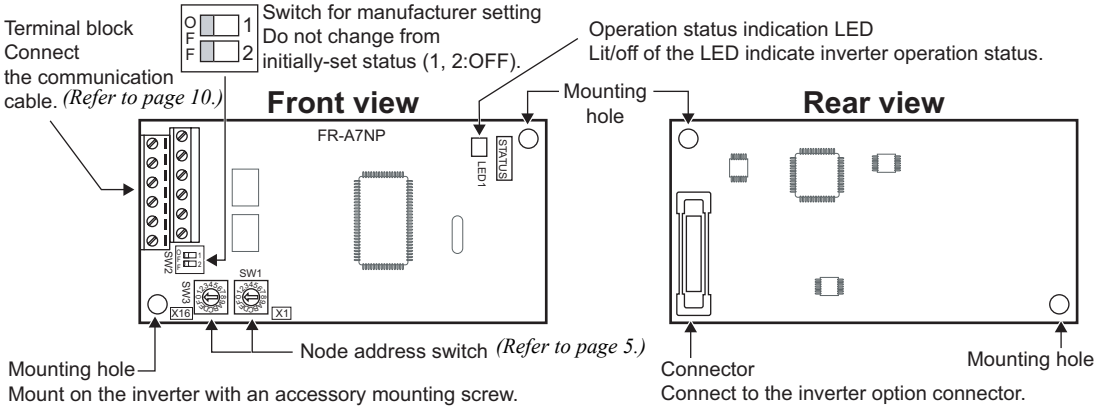

Terminal layout

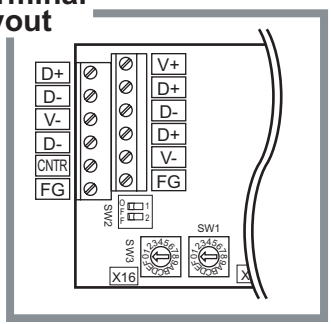

Name	Function	
Node address switch	Set the inverter address within the range of 0H to 7DH.	
Operation status indication LED	Off	Inverter power off
	Red is lit	A communication error with the master occurred
	Green is lit	During communication with the master

1.3 Node Address Setting

•Setting with node address switch

Set the node address between "0H to 7DH" using node address switches on the FR-A7NP *(refer to page 4)*.
The setting is reflected at the next power-on or inverter reset.
Set the arrow (⇧) of the corresponding switches to the number and alphabet to set a desired address.

•Setting example

Node address 1: Set the "⇧ " of x16(SW3) to "0" and the "⇧ " of x1(SW1) to "1". 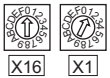	Node address 26: Set the " ⇧" of x16(SW3) to "2" and the "⇧ " of x1(SW1) to "1". 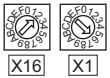

CAUTION

1. **Set the node address switch to the switch number (alphabet) position correctly. If the switch is set between numbers, normal data communication can not be made.**
2. **Do not set the node address to 7EH through FFH.**
3. **Depending on the master module, 0H, 1H, 2H, 7CH, 7DH of node address may not be used.**
4. **You cannot set the same node address to other devices on the network. (Doing so disables proper communication.)**
5. **Set the inverter node address before switching on the inverter and do not change the setting while power is on. Otherwise you may get an electric shock.**

Good example

Bad example

1.4 Specifications

1.4.1 Inverter option specifications

Type	Inverter plug-in option type
Number of nodes occupied	One inverter occupies one node.
Connection cable	Cable which supports 12.0Mbps communication (EEIA-485(RS-485) standard)

1.4.2 Communication specifications

Communication speed	Wiring length 1200m or less	9600bps, 19.2Kbps, 93.75Kbps
	Wiring length 600m or less	187.5Kbps
	Wiring length 200m or less	500Kbps, 1.5Mbps
	Wiring length 100m or less	3.0Mbps, 6.0Mbps, 12.0Mbps

2 INSTALLATION

2.1 Pre-Installation Instructions

Make sure that the input power of the inverter is off.

⚠ CAUTION

⚠ **With input power on, do not install or remove the plug-in option. Otherwise, the inverter and plug-in option may be damaged.**

2.2 Installation of the Communication Option LED Display Cover

Mount the cover for displaying the operation status indication LED for the communication option on the inverter front cover.

1) Cut off hooks on the rear of the inverter front cover with nipper, etc. and open a window for fitting the LED display cover.

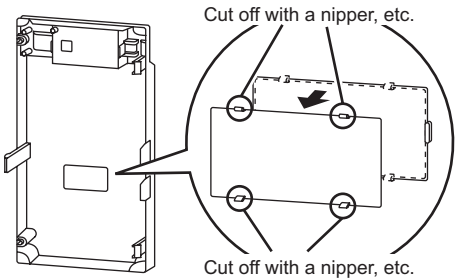

2) Fit the communication option LED display cover to the front of the inverter front cover and push it into until fixed with hooks.

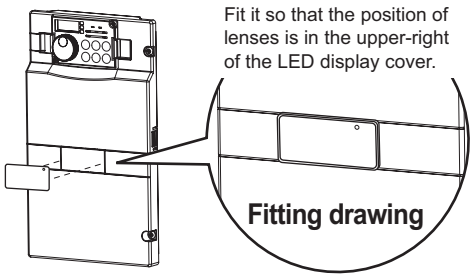

⚠ CAUTION

⚠ **Take care not to hurt your hand and such with portions left by cutting hooks of the rear of the front cover.**

2.3 Installation Procedure

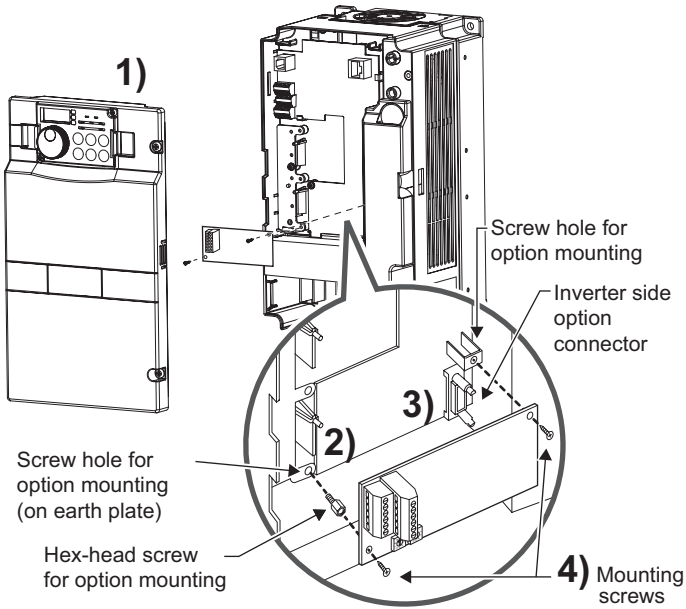

1) Remove the inverter front cover.

2) Mount the hex-head screw for option mounting into the inverter screw hole (on earth plate). (size 5.5mm, tightening torque 0.56N·m to 0.75N·m)

3) Securely fit the connector of the plug-in option to the inverter connector along the guides.

4) Securely fix the both right and left sides of the plug-in option to the inverter with the accessory mounting screws. If the screw holes do not line-up, the connector may not have been plugged snugly. Check for loose plugging.

REMARKS

After removing two screws on the right and left places, remove the plug-in option.
(The plug-in option is easily removed if thecontrol circuit terminal block is removed before.)

CAUTION

- **When using the FR-A7NP with the FR-A700 series inverter, mount it in the "option connector 3 (lowermost connector)" of the inverter.**

  If it is fitted in option connector 1 or 2, " E. 1 " or " E. 2 " (option alarm) is displayed and the inverter will not function. In addition, when the inverter can not recognize that the option is mounted due to improper installation, etc., " E. 3 " (option alarm) is displayed even if the option is fitted in the option connector 3.

Mounting Position	Error Display
Connector 1	E. 1
Connector 2	E. 2
Connector 3	E. 3

- **The FR-F700 series has one connection connector for the plug-in option. When the inverter can not recognize that the option unit is mounted due to improper installation, etc., " E. 1 " (option alarm) is displayed.**
- **Take care not to drop a hex-head screw for option mounting or mounting screw during mounting and removal.**
- **Pull out the option straight to remove. Otherwise, the connector may be damaged by some applied force.**

3.1 Terminal Block

Terminal block layout

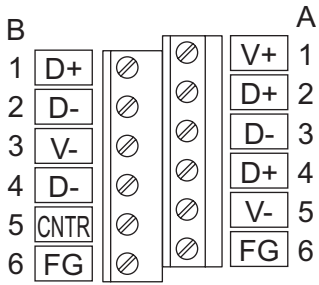

Terminal No.	Terminal Name	Definition
1-A	V+ (VP)*1	Voltage output (approx. 5V to V-)
1-B	D+ (RXD/TXD-P)	Send and receive profibus signal+
2-A	D+ (RXD/TXD-P)	Send and receive profibus signal+
2-B	D+ (RXD/TXD-N)	Send and receive profibus signal-
3-A	D+ (RXD/TXD-N)	Send and receive profibus signal-
3-B	V- (DGND)*1	GND of D+/D-
4-A	D+ (RXD/TXD-P)	Send and receive profibus signal+
4-B	D+ (RXD/TXD-N)	Send and receive profibus signal-
5-A	V- (DGND)*1	GND of D+/D-
5-B	CNTR *2	Control signal (sending request from the inverter)
6-A	FG	(connected to the earth of the inverter unit)
6-B	FG	(connected to the earth of the inverter unit)

*1 Use when selecting a terminating resistor.

*2 It may not be necessary depending on the master used.

3.2 Wiring

Use the network connection cable which supports 12.0Mbps communication.

(1) Strip off the sheath of the PROFIBUS communication dedicated cable and wind wires and shield cables to use. If the length of the sheath pealed is too long, a short circuit may occur among neighboring wires. If the length is too short, cables and shield cables might come off.

Cable stripping size

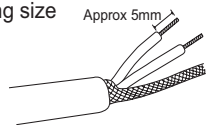

Wire the stripped cable after twisting it to prevent it from becoming loose.
In addition, do not solder it.
Use a bar type terminal as required.

(2) Loosen the terminal screw and insert the cable into the terminal.
Tighten each cable with fixing screws to the recommended tightening torque.

<Cable connection example>

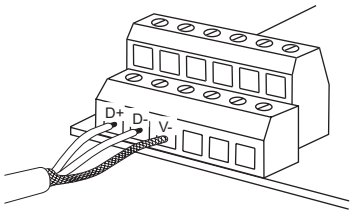

<Connection example of multiple inverters>

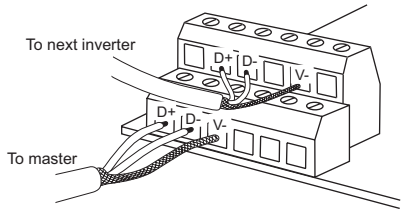

Screw Size	Tightening Torque	Cable Size	Screwdriver
M2	0.22N•m to 0.25N•m	0.3mm^2 to 0.75mm^2	Small ⊖ flat-blade screwdriver (Tip thickness: 0.4mm /tip width: 2.5mm)

CAUTION

Undertightening can cause cable disconnection or malfunction. Overtightening can cause a short circuit or malfunction due to damage to the screw or unit.

(3) Terminating resistor

If the node at both ends of the network are the FR-A7NP and inverter, connect a connector with a built-in terminating resistor.

Connection example

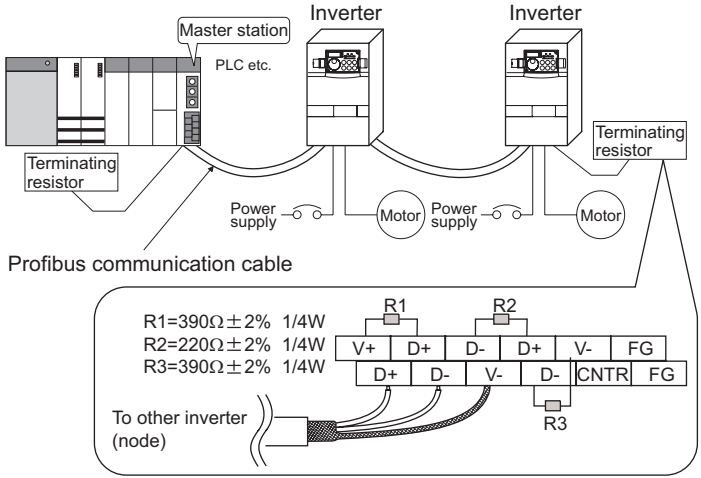

(4) For wiring of **the FR-A700 series 22K* or less and the FR-F700 series 30K* or less**, route wires between the control circuit terminal block and front cover. If cables can not be routed between the control circuit terminal block and front cover (approx 7mm), remove a hook of the front cover and use a space become available.
For wiring of **the FR-A700 series 30K* or more and the FR-F700 series 37K* or more**, use the space on the left side of the control circuit terminal block.

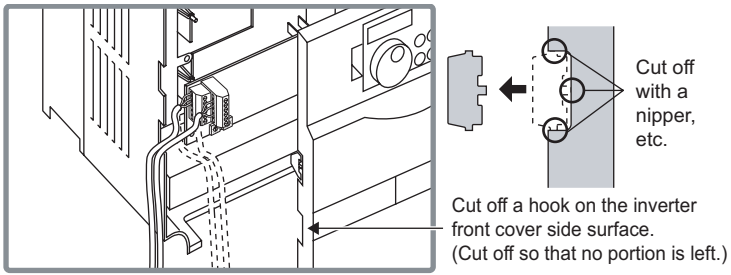

FR-A700 series 22K or less and FR-F700 series 30K or less

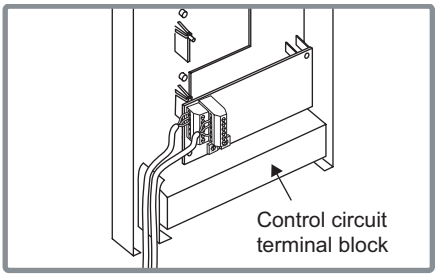

FR-A700 series 30K or more and FR-F700 series 37K or more

* The inverter type of 22K and 30K of FR-A700 series, 30K and 37K of FR-F700 series in each -NA, -EC versions are as follows.

	NA	EC
FR-A700 series 22K	FR-A720-00900-NA	—
(FR-A720-22K, FR-A740-22K)	FR-A740-00440-NA	FR-A740-00620-EC
FR-A700 series 30K	FR-A720-01150-NA	—
(FR-A720-30K, FR-A740-30K)	FR-A740-00570-NA	FR-A740-00770-EC
FR-F700 series 30K	FR-F720-01250-NA	—
(FR-F720-30K, FR-F740-30K)	FR-F740-00620-NA	FR-F740-00620-EC
FR-F700 series 37K	FR-F720-01540-NA	—
(FR-F720-37K, FR-F740-37K)	FR-F740-00770-NA	FR-F740-00770-EC

REMARKS

- When the hook of the inverter front cover is cut off for wiring, the protective structure (JEM1030) changes to open type (IP00).

⚠ CAUTION

⚠ **When performing wiring using the space between the inverter front cover and control circuit terminal block, take care not to subject the cable to stress.**

⚠ **After wiring, wire offcuts must not be left in the inverter. They may cause an error, failure or malfunction.**

4.1 Parameter List

The following parameters are used for the communication option (FR-A7NP)
Set the values according to need.

Parameter Number	Name	Setting Range	Minimum Setting Increments	Initial Value	Refer to page
79	Operation mode selection	0 to 4, 6, 7	1	0	17
338	Communication operation command source	0, 1	1	0	20
339	Communication speed command source	0, 1, 2	1	0	20
340	Communication startup mode selection	0, 1, 2, 10, 12	1	0	17
342	Communication EEPROM write selection	0, 1	1	0	24
349*1	Communication reset selection	0, 1	1	0	32
500*1	Communication error execution waiting time	0 to 999.8s	0.1s	0	25
501*1	Communication error occurrence count display	0	1	0	26
502*1	Stop mode selection at communication error	0, 1, 2, 3	1	0	27
550	NET mode control source selection	0, 1, 9999	1	9999	20

*1 Parameters which can be displayed when the plug-in option (FR-A7NP) is mounted.

4.2 Operation Mode Setting

The inverter mounted with a communication option has three operation modes.

(1) PU operation [PU]..... Controls the inverter from the key of the operation panel (FR-DU07) mounted on the inverter.

(2) External operation [EXT] ... Controls the inverter by switching on/off external signals connected to the control circuit terminals of the inverter.
(The inverter is factory-set to this mode.)

(3) Network operation [NET] ... Controls the inverter with instructions from the network via the communication option.
(The operation signal and running frequency can be entered from the control circuit terminals depending on the *Pr. 338 Communication operation command source* and *Pr. 339 Communication speed command source* setting. *Refer to page 21*.)

4.2.1 Operation mode indication

FR-DU07

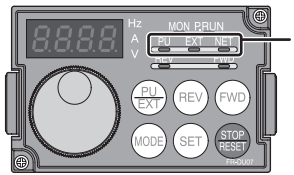

Operation mode indication
(The inverter operates according to the LED lit mode.)
PU: PU operation mode
EXT: External operation mode
NET: Network operation mode

4.2.2 Operation mode switching and communication startup mode (Pr. 79, Pr. 340)

(1) Operation mode switching conditions

Before switching the operation mode, check that:
1) The inverter is at a stop;
2) Both the STF and STR signals are off; and
3) The *Pr. 79 Operation mode selection* setting is correct.
(Set with the operation panel of the inverter.)
Refer to *the inverter manual (applied)* for details of *Pr. 79*.

(2) Operation mode selection at power on and at restoration from instantaneous power failure

The operation mode at power on and at restoration from instantaneous power failure can be selected.
Set a value other than "0" in *Pr. 340* to select the network operation mode.
After started in network operation mode, parameter write from the network is enabled.

REMARKS

1. Change of the *Pr. 340* setting is made valid when powering on or resetting the inverter.
2. *Pr. 340* can be changed with the operation panel independently of the operation mode.

Pr. 340 Setting	*Pr. 79* Setting	Operation Mode at Power on or Power Restoration	Operation Mode Switchover
0 (initial value)	0 (initial value)	External operation mode	Switching among the external, PU, and NET operation mode is enabled *1
	1	PU operation mode	PU operation mode fixed
	2	External operation mode	Switching between the external and Net operation mode is enabled Switching to the PU operation mode is disallowed
	3, 4	External/PU combined operation mode	Operation mode switching is disallowed
	6	External operation mode	Switching among the external, PU, and NET operation mode is enabled while running.
	7	X12 (MRS) signal ON ..... external operation mode	Switching among the external, PU, and NET operation mode is enabled *1
		X12 (MRS) signal OFF ... external operation mode	External operation mode fixed (Forcibly switched to external operation mode.)
1, 2 *2	0	NET operation mode	Same as when *Pr. 340* = "0"
	1	PU operation mode	
	2	NET operation mode	
	3, 4	External/PU combined operation mode	
	6 *4	NET operation mode	
	7	X12 (MRS) signal ON .... NET operation mode	
		X12 (MRS) signal OFF ... external operation mode	
10, 12 *2	0	NET operation mode	Switching between the PU and NET operation mode is enabled *3
	1	PU operation mode	Same as when *Pr. 340* = "0"
	2	NET operation mode	NET operation mode fixed
	3, 4	External/PU combined operation mode	Same as when *Pr. 340* = "0"
	6 *4	NET operation mode	Switching between the PU and NET operation mode is enabled while running *3
	7	External operation mode	Same as when *Pr. 340* = "0"

*1 Operation mode can not be directly changed between the PU operation mode and network operation mode.

*2 The *Pr. 340* settings "2, 12" are mainly used for communication operation using the inverter RS-485 terminal.
When a value other than "9999" (selection of automatic restart after instantaneous power failure) is set in *Pr. 57 Restart coasting time*, the inverter will resume the same operation state which was in before after power has been restored from an instantaneous power failure. When *Pr.340* = "1, 10", run command from communication turns off after instantaneous power failure.

*3 Operation mode can be changed between the PU operation mode and network operation mode with PU/EXT of the operation panel (FR-DU07) and X65 signal.

*4 *Pr. 79* = "6" and *Pr. 128* to *Pr. 134 (PID control)* are not activated simultaneously. Switchover mode and PID control are made invalid, and the inverter performs the same operation as when "0" is set in *Pr. 79*.

(3) Operation mode switching method

When "0, 1, or 2" is set in Pr. 340

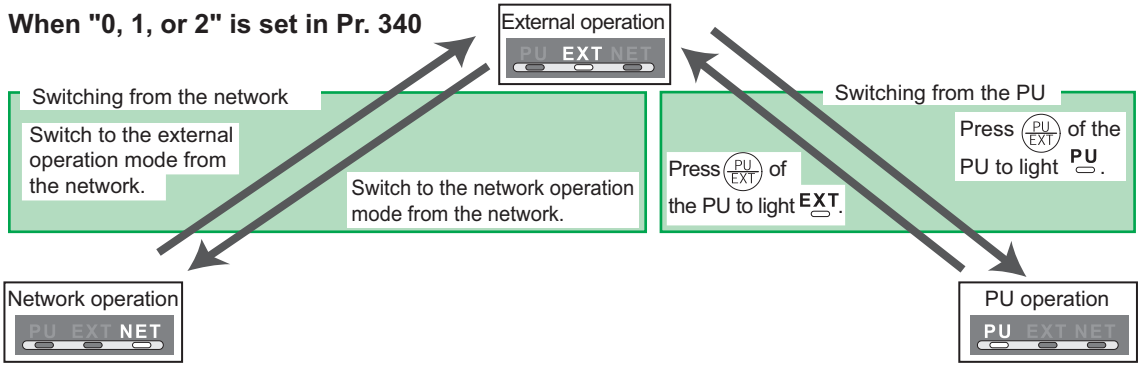

When "10 or 12" is set in Pr. 340

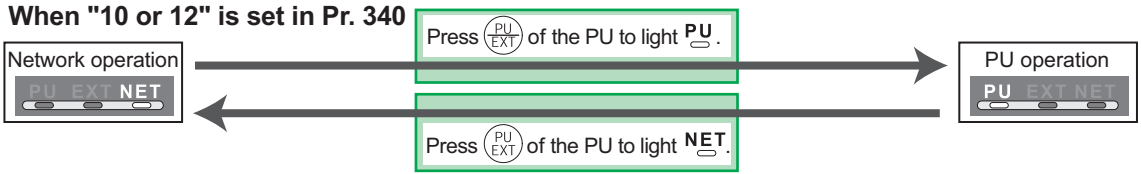

For the switching method from the external terminal, refer to *the inverter manual (applied)*.
Refer to *page 54* and *77* for a switching method from the network.

CAUTION

- When starting the inverter in network operation mode at powering on or an inverter reset, set a value other than 0 in *Pr. 340*. *(Refer to page 17)*
- When setting a value other than 0 in *Pr. 340*, make sure that the initial settings of the inverter are correct.

4.3 Operation and Speed Command Source (Pr. 338, Pr. 339, Pr. 550)

(1) Select control source for the network operation mode *(Pr. 550)*

A control location for the network operation mode can be selected from either the inverter RS-485 terminal or communication option.

When using a communication option, set "0 or 9999 (initial value)" in *Pr. 550*.

Parameter Number	Name	Initial Value	Setting Range	Description
550	NET mode operation command source selection	9999	0	Control source of the communication option is valid (control source of the inverter RS-485 terminal is invalid)
			1	Control source of the inverter RS-485 terminal is valid (control source of the communication option is invalid)
			9999	Automatic recognition of the communication option Normally, control source of the RS-485 terminal is valid. When a communication option is mounted, the control source of the communication option is valid.

Refer to the inverter manual (applied) for details.

(2) Selection of control source for the network operation mode (*Pr. 338*, *Pr. 339*)

- As control sources, there are operation command source that controls signals related to the start command and function selection of the inverter and speed command source that controls signals related to frequency setting.
- In network operation mode, commands from the external terminals and communication are as listed below.

Control Location Selection				*Pr. 338 Communication operation command source*	0:NET			1:External			Remarks
				Pr. 339 Communication speed command source	0:NET	1: External	2: External	0:NET	1: External	2: External	
Fixed functions (Functions equivalent to terminals)				Running frequency from communication	NET	—	NET	NET	—	NET	
				Terminal 2	—	External	—	—	External	—	
				Terminal 4	—	External		—	External		
				Terminal 1	Compensation						
Selective functions	*Pr. 178 to Pr. 189* settings	0	RL	Low-speed operation command/ remote setting clear	NET	External		NET	External		*Pr. 59* = "0" (multi-speed) *Pr. 59* = "1, 2" (remote)
		1	RM	Middle-speed operation command/ remote setting deceleration	NET	External		NET	External		
		2	RH	High-speed operation command/ remote setting acceleration	NET	External		NET	External		
		3	RT	Second function selection	NET			External			
		4	AU	Terminal 4 input selection	—	Combined		—	Combined		
		5	JOG	Jog operation selection	—			External			
		6	CS	Automatic restart after instantaneous power failure selection	External						
		7	OH	External thermal relay input	External						
		8	REX	15-speed selection	NET	External		NET	External		*Pr. 59* = "0" (multi-speed)
		9	X9	Third function *1	NET			External			
		10	X10	Inverter operation enable signal	External						

4

Control Location Selection				Pr. 338 Communication operation command source / Pr. 339 Communication speed command source	0:NET			1:External			Remarks
					0:NET	1: External	2: External	0:NET	1: External	2: External	
Selective functions	Pr. 178 to Pr. 189 settings	11	X11	FR-HC connection, instantaneous power failure detection	External						
		12	X12	PU operation external interlock	External						
		13	X13	External DC injection brake operation is started *3	NET			External			
		14	X14	PID control valid terminal	NET	External		NET	External		
		15	BRI	Brake opening completion signal *1	NET			External			
		16	X16	PU operation-external operation switching	External						
		17	X17	Load pattern selection forward rotation reverse rotation boost *1	NET			External			
		18	X18	V/F swichover *1	NET			External			
		19	X19	Load torque high speed frequency *1	NET			External			
		20	X20	S-pattern acceleration/deceleration C switching terminal *1	NET			External			
		22	X22	Orientation command *1, *2	NET			External			
		23	LX	Pre-excitation *1	NET			External			
		24	MRS	Output stop	Combined			External			Pr. 79 ≠ "7"
				PU operation interlock	External						Pr. 79 = "7" When the X12 signal is not assigned
		25	STOP	Start self-holding selection	—			External			
		26	MC	Control mode swichover *1	NET			External			
		27	TL	Torque limit selection *1	NET			External			
		28	X28	Start time tuning *1	NET			External			
		37	X37	Traverse function selection *4	NET			External			
		42	X42	Torque bias selection 1 *1, *2	NET			External			
		43	X43	Torque bias selection 2 *1, *2	NET			External			
		44	X44	P/PI control switchover *1	NET			External			

Control Location Selection				*Pr. 338 Communication operation command source*	0:NET			1:External			Remarks
				Pr. 339 Communication speed command source	0:NET	1: External	2: External	0:NET	1: External	2: External	
Selective functions	*Pr. 178 to Pr. 189* settings	60	STF	Forward rotation command	NET			External			
		61	STR	Reverse rotation command	NET			External			
		62	RES	Reset	External						
		63	PTC	PTC thermistor selection	External						
		64	X64	PID forward rotation action switchover	NET	External		NET	External		
		65	X65	PU/NET operation switchover	External						
		66	X66	NET/external operation switchover	External						
		67	X67	Command source switchover	External						
		68	NP	Conditional position pulse train sign *1, *2	External						
		69	CLR	Conditional position droop pulse clear *1, *2	External						
		70	X70	DC feeding operation permission *1	NET			External			
		71	X71	DC feeding cancel *1	NET			External			

*1 Setting can be made only for the FR-A700 series.
*2 Available only when used with the FR-A7AP.
*3 For the FR-F700 series, setting can be made only for the EC and NA versions.
*4 Setting can be made only for the EC and CH versions.

[Explanation of table]
External :Control by signal from external terminal is only valid.
NET :Control from network is only valid
Combined :Operation from either external terminal or communication is valid.
— :Operation from either external terminal or computer is invalid.
Compensation :Control by signal from external terminal is only valid if *Pr. 28 Multi-speed input compensation* setting is "1".

4.3.1 Communication EEPROM write selection (Pr. 342)

When parameter write is performed from the communication option, write to RAM is enabled. Set when frequent parameter changes are necessary.

Parameter Number	Name	Initial Value	Setting Range	Description
342	Communication EEPROM write selection	0	0	Parameter values written by communication are written to the EEPROM and RAM.
			1	Parameter values written by communication are written to the RAM.

- When changing the parameter values frequently, set "1" in *Pr. 342* to write them to the RAM. Performing frequent parameter write with "0 (initial value)" (EEPROM write) set in will shorten the life of the EEPROM.

REMARKS

When "1" is set in *Pr. 342* (write to RAM only), powering off the inverter will erase the changed parameter values. Therefore, the parameter values available when power is switched on again are the values stored in EEPROM previously.

4.4 Operation at Communication Error Occurrence

4.4.1 Operation selection at communication error occurrence (Pr. 500 to Pr. 502)

You can select operations at communication error occurrences by setting *Pr. 500 to Pr. 502* under network operation.

(1) The set time from when a communication line error occurrence until communication error output

You can set the waiting time from when a communication line error occurs until it is recognized as a communication error.

Parameter Number	Name	Setting Range	Minimum Setting Increments	Initial Value
500	Communication error execution waiting time	0 to 999.8s	0.1s	0

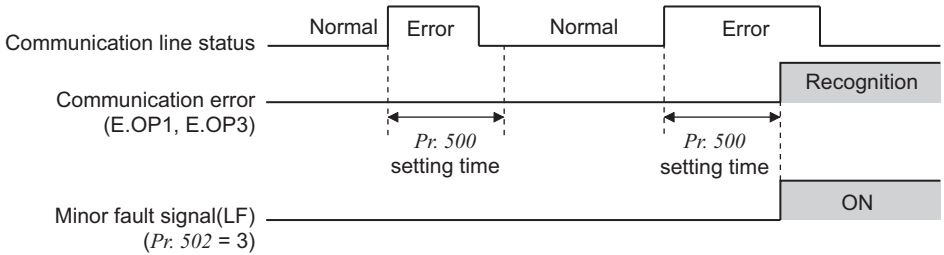

If the communication line error still persists after the time set in *Pr. 500* has elapsed, it is recognized as a communication error.

When the error is restored to normal communication within the set time, it is not regarded as a communication error and operation continues.

(2) Display and erasure of communication error occurrence count

The cumulative number of communication error occurrences can be indicated.
Write "0" to erase this cumulative count.

Parameter Number	Name	Setting Range	Minimum Setting Increments	Initial Value
501	Communication error occurrence count display	0	1	0

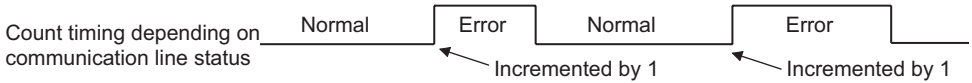

At the point of communication line error occurrence, *Pr. 501 Communication error occurrence count display* is incremented by 1.

CAUTION

The communication error count occurrence is stored into RAM temporarily. Since this data is stored in EEPROM at one-hour intervals, performing power-on reset or inverter may cause the *Pr. 501* data to be the value stored in EEPROM the last time depending on the reset timing.

(3) Inverter operation selection at communication error occurrence

You can select the inverter operation if a communication line error or an error of the option unit itself occurs.

Parameter Number	Name	Setting Range	Minimum Setting Increments	Initial Value
502	Stop mode selection at communication error	0, 1, 2, 3	1	0

About setting

●Operation at error occurrence

Alarm Definition	*Pr. 502* Setting	Operation	Indication	Alarm Output
Communication line	0	Continued *	Normal indication *	Not provided *
	1			
	2			
	3			
Communication option itself	0, 3	Coast to stop	E. 1 or E. 3 lit	Provided
	1, 2	Decelerated to stop	E. 1 or E. 3 lit after stop	Provided after stop

* When the error returns to normal communication within the time set in *Pr. 500,* it is not regarded as a communication line error (E.OP1 or E.OP3).

●Operation at error recognition after elapse of *Pr. 500* time

Alarm Definition	*Pr. 502* Setting	Operation	Indication	Alarm Output
Communication line	0	Coast to stop	E.OP1 or E.OP3 lit	Provided
	1	Decelerated to stop	E.OP1 or E.OP3 lit after stop	Provided after stop
	2			Not provided
	3	Continued	Normal indication	
Communication option itself	0, 3	Coast to stop	E. 1 or E.3 lit	Provided
	1, 2	Decelerated to stop	E. 1 or E.3 lit after stop	Provided after stop

●Operation at error removal

Alarm Definition	*Pr. 502* Setting	Operation	Indication	Alarm Output
Communication line	0	Kept stopped	E.OP1 or E.OP3 kept lit	Kept provided
	1			
	2	Restart	Normal indication	Not provided
	3	Continued		
Communication option itself	0, 3	Kept stopped	E. 1 or E.3 kept lit	Kept provided
	1, 2			

CAUTION

1. **A communication line error [E.OP1 (alarm data: HA1), E.OP3 (alarm data: HA3)] is an error that occurs on the communication line, and an error of the communication option unit itself [E. 1 (alarm data: HF1), E. 3 (alarm data: HF3)] is a communication circuit error in the option.**
2. **The alarm output indicates alarm output signal (terminal ABC1) or alarm bit output.**
3. **When the setting was made to provide an alarm output, the error definition is stored into the alarm history. (The error definition is written to the alarm history when an alarm output is provided.)**
   When no alarm output is provided, the error definition overwrites the alarm indication of the alarm history temporarily, but is not stored.
   After the error is removed, the alarm indication is reset and returns to the ordinary monitor, and the alarm history returns to the preceding alarm indication.
4. **When the *Pr. 502* setting is "1" or "2", the deceleration time is the ordinary deceleration time setting (e.g. *Pr. 8*, *Pr. 44*, *Pr. 45*).**
5. **The acceleration time at a restart is the ordinary acceleration time setting (e.g. *Pr. 7*, *Pr. 44*).**
6. **When the *Pr. 502* setting is "2", the operation/speed command at a restart is the one given before the error occurrence.**
7. **When a communication line error occurs at the *Pr. 502* setting of "2", removing the error during deceleration causes acceleration to restart at that point. (Acceleration is not restarted if the error is that of the option unit itself.)**

4.4.2 Alarm and measures

(1) The inverter operates as follows at alarm occurrences.

Alarm Location	Status		Operation Mode		
			Network Operation	**External Operation**	**PU Operation**
Inverter	Inverter operation		**Inverter trip**	Inverter trip	Inverter trip
	Data communication		**Continued**	Continued	Continued
Communication line	Inverter operation		**Inverter trip (depends on the *Pr. 502* setting)**	Continued	Continued
	Data communication		**Stop**	Stop	Stop
Communication option	Communication option connection error	Inverter operation	**Inverter trip (depends on the *Pr. 502* setting)**	Inverter trip (depends on the *Pr. 502* setting)	Inverter trip (depends on the *Pr. 502* setting)
		Data communication	**Continued**	Continued	Continued
	Error of communication option itself	Inverter operation	**Inverter trip (depends on the *Pr. 502* setting)**	Continued	Continued
		Data communication	**Stop**	Stop	Stop

(2) Measures at alarm occurrences

Alarm Indication	Alarm Definition	Measures
E.OP1, E.OP3	Communication line error	Check the LED status of the option unit and remove the cause of the alarm. (Refer to *page 4* for LED indication status) Check the other nodes on the network. Inspect the master.
E.1, E.2, E.3	Option alarm	Check the connection between the inverter and option unit for poor contact, etc. and remove the cause of the error. For the FR-A700 series, fit the communication option in the option connector 3.

When alarms other than the above are displayed, refer to the inverter manual and remove the cause of the alarm.

4.5 Inverter Reset

(1) Operation conditions of inverter reset

Which resetting method is allowed or not allowed in each operation mode is described below.

Resetting Method			Operation Mode		
			Network Operation	External Operation	PU Operation
Reset from the network	Inverter reset *(Refer to page 55)* *1		Allowed	Disallowed	Disallowed
	Error reset (STW(bit7))at inverter fault *(Refer to page 46)* *2	*Pr.349* = 0	Allowed	Allowed	Allowed
		Pr.349 = 1		Disallowed	Disallowed
Turn on the terminal RES (RES signal)			Enabled	Enabled	Enabled
Switch off inverter power			Enabled	Enabled	Enabled
Reset from the PU/DU	Inverter reset		Enabled	Enabled	Enabled
	Reset at inverter fault		Enabled	Enabled	Enabled

*1 Inverter reset can be made any time.
*2 Reset can be made only when the protective function of the inverter is activated. (available with PPO type 1 to 5 only)

CAUTION

1. **When a communication line error has occurred, reset cannot be made from the network.**
2. **The inverter is set to the external operation mode if it has been reset in network operation mode. To resume the network operation, the inverter must be switched to the network operation mode again. Set a value other than "0" in *Pr. 340* to start in network operation mode. *(Refer to page 17.)***
3. **The inverter can not be controlled for about 1s after release of a reset command .**

(2) Error reset operation selection at inverter fault

When used with the communication option (FR-A7NP), an error reset command* from network can be made invalid in the external operation mode or PU operation mode.

Parameter Number	Name	Initial Value	Setting Range	Function
349	Communication reset selection	0	0	Error reset* is enabled independently of operation mode
			1	Error reset* is enabled only in the network operation mode

* An error reset command (STW (bit7)) at inverter fault is available with PPO type 1 to 5. *(Refer to page 46.)*

5.1 Output from the Inverter to the Network

Main items to be output from the inverter (FR-A7NP) to the network and their descriptions are explained below.

Item	Description	Refer to Page	
		PPO type Support Specification	PPO type Non Support Specification
Inverter monitor	Monitor various items such as inverter output frequency and output current.	48, 52	73
Parameter read	Read parameter settings of the inverter.	44, 61	67, 79
Inverter status	Monitor output signal of the inverter.	47	70
Operation mode read	Read the operation mode of the inverter.	47, 54	—
Set frequency read	Read the frequency set in the inverter.	54	77
Terminal input read	Read the analog value of terminal 2, 4, 1.	55	77
Node address read	Read node address of the inverter.	55	—
Alarm definition read	Monitor alarm history occurred in the inverter and energization time, output frequency, output current and output voltage at alarm occurrence are monitored.	56	78
PNU list read	Read the available PNU number.	60	—

REMARKS

Refer to the *inverter manual (applied)* for functions controllable from the network in each operation mode.

5.2 Input to the Inverter from the Network

Main items which can be commanded from the network to the inverter and their descriptions are explained below.

Item	Description	Refer to page	
		PPO type Support Specifications	PPO type Non Support Specifications
Frequency setting	Set the running frequency of the inverter.	48	77
Operation mode write	Set the operation mode of the inverter.	54	77
Run command	Set the control input command such as forward operation signal (STF) and reverse rotation signal (STR).	46	76
Inverter reset	Reset the inverter.	46, 55	75
Parameter write	Set parameters of the inverter.	44, 61	67, 79
Parameter clear	Return parameters to the initial values.	54	75
Input terminal function	Use the function of the inverter input terminal.	49	76

REMARKS

Refer to the *inverter manual (applied)* for functions controllable from the network in each operation mode.

6 PROFIBUS DEVICE DATA

6.1 Device Data (GSD file)

melc08fa.gsd is a GSD file designed to recognize the features and functions of the Profibus-DP devices of the FR-A7NP. You can obtain it from us.
GSD file can be downloaded from Mitsubishi Electric FA Network Service
MELFANS web: http://www.MitsubishiElectric.co.jp/melfansweb or obtained from your sales representative.
When editing this file, use a text editor.
For installation instructions, refer to the instruction manual of the Profibus-DP Configuration Software.
Although this product complies with PPO specification, it includes specification which do not support PPO specification (FR-A5NP intercompatibility protocol). This manual states the section supporting PPO specification as PPO specification and the section not supporting PPO as PPO non support specification.

CAUTION

You can not use the device data which does not include PPO support specification (data for the FR-A5NP).

<melc08fa.gsd>

Parameter	Value	Description *1
#Profibus_DP		File header
GSD_Revision	1	ID version of GSD file
Vendor_Name	"Mitsubishi Electric"	Maker name *2
Model_Name	"FR-A7NP"	Product name
Revision	"Revision 1.00"	Product version
Ident_Number	08FAH	Device number obtained from Profibus Nutzer Organization
Protocol_Ident	0	Profibus-DP is 0 fixed.
Station_Type	0	DP slave is 0 fixed.
FMS_Supp	0	FMS (Field-Bus Message Specifications) not supported.
Hardware_Release	"BC101B376"	Hardware version

Parameter	Value	Description *1
Software_Release	"7732"	Software version
9.6_supp	1	Communication speed 9600bps support
19.2_supp	1	Communication speed 19.2Kbps support
93.75_supp	1	Communication speed 93.75Kbps support
187.5_supp	1	Communication speed 187.5Kbps support
500_supp	1	Communication speed 500Kbps support
1.5M_supp	1	Communication speed 1.5Mbps support
3M_supp	1	Communication speed 3.0Mbps support
6M_supp	1	Communication speed 6.0Mbps support
12M_supp	1	Communication speed 12.0Mbps support
MaxTsdr_9.6	60	Longest time 60 bit times at communication speed 9600bps
MaxTsdr_19.2	60	Longest time 60 bit times at communication speed 19.2Kbps
MaxTsdr_93.75	60	Longest time 60 bit times at communication speed 93.75Kbps
MaxTsdr_187.5	60	Longest time 60 bit times at communication speed 187.5Kbps
MaxTsdr_500	100	Longest time 100 bit times at communication speed 500Kbps
MaxTsdr_1.5M	150	Longest time 150 bit times at communication speed 1.5MKbps
MaxTsdr_3M	250	Longest time 250 bit times at communication speed 3.0Mbps
MaxTsdr_6M	450	Longest time 450 bit times at communication speed 6.0Mbps
MaxTsdr_12M	800	Longest time 800 bit times at communication speed 12.0Mbps

Parameter	Value	Description *1
Redundancy	0	Redundancy not supported.
Repeater_Ctrl_Sig	2	Installed as TTL level via RTS signal from module.
24V_Pins	0	24V power supply for maintenance device connection is not used.
Freeze_Mode_supp	1	Freeze mode supported.
Sync_Mode_supp	1	Synchronous mode supported.
Auto_Baud_supp	1	Automatic baud rate detection support
Set_Slave_Add_supp	0	Slave address is not set.
Min_Slave_Intervall	1	100 μs interval between 2 polling cycles
Modular_Station	1	Modular device specified.
Max_Module	1	Maximum number of modules:1
Max_Input_Len	28	Input data: Maximum 28 bytes
Max_output_Len	28	Output data: Maximum 28 bytes
Max_Data_Len	56	Input and output data: Maximum 28 + 28 = 56 bytes
Fail_Safe	0	Failsafe not supported
Max_Diag_Data_Len	6	Diagnostic data of 6 bytes secured (no external diagnosis)
Slave_Family	1	Drives defined as function class (Main Family)
PrmText	1	Text selection 1 registration
Text(0)	"No byte swapping"	If Bit 0 = 0, "No byte swapping"
Text(1)	"Byte swapping"	If Bit 0 = 1, "Byte swapping"
EndPrmText		
ExtUserPrmData	1 "Byte swapping"	Byte swapping selection 1 registration on text base
Bit(0) 0 0-1		Bit 0 = default 0, range 0 to 1

Parameter	Value	Description *1
Prm_Text_Ref	1	Text selection 1 is used.
EndExtUserPrmData		
Max_User_Prm_Data_Len	2	User parameter of 2 bytes secured
Ext_User_Prm_Data_Const(0)	01H	Initial value of user parameter's 1 byte
Ext_User_Prm_Data_Const(1)	00H	Initial value of user parameter's 2 byte
Ext_User_Prm_Data_Ref(1)	1	Byte swapping selection 1 is used on text base in user parameter's 2 byte.
Module	"PPO type 1" F3H, F1H	PPO type 1 selection
EndModule		
Module	"PPO type 2" F3H, F5H	PPO type 2 selection
EndModule		
Module	"PPO type 3" F1H	PPO type 3 selection
EndModule		
Module	"PPO type 4" F5H	PPO type 4 selection
EndModule		
Module	"PPO type 5" F3H, F9H	PPO type 5 selection
EndModule		
Module	"500 series" 75H	FR-A5NP intercompatibility protocol selection
EndModule		

*1 Description is not included in the ASCII file itself.
*2 Use "Mitsubishi" if the maximum number of characters of the vendor-name of the master used is 10.

6.2 Slave User Parameter

By changing the slave user parameter value, you can use the byte swapping function (byte inversion function).
Setting "1" at Address 1H (Bit 0) makes the byte swapping function valid.
Since "-" is an unused bit, set "0".

Address	FUNCTIONS							
0H	For manufacturer setting (Always set "1".)							
1H	7 Bit	6 Bit	5 Bit	4 Bit	3 Bit	2 Bit	1 Bit	0 Bit
	—	—	—	—	—	—	—	0:Byte swapping invalid 1:Byte swapping valid

example

● Byte swapping invalid (When address 1H (Bit0)=0)

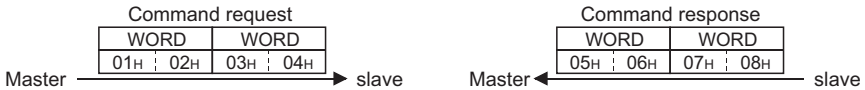

● Byte swapping valid (When address 1H (Bit0)=1)

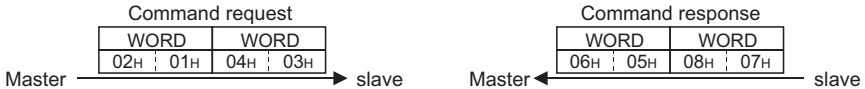

The data is byte swapped in the slave to be a receiving/sending data.

6

7 PPO TYPE SUPPORT SPECIFICATION

7.1 Profibus Profiles

The option unit operates as a "slave of the Profibus DP master" or a "controller equivalent to Profibus DP master class 1 on an RS-485 network".
The Profibus profile (data buffer) can be selected from among six different types, "PPO type1" to "PPO type5", "A5NP". This chapter expalins the profile of Module type "PPO type1" to "PPO type5". For the Module type "A5NP" profile, refer to page *64*.
Module type is changed with the slave module setting. For details, refer to the instruction manual of the Network Master Configuration Software. The configuration of PPO type is as follows.

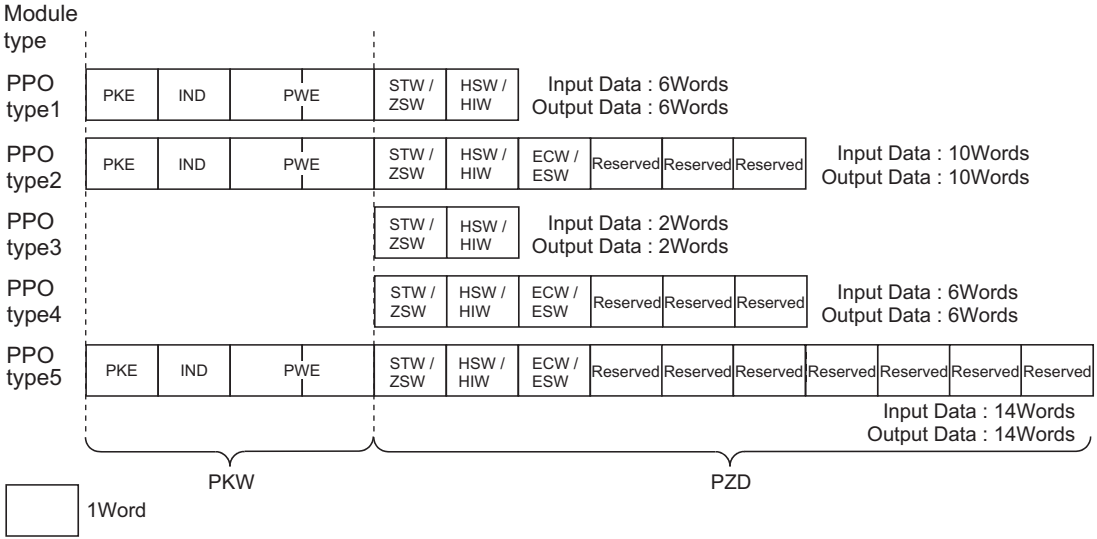

7.2 ID Definitions

ID		Definition
PKW	PKE	PNU number (PNU) and task or response Id (AK)
	IND	Sub-Index number and reserved area for extension
	PWE	Set 0 since high bits (Bits 16 to 31) are not used. Low bits (Bits 0 to 15): Parameter value
PZD	STW/ZSW	STW: Control Word (Command request)*
		ZSW: Status Word (command response)*
	HSW/HIW	HSW: Set frequency (command request)*
		HIW: Output frequency (command response)*
	ECW/ESW	ECW: Extended Control Word (Command request)*
		ECW: Extended Status Word (Command response)*
	Reserved	Reserved area for extension

*Command request:Message from the master to the slave
Command response:Message from the slave to the master

7.3 Buffer Memory Map

The following shows the buffer memory map of the PPO type1 to PPO type5 Profibus profiles.

Module type	1Word	2Word	3Word	4Word	5Word	6Word	7Word	8Word	9Word	10Word	11Word	12Word	13Word	14Word
PPO type1	PKE	IND	PWE		STW / ZSW	HSW / HIW								
PPO type2	PKE	IND	PWE		STW / ZSW	HSW / HIW	ECW / ESW	Reserved	Reserved	Reserved				
PPO type3	STW / ZSW	HSW / HIW												
PPO type4	STW / ZSW	HSW / HIW	ECW / ESW	Reserved	Reserved	Reserved								
PPO type5	PKE	IND	PWE		STW / ZSW	HSW / HIW	ECW / ESW	Reserved	Reserved	Reserved	Reserved	Reserved	Reserved	Reserved

7.4 Buffer Memory Configuration

The buffer memory configuration is shown below.

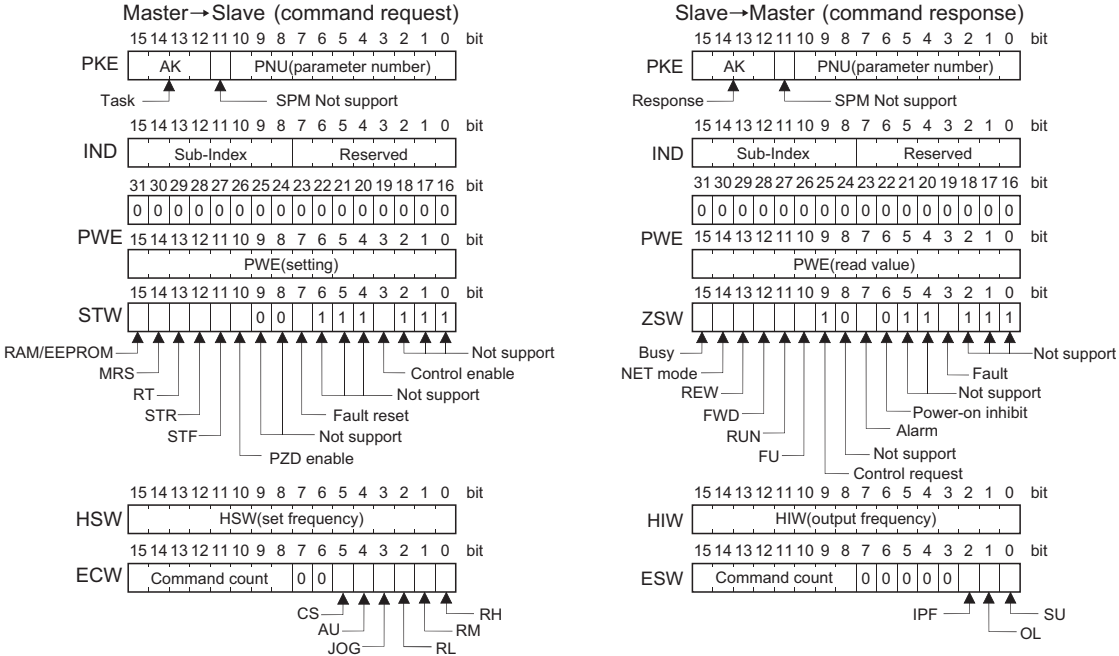

For buffer memory details, refer to *page 44*.

7.5 Buffer Memory Details

The following indicates the buffer memory details of the Profibus profiles.

Name			Bit	Definition
PKW	PKE	PNU	0 to 10	PNU number
		SPM	11	Not used (0 is set)
		AK	12 to 15	[Command request] 0 : No task 1 : Parameter value is requested (read request) 2 : Parameter value (word) is changed (write request) 3 to 5 : Non-supported 6 : Parameter value (array) is requested (read request) 7 : Parameter value (array word) is changed (write request) 8 to 15 : Non-supported [Command response] 0 : No response (Busy status) 1 : Parameter value (word) is transferred. 2 to 3 : Non-supported 4 : Parameter value (array word) is transferred. 5 to 6 : Non-supported 7 : Command execution error (error number is stored into PWE) 8 to 15 : Non-supported
	IND		0 to 7	Reserved area for extension (0 is set)
			8 to 15	Sub-Index number At command request, set this number when AK =6, 7.

<table>
<tr><th colspan="2">Name</th><th>Bit</th><th>Definition</th></tr>
<tr><td rowspan="2">PKW</td><td rowspan="2">PWE</td><td>0 to 15</td><td>PNU read value/write value
When command response AK = 7 (command execution error), PWE definition is as follows.
<table>
<tr><th></th><th>Error Definition</th></tr>
<tr><td>0</td><td>Invalid PNU</td></tr>
<tr><td>1</td><td>Parameter value unchangeable (This error also occurs when Pr.77=1)</td></tr>
<tr><td>2</td><td>Outside setting range</td></tr>
<tr><td>3</td><td>Invalid Sub-Index number</td></tr>
<tr><td>4</td><td>Without array</td></tr>
<tr><td>11</td><td>No parameter change right</td></tr>
<tr><td>18</td><td>Other error *</td></tr>
</table>
<table>
<tr><th colspan="2">* Error Definition</th></tr>
<tr><td>· Outside AK number range</td><td>· Write data error</td></tr>
<tr><td>· External operation error</td><td>· Without option error</td></tr>
<tr><td>· Instruction code error</td><td>· With STF error</td></tr>
<tr><td>· With STF error</td><td>· With operation mode specification error</td></tr>
<tr><td>· Outside AK number range</td><td>· Outside AK number range</td></tr>
<tr><td colspan="2">· Parameter calibration error (Pr. 900 and later)</td></tr>
<tr><td colspan="2">· Reset disabled error (per Pr. 75 reset input specification)</td></tr>
</table></td></tr>
<tr><td>16 to 31</td><td>Not used (0 is set)</td></tr>
</table>

Name			Bit	Definition
PZD	STW	—	0 to 2	Not used (1 is set)
		Control enable	3	0: Inverter output shutoff 1: Inverter output shutoff is cancelled
		—	4 to 6	Not used (1 is set)
		Fault reset (Reset)	7	[At inverter error] 0: No action 1: When *Pr. 349*=0, error reset can be made in any operation mode. When *Pr. 349*=1, error reset is enabled only in NET operation mode. [When inverter is normal] No action
		—	8 to 9	Not used (0 is set)
		PZD enable	10	0: Command request of PZD is not processed.*1 1: Command request of PZD is processed. · At power-on or inverter reset, set 1 once.
		STF signal	11	0: OFF 1: ON (forward rotation command)
		STR signal	12	0: OFF 1: ON (reverse rotation command)
		RT terminal	13	0: OFF 1: ON · Functions are changed according to the *Pr. 183* setting.
		MRS terminal	14	0: OFF 1: ON (output is shut off) · Functions are changed according to the *Pr.187* setting. However, do not change the factory-set value "6".
		RAM/ EEPROM	15	0: Set frequency (HSW) is written to RAM (Power-on reset returns the changed set frequency to the setting before it was written to RAM.). 1: Set frequency (HSW) is written to EEPROM.

*1 PZD enable and command count request can be executed.

Name			Bit	Definition
PZD	ZSW	—	0 to 2	Not used (1 is returned)
		Fault	3	0: Inverter normal 1: Inverter alarm occurrence
		—	4 to 5	Not used (1 is returned)
		Power-on inhibit	6	0 is returned
		Alarm	7	Command execution normal Command execution error
		—	8	Not used (0 is returned)
		Control request	9	1 is returned
		FU signal	10	0: OFF 1: ON (output frequency being detected) (Refer to *Pr. 42* and *Pr. 43* in the inverter manual.)
		RUN signal	11	0: OFF 1: ON (inverter running)
		FWD	12	0: Other than forward running (during stop, reverse running) 1: Forward running
		REW	13	0: Other than reverse running (during stop, forward running) 1: Reverse running
		Operation mode	14	0: Other than network operation mode 1: Network operation mode

<table>
<tr><th colspan="3">Name</th><th>Bit</th><th>Definition</th></tr>
<tr><td rowspan="3">PZD</td><td rowspan="2">ZSW</td><td>BUSY</td><td>15</td><td>0: Ready status
1: Busy status *
* If it takes time to perform slave side processing, slave side busy status is announced since reply to the master will be delayed. During busy status, other response data are unfixed values. When the slave side is busy, request from the master is invalid. Therefore, the same request must be sent again. The response data of the FR-A7NP during Busy status is as follows.
<table>
<tr><th></th><th>During Busy status and inverter reset</th><th>During Busy status and other than inverter rest</th></tr>
<tr><td>PKW</td><td>0</td><td>All 0 when AK=0
Reply data when AB ≠ 0</td></tr>
<tr><td>PZD</td><td>ZSW Bit15=1
Other error Bit=0</td><td>ZSW Bit15=1
Other error Bit=inverter status data</td></tr>
</table></td></tr>
<tr><td colspan="2">HSW</td><td>0 to 15</td><td>Set frequency (0.01 Hz increments)</td></tr>
<tr><td colspan="2">HIW</td><td>0 to 15</td><td>Output frequency (0.01 Hz increments) *
* When a value other than 9999 is set in Pr.430 Pulse monitor selection under position control (Pr.800 = 3, 4), pulse monitor is selected. (Refer to the inverter manual for pulse monitor.)</td></tr>
</table>

Name			Bit	Definition	
PZD	ECW	Terminal RH	0	High speed operation command*	Functions assigned to terminal RH, RM, RL, JOG, AU and CS are activated. *Signal names are initial values. Using *Pr.180 to Pr.182, Pr. 184 to Pr .186*, you can change output signal functions. Refer to the inverter manual (applied) for details of *Pr. 180 to Pr.182, Pr. 184 to Pr. 186*.
		Terminal RM	1	Middle-speed operation command*	
		Terminal RL	2	Low-speed operation command*	
		Terminal JOG	3	Jog operation command*	
		Terminal AU	4	Current input selection*	
		Terminal CS	5	Selection of automatic restart after instantaneous power failure*	
		—	6 to 7	Not used (0 is set)	
		Command count	8 to 15	Used by the master to recognize the command response.	
	ESW	SU signal	0	0: OFF 1: ON (up to frequency)	
		OL signal	1	0: OFF 1: ON (overload alarm)	
		IPF signal	2	0: OFF 1: ON (an instantaneous power failure or undervoltage occurs)	
		—	3 to 7	Not used (0 is set)	
		Command count	8 to 15	Echo back of the command request.	
	Reserved		0 to 15	Not used (0 is set, 0 is returned)	

CAUTION

Only when the contents of the command request (request for changing the inverter setting: PKW, HSW, STW/ECW) from the master changed, the inverter processes the request. If the contents of the command request are identical with those of the last request, the inverter does not process the request. (The received request is cleared.)

For instance, while the master keeps sending the "network operation mode enabled" command, changing the mode to the PU operation mode with switchover function does not allow the "network operation mode enabled" command to be executed due to the same contents as that sent last time. Therefore, the operation mode remains the PU operation mode without changing to the network operation mode.
In this case, send another command as "PU operation mode enabled" from the master once, then send the "network operation mode enabled" command again.

7.6 Outline of PNU

You can use the PNU to make inverter settings from the network.
The data used with the network is denoted PNU(P) to differentiate it from the parameter (Pr.).
This chapter explains the Module type "PPO type 1" to "PPO type 5".

CAUTION

Parameter definitions differ according to the Module type selected. When using "A5NP", refer to *page 72***.**

(1) PNU data definition

P1902.1
- Sub-Index Number — When the data type is "with array", the Sub-Index number is included in the PNU.
- PNU Number

(2) PNU data type
The PNU has the data types of "Array Unsigned 16"and "Unsigned 16".

Array Unsigned 16 :(AUs16) P1902.1 Sub-Index Number	With array
Unsigned 16 :(Us16) P1240	Without array

CAUTION

When the data type is "with array", include the Sub-Index number in the PNU.

7.7 Profibus PNU

7.7.1 Real-time monitor

The following items can be monitored from the master.

PNU	Item	Increments	Data Type
P1.1	Output frequency *9	0.01Hz	AUs16
P1.2	Output current	0.01A/ 0.1A *1	AUs16
P1.3	Output voltage	0.1V	AUs16
P1.5	Frequency setting	0.01Hz	AUs16
P1.6	Running speed	1r/min	AUs16
P1.7	Motor torque *2	0.1%	AUs16
P1.8	Converter output voltage	0.1V	AUs16
P1.9	Regenerative brake duty	0.1%	AUs16
P1.10	Electronic thermal relay function load factor	0.1%	AUs16
P1.11	Output current peak value	0.01A/ 0.1A *1	AUs16
P1.12	Converter output voltage peak value	0.1V	AUs16
P1.13	Input power	0.01kW/ 0.1kW *1	AUs16
P1.14	Output power	0.01kW/ 0.1kW *1	AUs16
P1.15	Input terminal status *4	—	AUs16
P1.16	Output terminal status *5	—	AUs16
P1.17	Load meter	0.1%	AUs16
P1.18	Motor excitation current *2	0.01A/ 0.1A *1	AUs16

PNU	Item	Increments	Data Type
P1.19	Position pulse *2, *3	—	AUs16
P1.20	Cumulative energization time	1h	AUs16
P1.22	Orientation status *2, *3	1	AUs16
P1.23	Actual operation time	1h	AUs16
P1.24	Motor load factor	0.1%	AUs16
P1.25	Cumulative power	1kWh	AUs16
P1.32	Torque command *2	0.1%	AUs16
P1.33	Torque current command *2	0.1%	AUs16
P1.34	Motor output *2	0.01kW/ 0.1kW *1	AUs16
P1.35	Feedback pulse *2, *3	—	AUs16
P1.50	Power saving effect	Differ according to Pr.	AUs16
P1.51	Cumulative saving power	Differ according to Pr.	AUs16
P1.52	PID set point	0.1%	AUs16
P1.53	PID measurement value	0.1%	AUs16
P1.54	PID deviation	0.1%	AUs16
P1.58	Option input terminal status1 *2, *6	—	AUs16
P1.59	Option input terminal status2 *2, *7	—	AUs16
P1.60	Option output terminal status *2, *8	—	AUs16

*1 The setting depends on the inverter capacity. (55K or less / 75K or more)
(The inverter type, 55K and 75K differ according to -NA and -EC versions. Refer to *page 1*.)

*2 These items can be monitored with the FR-A700 series only.

*3 Available only when the FR-A7AP is mounted.

*4 Input terminal monitor details

b15															b0
—	—	—	—	CS	RES	STOP	MRS	JOG	RH	RM	RL	RT	AU	STR	STF

Functions of each terminal are assigned using *Pr.178* to *Pr.189*. *(Refer to the inverter manual for details)*

*5 Output terminal monitor details

b15															b0
—	—	—	—	—	—	—	—	—	ABC2	ABC1	FU	OL	IPF	SU	RUN

Functions of each terminal are assigned using *Pr.190* to *Pr.196*. *(Refer to the inverter manual for details)*

*6 Details of option input terminal monitor 1 (input terminal status of FR-A7AX)
— all terminals are off when an option is not fitted.

b15															b0
X15	X14	X13	X12	X11	X10	X9	X8	X7	X6	X5	X4	X3	X2	X1	X0

*7 Details of option input terminal monitor 2 (input terminal status of FR-A7AX)
— all terminals are off when an option is not fitted.

b15															b0
—	—	—	—	—	—	—	—	—	—	—	—	—	—	—	DY

*8 Details of option output terminal monitor (output terminal status of FR-A7AY/A7AR)
— all terminals are off when an option is not fitted.

b15															b0
—	—	—	—	—	—	RA3	RA2	RA1	Y6	Y5	Y4	Y3	Y2	Y1	Y0

*9 When a value other than 9999 is set in *Pr.430 Pulse monitor selection* under position control (*Pr.800* = 3, 4), pulse monitor is selected. *(Refer to the inverter manual for pulse monitor.)*

7.7.2 Parameter clear

Parameter clear can be performed from the master.

PNU	Item	Data Definition	Data Type
P2.2	Parameter clear	965AH	AUs16
P2.3	All parameter clear	99AAH	AUs16
P2.5	Parameter clear *1	5A96H	AUs16
P2.6	All parameter clear *1	AA99H	AUs16
P2.8	Error history clear	0000H	AUs16

*1 Communication parameters *(Pr. 117 to Pr. 124, Pr. 331 to Pr. 341, Pr. 343, Pr. 349, Pr. 549 to Pr. 551)* are not cleared.

7.7.3 Operation mode read/write

Read/write of the operation mode can be performed from the master.

PNU	Item	Data Definition	Data Type
P3	Operation mode read/write	External operation mode:10 H PU operation mode: 11H (*Pr.79*="6") Network operation mode:14H	Us16

7.7.4 Set frequency read

The frequency set to the inverter can be read from the master.

PNU	Item	Data Definition	Data Type
P4.1	Set frequency (RAM) read	Set frequency (RAM) is read.	AUs16
P4.2	Set frequency (EEPROM) read	Set frequency (EEPROM) is read.	AUs16

7.7.5 Terminal input read

Analog input value of terminal 2, 4, 1 can be read.

PNU	Item	Data Definition	Data Type
P5.1	Terminal 2 input value read	Terminal 2 input value (%) is read.	AUs16
P5.2	Terminal 4 input value read	Terminal 4 input value (%) is read.	AUs16
P5.3	Terminal 1 input value read	Terminal 1 input value (%) is read.	AUs16

7.7.6 Inverter reset

The inverter can be reset from the master.

PNU	Item	Data Definition	Data Type
P6	Inverter reset	The inverter is reset after the data was written from the master.	Us16

- The inverter maintains the resetting status while reset is requested.
- When $Pr.75 \neq$ "0, 2, 14, 16", reset is enabled only during an inverter error.

7.7.7 Node address read

The node address of the inverter can be read.

PNU	Item	Data Definition	Data Type
P918	Node address read	Set node address is read.	Us16

7.7.8 Alarm definition read

(1) Alarm definitions of past eight alarms occurred in the inverter can be read. *(refer to page 57 for error number)*

PNU	Item	Data Definition	Data Type
P947.1 to P947.8	Latest alarm is read	P947.1 :error number P947.2 to P947.8 :all 0	AUs16
P947.9 to P947.16	Second alarm in past is read	P947.9 :error number P947.10 to P947.16 :all 0	AUs16
P947.17 to P947.24	Third alarm in past is read	P947.17 :error number P947.18 to P947.24 :all 0	AUs16
P947.25 to P947.32	Forth alarm in past is read	P947.25 :error number P947.26 to P947.32 :all 0	AUs16
P947.33 to P947.40	Fifth alarm in past is read	P947.33 :error number P947.34 to P947.40 :all 0	AUs16
P947.41 to P947.48	Sixth alarm in past is read	P947.41 :error number P947.42 to P947.48 :all 0	AUs16
P947.49 to P947.56	Seventh alarm in past is read	P947.49 :error number P947.50 to P947.56 :all 0	AUs16
P947.57 to P947.64	Eighth alarm in past is read	P947.57 :error number P947.58 to P947.64 :all 0	AUs16

<Alarm data>

Error Number	Definition	Error Number	Definition	Error Number	Definition
00H	No fault present	91H	E.PTC	D2H	E.ECT *2
10H	E.OC1	A0H	E.OPT	D3H	E.OD *2
11H	E.OC2	A1H	E.OP1	D5H	E.MB1 *1
12H	E.OC3	A3H	E.OP3 *1	D6H	E.MB2 *1
20H	E.OV1	B0H	E.PE	D7H	E.MB3 *1
21H	E.OV2	B1H	E.PUE	D8H	E.MB4 *1
22H	E.OV3	B2H	E.RET	D9H	E.MB5 *1
30H	E.THT	B3H	E.PE2	DAH	E.MB6 *1
31H	E.THM	C0H	E.CPU	DBH	E.MB7 *1
40H	E.FIN	C1H	E.CTE	DCH	E.EP *2
50H	E.IPF	C2H	E.P24	F1H	E. 1
51H	E.UVT	C4H	CDO	F2H	E. 2 *1
52H	E.ILF	C5H	IOH	F3H	E. 3 *1
60H	E.OLT	C6H	SER	F6H	E. 6
70H	E.BE	C7H	AIE	F7H	E. 7
80H	E.GF	C8H	E.USB *1	FBH	E. 11 *1
81H	E.LF	D0H	E.OS *2	FDH	E. 13
90H	E.OHT	D1H	E.OSD *2		

*1 Displayed only for the FR-A700 series.
*2 Appears when the FR-A7AP (option) is fitted.

Refer to *the inverter manual for details of alarm definitions*.

(2) Energization time (fault monitor) for past eight alarms at the inverter alarm occurrence can be read.

PNU	Item	Data Definition	Data Type
P948.1 to P948.8	Latest fault monitor energization time read	P948.1 :energization time P948.2 to P948.8 :all 0	AUs16
P948.9 to P948.16	Energization time of second fault monitor in past read	P948.9 :energization time P948.10 to P948.16 :all 0	AUs16
P948.17 to P948.24	Energization time of third fault monitor in past read	P948.17 :energization time P948.18 to P948.24 :all 0	AUs16
P948.25 to P948.32	Energization time of forth fault monitor in past read	P948.25 :energization time P948.26 to P948.32 :all 0	AUs16
P948.33 to P948.40	Energization time of fifth fault monitor in past read	P948.33 :energization time P948.34 to P948.40 :all 0	AUs16
P948.41 to P948.48	Energization time of sixth fault monitor in past read	P948.41 :energization time P948.42 to P948.48 :all 0	AUs16
P948.49 to P948.56	Energization time of seventh fault monitor in past read	P948.49 :energization time P948.50 to P948.56 :all 0	AUs16
P948.57 to P948.64	Energization time of eighth fault monitor in past read	P948.57 :energization time P948.58 to P948.64 :all 0	AUs16

(3) Output frequency, output current and output voltage for past eight alarms at the inverter alarm occurrence can be read.

PNU	Item	Data Definition	Data Type
P949.1 to P949.8	Latest fault monitor frequency, current and voltage read	P949.1 :output frequency P949.2 :output current P949.3 :output voltage P949.4 to P949.8 :all 0	AUs16
P949.9 to P949.16	Second fault monitor frequency, current and voltage in past read	P949.9 :output frequency P949.10 :output current P949.11 :output voltage P949.12 to P949.16 :all 0	AUs16
P949.17 to P949.24	Third fault monitor frequency, current and voltage in past read	P949.17 :output frequency P949.18 :output current P949.19 :output voltage P949.20 to P949.24 :all 0	AUs16
P949.25 to P949.32	Forth fault monitor frequency, current and voltage in past read	P949.25 :output frequency P949.26 :output current P949.27 :output voltage P949.28 to P949.32 :all 0	AUs16
P949.33 to P949.40	Fifth fault monitor frequency, current and voltage in past read	P949.33 :output frequency P949.34 :output current P949.35 :output voltage P949.36 to P949.40 :all 0	AUs16
P949.41 to P949.48	Sixth fault monitor frequency, current and voltage in past read	P949.41 :output frequency P949.42 :output current P949.43 :output voltage P949.44 to P949.48 :all 0	AUs16
P949.49 to P949.56	Seventh fault monitor frequency, current and voltage in past read	P949.49 :output frequency P949.50 :output current P949.51 :output voltage P949.52 to P949.56 :all 0	AUs16
P949.57 to P949.64	Eighth fault monitor frequency, current and voltage in past read	P949.57 :output frequency P949.58 :output current P949.59 :output voltage P949.60 to P949.64 :all 0	AUs16

7.7.9 PNU list read

The usable PNU numbers can be read.

PNU	Item	Data Definition	Data Type
P980.1 to 116 P981.1 to 116 P982.1 to 116 P983.1 to 116 P984.1 to 116 P985.1 to 116 P986.1 to 116 P987.1 to 116 P988.1 to 116 P989.1 to 116	PNU list read	Usable PNU numbers are read in sorted status.	AUs16

PNU list read example

PNU	Usable PNU number	REMARKS
P980.1	1	Inverter command parameter
P980.2	2	
P980.3	3	
⋮	⋮	
P980.116	1000	Inverter standard parameter
P981.1	1001	
P981.2	1002	
⋮	⋮	
P982.111	0*1	

*1 When 0 is stored, read is terminated.

7.8 Standard Parameters

You can use the PNU to make parameter settings from the network.
The table below lists PNU numbers corresponding to parameter numbers.
Standard parameter examples are introduced below. Refer to the examples and make parameter settings.
Refer to the inverter manual for details of the parameters.

Representation of the PNU for standard parameters (Example: *Pr.902*)

P1902.1
- Sub-Index Number
- 1000+Parameter Number

Example of parameter list

Parameter Number	PNU	Name	Minimum Setting Increments	Setting Range		Data Type
				Decimal	Hexadecimal	
0	P1000	Torque boost	0.1%	0 to 30	0 to 12C	Us16
1	P1001	Maximum frequency	0.01Hz	0 to 120	0 to 2EE0	Us16
2	P1002	Minimum frequency	0.01Hz	0 to 120	0 to 2EE0	Us16
3	P1003	Base Frequency	0.01Hz	0 to 400	0 to 9C40	Us16
4	P1004	Multi-speed setting (high speed)	0.01Hz	0 to 400	0 to 9C40	Us16
5	P1005	Multi-speed setting (middle speed)	0.01Hz	0 to 400	0 to 9C40	Us16
6	P1006	Multi-speed setting (low speed)	0.01Hz	0 to 400	0 to 9C40	Us16
⋮	⋮	⋮	⋮	⋮	⋮	⋮

CAUTION

Write to *Pr. 77* and *Pr. 79* is not allowed from the network with the FR-A7NP. (Read is allowed.)

The following parameters require the Sub-Index number for the PNU.

Parameter Number	PNU	Name	Minimum Setting Increments	Setting Range		Data Type
				Decimal	Hexadecimal	
900	P1900.1	FM terminal calibration	—	—	—	AUs16
901	P1901.1	AM terminal calibration *2	—	—	—	AUs16
902	P1902.1	Terminal 2 frequency setting bias frequency	0.01Hz	0 to 400	0 to 9C40	AUs16
	P1902.2	Terminal 2 frequency setting bias	0.1%	0 to 300	0 to BB8	AUs16
903	P1903.1	Terminal 2 frequency setting gain frequency	0.01Hz	0 to 400	0 to 9C40	AUs16
	P1903.2	Terminal 2 frequency setting gain	0.1%	0 to 300	0 to BB8	AUs16
904	P1904.1	Terminal 4 frequency setting bias frequency	0.01Hz	0 to 400	0 to 9C40	AUs16
	P1904.2	Terminal 4 frequency setting bias	0.1%	0 to 300	0 to BB8	AUs16
905	P1905.1	Terminal 4 frequency setting gain frequency	0.01Hz	0 to 400	0 to 9C40	AUs16
	P1905.2	Terminal 4 frequency setting gain	0.1%	0 to 300	0 to BB8	AUs16
917 *1	P1917.1	Terminal 1 bias frequency (speed)	0.01Hz	0 to 400	0 to 9C40	AUs16
	P1917.2	Terminal 1 bias (speed)	0.1%	0 to 300	0 to BB8	AUs16
918 *1	P1918.1	Terminal 1 gain frequency (speed)	0.01Hz	0 to 400	0 to 9C40	AUs16
	P1918.2	Terminal 1 gain (speed)	0.1%	0 to 300	0 to BB8	AUs16
919 *1	P1919.1	Terminal 1 bias command (torque/magnetic flux)	0.1%	0 to 400	0 to 9C40	AUs16
	P1919.2	Terminal 1 bias (torque/magnetic flux)	0.1%	0 to 300	0 to BB8	AUs16
920 *1	P1920.1	Terminal 1 gain command (torque/magnetic flux)	0.1%	0 to 400	0 to 9C40	AUs16
	P1920.2	Terminal 1 gain (torque/magnetic flux)	0.1%	0 to 300	0 to BB8	AUs16
930 *3	P1930.1	Current output bias signal	0.1%	0 to 100	0 to 3E8	AUs16
	P1930.2	Current output bias current	0.1%	0 to 100	0 to 3E8	AUs16
931 *3	P1931.1	Current output gain signal	0.1%	0 to 100	0 to 3E8	AUs16
	P1931.2	Current output gain current	0.1%	0 to 100	0 to 3E8	AUs16
932 *1	P1932.1	Terminal 4 bias command (torque/magnetic flux)	0.1%	0 to 400	0 to 9C40	AUs16
	P1932.2	Terminal 4 bias (torque/magnetic flux)	0.1%	0 to 300	0 to BB8	AUs16
933 *1	P1933.1	Terminal 4 gain command (torque/magnetic flux)	0.1%	0 to 400	0 to 9C40	AUs16
	P1933.2	Terminal 4 gain (torque/magnetic flux)	0.1%	0 to 300	0 to BB8	AUs16

*1 These parameters can be set for the FR-A700 series only.
*2 For the NA (FR-F700 series), EC and CH version, the terminal name is CA terminal calibration.
*3 These parameters can be set for the NA (FR-F700 series), EC and CH version only.

8 PPO TYPE NON SUPPORT SPECIFICATION

8.1 Profibus Profiles

The option unit operates as a "slave of the Profibus DP master" or a "controller equivalent to Profibus DP master class 1 on an RS-485 network".
The Profibus profile (data buffer) can be selected from among six different types, "PPO type1" to "PPO type5", "A5NP".
This chapter explains the Module type "A5NP" profile. For the Module type "PPO type1" to "PPO type5" profiles, refer to page *40*.
Module type is changed with the slave module setting. For details, refer to the instruction manual of the Network Master Configuration Software.

REMARKS

The "A5NP" profile is compatible with the FR-A5NP profile.
Use "A5NP" profile when replacing the FR-A5NP with FR-A7NP, etc.

The configuration of the "A5NP" is as follows.

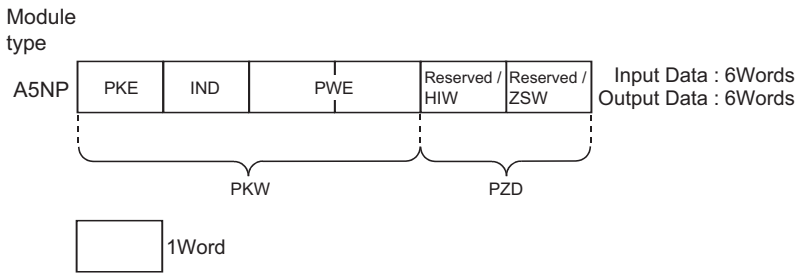

8.2 ID definitions

ID		Definition
PKW	PKE	PNU number (PNU) and task or response Id (AK)
	IND	Index number
	PWE	Set 0 since high bits (Bits 16 to 31) are not used. Lower (Bits 16 to 31): Parameter value
PZD	ZSW	Bits 0 to 7: Inverter status (Command response) Bits 8 to 14: Command count (command request/response)
	HIW	Reserved area for extension

*Command request:Message from the master to the slave
Command response:Message from the slave to the master

8.3 Buffer memory map

The following shows the buffer memory map of the A5NP Profibus profiles.

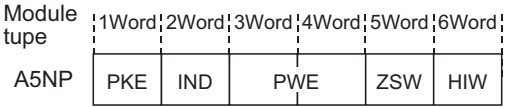

8.4 Buffer Memory Configuration

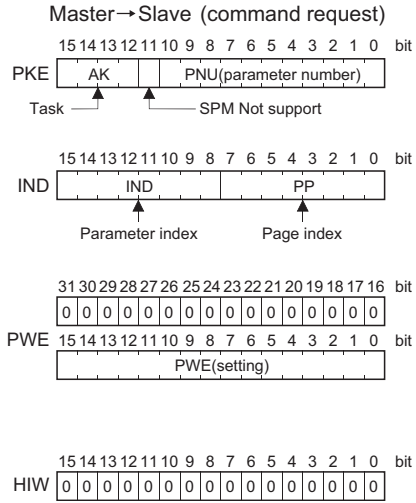

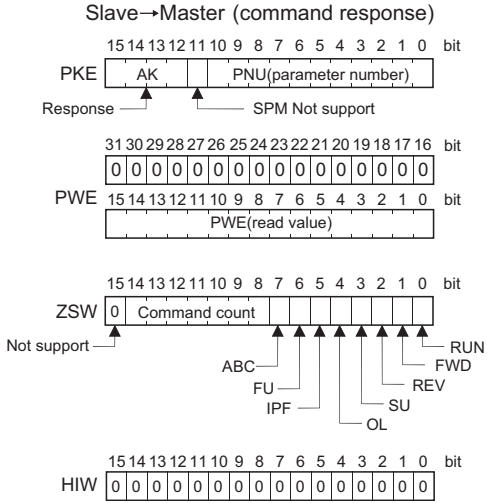

For buffer memory details, refer to *page 67*.

8.5 Buffer Memory Details

The following indicates the buffer memory details of the Profibus profiles.

Name			Bit	Definition
PKW	PKE	PNU	0 to 10	PNU number (Together, the PNU and the IND define which data word is being accessed.)
		PNU number	11	Not used (0 is set)
		AK	12 to 15	[Command request] 0 : No task 1 : Parameter value is requested (read request) 2 : Parameter value (word) is changed (write request) 3 to 15: Non-supported [Command response] 0 : No response (Busy status) 1 : Inverter can accept data (Ready status) 2 to 6 : Not-used 7 : Command execution error (error number is stored into PWE) 8 : No operation change rights 9 to 15: Not used

Name			Bit	Definition
PKW	IND	PP	0 to 7	Page Index : If IND = 01 (system environment variables(sev)), the PP values specify different blocks of sev's: PP = 0 : sev_I, block I PP = 1 : sev_II, block II (alarm history) PP = 2 : sev_III, block III (For details, refer to *page 75*.) If IND is other than 01, set PP to 0.
		IND	8 to 15	Parameter Index : Specifies the area from which Parameter Number (PNU) is being accessed. (For details, refer to *page 73*.) IND = 0: real-time monitor area IND = 1: system environment variable area (3 blocks) IND = 2: normal parameter area IND = 3: *Pr. 900* to frequency parameter area IND = 4: *Pr. 900* to frequency parameter area

<table>
<tr><th colspan="2">Name</th><th>Bit</th><th>Definition</th></tr>
<tr><td rowspan="2">PKW</td><td rowspan="2">PWE</td><td>0 to 15</td><td>PNU read value/write value
When command response AK = 7 (command execution error), PWE definition is as follows.
<table>
<tr><th>PNU</th><th>Error Definition</th></tr>
<tr><td>0H</td><td>Without error</td></tr>
<tr><td>1H</td><td>Unsupported task (includs writing)</td></tr>
<tr><td>2H</td><td>Invalid Index (IND)</td></tr>
<tr><td>3H</td><td>Invalid PNU</td></tr>
<tr><td>6H</td><td>Invalid page index (PP)</td></tr>
<tr><td>41H</td><td>Mode error</td></tr>
<tr><td>42H</td><td>Instruction code error</td></tr>
<tr><td>43H</td><td>Data setting range error</td></tr>
</table></td></tr>
<tr><td>16 to 31</td><td>Not used (0 is set)</td></tr>
</table>

Name			Bit	Definition	
PZD	ZSW	RUN signal	0	0 : OFF 1 : ON (inverter running)	For master-to-slave messages (command request), bits 0 to 7 are not used and must be set to 0. The bit-wise data here do not reflect *Pr.190 to Pr. 196* (output terminal function selection). At command response, signals are the same. Signals are not affected by settings of *Pr.190 to Pr.196* (output terminal function selection).
		FWD signal	1	0 : OFF 1 : ON (forward rotation operation being performed)	
		REV signal	2	0 : OFF 1 : ON (reverse rotation operation being performed)	
		SU signal	3	0 : OFF 1 : ON (up to frequency)	
		OL signal	4	0 : OFF 1 : ON (overload alarm)	
		IPF signal	5	0 : OFF 1 : ON (an instantaneous power failure or undervoltage occurs)	
		FU signal	6	0 : OFF 1 : ON (output frequency being detected)	
		ABC signal	7	0 : Inverter normal 1 : Inverter alarm occurrence	
		Command count	8 to 14	Command count The command count is an optional feature maintained by the Profibus master and can range from 00H to 7FH. The option unit copies the command count from the command it receives to the same byte offset in the response it sends. The master may use this to synchronize commands and responses.	
		—	15	Not used (0 is set)	
	HIW		0 to 15	Not used (0 is set)	

CAUTION

Only when the contents of the command request (request for changing the inverter setting: PKW) from the master changed, the inverter processes the request. If the contents of the command request are identical with those of the last request, the inverter does not process the request. (The received request is cleared.)

For instance, while the master keeps sending the "network operation mode enabled" command, changing the mode to the PU operation mode with switchover function does not allow the "network operation mode enabled" command to be executed due to the same contents as that sent last time. Therefore, the operation mode remains the PU operation mode without changing to the network operation mode.
In this case, send another command as "PU operation mode enabled" from the master once, then send the "network operation mode enabled" command again.

8.6 Outline of PNU

You can use the PNU to make inverter settings from the network.
The data used with the network is denoted PNU(P) to differentiate it from the parameter (Pr.).
This chapter explains the Module type "A5NP".

CAUTION

Parameter definitions differ according to the Module type selected. When using "PPO type1" to "PPO type5", refer to *page 51***.**

8.7 Profibus PNU (Module Type A5NP)

8.7.1 Real time monitor area (IND=0000H (IND=00H, PP=00H))

The following items can be monitored from the master.

IND	PNU	Item	Increments
0000H	0H	Output frequency *9	0.01Hz
0000H	1H	Output current	0.01A/0.1A *3
0000H	2H	Output voltage	0.1V
0000H	4H	Frequency setting	0.01Hz
0000H	5H	Running speed	1r/min
0000H	6H	Motor torque *1	0.1%
0000H	7H	Converter output voltage	0.1V
0000H	8H	Regenerative brake duty	0.1%
0000H	9H	Electronic thermal relay function load factor	0.1%
0000H	AH	Output current peak value	0.01A/0.1A *3
0000H	BH	Converter output voltage peak value	0.1V
0000H	CH	Input power	0.01kW/ 0.1kW *3
0000H	DH	Output power	0.01kW/ 0.1kW *3
0000H	EH	Input terminal status *4	—
0000H	FH	Output terminal status *5	—
0000H	10H	Load meter	0.1%
0000H	11H	Motor excitation current *1	0.01A/0.1A *3
0000H	12H	Position pulse *1, *2	—
0000H	13H	Cumulative energization time	1Hr

IND	PNU	Item	Increments
0000H	15H	Orientation status *1, *2	1
0000H	16H	Actual operation time	1Hr
0000H	17H	Motor load factor	0.1%
0000H	18H	Cumulative power	0.01kWh
0000H	1FH	Torque command *1	0.1%
0000H	20H	Torque current command *1	0.1%
0000H	21H	Motor output *1	0.01kW/ 0.1kW *3
0000H	22H	Feedback pulse *1, *2	—
0000H	31H	Power saving effect	Differ according to Pr.
0000H	32H	Cumulative saving power	Differ according to Pr.
0000H	33H	PID set point	0.1%
0000H	34H	PID measured value	0.1%
0000H	35H	PID deviation	0.1%
0000H	39H	Option input terminal status1 *1, *6	—
0000H	3AH	Option input terminal status2 *1, *7	—
0000H	3BH	Option output terminal status *1, *8	—

*1 These items can be monitored with the FR-A700 series only.
*2 Available only when the FR-A7AP is mounted.
*3 The setting depends on the inverter capacity. (55K or less / 75K or more)
(The inverter type, 55K and 75K differ according to -NA and -EC versions. Refer to *page 1*.)
*4 Input terminal monitor details

b15															b0
—	—	—	—	CS	RES	STOP	MRS	JOG	RH	RM	RL	RT	AU	STR	STF

*5 Output terminal monitor details

b15															b0
—	—	—	—	—	—	—	—	—	ABC2	ABC1	FU	OL	IPF	SU	RUN

*6 Details of option input terminal monitor 1 (input terminal status of FR-A7AX)
— all terminals are off when an option is not fitted.

b15															b0
X15	X14	X13	X12	X11	X10	X9	X8	X7	X6	X5	X4	X3	X2	X1	X0

*7 Details of option input terminal monitor 2 (input terminal status of FR-A7AX)
— all terminals are off when an option is not fitted.

b15															b0
—	—	—	—	—	—	—	—	—	—	—	—	—	—	—	DY

*8 Details of option output terminal monitor (output terminal status of FR-A7AY/A7AR)
— all terminals are off when an option is not fitted.

b15															b0
—	—	—	—	—	—	RA3	RA2	RA1	Y6	Y5	Y4	Y3	Y2	Y1	Y0

*9 When a value other than 9999 is set in *Pr.430 Pulse monitor selection* under position control (*Pr.800* = 3, 4), pulse monitor is selected. *(Refer to the inverter manual for pulse monitor.)*

8.7.2 System environment variable (sev) area (IND = 01PPH (IND = 01H, PP = 00H, 01H))

SEV Interface (IND = 01H, PP = 00H, SEV_I, Block I)

(1) Parameter clear

Parameter clear can be performed from the master.

IND	PNU	Item	Data Definition
0100H	1H	Inverter reset	
0100H	2H	Parameter clear	WriteVal = 965AH
0100H	3H	All parameter clear	WriteVal = 99AAH
0100H	5H	Parameter clear *1	WriteVal = 5A96H
0100H	6H	All parameter clear *1	WriteVal = AA99H

*1 Communication parameters *(Pr. 117 to Pr. 124, Pr. 331 to Pr.341, Pr.343, Pr. 349, Pr.549 to Pr.551)* are not cleared.

(2) Inverter status/operation command

The inverter status can be monitored and operation command can be given from the master.

<table>
<tr><th>IND</th><th>PNU</th><th>Item</th></tr>
<tr><td rowspan="2">0100H</td><td rowspan="2">AH</td><td>Inverter status
Refer to page 70 for details.</td></tr>
<tr><td>Run command
<table>
<tr><th>Name</th><th>Bit</th><th colspan="2">Definition</th></tr>
<tr><td>—</td><td>0</td><td colspan="2">Reserved (0 is set)</td></tr>
<tr><td>Terminal STF</td><td>1</td><td>Forward rotation command</td><td rowspan="10">Functions assigned to terminal RH, RM, RL, JOG, RT, AU, CS and MRS are activated.
*Signal names are initial values. Using Pr. 180 to Pr .187, you can change output signal functions. Refer to the inverter manual (applied) for details of Pr. 180 to Pr.187.</td></tr>
<tr><td>Terminal STR</td><td>2</td><td>Reverse rotation command</td></tr>
<tr><td>Terminal RH</td><td>3</td><td>High-speed operation command *</td></tr>
<tr><td>Terminal RM</td><td>4</td><td>Middle-speed operation command *</td></tr>
<tr><td>Terminal RL</td><td>5</td><td>Low-speed operation command *</td></tr>
<tr><td>Terminal JOG</td><td>6</td><td>JOG operation selection *</td></tr>
<tr><td>Terminal RT</td><td>7</td><td>Second function selection *</td></tr>
<tr><td>Terminal AU</td><td>8</td><td>Terminal 4 input selection *</td></tr>
<tr><td>Terminal CS</td><td>9</td><td>Restart after instantaneopus power failure selection *</td></tr>
<tr><td>Terminal MRS</td><td>10</td><td>Inverter output shut off *</td></tr>
<tr><td>—</td><td>11 to 15</td><td colspan="2">Not used (0 is set)</td></tr>
</table></td></tr>
</table>

(3) Operation mode write

Write of the operation mode can be performed from the master.

IND	PNU	Item	Data Definition
0100H	BH	Operation mode	External operation mode:10H PU operation mode:11H (When *Pr.79* = "6") Network operation mode:14H

(4) Set frequency read/write

The frequency set to the inverter can be read/written from the master.

IND	PNU	Item	Data Definition
0100H	DH	Set frequency (RAM) *1	Set frequency (RAM) is read or written.
0100H	EH	Set frequency (EEPROM) *1,2	Write set frequency to EEPROM.

*1 Writing to PNU = DH or PNU = EH can be read out from PNU = DH.

*2 To change the running frequency consecutively, always write data to the inverter RAM.

(5) Terminal input read

The analog input values of terminal 2, 4, 1 can be read.

IND	PNU	Name	Minimum Setting Increments
0100H	1H	Terminal 2 input value read	0.1%
0100H	2H	Terminal 4 input value read	0.1%
0100H	3H	Terminal 1 input value read	0.1%

Alarm History (IND = 01H, PP = 01H, SEV_II, Block II)

The past eight inverter alarm definitions can be read.

IND	PNU	Item
0101H	0H	Latest alarm *1
0101H	1H	Second alarm in past is read
0101H	2H	Third alarm in past is read
0101H	3H	Forth alarm in past is read

IND	PNU	Item
0101H	4H	Fifth alarm in past is read
0101H	5H	Sixth alarm in past is read
0101H	6H	Seventh alarm in past is read
0101H	7H	Eighth alarm in past is read

*1 Writing a value of 0000H to this parameter resets all alarm history. All other parameters at this index are read only.

<Alarm data>

Error Number	Definition
00H	No fault present
10H	E.OC1
11H	E.OC2
12H	E.OC3
20H	E.OV1
21H	E.OV2
22H	E.OV3
30H	E.THT
31H	E.THM
40H	E.FIN
50H	E.IPF
51H	E.UVT
52H	E.ILF

Error Number	Definition
60H	E.OLT
70H	E.BE
80H	E.GF
81H	E.LF
90H	E.OHT
91H	E.PTC
A0H	E.OPT
A1H	E.OP1
A3H	E.OP3 *1
B0H	E.PE
B1H	E.PUE
B2H	E.RET
B3H	E.PE2
C0H	E.CPU

Error Number	Definition
C1H	E.CTE
C2H	E.P24
C4H	CDO
C5H	IOH
C6H	SER
C7H	AIE
C8H	E.USB *1
D0H	E.OS *2
D1H	E.OSD *2
D2H	E.ECT *2
D3H	E.OD *2
D5H	E.MB1 *1
D6H	E.MB2 *1
D7H	E.MB3 *1

Error Number	Definition
D8H	E.MB4 *1
D9H	E.MB5 *1
DAH	E.MB6 *1
DBH	E.MB7 *1
DCH	E.EP *2
F1H	E. 1
F2H	E. 2 *1
F3H	E. 3 *1
F6H	E. 6
F7H	E. 7
FBH	E. 11 *1
FDH	E. 13

*1 Displayed only for the FR-A700 series.
*2 Appears when the FR-A7AP (option) is fitted.

Refer to *the inverter manual for details of alarm definitions*.

8.8 Standard Parameters

8.8.1 Normal parameter area (IND = 0200H (IND = 02H, PP = 00H))

You can use the PNU to make parameter settings from the network.
The table below lists PNU numbers corresponding to parameter numbers.
Standard parameter examples are introduced below. Refer to the examples and make parameter settings.
Refer to the inverter manual for details of the parameters.

Example of parameter list

IND	PNU	Parameter Number	Name	Minimum Setting Increments	Setting Range	
					Decimal	Hexadecimal
0200H	0H	0	Torque boost	0.1%	0 to 30	0 to 12C
	1H	1	Maximum frequency	0.01Hz	0 to 120	0 to 2EE0
	2H	2	Minimum frequency	0.01Hz	0 to 120	0 to 2EE0
	3H	3	Base Frequency	0.01Hz	0 to 400	0 to 9C40
	4H	4	Multi-speed setting (high speed)	0.01Hz	0 to 400	0 to 9C40
	5H	5	Multi-speed setting (middle speed)	0.01Hz	0 to 400	0 to 9C40
	6H	6	Multi-speed setting (low speed)	0.01Hz	0 to 400	0 to 9C40
	⋮	⋮	⋮	⋮	⋮	⋮

CAUTION

Write to *Pr. 77* and *Pr. 79* is not allowed from the network with the FR-A7NP. (Read is allowed.)

8.8.2 Pr. 900 to calibration parameter (frequency) area (IND=0300H (IND=03H, PP=00H))

The following parameters can be set with IND=0300H.

IND	PNU	Parameter Number	Name	Minimum Setting Increments	Setting Range	
					Decimal	Hexadecimal
0300H	0H	900	FM terminal calibration	1	0 to 8191	0 to 1FFF
0300H	1H	901	AM terminal calibration *2	1	0 to 8191	0 to 1FFF
0300H	2H	902	Terminal 2 frequency setting bias frequency	0.01Hz	0 to 400	0 to 9C40
0300H	3H	903	Terminal 2 frequency setting gain frequency	0.01Hz	0 to 400	0 to 9C40
0300H	4H	904	Terminal 4 frequency setting bias frequency	0.01Hz	0 to 400	0 to 9C40
0300H	5H	905	Terminal 4 frequency setting gain frequency	0.01Hz	0 to 400	0 to 9C40
0300H	11H	917 *1	Terminal 1 bias frequency (speed)	0.01Hz	0 to 400	0 to 9C40
0300H	12H	918 *1	Terminal 1 gain frequency (speed)	0.01Hz	0 to 400	0 to 9C40
0300H	13H	919 *1	Terminal 1 bias command (torque/magnetic flux)	0.1%	0 to 300	0 to BB8
0300H	14H	920 *1	Terminal 1 gain command (torque/magnetic flux)	0.1%	0 to 300	0 to BB8
0300H	1EH	930 *3	Current output bias signal	0.1%	0 to 100	0 to 3E8
0300H	1FH	931 *3	Current output gain signal	0.1%	0 to 100	0 to 3E8
0300H	20H	932 *1	Terminal 4 bias command (torque/magnetic flux)	0.1%	0 to 300	0 to BB8
0300H	21H	933 *1	Terminal 4 gain command (torque/magnetic flux)	0.1%	0 to 300	0 to BB8

*1 These parameters can be set for the FR-A700 series only.
*2 For the NA (FR-F700 series), EC and CH version, the terminal name is CA terminal calibration.
*3 These parameters can be set for the NA (FR-F700 series), EC and CH version only.

8.8.3 Pr. 900 to calibration parameter (%) area (IND=0400H (IND=04H, PP=00H))

The following parameters can be set with IND=0400H.

IND	PNU	Parameter Number	Name	Minimum Setting Increments
0400H	2H	902	Terminal 2 frequency setting bias	0.1%
0400H	3H	903	Terminal 2 frequency setting gain	0.1%
0400H	4H	904	Terminal 4 frequency setting bias	0.1%
0400H	5H	905	Terminal 4 frequency setting gain	0.1%
0400H	11H	917 *1	Terminal 1 bias (speed)	0.1%
0400H	12H	918 *1	Terminal 1 gain (speed)	0.1%
0400H	13H	919 *1	Terminal 1 bias (torque/magnetic flux)	0.1%
0400H	14H	920 *1	Terminal 1 gain (torque/magnetic flux)	0.1%
0400H	1EH	930 *2	Current output bias current	0.1%
0400H	1FH	931 *2	Current output gain current	0.1%
0400H	20H	932 *1	Terminal 4 bias (torque/magnetic flux)	0.1%
0400H	1FH	933 *1	Terminal 4 gain (torque/magnetic flux)	0.1%

*1 These parameters can be set for the FR-A700 series only.
*2 These parameters can be set for the NA (FR-F700 series), EC and CH version only.

9 TROUBLESHOOTING

If an alarm occurred in the inverter and the inverter and option unit do not function, refer to the following check points, find the cause from the operation panel indication of the inverter and the LED status of the option unit, and take an adequate action. If any of the causes does not apply to the alarm, a failure may have occurred. In that case, contact your sales representative.

Operation Panel Indication	Option Unit LED Status	Assumed Cause	Check Point
0.00	Off	Option unit does not function	Make sure that the option is fitted properly.
			Reset the inverter.
			Perform parameter all clear to return the parameters to the factory settings, and switch power off once, then on again.
		Network is instable	Make sure that the network cables between the nodes are connected properly.
			Make sure that the network cables are terminated.
			Check the network setting from the Profibus-DP Network Configuration Software.
			Check the other nodes for a network error.
		Network master does not exist or does not function properly	Check the connection and operation of the Profibus-DP master.
E.***	Red is lit	Inverter in error	Refer to the inverter manual.

* The error code of the inverter enters.

REVISIONS

*The manual number is given on the bottom left of the back cover.

Print Date	*Manual Number	Revision
Nov., 2004	IB(NA)-0600214ENG-A	First edition
Oct., 2005	IB(NA)-0600214ENG-B	Additions Compatible with the FR-A700 series