# TECHNICAL DATA

Three Phase Electric Motors - Aluminum Frame
UMHA 63G-4
0.18 kW / 0.25 Cv
1380 RPM

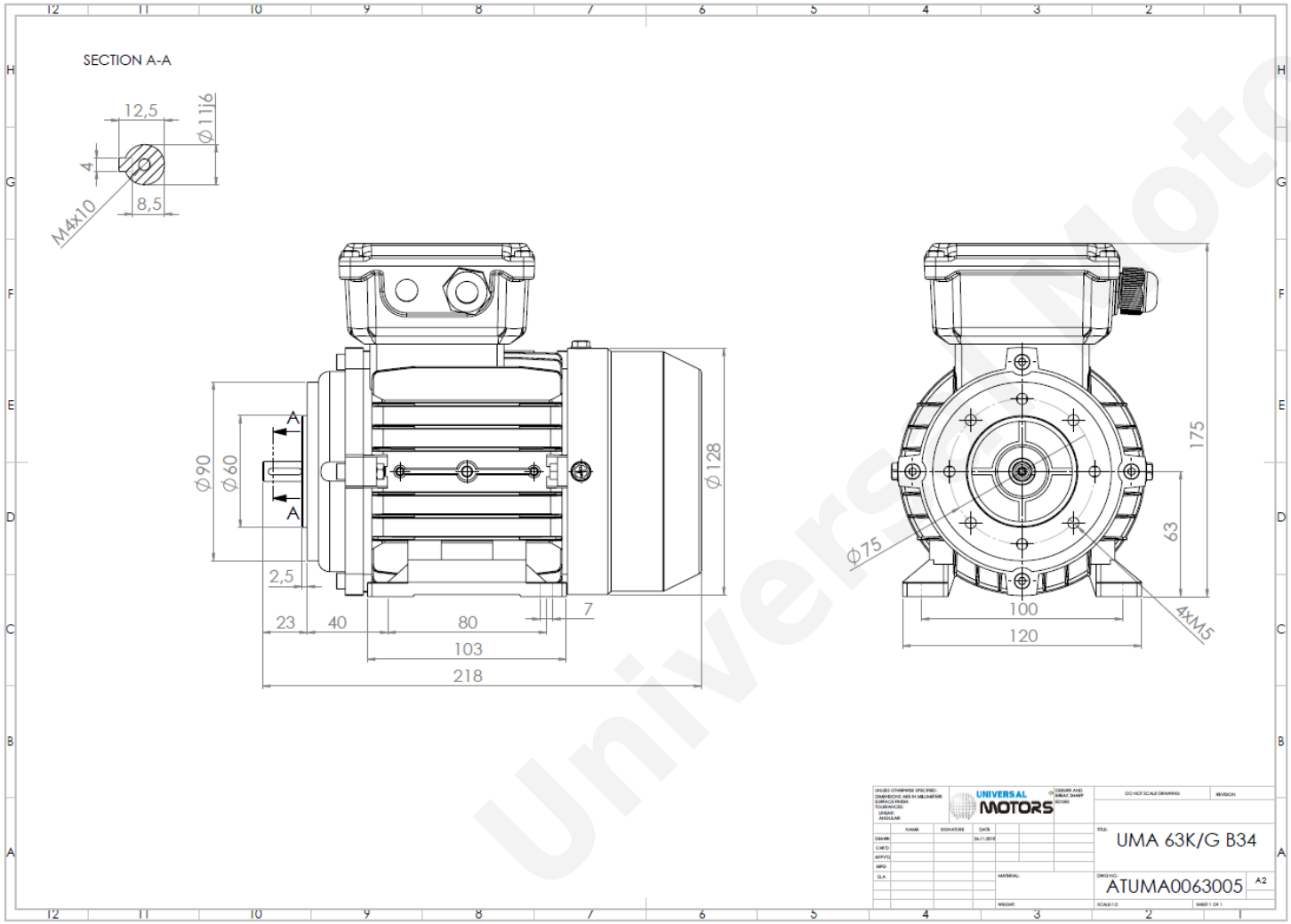


| | |
|---|---|
| Motor type: | **UMHA 63G-4** |
| Output: | **0.18 kW / 0.25 Cv** |
| Speed ($min^{-1}$): | **1380 RPM** |
| Voltage: | **400 V** |
| Frequency: | **50 Hz** |
| Current: | **0.6 A** |
| Power factor (Cos Ø): | **0.62** |
| Poles: | **4** |
| Insulation class: | **F** |
| Temperature rise Class: | **B** |
| Efficiency 50%: | **55.6 %** |
| Efficiency 75%: | **62.4 %** |
| Efficiency 100%: | **64.7 %** |
| Torque: | **1.25 N.m** |
| Tstarting/Tnominal: | **2.4** |
| Istarting/Inominal: | **4.0** |
| Tmaximum/Tnominal: | **2.4** |
| Noise: | **64 Db(A)** |
| Weight: | **4.4 Kg** |
| Bearing DE: | **6201 2Z C3** |
| Bearing NDE: | **6201 2Z C3** |

**Regime - S1** **Altitude - 1000m** **Environment Temperature - 40ºC**

* References applied only in the UK

**CONTACTS:**
Universal Motors UK, Ltd
Unit E2, Meltham Mills Industrial Estate, Meltham Mills Road, Meltham, Holmfirth
West Yorkshire HD9 4AR, U.K
Tel: +44(0) 1484 660 222
Fax: +44(0) 1484 660 333
Mail: enquiries@universalmotors-group.co.uk

Universal Motors