ABB INDUSTRIAL DRIVES

ACS880...+P940 and +P944 drive modules

Supplement

ACS880…+P940 and +P944 drive modules

Supplement

Table of contents

4. Mechanical installation

5. Electrical installation

© 2019 ABB Oy. All Rights Reserved.

3AUA0000145446 Rev E
EN
EFFECTIVE: 2019-10-15

Table of contents

1 Introduction to the supplement

Contents of this chapter 9
Applicability 9
Safety instructions 9
Target audience 9
Purpose of this supplement 10
Related manuals 10

2 Hardware description

Contents of this chapter 11
Product overview 11
Layout of option +P940 (IP20, UL Type Open) 12
Layout of option +P944 (IP20, UL Type Open) 13

3 Guidelines for planning the cabinet installation

Contents of this chapter 15
Limitation of liability 15
Generic cabinet planning instructions 15
Vibration dampers 16
Layout example 16
Minimum air inlet and outlet grating sizes 17
Preventing the recirculation of hot air 17
Installing drives above one another 18
Free space requirements 19
Planning the cabling outside cabinet 19
Installing ABB common mode filters (option +E208) 19

4 Mechanical installation

Contents of this chapter 21
Safety 21
Examining the installation site 22
Necessary tools 22
Moving the drive module 22
Unpacking and examining the delivery 23
ACS880-01 frames R1 and R2 23
ACS880-01 frame R3 24
ACS880-01 frame R4 25
ACS880-01 frame R5 26
ACS880-01 frames R6 to R9 27
ACS880-11 and ACS880-31 frame R3 28
ACS880-11 and ACS880-31 frame R6 29
ACS880-11 and ACS880-31 frame R8 30
Installing the drive 31

5 Electrical installation

Contents of this chapter 33
Warnings 33
Power cable connection diagram 34
Cable connection procedure – ACS880-11… and ACS880-31… +P940 drive modules . 35
Cable connection procedure (IEC) – ACS880-01… +P940 and +P944 drive modules . 35
Preparing the cable ends for connection and making 360-degree grounding at the cable entry plate 35
Connecting the twisted shields and phase conductors of the power cables 36
Installing the drive module shelves and connecting the cables 37
ACS880-01 frames R1 and R2 37
Connecting the control cables – ACS880-01 frames R1 and R2 38
ACS880-01 frame R3 40
Connecting the control cables – ACS880-01 frame R3 42
ACS880-01 frames R4 and R5 43
Connecting the control cables – ACS880-01 frames R4 and R5 47
ACS880-01 frames R6 to R9 48
Connecting the control cables – ACS880-01 frames R6 to R9 50

6 Installation checklist

Contents of this chapter 51
Checklist 51

7 Technical data

Contents of this chapter 55
Dimensions, weights and free space requirements 55
Degree of protection 56

8 Dimension drawings – ACS880-01

Contents of this chapter 57
R1 – Option +P940 (IP20, UL Type Open) 58
R1 – Option +P944 (IP20, UL Type Open) 59
R2 – Option +P940 (IP20, UL Type Open) 60
R2 – Option +P944 (IP20, UL Type Open) 61
R3 – Option +P940 (IP20, UL Type Open) 62
R3 – Option +P944 (IP20, UL Type Open) 63
R4 – Option +P940 (IP20, UL Type Open) 64
R4 – Option +P944 (IP20, UL Type Open) 65
R5 – Option +P940 (IP20, UL Type Open) 66
R5 – Option +P944 (IP20, UL Type Open) 67
R6 – Option +P940 (IP20, UL Type Open) 68
R6 – Option +P944 (IP20, UL Type Open) 69
R7 – Option +P940 (IP20, UL Type Open) 70
R7 – Option +P944 (IP20, UL Type Open) 71
R8 – Option +P940 (IP20, UL Type Open) 72
R8 – Option +P944 (IP20, UL Type Open) 73
R9 – Option +P940 (IP20, UL Type Open) 74
R9 – Option +P944 (IP20, UL Type Open) 75

9 Dimension drawings – ACS880-11 and ACS880-31

Contents of this chapter 77
R3 – Option +P940 (IP20, UL Type Open) 78
R6 – Option +P940 (IP20, UL Type Open) 79
R8 – Option +P940 (IP20, UL Type Open) 80

Further information

1

Introduction to the supplement

Contents of this chapter

This chapter describes the supplement.

Applicability

This supplement is applicable to these drive modules:

- ACS880-01 frames R1 to R9 with options +P940 and +P944
- ACS880-11 frames R3, R6 and R8 with option +P940
- ACS880-31 frames R3, R6 and R8 with option +P940.

It is a supplement to these manuals:

- *ACS880-01 hardware manual* (3AUA0000078093 [English])
- *ACS880-11 hardware manual* (3AXD50000045932 [English])
- *ACS880-31 hardware manual* (3AXD50000045933 [English]).

Safety instructions

See the hardware manual.

Target audience

This manual is intended for people who plan the installation, install, start up and service the drive, or create instructions for the end user of the drive concerning the installation and maintenance of the drive.

Read the manual before working on the drive. You are expected to know the fundamentals of electricity, wiring, electrical components and electrical schematic symbols.

The manual is written for readers worldwide. Both SI and imperial units are shown.

Purpose of this supplement

The supplement gives you instructions on how to install the drive module into a user-defined cabinet. For generic guidelines in planning the installation of drive modules into a user-defined cabinet, see *Drive modules cabinet design and construction instructions* (3AUA0000107668 [English]).

Related manuals

Name	Code
General drive hardware manuals and guides	
ACS880…+P940 and +P944 drive modules supplement	3AUA0000145446
Drive/converter/inverter safety instructions	Multilingual code: 3AXD50000037978
Drive modules cabinet design and construction instructions	3AUA0000107668
ACS880-01 drive hardware manuals and guides	
ACS880-01 hardware manual	3AUA0000078093
ACS880-01…+E208 frame R6 common mode filter kit installation instructions	3AXD50000015178
ACS880-01…+E208 frame R8 common mode filter kit installation instructions	3AXD50000015180
ACS880-01…+E208 frame R9 common mode filter kit installation instructions	3AXD50000015201
ACS880-11 and ACS880-31 drive hardware manuals	
ACS880-11 hardware manual	3AXD50000045932
ACS880-31 hardware manual	3AXD50000045933
Common option manuals for ACS880-11 and ACS880-31	
ACS880-01…+E208 frame R7, ACH580-31… and ACQ580-31…+E208 frame R8 kit installation instructions	3AXD50000015179

2

Hardware description

Contents of this chapter

This chapter briefly describes the construction of the drive module options +P940 and +P944.

Product overview

Drives with option +P940 and +P944 are modules to be installed into a user-defined cabinet.

Drive type	Option code	Degree of protection	Description
ACS880-01	+P940	IP20 (UL Type Open)	Drive module without front covers and cable box
	+P944	IP20 (UL Type Open)	Drive module with front covers but without cable box
ACS880-11, ACS880-31	+P940	IP20 (UL Type Open)	Drive module without front covers

Layout of option +P940 (IP20, UL Type Open)

The image below shows the layout of an example drive module, ACS880-01 frame R8.

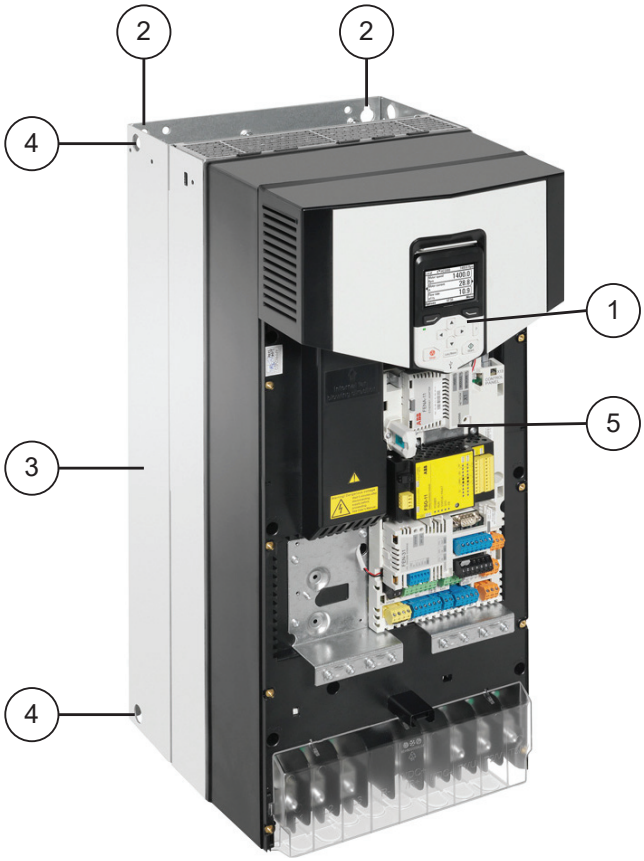

1	Control panel
2	Four fastening points at the back of the drive
3	Heatsink
4	Lifting eyes
5	Control unit

Layout of option +P944 (IP20, UL Type Open)

The image below shows the layout of an example drive module, ACS880-01 frame R5.

1	Control panel
2	Front cover
3	Four fastening points at the back of the drive
4	Heatsink
5	Lifting eyes

3

Guidelines for planning the cabinet installation

Contents of this chapter

This chapter gives ACS880-01, ACS880-11 and ACS880-31 specific guidelines for planning drive cabinets and installing the drive modules into a user-defined cabinet. The guidelines are essential for the safe and trouble-free use of the drive system.

Limitation of liability

The installation must always be designed and made according to applicable local laws and regulations. ABB does not assume any liability whatsoever for any installation which breaches the local laws and/or other regulations. Furthermore, if the recommendations given by ABB are not followed, the drive may experience problems that the warranty does not cover.

Generic cabinet planning instructions

See *Drive modules cabinet design and construction instructions* (3AUA0000107668 [English]) for

- cabinet construction: disposition of the devices, grounding of mounting structures, busbar material and joints, shrouds and tightening torques
- cooling and degrees of protection
- EMC requirements
- fastening the cabinet
- cabinet placement on a cable channel
- planning the use of cubicle heaters
- control panel mounting platforms.

Vibration dampers

Vibration dampers are not needed in cabinet installations of ACS880-01, ACS880-11 and ACS880-31 drive modules.

Layout example

An example cabinet layout is shown below.

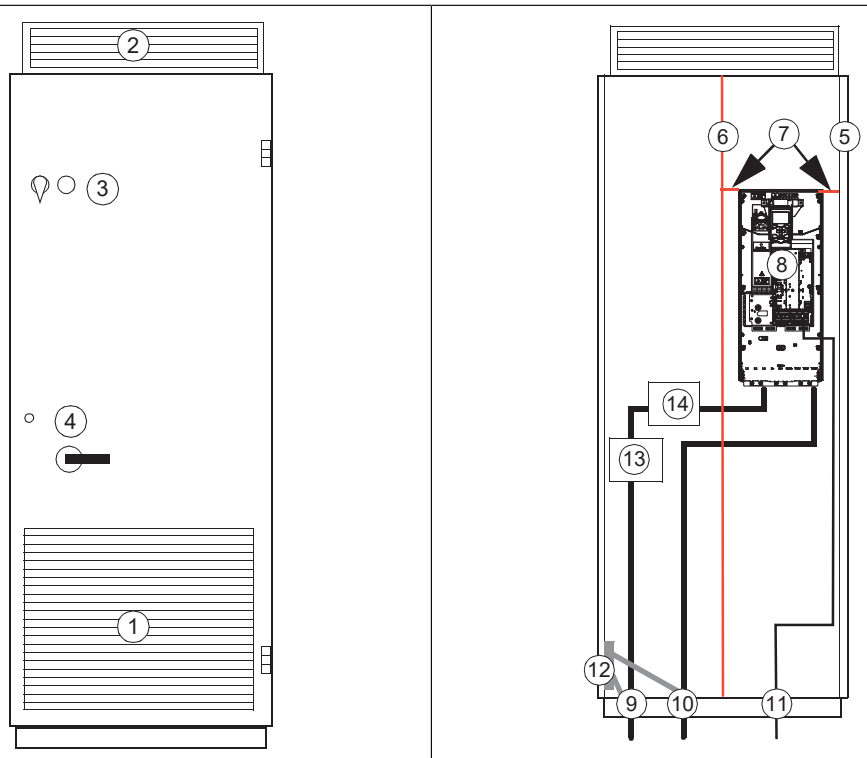

1	Air inlet	8	Drive module with control unit and control panel
2	Air outlet	9	Input power cable including the protective ground conductor (PE) of the drive
3	Contactor control switch and emergency stop switch (connected to the contactor control circuit inside the cabinet)	10	Motor cable including the protective ground conductor
4	Operating handle of the disconnector	11	External control cables
5	Supporting frame of the cabinet	12	Cabinet grounding busbar (PE)
6	Vertical air baffle that separates the cool and hot areas (leak-proof entries)	13	Disconnector and fuses
7	Horizontal air baffles	14	Contactor

Roof air flow viewed from top:

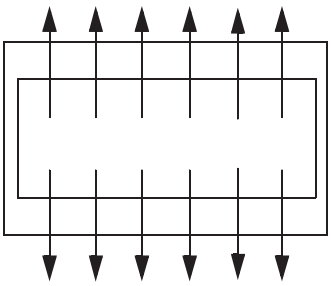

Minimum air inlet and outlet grating sizes

Make sure that the air inlet and outlets are large enough to allow sufficient air flow in and out of the cabinet. This is critical for the correct cooling of the drive module. See the minimum grating sizes below.

Frame size	Minimum effective area of cabinet air inlet (cm^2)		Minimum effective area of cabinet air outlet (cm^2)	
	IP22	IP54	IP22	IP54
R1	175	250	350	550
R2	225	350	450	700
R3	275	450	550	900
R4	350	550	700	1100
R5	400	650	800	1250
R6	475	750	950	1500
R7	650	1100	1300	2000
R8	1000	1600	2000	3200
R9	1500	2400	3000	4800

Preventing the recirculation of hot air

Prevent hot air circulation outside the cabinet by leading the outgoing hot air away from the area where the inlet air to the cabinet is taken. Possible solutions are listed below:

- gratings that guide air flow at the air inlet and outlet
- air inlet and outlet at different sides of the cabinet
- cool air inlet in the lower part of the front door, and an extra exhaust fan on the roof of the cabinet.

Prevent hot air circulation inside the cabinet with, for example, leak-proof air baffles. No gaskets are usually required.

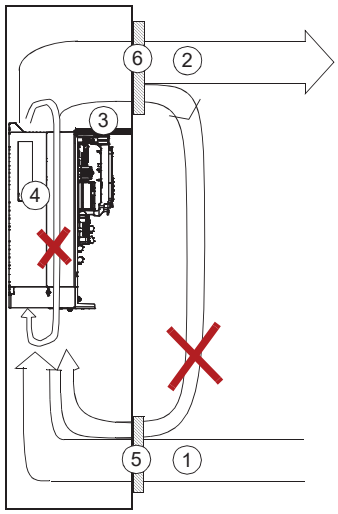

1	Main air flow in	4	Drive
2	Main air flow out	5	Air inlet filter
3	Air baffle plate	6	Air outlet filter

Installing drives above one another

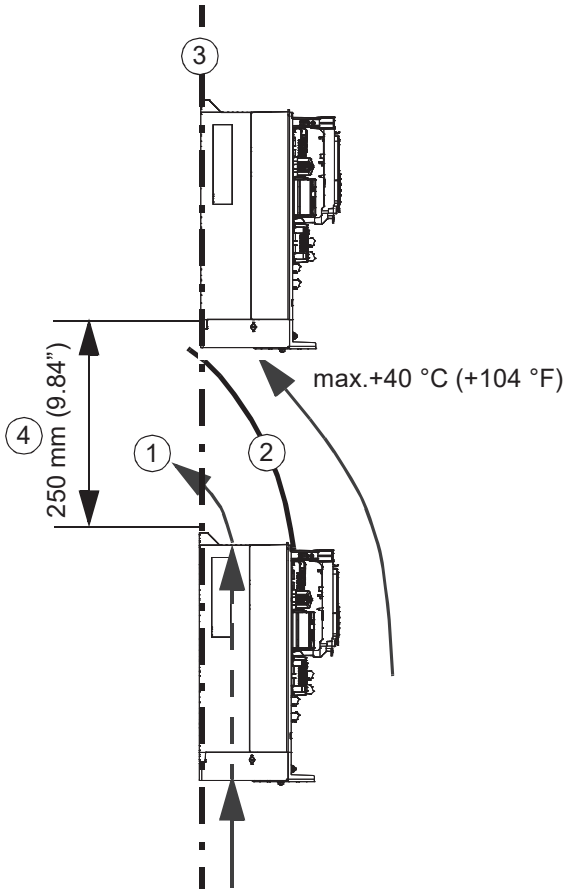

1	Air flow through the drive	3	Mounting plate that allows air flow
2	Air baffle	4	Minimum spacing between the drives

Free space requirements

The required free space at the top and bottom of the drive module is shown below. The free space is needed to make sure that the module cools correctly.

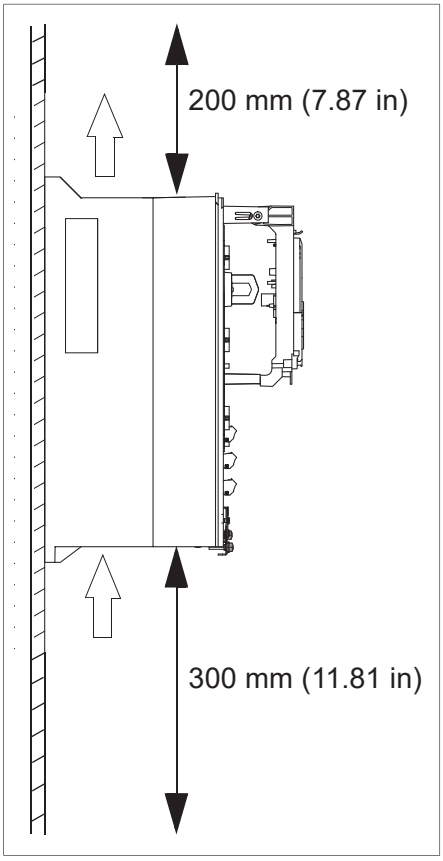

Planning the cabling outside cabinet

See the cable routing instructions in the hardware manual.

Installing ABB common mode filters (option +E208)

Common mode filter kits are available as options from ABB. For drive modules without the cable entry box, hang the common mode filter ring on the cabinet structure.

For the dimensions of the ring and installing of the motor cable through the ring, see

ACS880-01…+E208 frame R6 common mode filter installation instructions	3AXD50000015178
ACS880-01…+E208 frame R8 common mode filter installation instructions	3AXD50000015180
ACS880-01…+E208 frame R9 common mode filter installation instructions	3AXD50000015201
ACS880-01…+E208 frame R7, ACH580-31… and ACQ580-31…+E208 frame R8 kit installation instructions	3AXD50000015179

4

Mechanical installation

Contents of this chapter

This chapter gives guidelines for the mechanical installation of the drive module into a cabinet.

Safety

WARNING!
For frame sizes R4 to R9: Use the lifting eyes of the drive when you lift the drive. Do not tilt the drive. The drive is heavy and its center of gravity is high. An overturning drive can cause physical injury.

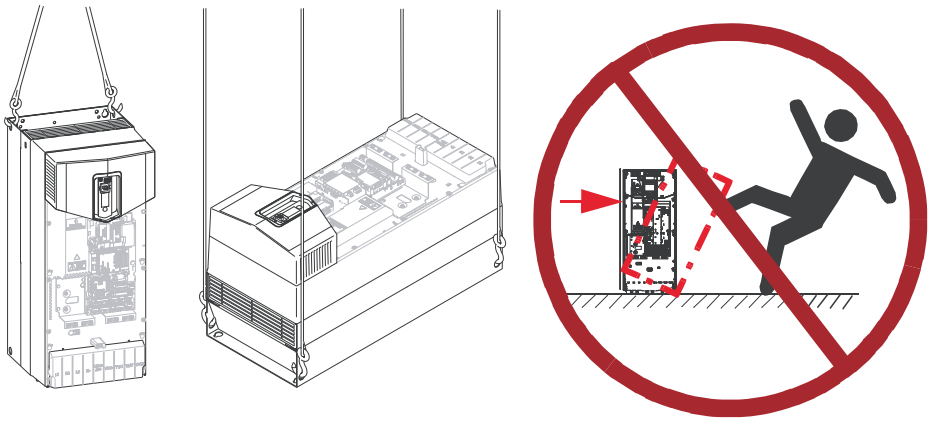

Examining the installation site

See the drive hardware manual for

- allowed ambient conditions in chapter Technical data
- allowed installation positions.

Examine the installation site:

- The installation site is sufficiently ventilated or cooled to remove heat from the drive. See the technical data.
- The ambient conditions of the drive meet the specifications. See the technical data.
- The wall behind the unit and the material above and below the unit is of non-flammable material.
- The installation surface is as close to vertical as possible and strong enough to support the drive.
- There is enough free space around the drive to enable cooling, maintenance, and operation. See the free space specifications for the drive.
- Make sure that there are no sources of strong magnetic fields such as high-current single-core conductors or contactor coils near the drive. A strong magnetic field can cause interference or inaccuracy in the operation of the drive.

Necessary tools

- Drill and drill bits
- Screwdriver and/or wrench with bits.

Moving the drive module

Move the transport package by pallet truck to the installation site.

Unpacking and examining the delivery

Examine that all items are present and there are no signs of damage. Read the data on the type designation label of the drive to make sure that the drive is of the correct type.

ACS880-01 frames R1 and R2

The figure below shows the drive package with its contents.

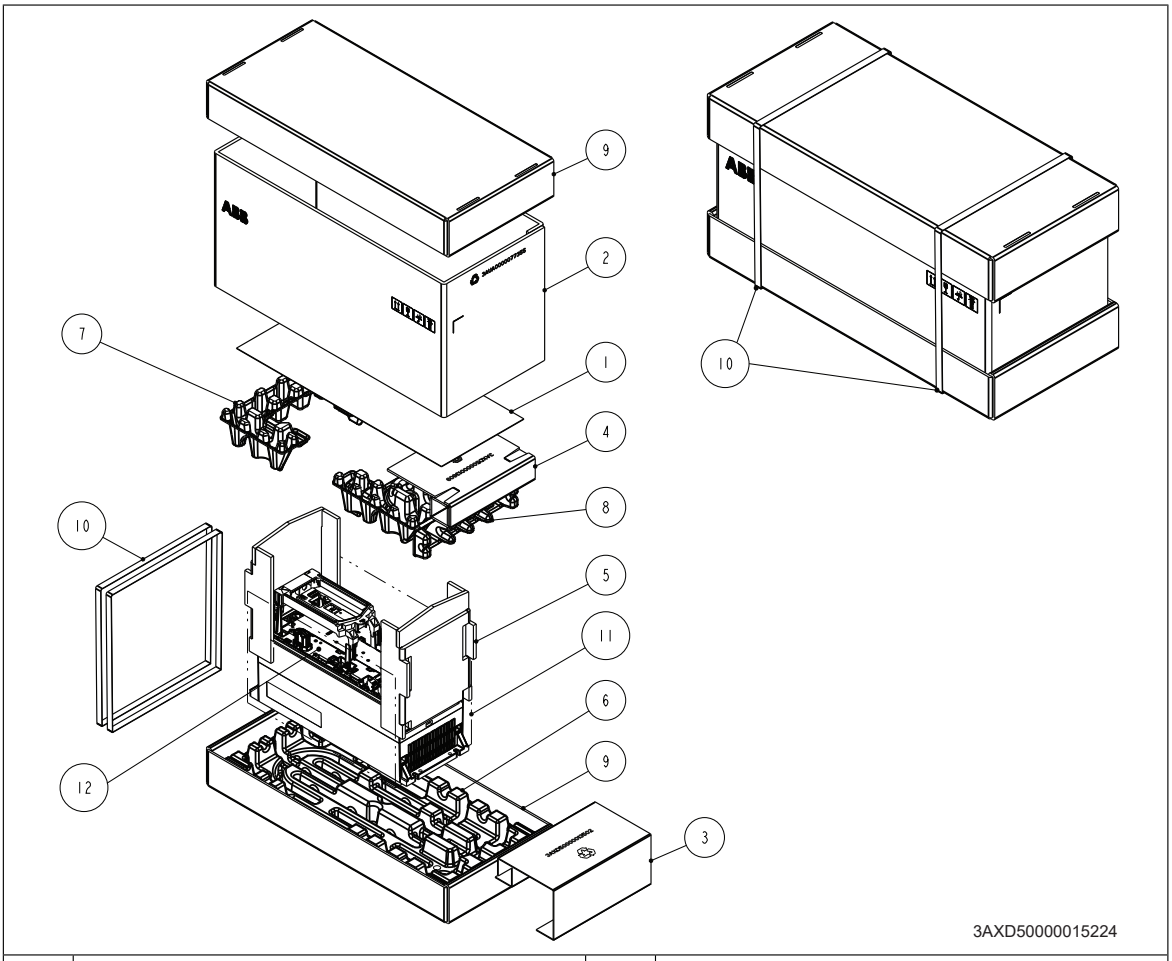

1	Mounting template	9	Cardboard trays
2	Cardboard sleeve	10	Straps
3…5	Cardboard supports	11	Plastic bag
6…8	Cushions	12	Drive with factory installed options

To unpack:

- Cut the straps (10)
- Remove the top cardboard tray (9), mounting template (1), cardboard support (4) and cushions (7 and 8)
- Lift the sleeve (2)
- Remove the cardboard supports (5)
- Lift the drive module.

ACS880-01 frame R3

The figure below shows the drive package with its contents.

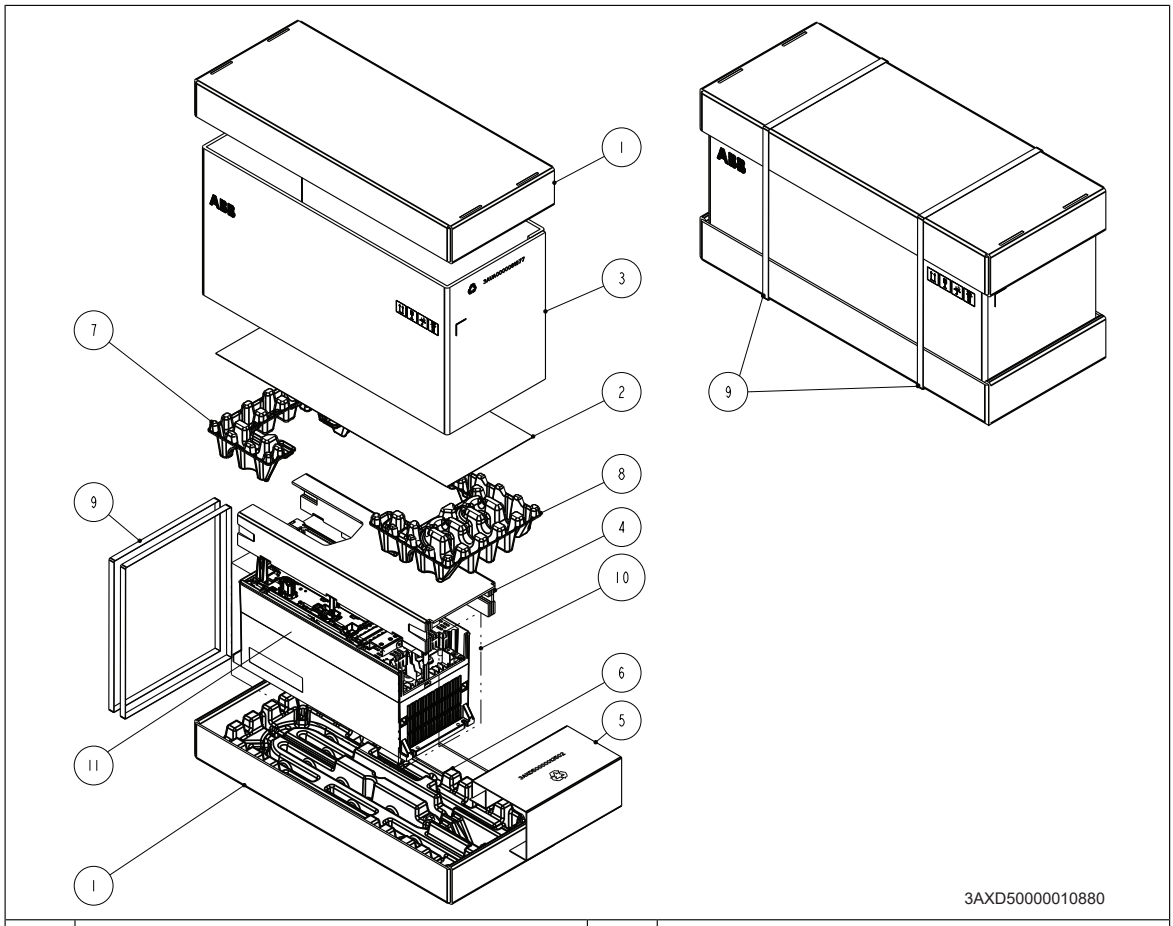

1	Cardboard trays	6…8	Cushions
2	Mounting template	9	Straps
3	Cardboard sleeve	10	Plastic bag
4	Cardboard spacer	11	Drive with factory installed options
5	Cardboard support		

To unpack:

- Cut the straps (9)
- Remove the top cardboard tray (1), mounting template (2) and cushions (7 and 8)
- Lift the sleeve (3)
- Remove the cardboard spacer (4)
- Lift the drive module.

ACS880-01 frame R4

The figure below shows the drive package with its contents.

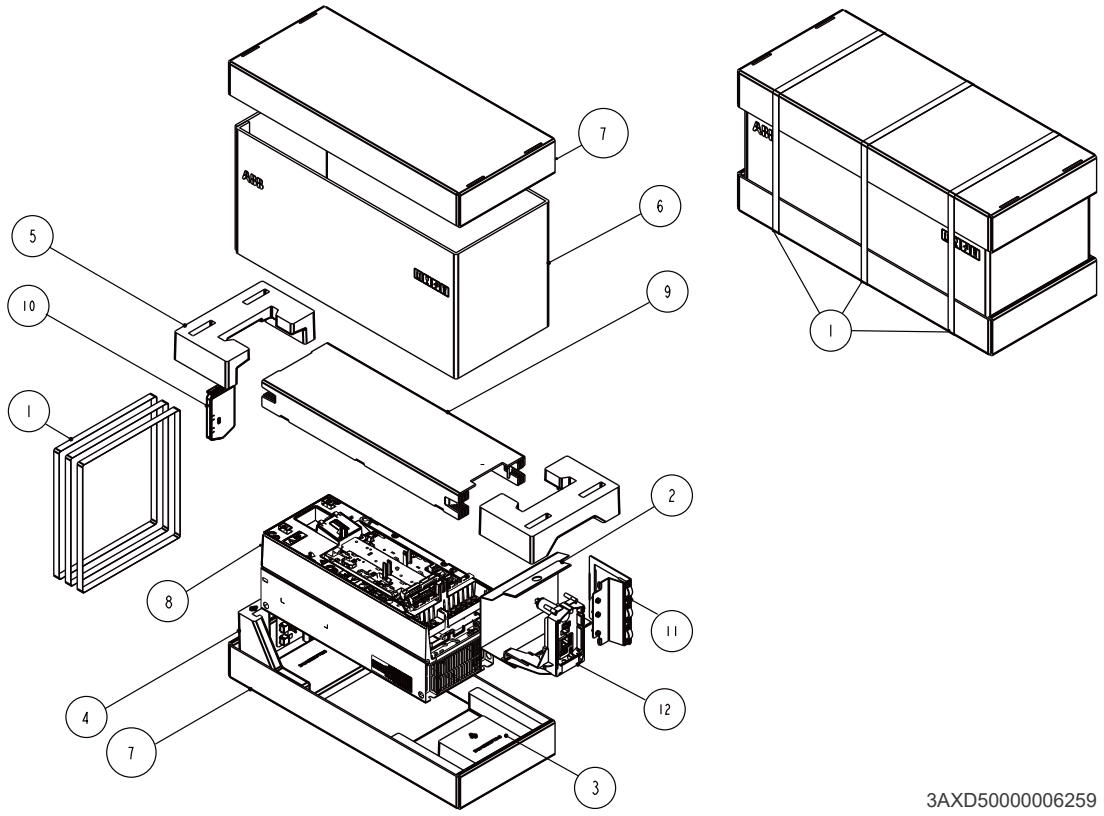

1	Straps	8	Drive with factory installed options
2	Cardboard support	9	Cardboard spacer
3…5	Cushions	10	CDPI-01 assembly kit
6	Sleeve	11	Main cable clamp kit
7	Trays	12	Panel holder

To unpack:

- Cut the straps (1)
- Remove the top tray (7)
- Remove the cardboard spacer (9), cushions (5), cardboard support (2), panel holder (12) and main cable clamp kit (11)
- Remove the sleeve
- Attach lifting hooks to the lifting eyes of the drive module. Lift the drive module with a hoist.

ACS880-01 frame R5

The figure below shows the drive package with its contents.

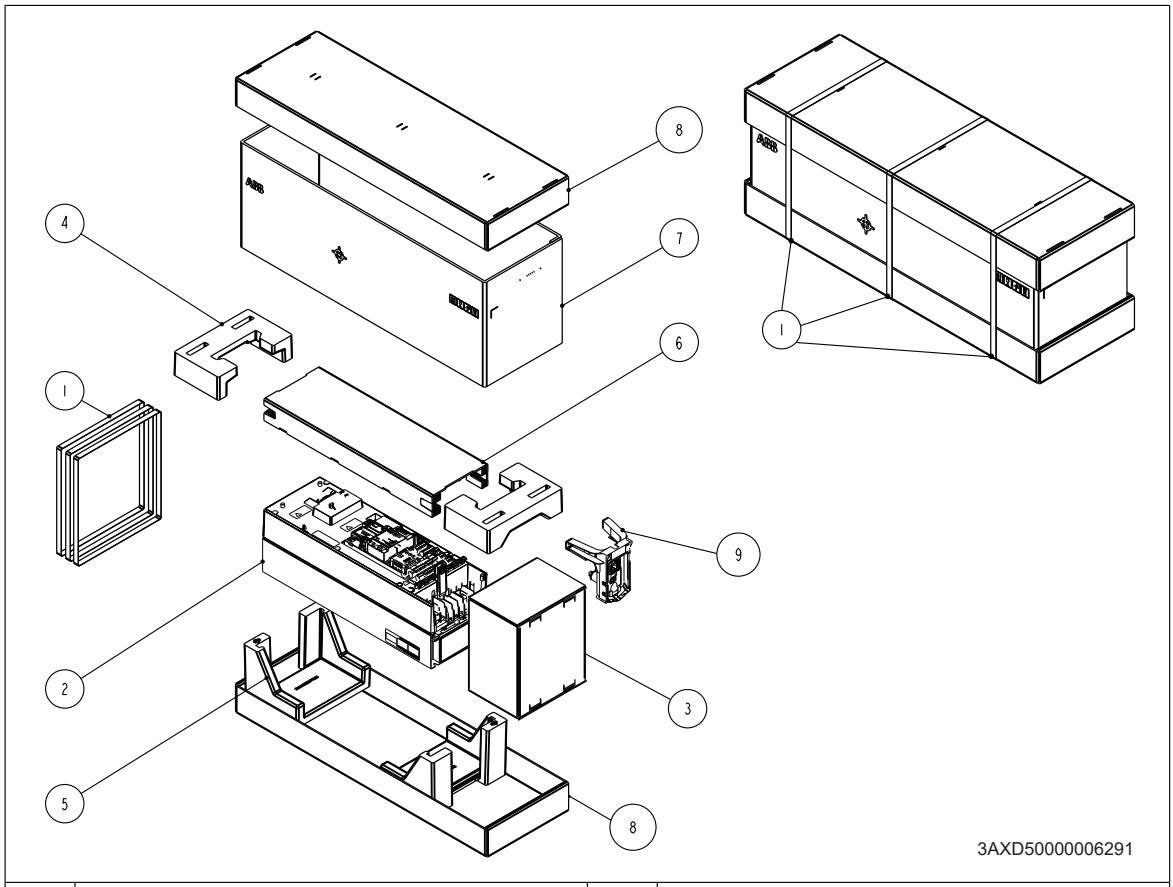

1	Straps	6	Cardboard spacer
2	Drive with factory installed options	7	Sleeve
3	Cardboard box for panel holder	8	Trays
4…5	Cushions	9	Panel holder

To unpack:

- Cut the straps (1)
- Remove the top tray (8), cushions (4), cardboard spacer (6) and cardboard box for panel holder (3)
- Remove the sleeve (7).
- Attach lifting hooks to the lifting eyes of the drive module. Lift the drive module with a hoist.

ACS880-01 frames R6 to R9

The figure below shows the drive package with its contents.

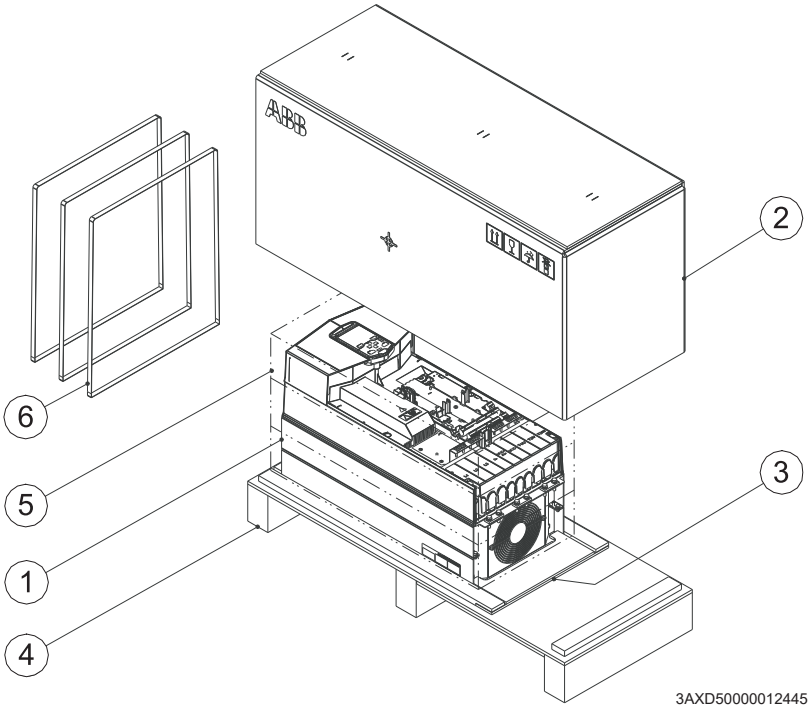

1	Drive with factory installed options	4	Pallet tray
2	Cardboard cover	5	VCI bag
3	Stopper	6	Straps

To unpack:

- Cut the straps (6)
- Remove the cardboard cover (2)
- Remove the stopper (3)
- Attach lifting hooks to the lifting eyes of the drive module. Lift the drive module with a hoist.

ACS880-11 and ACS880-31 frame R3

The figure below shows the drive package with its contents.

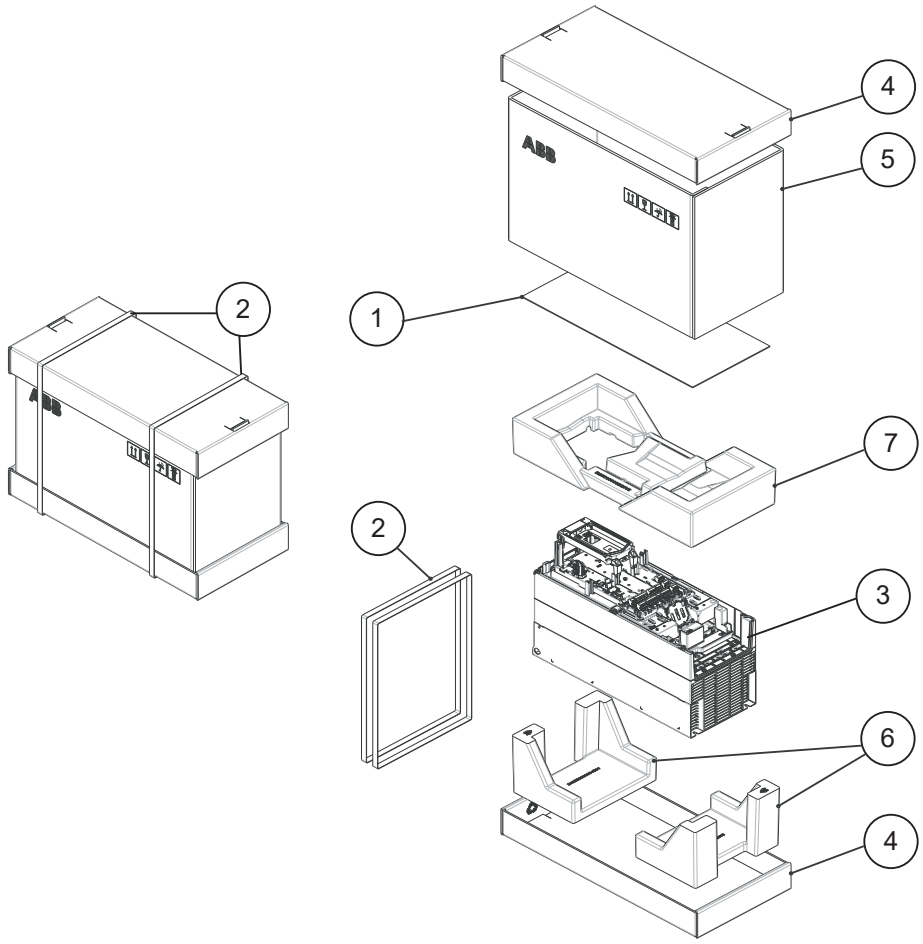

3AXD50000041449

1	Mounting template	4	Trays
2	Straps	5	Sleeve
3	Drive with factory installed options	6…7	Package cushion

To unpack:

- Cut the straps (2)
- Remove the top tray (4), sleeve (5), mounting template (1) and cushion (7)
- Lift the drive.

ACS880-11 and ACS880-31 frame R6

The figure below shows the drive package with its contents.

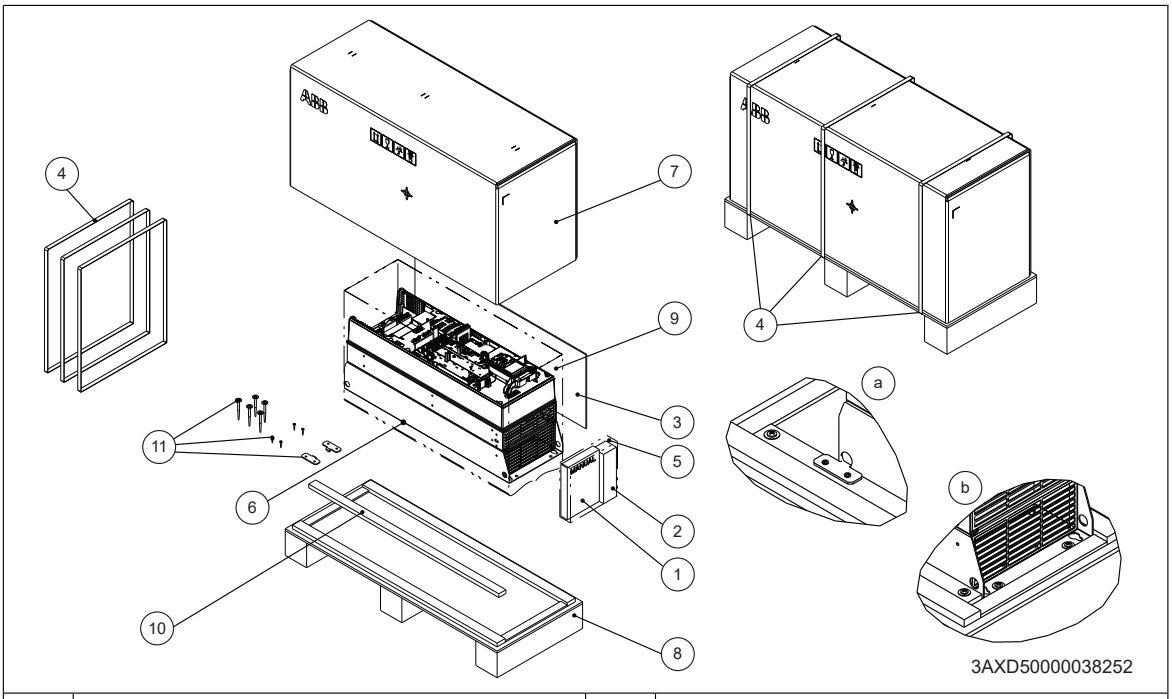

1	Printed quick guides and manuals, multilingual residual voltage warning sticker	7	Cardboard cover
2	Accessories	8	Pallet
3	Mounting template	9	VCI bag
4	Straps	10	Plywood support
5	Plastic bag	11	Packing brackets and screws
6	Drive with factory installed options		

To unpack:

- Cut the straps (4)
- Remove the cardboard cover (7)
- Undo the attaching screws (b) and packing brackets (a)
- Attach lifting hooks to the lifting eyes of the drive module. Lift the drive module with a hoist.

ACS880-11 and ACS880-31 frame R8

The figure below shows the drive package with its contents.

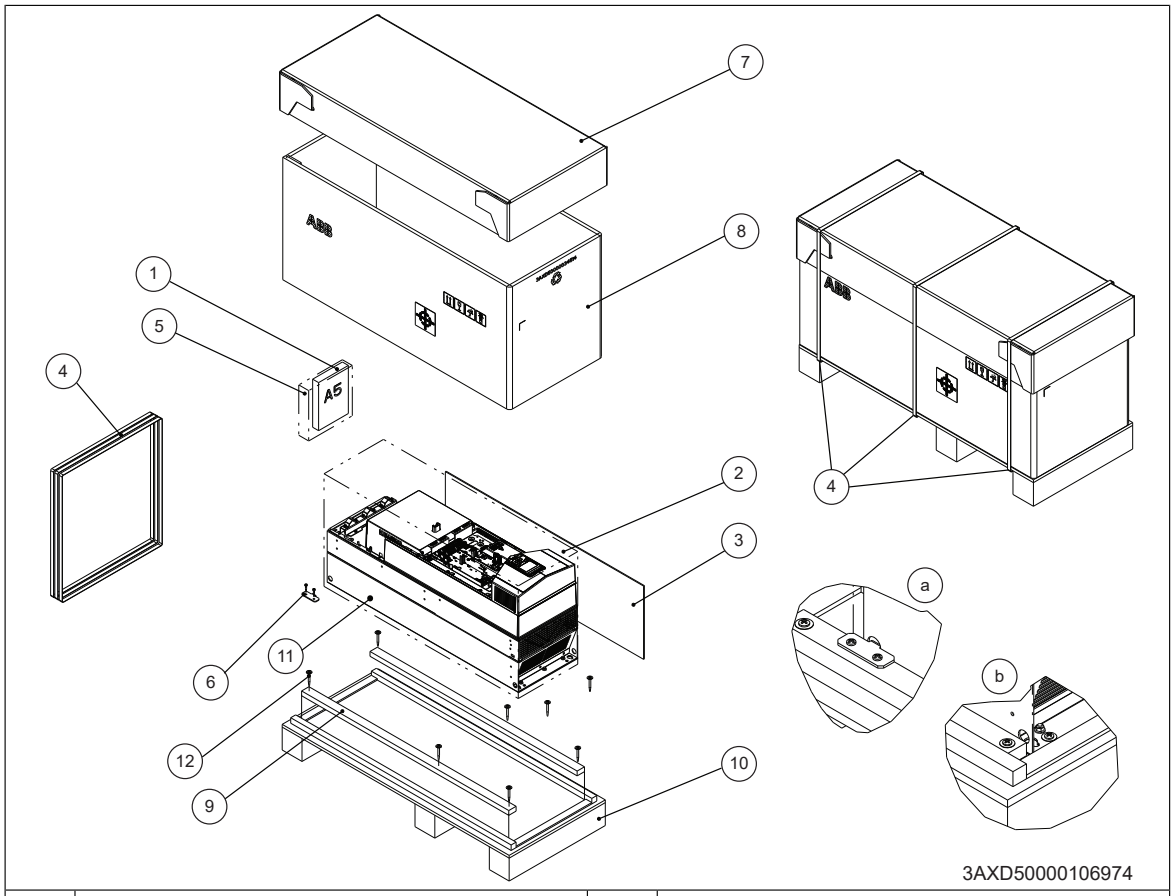

1	Printed quick guides and manuals, multilingual residual voltage warning sticker	7	Tray
2	VCI bag	8	Sleeve
3	Mounting template	9	Plywood supports
4	Straps	10	Pallet
5	Plastic bag	11	Drive with factory installed options
6	Packing brackets	12	Screws

To unpack:

- Cut the straps (4)
- Remove the top tray (7), sleeve (8) and mounting template (3)
- Undo the packing brackets (a) and attaching screws (b)
- Attach lifting hooks to the lifting eyes of the drive module. Lift the drive module with a hoist.

Installing the drive

1. See the dimension drawings. Mark the locations for the four mounting holes.
2. Start the screws or bolts into the mounting holes.
3. Position the drive onto the screws.
4. Tighten the screws in the wall securely.

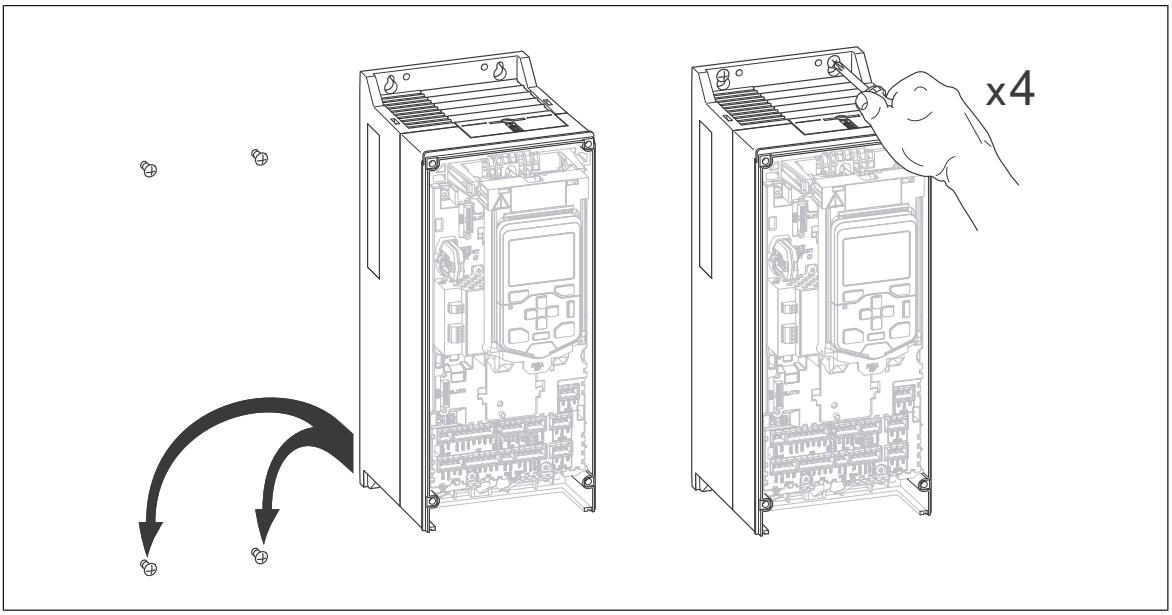

5

Electrical installation

Contents of this chapter

This chapter tells you how to install the power and control cables to the drive module. For other electrical installation instructions that concern the drive, see the hardware manual.

Warnings

WARNING!
Obey the safety instructions of the drive. If you ignore them, injury or death, or damage to the equipment can occur.

If you are not a qualified electrical professional, do not do installation or maintenance work.

Power cable connection diagram

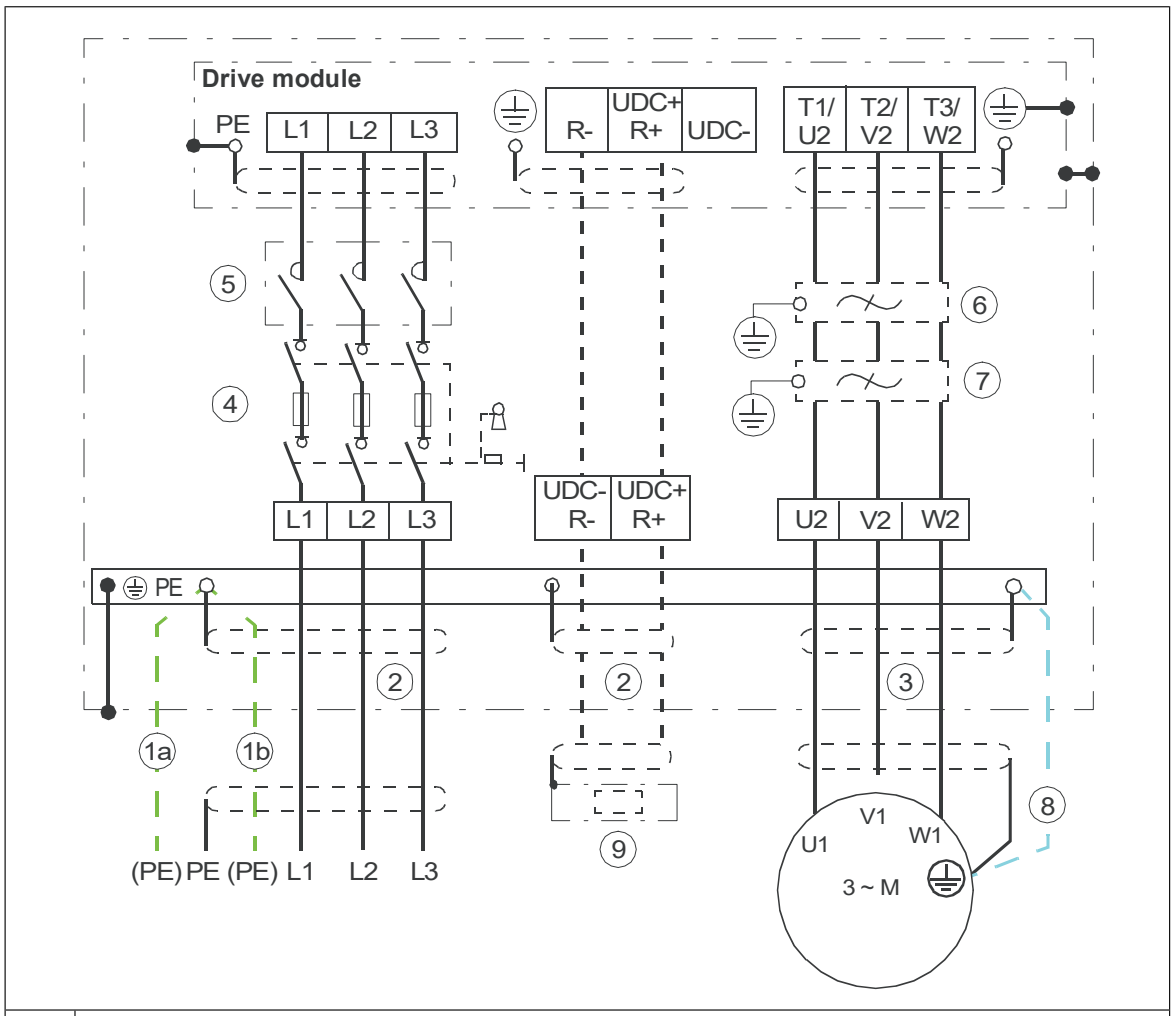

1	Use a separate grounding PE cable (1a) or a cable with a separate PE conductor (1b) if the conductivity of the shield does not meet the requirements for the PE conductor.
2	ABB recommends 360° grounding if shielded cable is used. Ground the other end of the input cable shield or PE conductor at the distribution board.
3	360° grounding is required.
4	Switch-disconnector and fuses. See the instructions on selecting the supply disconnecting device in the hardware manual.
5	Line contactor (optional)
6	Common mode filter (option +E208)
7	d*u*/d*t* filter or sine filter (optional)
8	Use a separate grounding cable if the shield does not meet the requirements of IEC 61439-1 and there is no symmetrically constructed grounding conductor in the cable. See the hardware manual.
9	External brake resistor

Note: If there is a symmetrically constructed grounding conductor on the motor cable in addition to the conductive shield, connect the grounding conductor to the grounding terminal at the drive and motor ends.

Do not use an asymmetrically constructed motor cable for motors above 30 kW. Connecting its fourth conductor at the motor end increases bearing currents and causes extra wear.

Cable connection procedure – ACS880-11… and ACS880-31… +P940 drive modules

Connect the power cables as described in the hardware manual.

Cable connection procedure (IEC) – ACS880-01… +P940 and +P944 drive modules

This section gives instructions on how to connect the power cables. For US cabling instructions, see the quick installation guide.

Preparing the cable ends for connection and making 360-degree grounding at the cable entry plate

1. Peel off 3…5 cm (1 1/4 … 2 in) of the outer insulation of the cables at the cable entries with the conductive sleeves for the 360° high-frequency grounding.

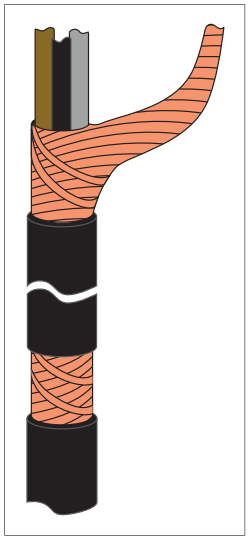

2. Prepare the ends of the cables.

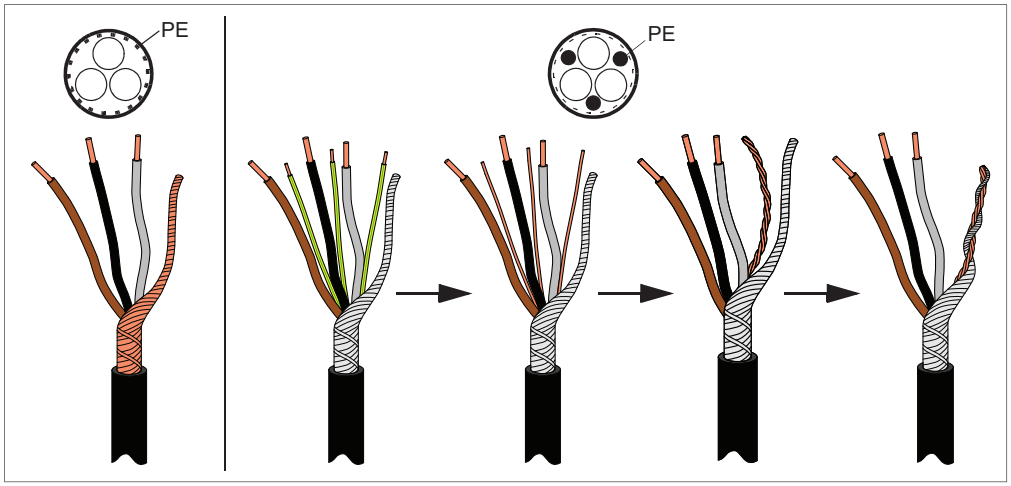

WARNING!
Apply grease to stripped aluminum conductors before attaching them to non-coated aluminum cable lugs. Obey the grease manufacturer's instructions. Aluminum-aluminum contact can cause oxidation in the contact surfaces.

3. If fire insulation is used, make an opening in the mineral wool sheet according to the diameter of the cable.
4. Put the cables through the entry plate.
5. Remove rubber grommets from the entry plate for the cables to be connected. Cut adequate holes into the rubber grommets. Slide the grommets onto the cables. Slide the cables through the entry plate and attach the grommets to the holes.
6. Attach the conductive sleeves to the cable shields with cable ties. Tie up the unused conductive sleeves with cable ties. An example of bottom entry is shown below. For top entry, place the grommet upwards.

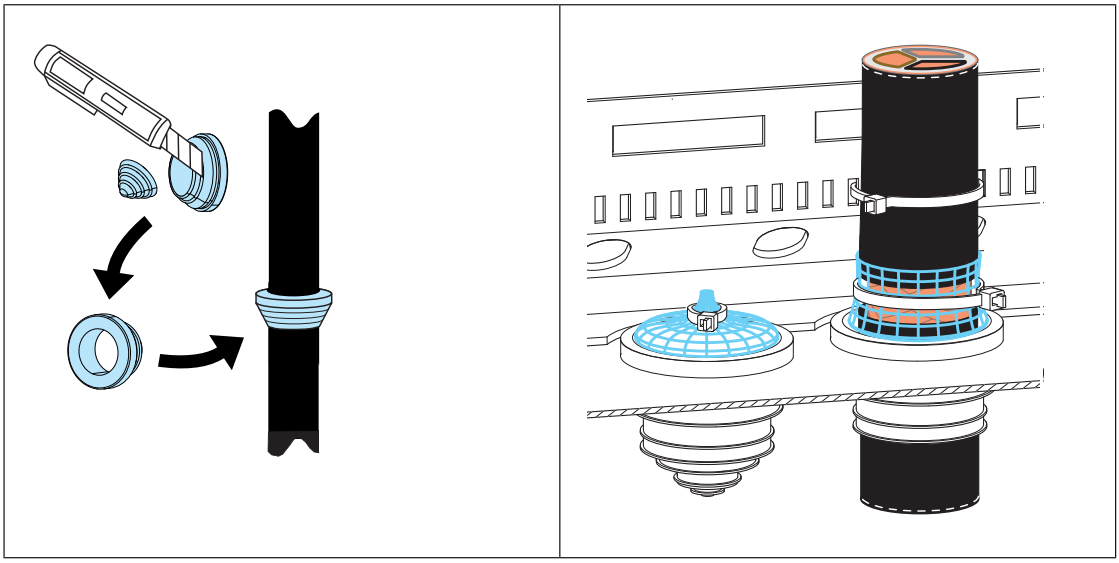

Connecting the twisted shields and phase conductors of the power cables

Frame	In section *Installing the drive module shelves and connecting the cables*, see
R1…R2	*ACS880-01 frames R1 and R2 (page 37)*
R3	*ACS880-01 frame R3 (page 40)*
R4…R5	*ACS880-01 frames R4 and R5 (page 43)*
R6…R9	*ACS880-01 frames R6 to R9 (page 48)*

Installing the drive module shelves and connecting the cables

ACS880-01 frames R1 and R2

1. Attach the mechanical support shelf for the power cables to the drive module.

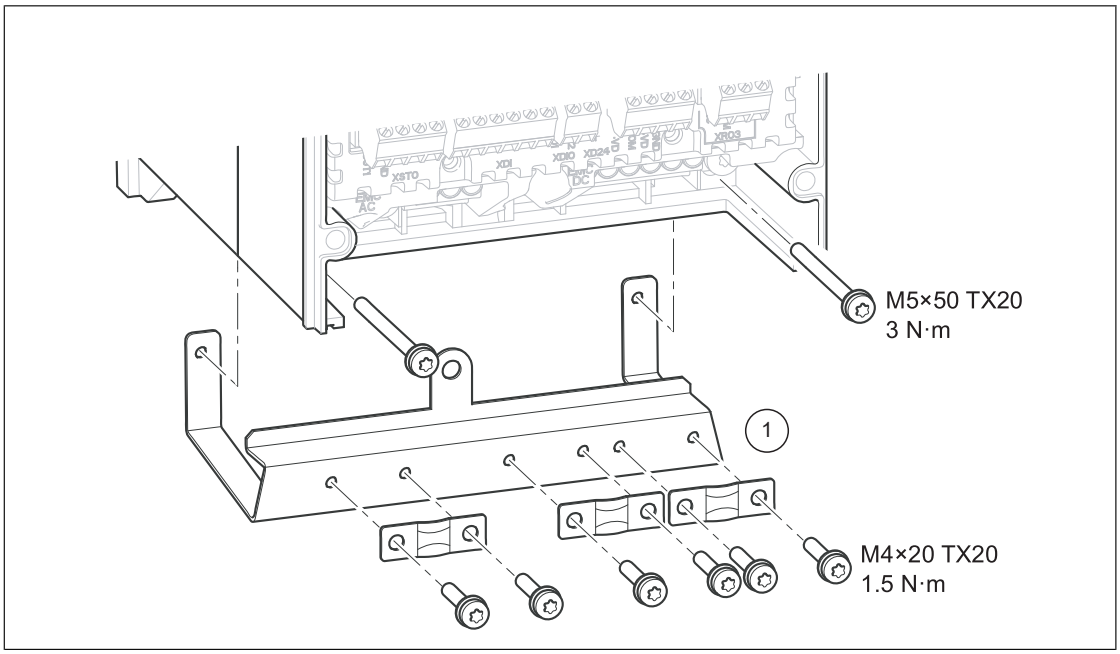

2. Connect the twisted shields of the power cables to the grounding terminals.
3. Connect the phase conductors of the input cable to the L1, L2 and L3 terminals and the phase conductors of the motor cable to the T1/U, T2/V and T3/W terminals. Connect the brake resistor conductors (if present) to the R+ and R- terminals. Tighten the screws to the torque given in the figure below.

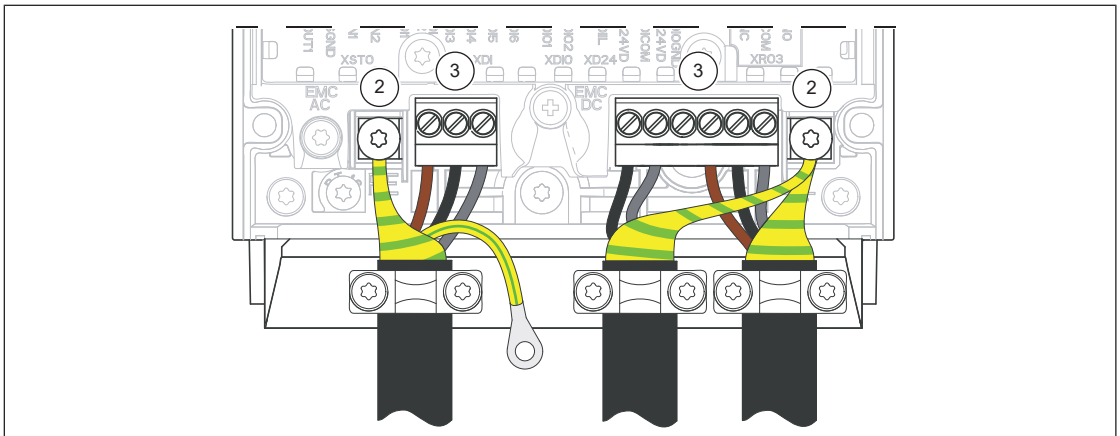

L1, L2, L3, T1/U, T2/V, T3/W, R-, R+/UDC+, UDC	Grounding
0.6 N·m	1.8 N·m

4. Install the shelves for grounding the additional PE conductor of the input cable and the pair-cable shields and grounding wires of the control cables.

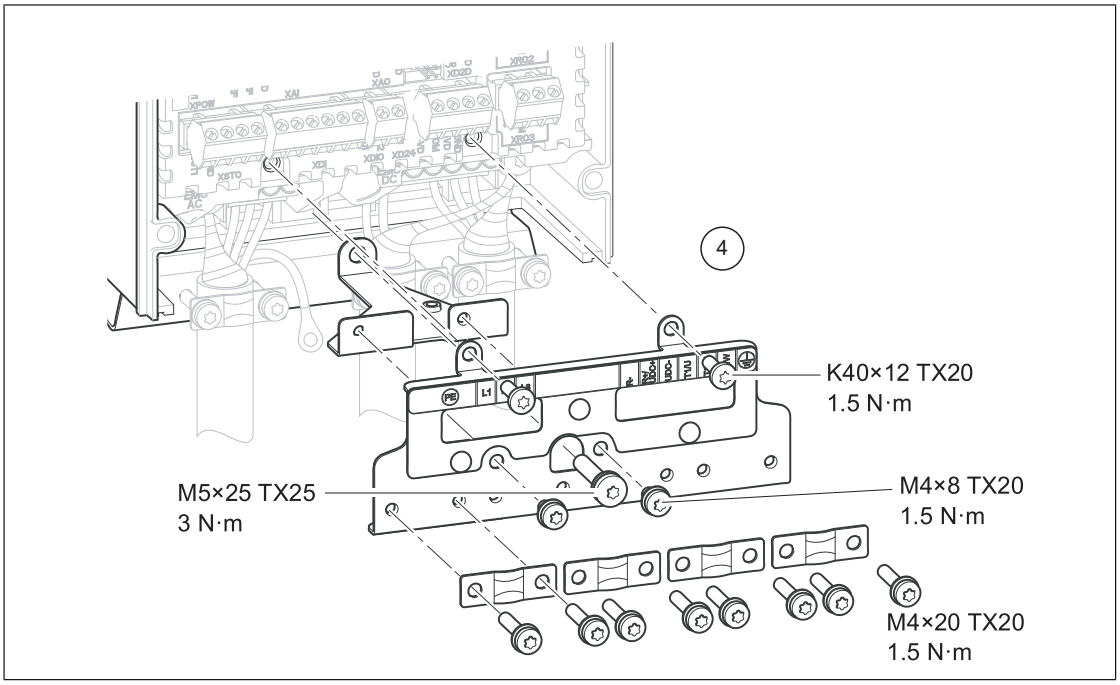

5. Connect the additional PE conductor of the input cable to the grounding shelf.

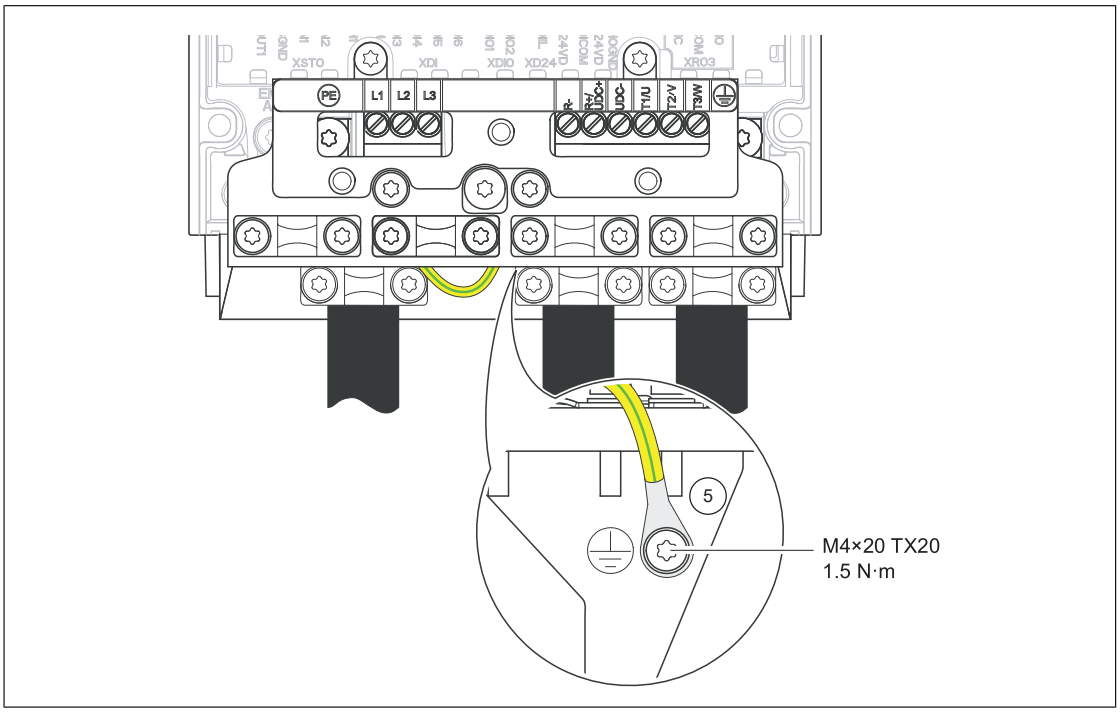

6. Go to section *Connecting the control cables – ACS880-01 frames R1 and R2 (page 38)*.

Connecting the control cables – ACS880-01 frames R1 and R2

1. Strip the cable ends and cut to suitable length (note the extra length of the grounding conductors).
2. Ground the outer shields of all control cables 360 degrees at the cabinet entry.
3. Secure the cables mechanically at the clamps.

4. Ground the pair-cable shields to the clamps. Leave the other end of the shields unconnected or ground them indirectly via a high-frequency capacitor with a few nanofarads, eg, 3.3 nF / 630 V.
5. Connect the conductors to the appropriate terminals of the control unit (see the default I/O connections in the hardware manual).
6. Wire the optional modules if included in the delivery.

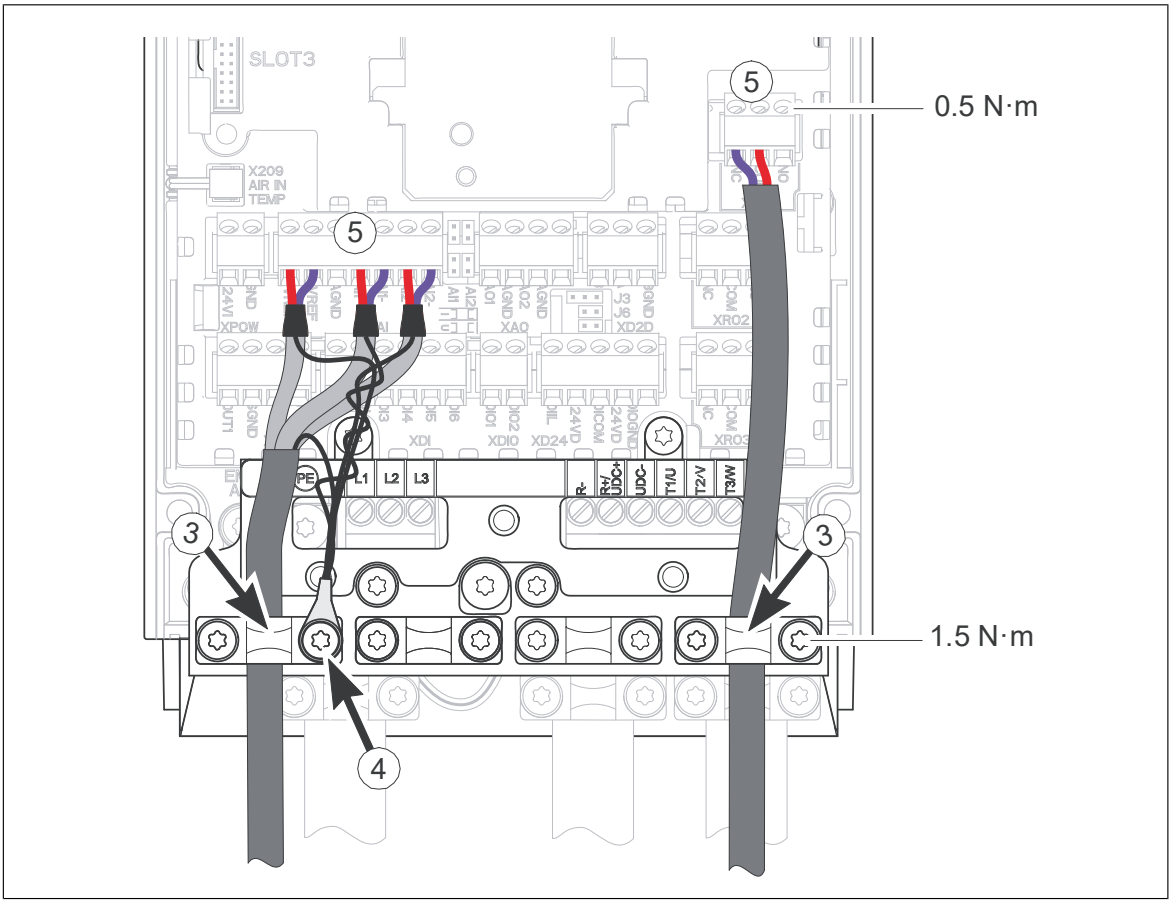

ACS880-01 frame R3

1. Attach the mechanical support shelf for the power cables to the drive module.

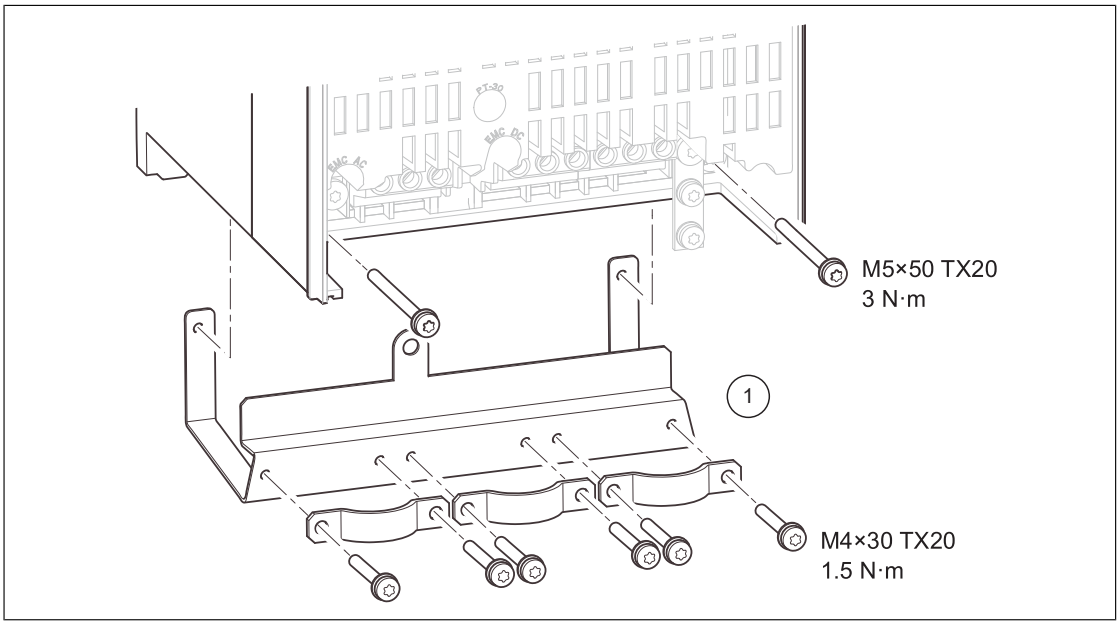

2. Connect the twisted shields of the power cables to the grounding terminals.
3. Connect the phase conductors of the input cable to the L1, L2 and L3 terminals and the phase conductors of the motor cable to the T1/U, T2/V and T3/W terminals. Connect the brake resistor conductors (if present) to the R+ and R- terminals. Tighten the screws to the torque given in the figure below.

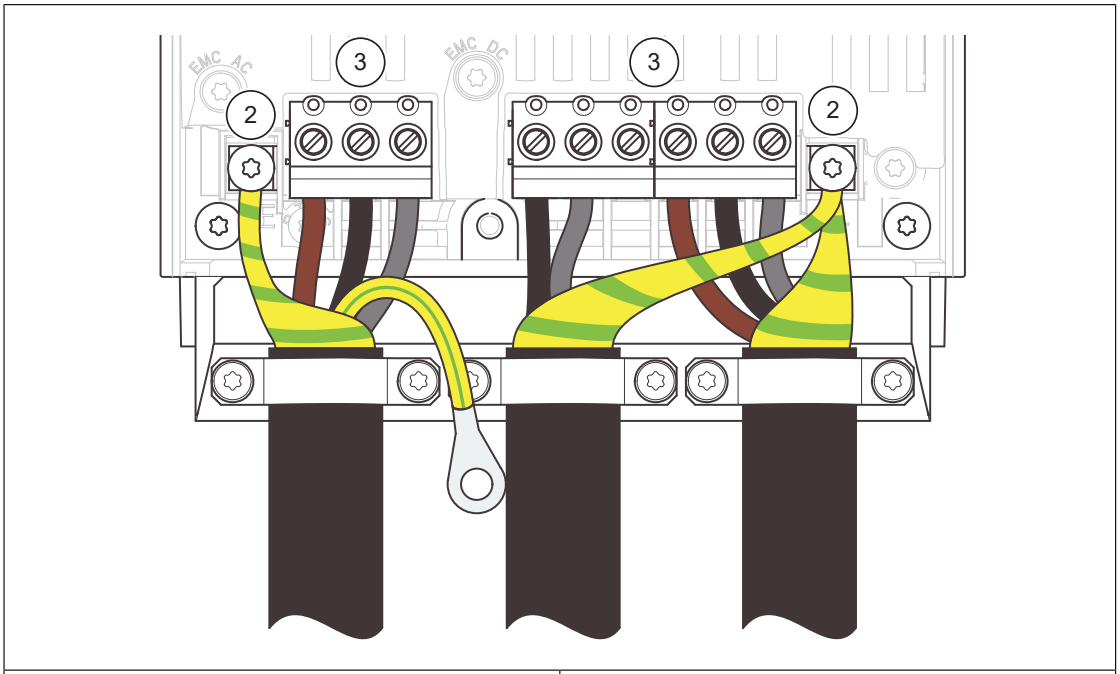

L1, L2, L3, T1/U, T2/V, T3/W, R-, R+/UDC+, UDC	Grounding
0.6 N·m	1.8 N·m

4. Install the shelves for grounding the additional PE conductor of the input cable and the pair-cable shields and grounding wires of the control cables.

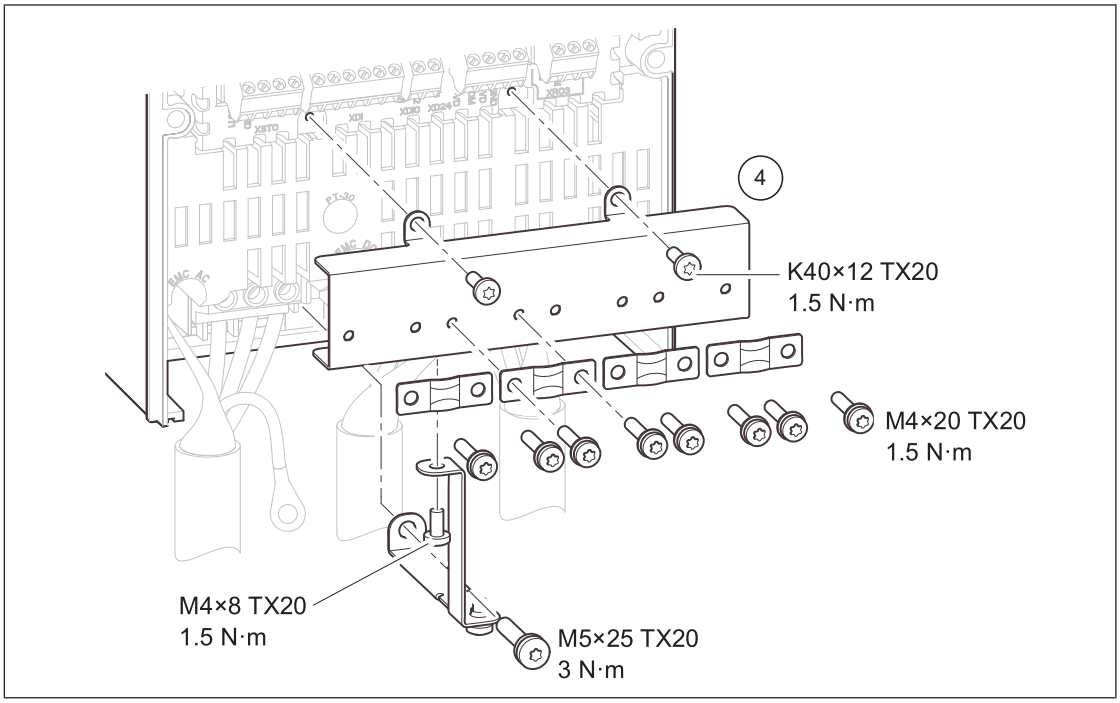

5. Connect the additional PE conductor of the input cable to the grounding shelf.

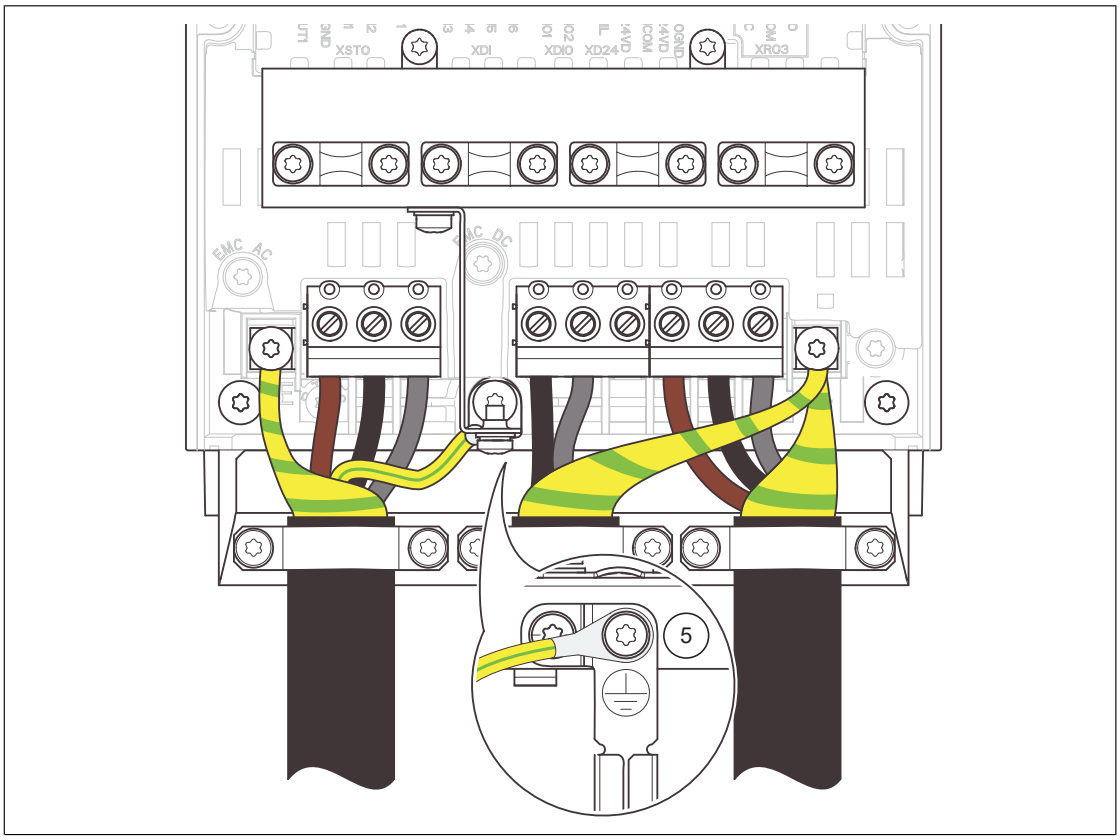

6. Go to section *Connecting the control cables – ACS880-01 frame R3 (page 42)*.

Connecting the control cables – ACS880-01 frame R3

1. Strip the cable ends and cut to suitable length (note the extra length of the grounding conductors).
2. Ground the outer shields of all control cables 360 degrees at the cabinet entry.
3. Secure the cables mechanically at the clamps.
4. Ground the pair-cable shields to the clamps. Leave the other end of the shields unconnected or ground them indirectly via a high-frequency capacitor with a few nanofarads, eg, 3.3 nF / 630 V.
5. Connect the conductors to the appropriate terminals of the control unit (see the default I/O connections in the hardware manual).
6. Wire the optional modules if included in the delivery.

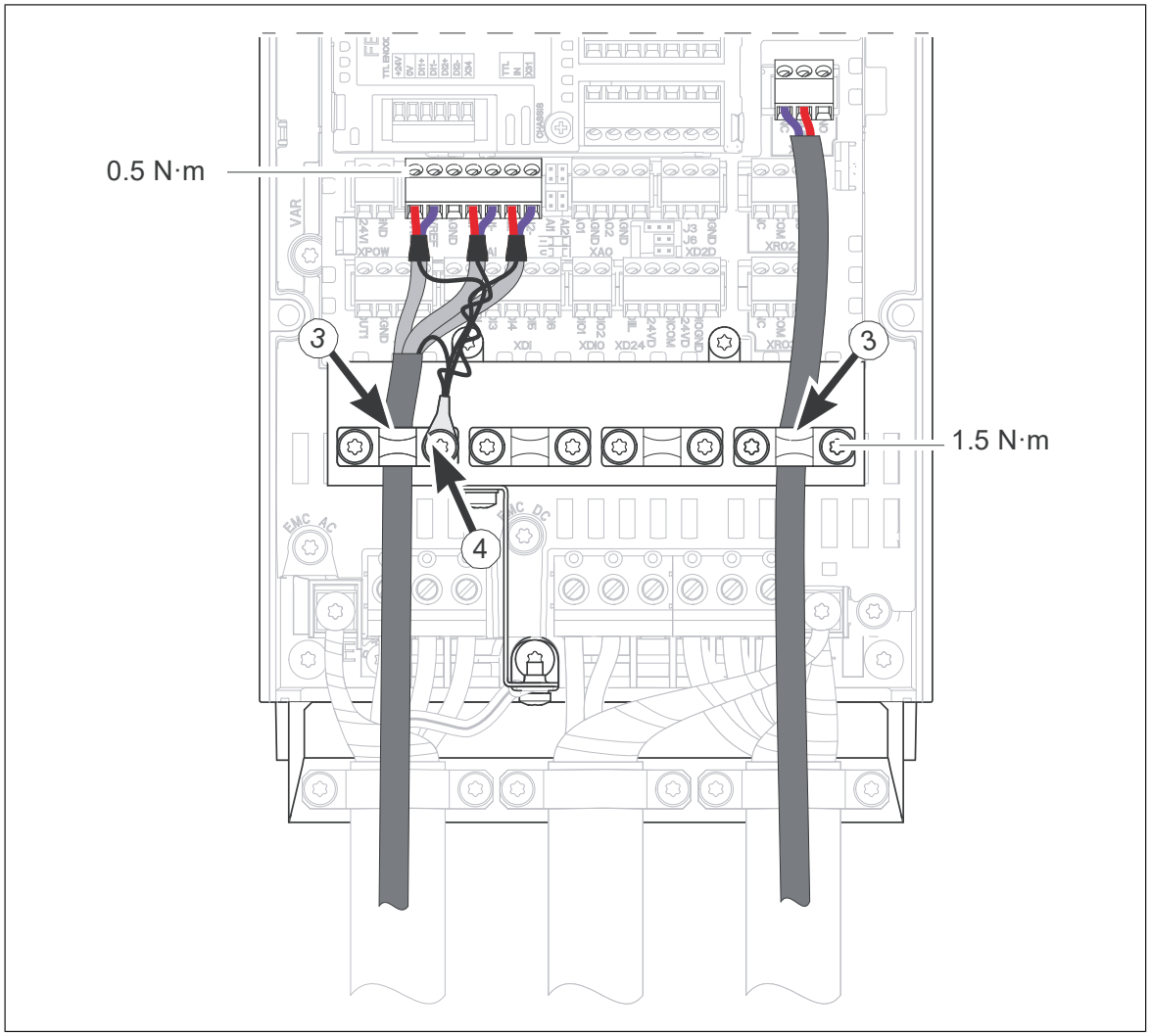

ACS880-01 frames R4 and R5

1. Install the control panel holder. Connect the wire.

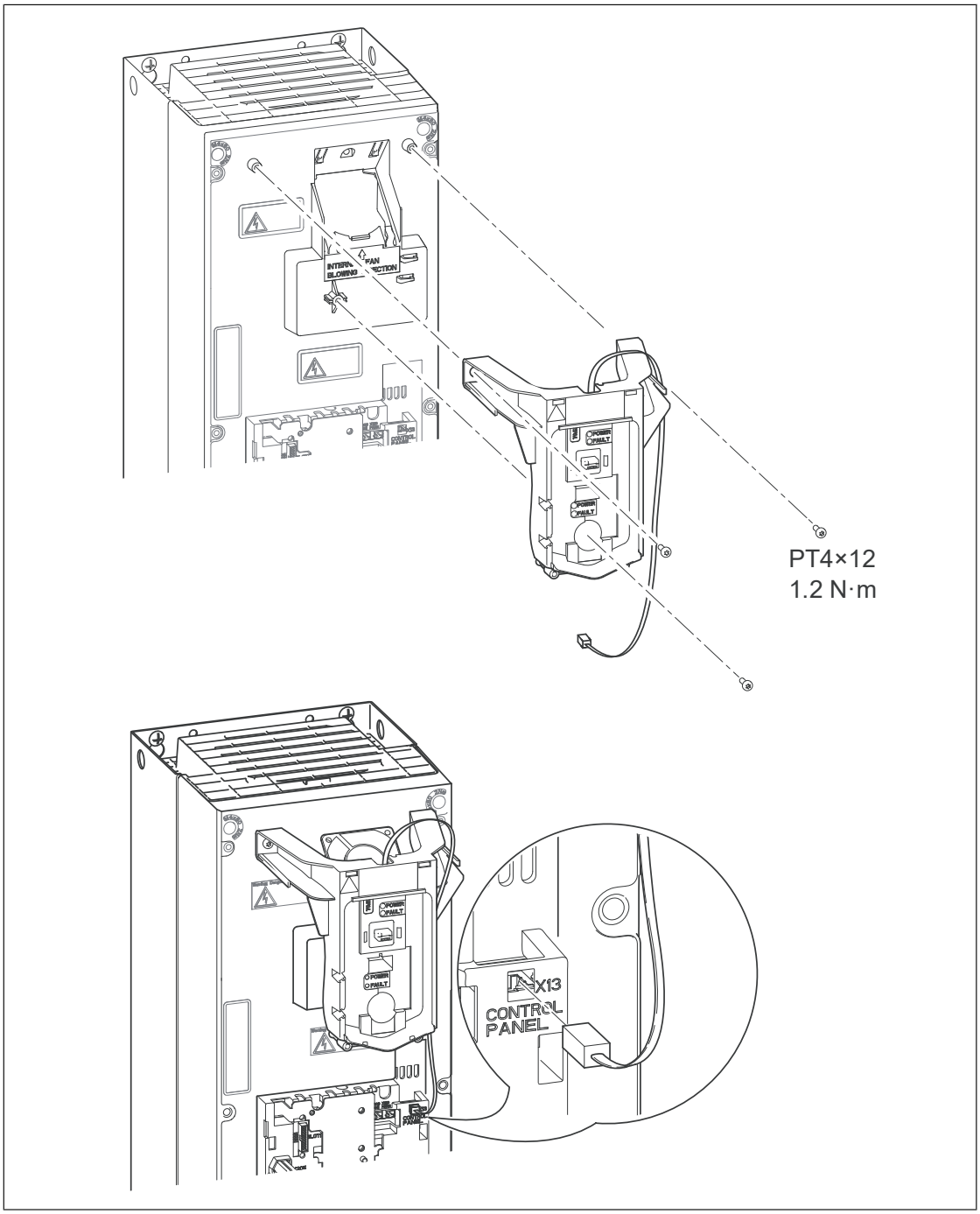

2. Remove the shroud on the power cable terminals by releasing the clips and lifting the shroud up from the sides with a screwdriver. Knock out holes in the shroud for the cables to be installed.

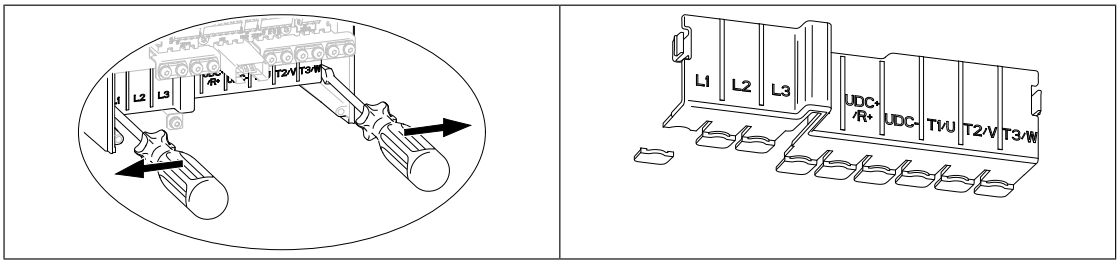

3. Attach the mechanical support shelf for the power cables to the drive module.

   Note: This shelf is not included with option +C135.

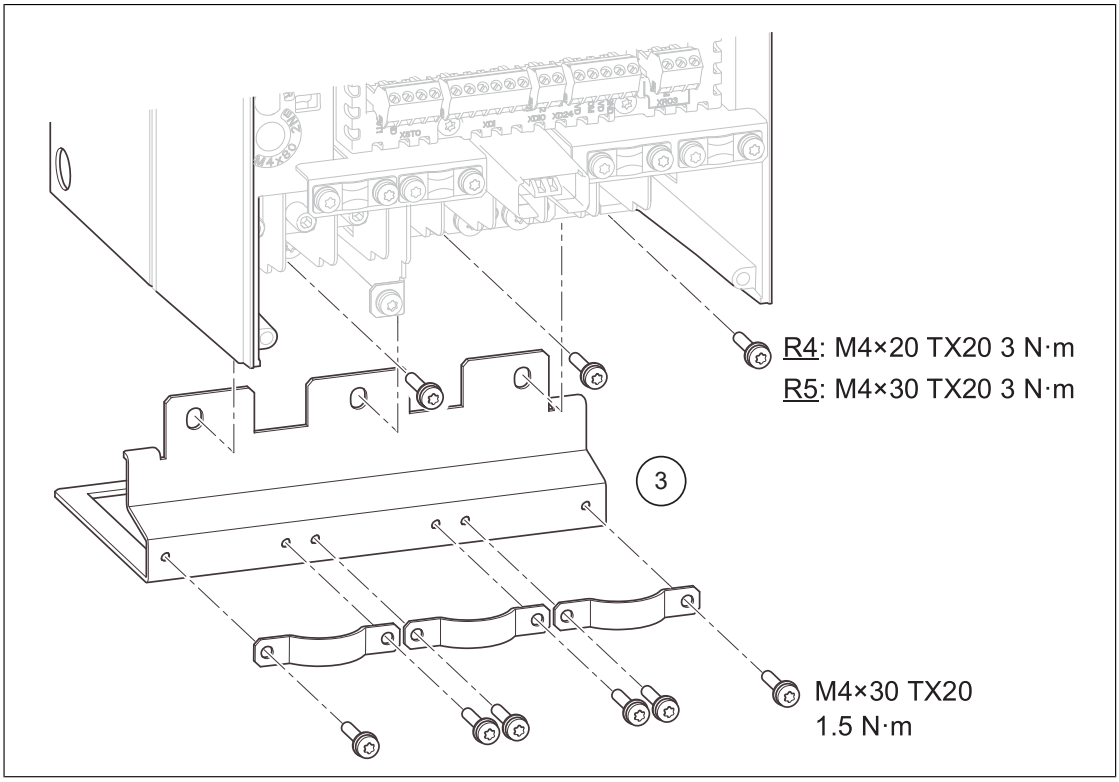

4. Attach the mechanical support shelf for the power cables to the mounting plate.

   Note: This shelf is not included with option +C135.

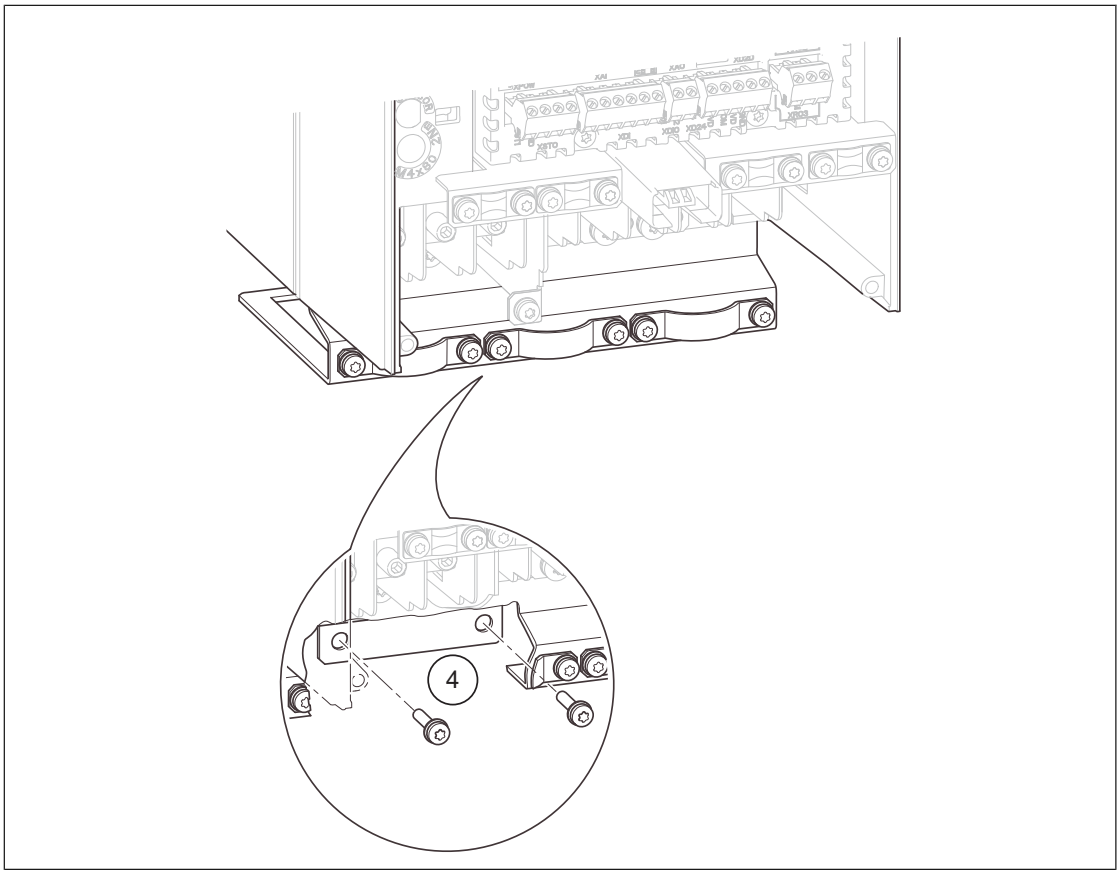

5. Connect the twisted shields of the power cables to the grounding terminals.
6. Attach the power cables with the clamps to the power cable support shelf or, with option +C135, to the flange bottom bracket.

7. Connect the phase conductors of the input cable to the L1, L2 and L3 terminals and the phase conductors of the motor cable to the T1/U, T2/V and T3/W terminals. Connect the brake resistor conductors (if present) to the R+ and R- terminals. Tighten the screws to the torque given in the figure below.

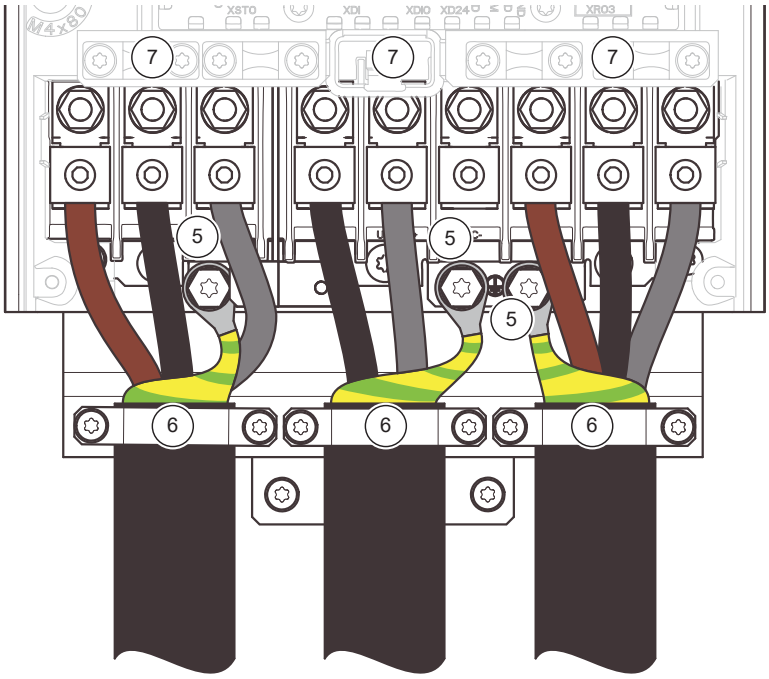

	L1, L2, L3, T1/U, T2/V, T3/W, R-, R+/UDC+, UDC	Grounding
R4	3.3 N·m	2.9 N·m
R5	5.6 N·m	2.9 N·m

8. Reinstall the shroud on the power terminals.

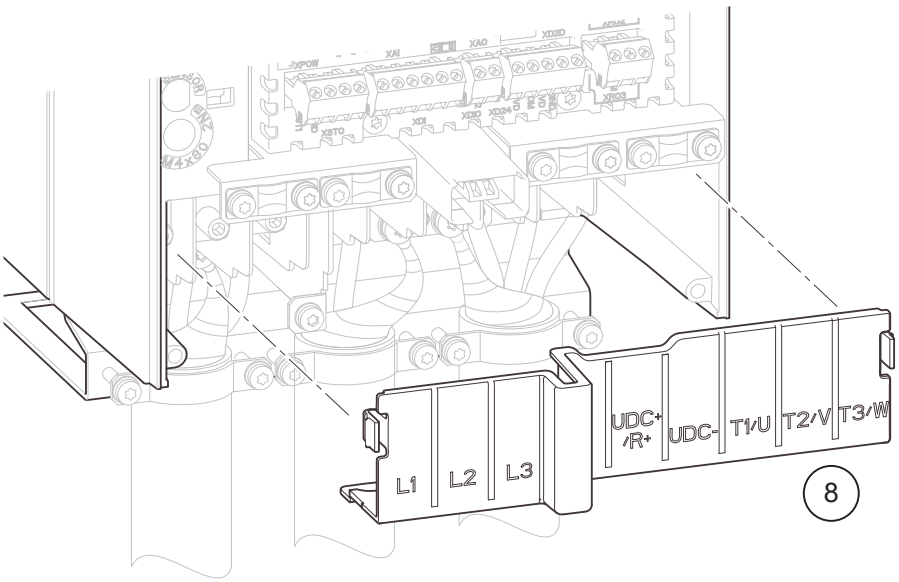

9. Go to section *Connecting the control cables – ACS880-01 frames R4 and R5 (page 47)*.

Connecting the control cables – ACS880-01 frames R4 and R5

1. Strip the cable ends and cut to suitable length (note the extra length of the grounding conductors).
2. Ground the outer shields of all control cables 360 degrees at the cabinet entry.
3. Secure the cables mechanically at the clamps.
4. Ground the pair-cable shields to the clamps. Leave the other end of the shields unconnected or ground them indirectly via a high-frequency capacitor with a few nanofarads, eg, 3.3 nF / 630 V.
5. Connect the conductors to the appropriate terminals of the control unit (see the default I/O connections in the hardware manual).
6. Wire the optional modules if included in the delivery.

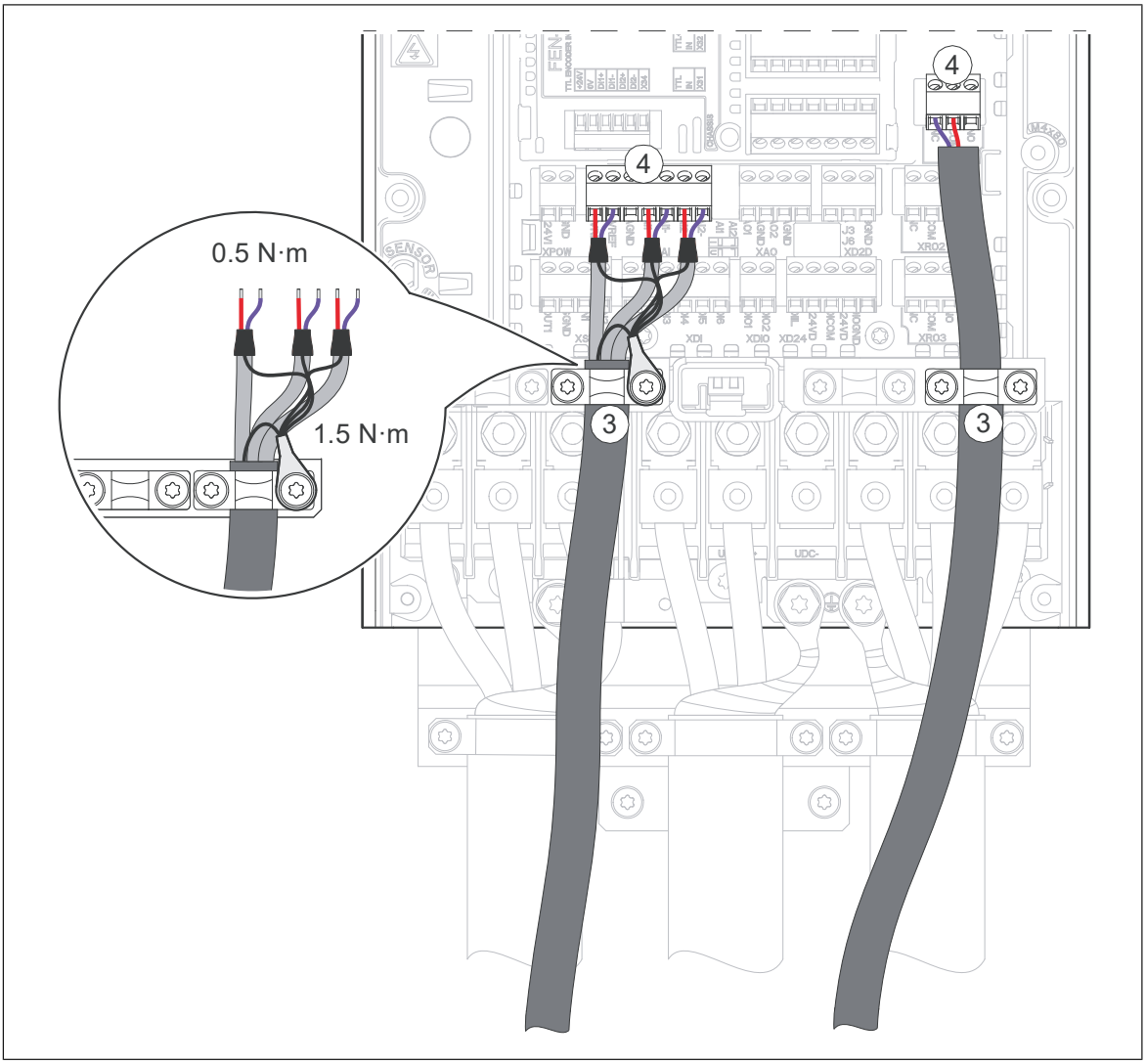

ACS880-01 frames R6 to R9

1. Remove the shroud on the power cable terminals by releasing the clips and lifting the shroud up from the sides with a screwdriver. Knock out holes in the shroud for the cables to be installed.

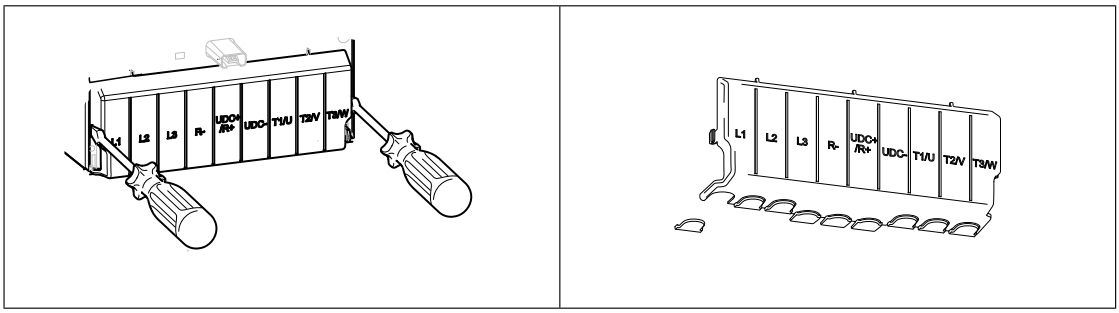

2. Attach the power cable shield grounding shelf to the drive module.

   Note: This shelf is not included with option +C135

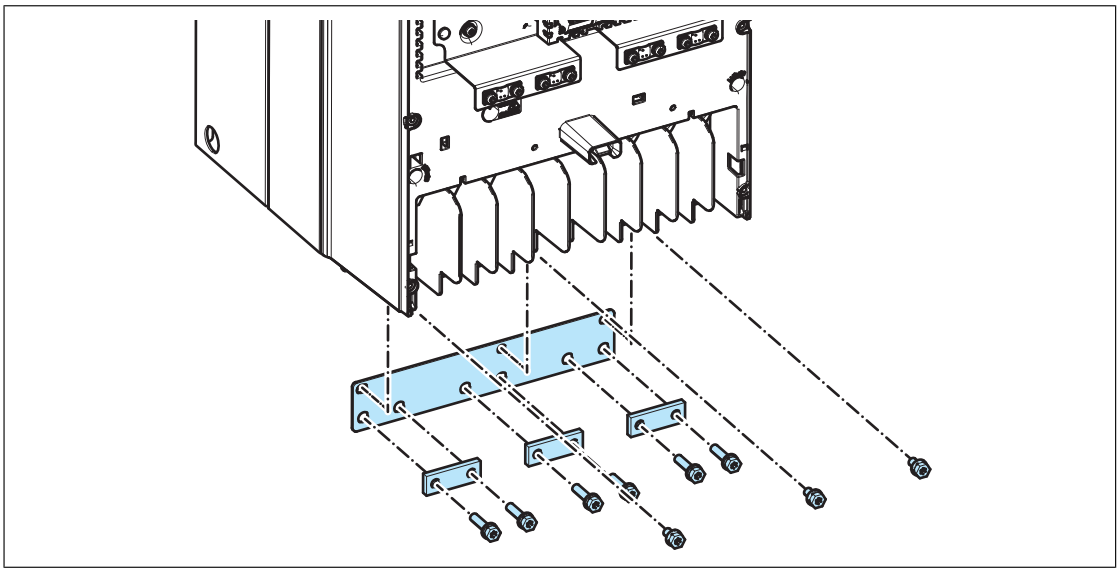

3. Connect the twisted shields of the power cables under the grounding clamps or with cable lugs under the clamp screws.

4. Connect the phase conductors of the input cable to the L1, L2 and L3 terminals and the phase conductors of the motor cable to the T1/U, T2/V and T3/W terminals. Connect the brake resistor conductors (if present) to the R+ and R- terminals. Tighten the screws to the torque given in the figure below.

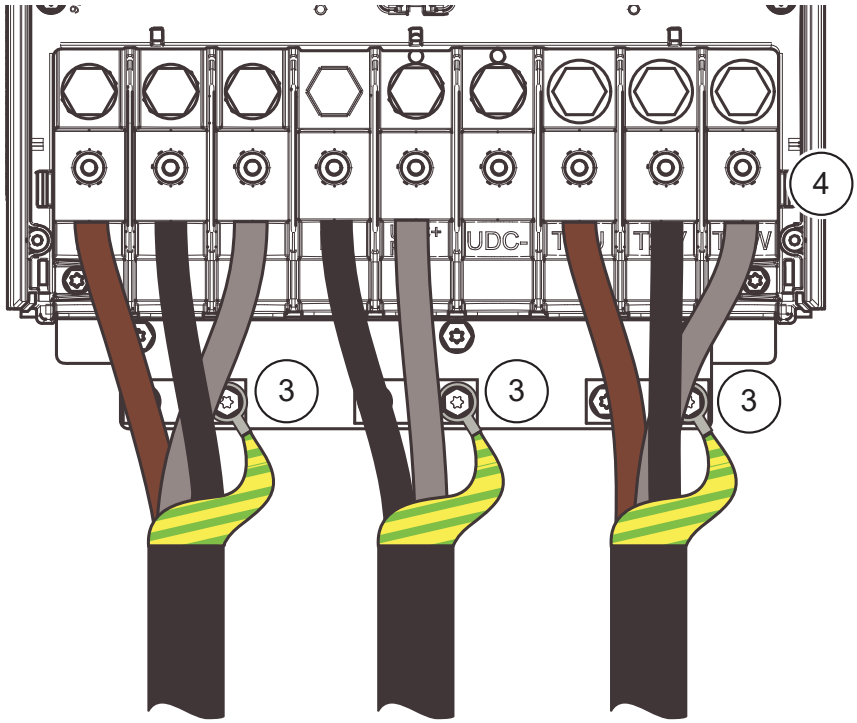

	L1, L2, L3, T1/U, T2/V, T3/W	R-, R+/UDC+, UDC-	Grounding
R6	30 N·m	20 N·m	9.8 N·m
R7	40 N·m (30 N·m*)	30 N·m	9.8 N·m
R8	40 N·m	40 N·m	9.8 N·m
R9	70 N·m	70 N·m	9.8 N·m

*525…690 V

5. Reinstall the shroud on the power cable terminals

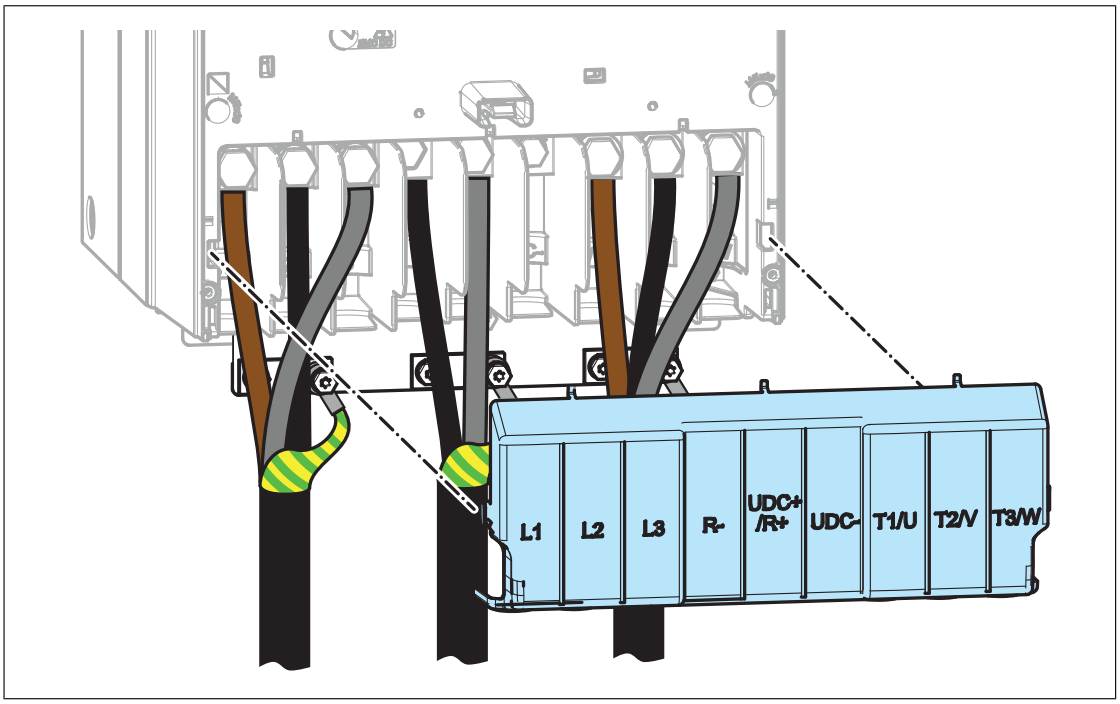

6. Go to section *Connecting the control cables – ACS880-01 frames R6 to R9 (page 50)*.

Connecting the control cables – ACS880-01 frames R6 to R9

1. Strip the cable ends and cut to suitable length (note the extra length of the grounding conductors).
2. Ground the outer shields of all control cables 360 degrees at the cabinet entry.
3. Secure the cables mechanically at the clamps.
4. Ground the pair-cable shields to the clamps. Leave the other end of the shields unconnected or ground them indirectly via a high-frequency capacitor with a few nanofarads, eg, 3.3 nF / 630 V.
5. Connect the conductors to the appropriate terminals of the control unit (see the default I/O connections in the hardware manual).
6. Wire the optional modules if included in the delivery.

6

Installation checklist

Contents of this chapter

This chapter contains a list for checking the mechanical and electrical installation of the drive.

Checklist

Check the mechanical and electrical installation of the drive before start-up. Go through the checklist together with another person.

WARNING!
Obey the safety instructions. If you ignore them, injury or death, or damage to the equipment can occur. Do the steps in section *Electrical safety precautions Electrical safety precautions* before you start the work.

Check that …	☑
Cabinet construction	
The drive module is fastened properly to the cabinet.	☐
Mechanical joints are tightened and not broken.	☐
Parts are clean and painted surfaces not scratched. The cabinet frame and parts which are in metal to metal contact with the frame (for example seams, component fixing points on assembly plates, back of control unit mounting plate) are not finished with non-conducting paint or material.	☐
Degree of protection (IPxx)	☐
Drive option modules and other components	
Type and number of option modules and other equipment is correct. Option modules and other equipment are not damaged.	☐
Option modules and terminals are labeled correctly.	☐

Check that …	☑
The placement of optional modules and other equipment inside the cabinet and on the cabinet door is correct.	☐
The mounting of optional modules and other equipment is correct.	☐
Internal cabling of the cabinet assembly	
Main circuit: • AC supply input cabling is ok. • AC output cabling is ok. • Supply for brake resistor (if used) is ok.	☐
Cable types, cross-sections, colors and optional markings are correct.	☐
Cabling is not susceptible to interference. Check the twisting of cables and cable routes.	☐
Connection of cables to devices, terminal blocks and drive module circuit boards: • Cables are connected to terminals tight enough by pulling the cable. • Cable termination on terminals chaining is done correctly. • Bare conductors are not too far outside the terminal causing an insufficient clearance or loss of shielding against contact. • The control unit is wired properly to the drive module. • The control panel cable is connected properly.	☐
Cables are not lying against sharp edges or bare live parts. Bending radius of fiber optic cables is at least 3.5 cm (1.38 in).	☐
The type, markings, insulation plates and cross connections of terminal blocks are correct.	☐
Grounding and protection	
The grounding colors, cross-section and grounding points of modules and other equipment match the circuit diagrams. No long routes for pigtails.	☐
Connections of PE cables and busbars are tight enough. Pull the cable to test that it does not loosen. No long routes for pigtails.	☐
Doors equipped with electrical equipment are grounded. No long grounding routes. From EMC standpoint best result is achieved with a flat copper braid.	☐
Fans that can be touched are shrouded.	☐
Live parts inside the doors are protected against direct contact to at least IP2x.	☐
Labels	
The type designation labels and warning and instruction stickers are made according to the local regulations and placed correctly.	☐
Switches and doors	
Mechanical switches, main disconnecting switch and cabinet doors function properly.	☐
Installation of the cabinet	
The drive cabinet has been attached to floor and also from top to the wall or roof.	☐
The ambient operating conditions agree with the specifications given in chapter Technical data.	☐
The cooling air will flow freely in and out of the drive cabinet, and air recirculation inside the cabinet will not be possible (air baffle plates are on place).	☐
<u>If the drive module has been stored over one year:</u> The electrolytic DC capacitors in the DC link of the drive have been reformed.	☐
There is an adequately sized protective ground conductor between the drive and the switchboard.	☐
There is an adequately sized protective earth ground conductor between the motor and the drive.	☐
All protective ground conductors have been connected to the appropriate terminals and the terminals have been tightened. (Pull the conductors to check.)	☐
The enclosures of the equipment in the cabinet have proper galvanic connection to the cabinet protective earth (ground) busbar; The connection surfaces at the fastening points are bare (unpainted) and the connections are tight, or separate grounding conductors have been installed.	☐

Check that …	☑
The supply voltage matches the nominal input voltage of the drive. Check the type designation label.	☐
The input power cable has been connected to the appropriate terminals, the phase order is right, and the terminals have been tightened. (Pull on the conductors to check.)	☐
Appropriate AC fuses and a main disconnector have been installed.	☐
The motor cable has been connected to the appropriate terminals, the phase order is right, and the terminals have been tightened. (Pull on the conductors to check.)	☐
The brake resistor (if present) has been connected to the appropriate terminals, and the terminals have been tightened. (Pull on the conductors to check.)	☐
The motor cable (and brake resistor cable, if present) has been routed away from other cables.	☐
No power factor compensation capacitors have been connected to the motor cable.	☐
The control cables (if any) have been connected to the appropriate terminals, and the terminals have been tightened. (Pull on the conductors to check.)	☐
If a drive bypass connection will be used: The direct-on-line contactor of the motor and the drive output contactor are either mechanically or electrically interlocked, ie, cannot be closed simultaneously.	☐
There are no tools, foreign objects or dust from drilling inside the drive.	☐
All shrouds and cover of the motor connection box are in place. Cabinet doors have been closed.	☐
The motor and the driven equipment are ready for start.	☐

7

Technical data

Contents of this chapter

This chapter contains some technical data of the drive module. For other data, see the hardware manual.

Dimensions, weights and free space requirements

ACS880-01… +P940								
Frame	IP 20				UL Type Open			
	Height mm	Width mm	Depth mm	Weight kg	Height in.	Width in.	Depth in.	Weight lb
R1	376	155	226	5.7	14.80	6.10	8.88	12
R2	376	155	249	7.2	14.80	6.10	9.78	16
R3	436	173	256	9.4	17.17	6.81	10.09	21
R4	563	203	333	16.1	22.17	7.99	13.12	36
R5	653	203	333	19.3	25.70	7.99	13.12	43
R6	593	252	357	38.8	22.35	9.92	14.07	85
R7	645	284	365	47.6	25.39	11.18	14.35	105
R8	724	300	386	58.6	28.0	11.81	15.21	129
R9	723	380	413	85.2	28.46	14.96	16.27	188

ACS880-01… +P944								
Frame	IP 20				UL Type Open			
	Height mm	Width mm	Depth mm	Weight kg	Height in.	Width in.	Depth in.	Weight lb
R1	376	155	226	6.1	14.80	6.10	8.91	13

ACS880-01… +P944								
Frame	**IP 20**				**UL Type Open**			
	Height mm	**Width mm**	**Depth mm**	**Weight kg**	**Height in.**	**Width in.**	**Depth in.**	**Weight lb**
R2	376	155	249	7.6	14.80	6.10	9.82	17
R3	436	173	261	9.9	17.17	6.81	10.29	22
R4	563	203	274	16.8	22.17	7.99	10.80	37
R5	653	203	274	20.2	25.70	7.99	10.77	45
R6	593	252	357	39.8	22.35	9.92	14.07	88
R7	645	284	365	48.6	25.39	11.18	14.35	107
R8	724	300	386	59.8	28.0	11.81	15.21	132
R9	723	380	413	86.6	28.46	14.96	16.27	191

ACS880-11… and ACS880-31… +P940								
Frame	**IP 20**				**UL Type Open**			
	Height mm	**Width mm**	**Depth mm**	**Weight kg**	**Height in.**	**Width in.**	**Depth in.**	**Weight lb**
R3	490	203	349	18.3	19.29	7.99	13.78	40
R6	771	252	358	59	30.35	9.92	14.09	103
R8	964	300	430	109	37.95	11.81	16.94	240

For more information on dimensions, see the dimension drawings.

200 mm (7.87 in.) free space is required at top of the drive module.

300 mm (11.81 in.) free space is required at bottom of the drive module.

Degree of protection

IP20 (UL Type Open).

8

Dimension drawings – ACS880-01

Contents of this chapter

This chapter contains dimension drawings of the ACS880-01 drive module.

R1 – Option +P940 (IP20, UL Type Open)

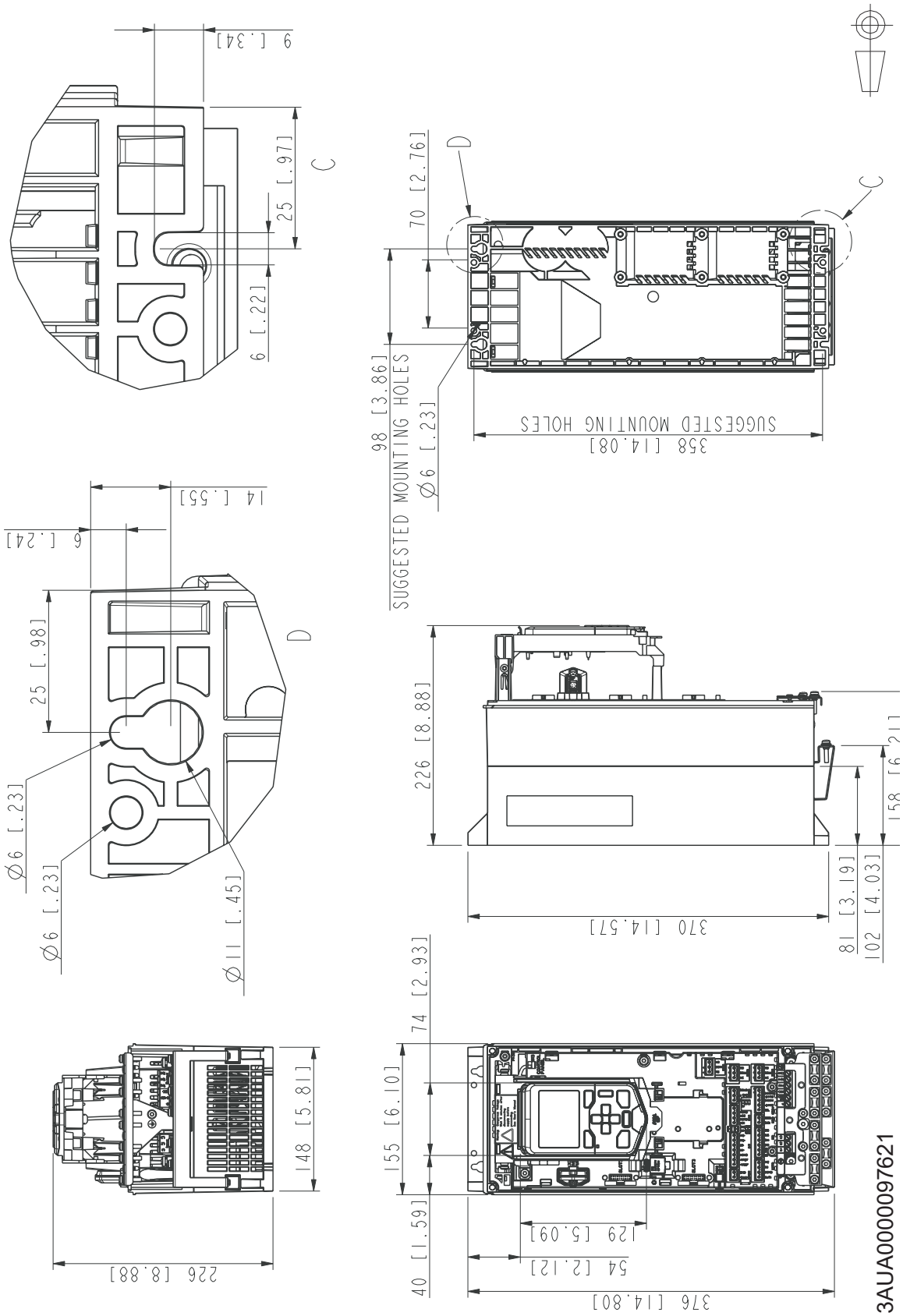

R1 – Option +P944 (IP20, UL Type Open)

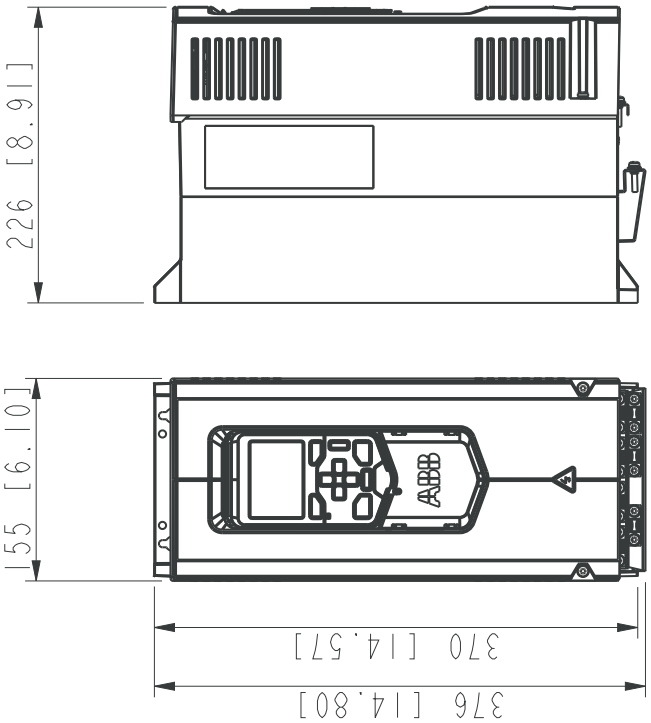

3AUA0000097621

R2 – Option +P940 (IP20, UL Type Open)

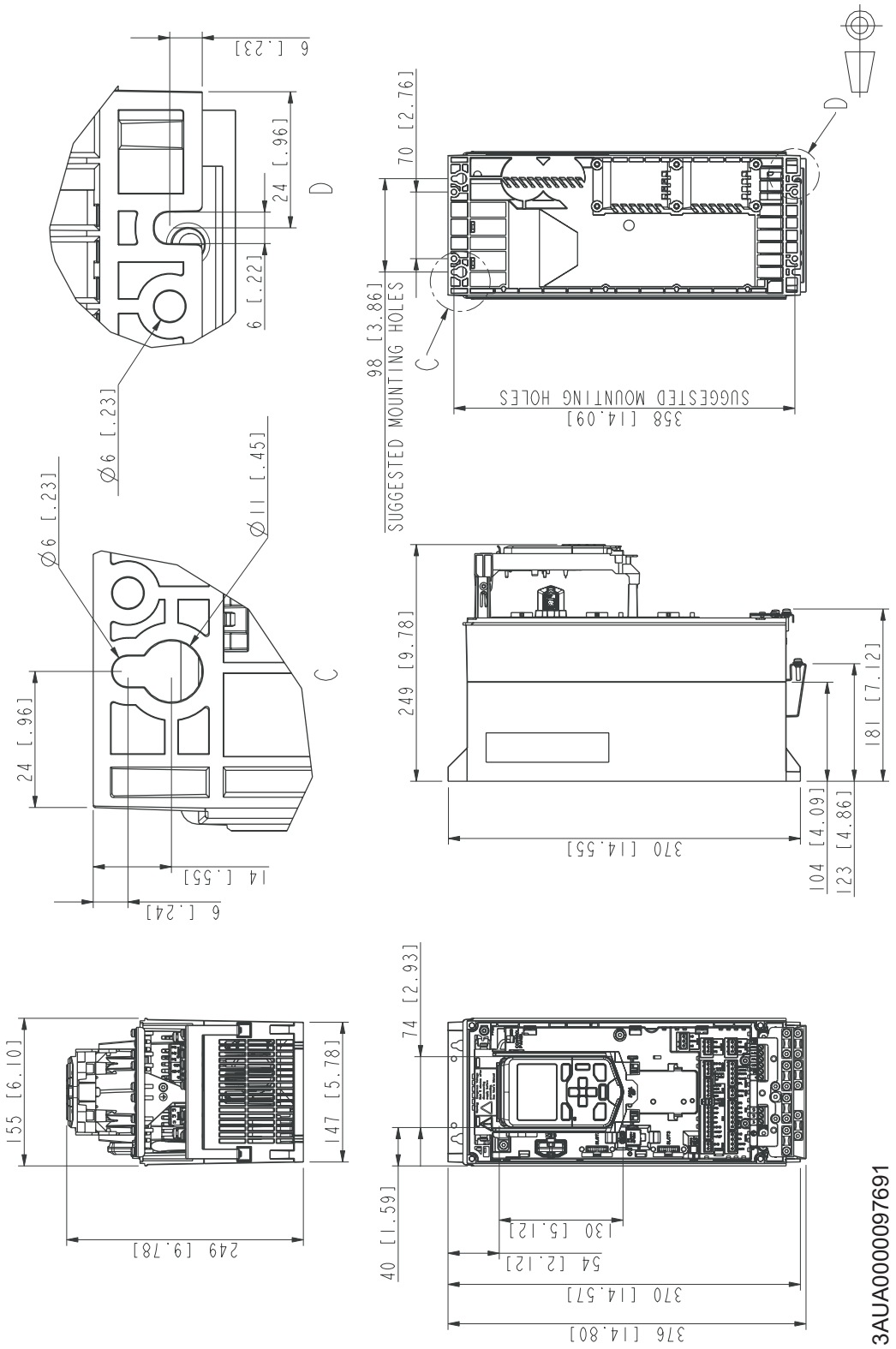

R2 – Option +P944 (IP20, UL Type Open)

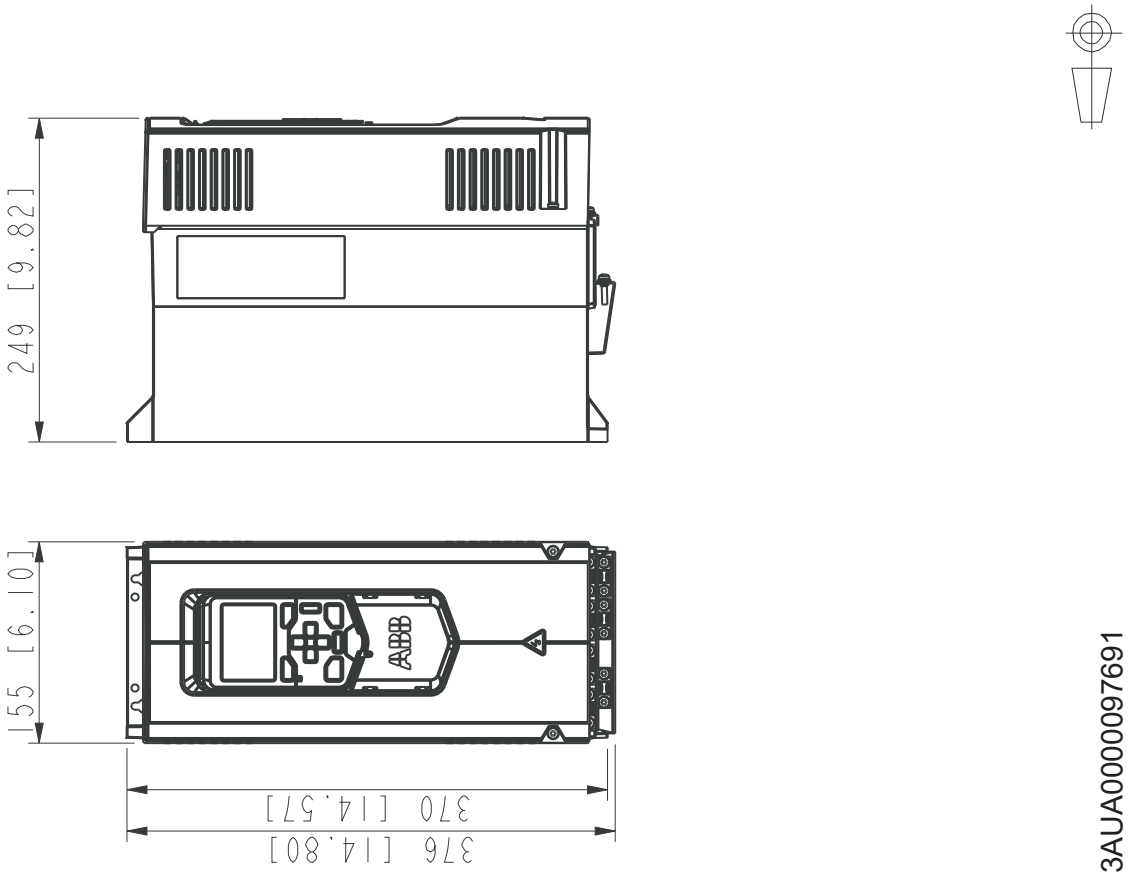

R3 – Option +P940 (IP20, UL Type Open)

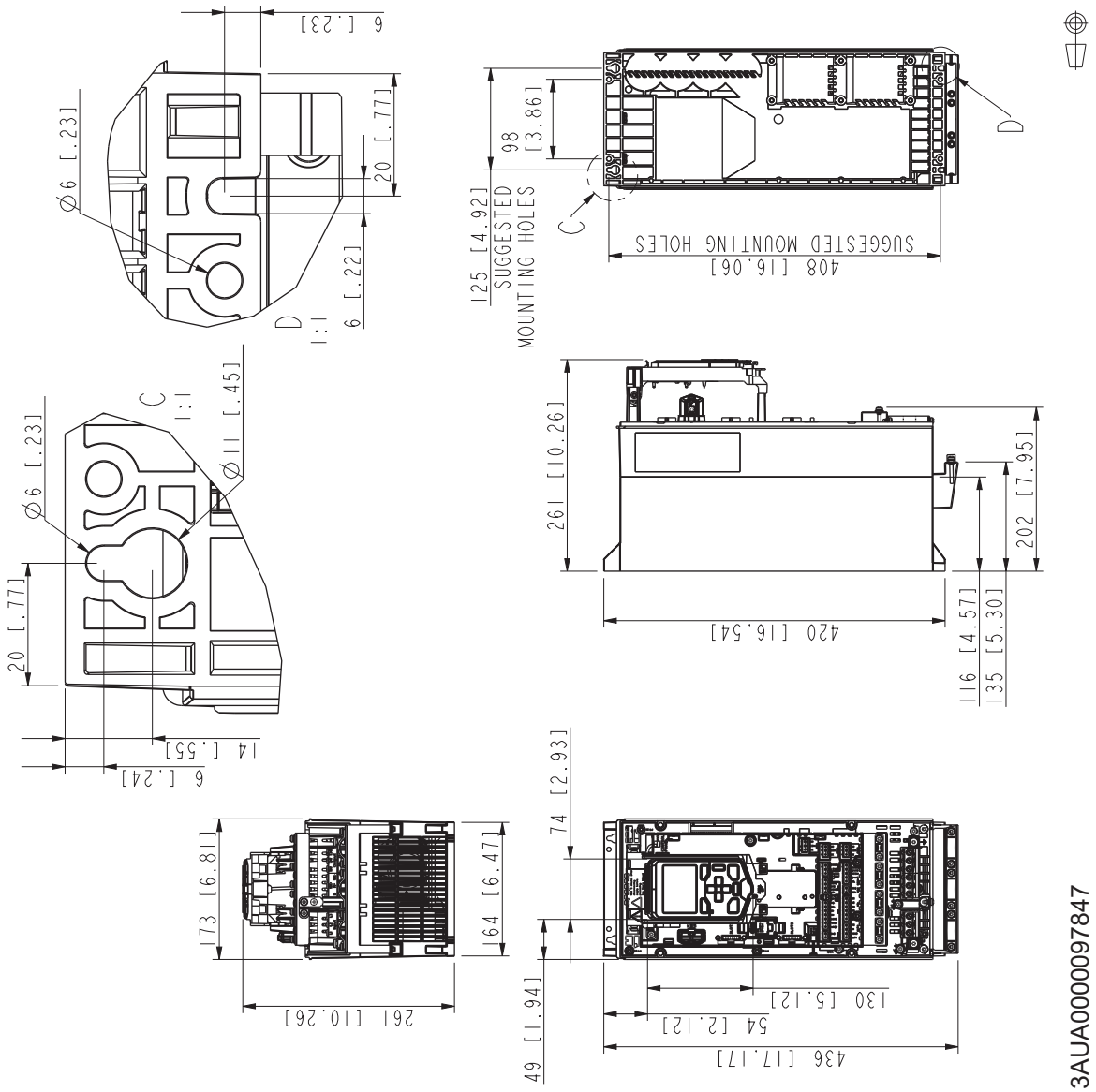

R3 – Option +P944 (IP20, UL Type Open)

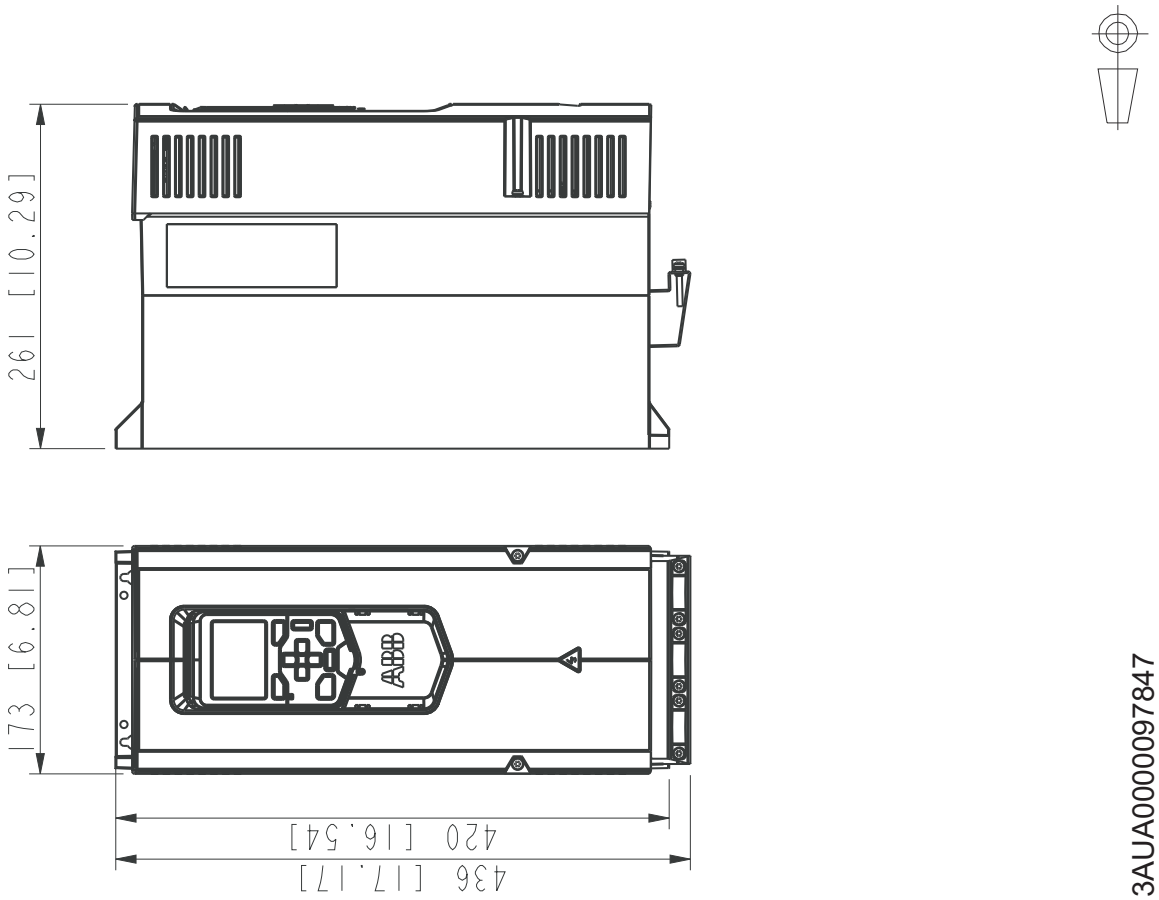

R4 – Option +P940 (IP20, UL Type Open)

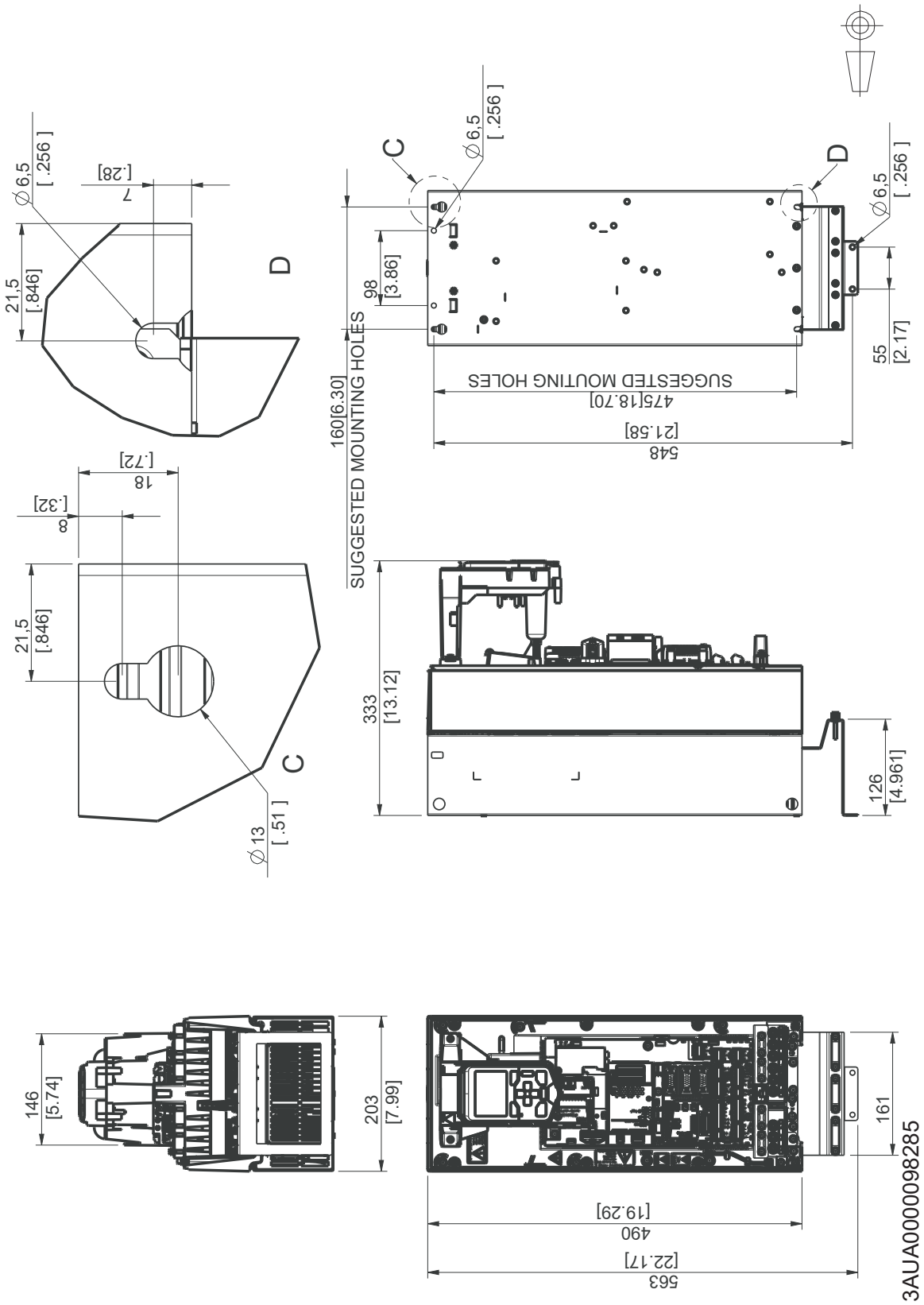

R4 – Option +P944 (IP20, UL Type Open)

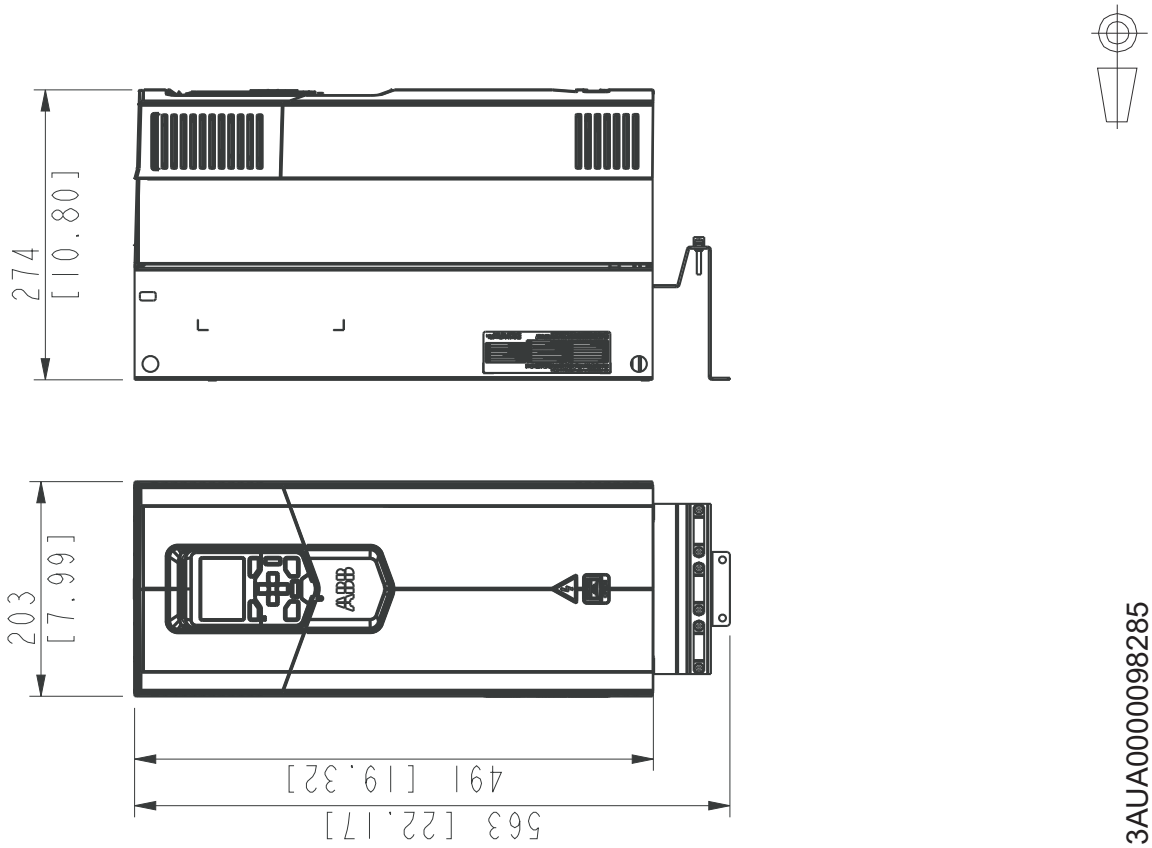

R5 – Option +P940 (IP20, UL Type Open)

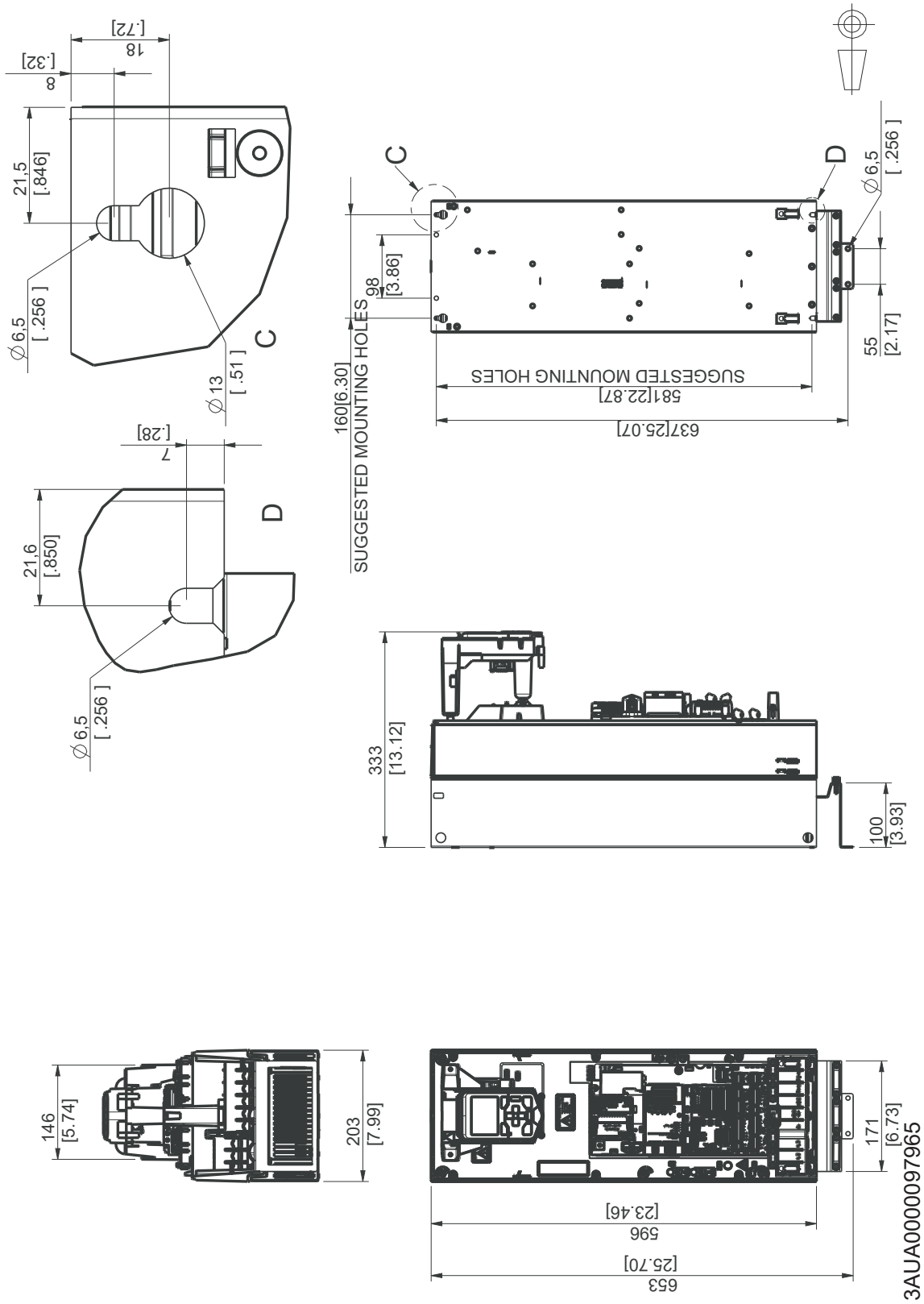

R5 – Option +P944 (IP20, UL Type Open)

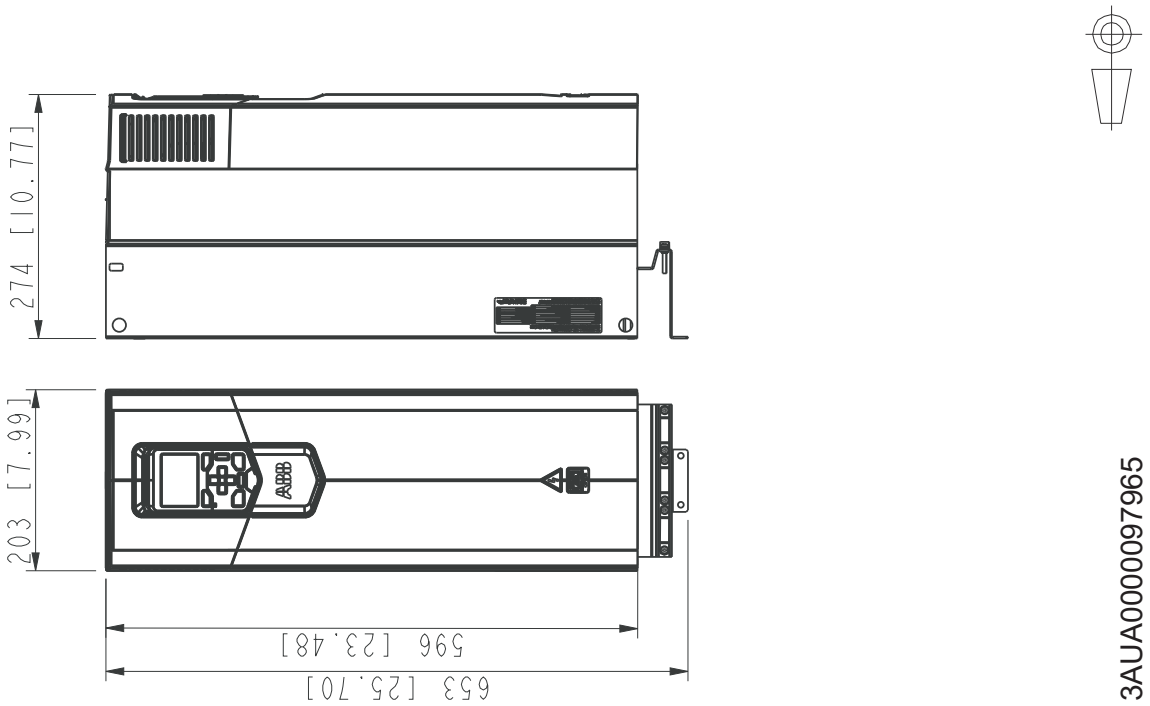

R6 – Option +P940 (IP20, UL Type Open)

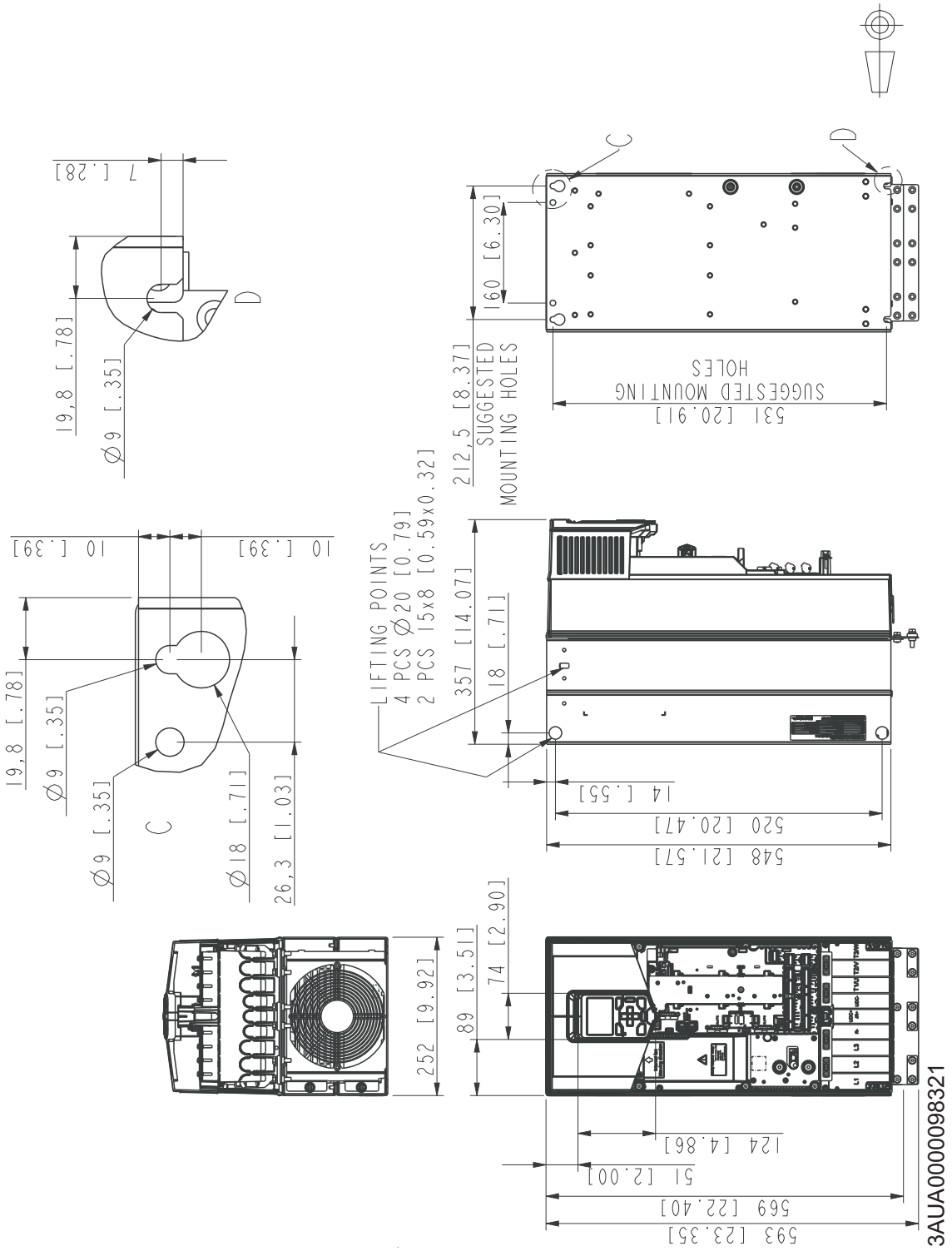

R6 – Option +P944 (IP20, UL Type Open)

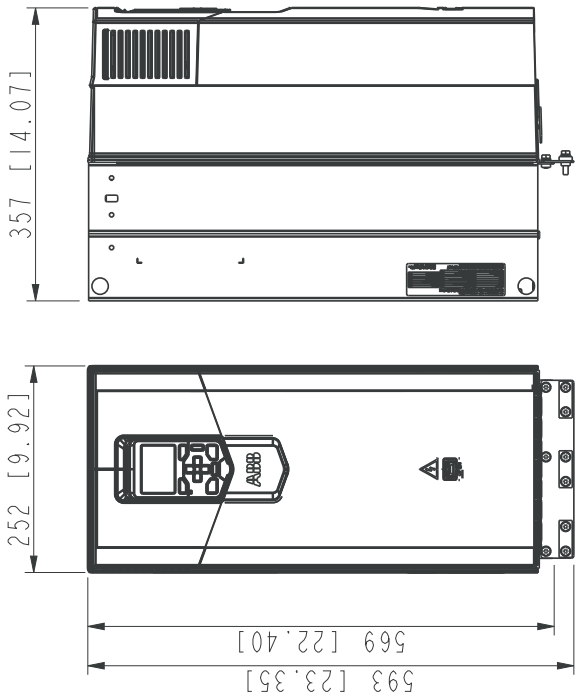

3AUA0000098321

R7 – Option +P940 (IP20, UL Type Open)

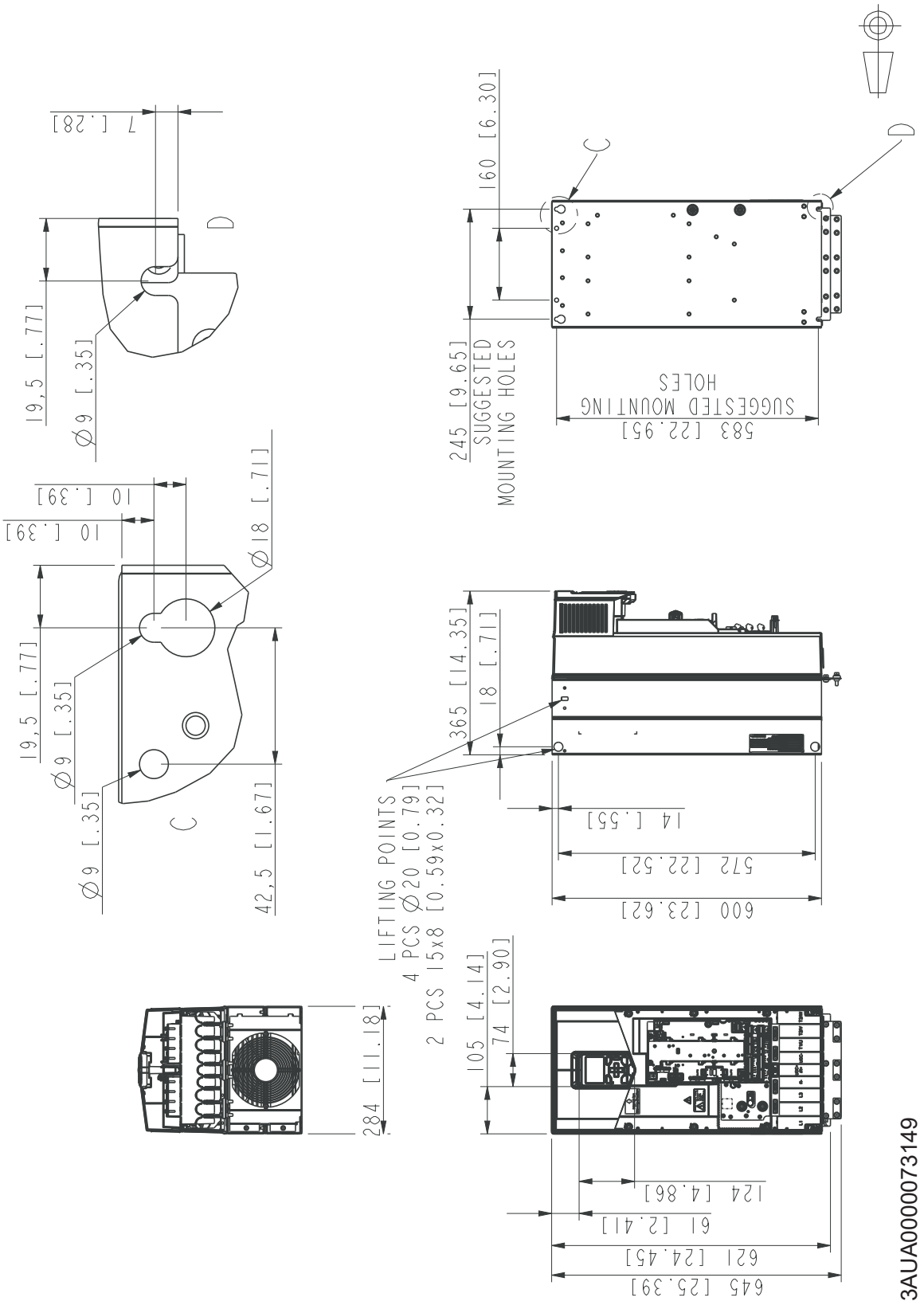

R7 – Option +P944 (IP20, UL Type Open)

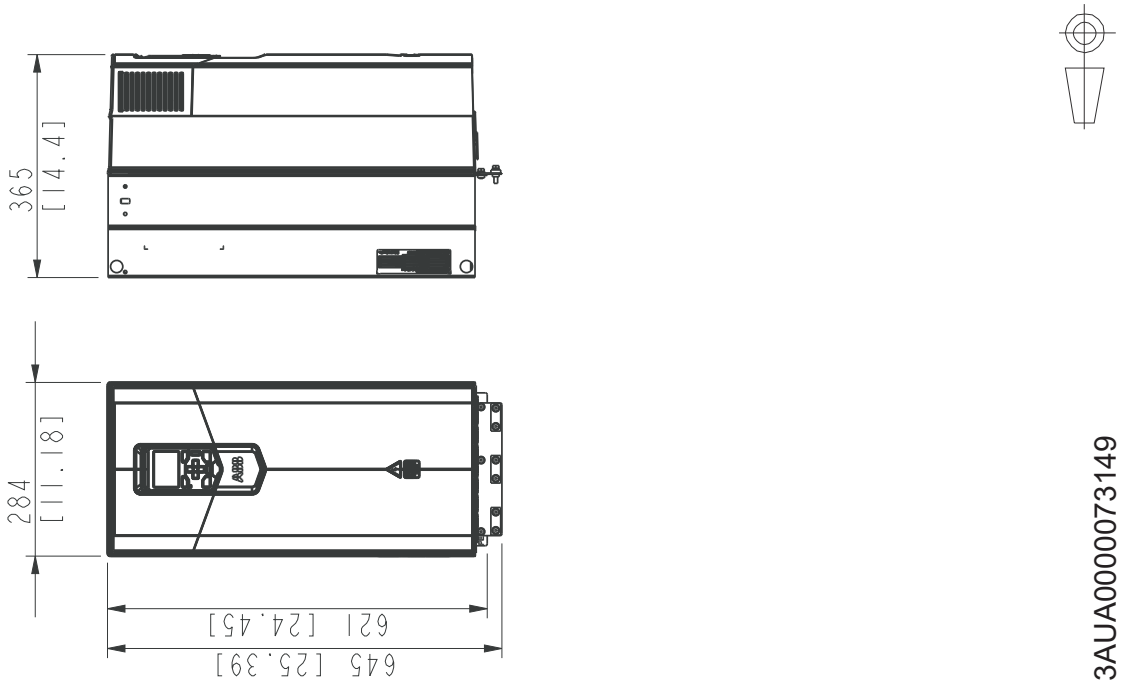

R8 – Option +P940 (IP20, UL Type Open)

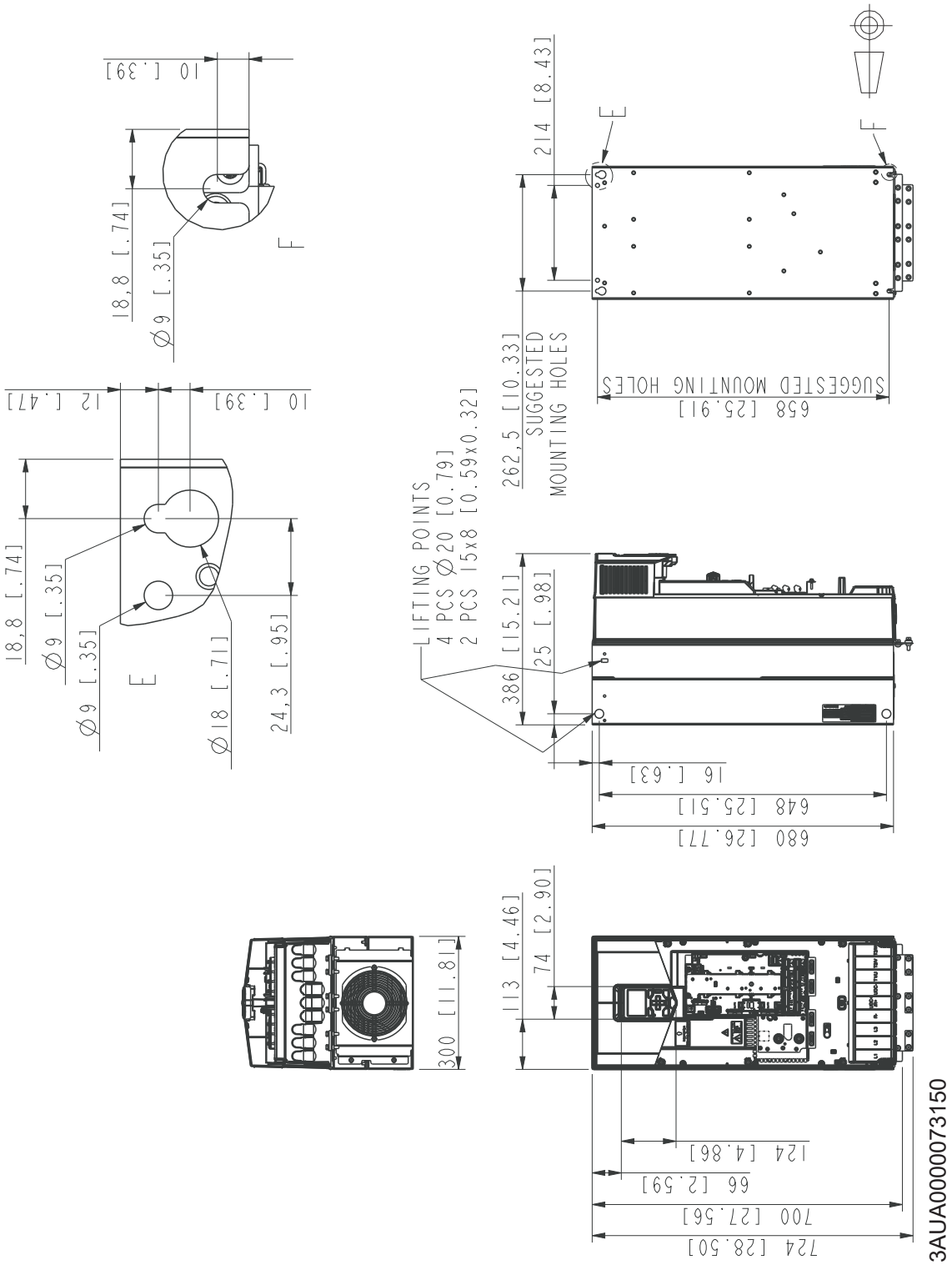

R8 – Option +P944 (IP20, UL Type Open)

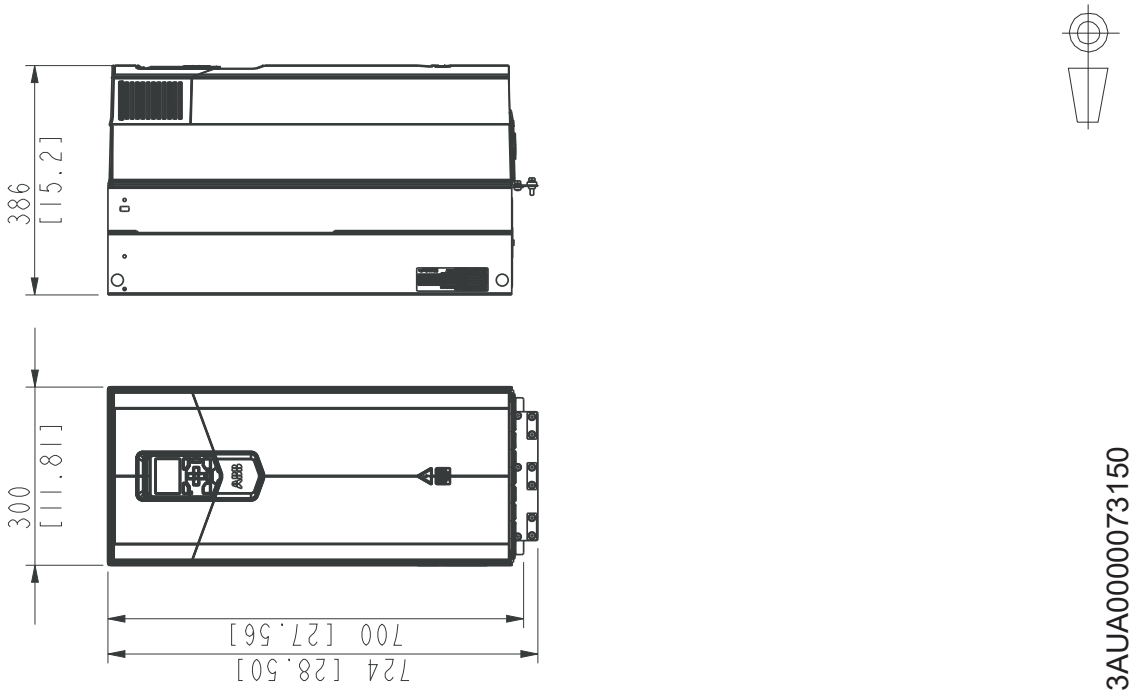

R9 – Option +P940 (IP20, UL Type Open)

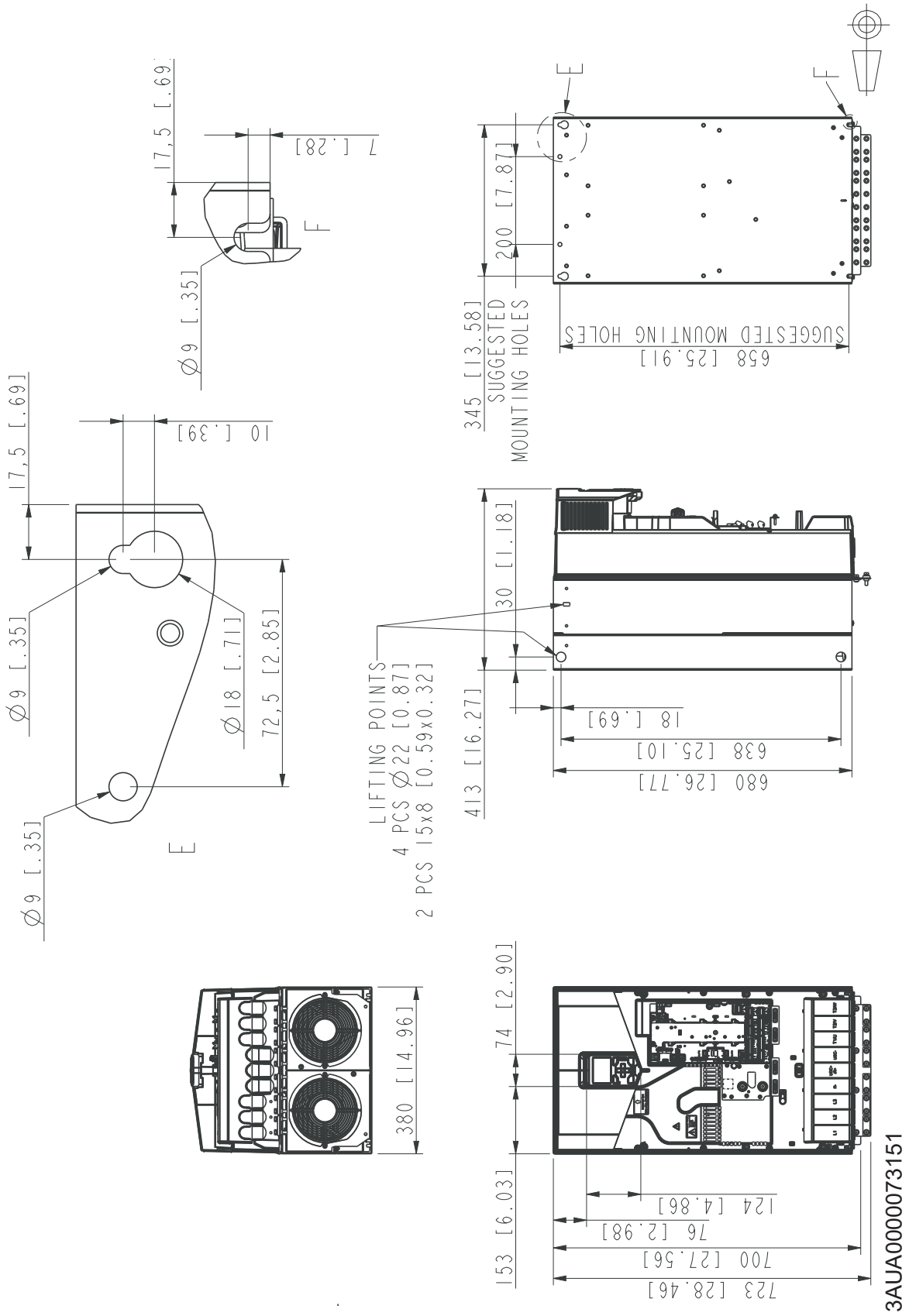

R9 – Option +P944 (IP20, UL Type Open)

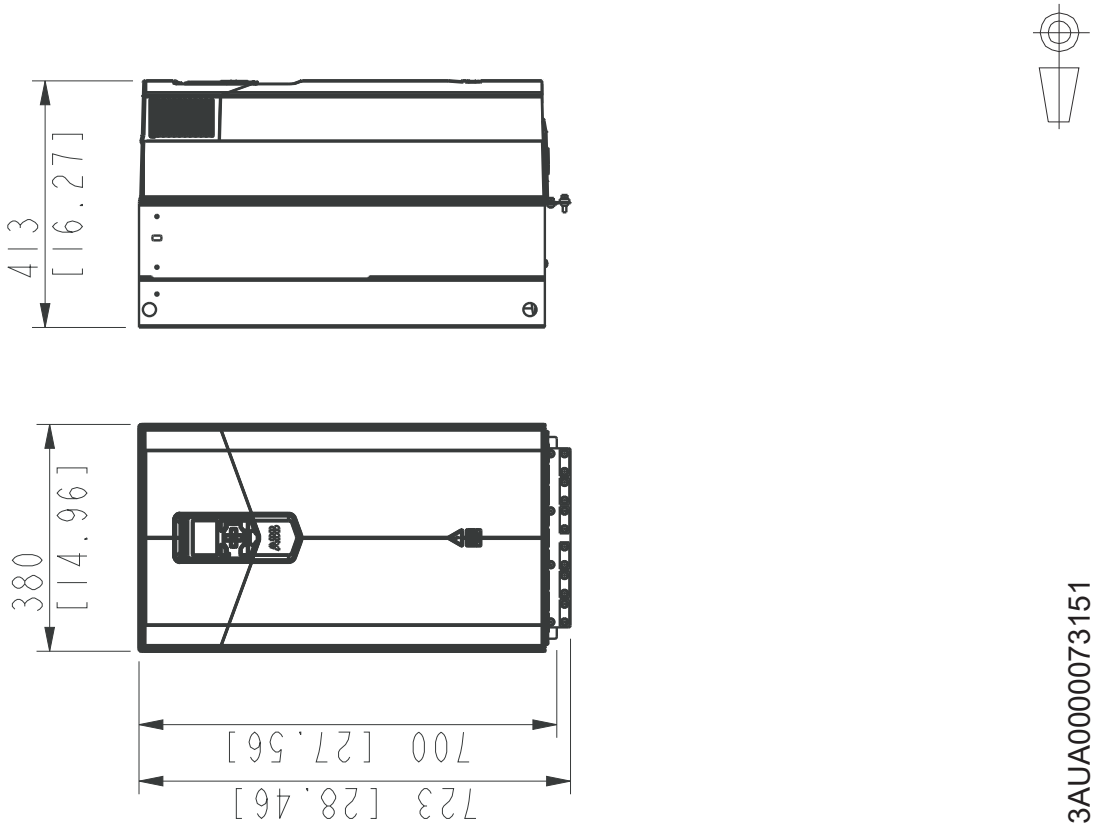

9

Dimension drawings – ACS880-11 and ACS880-31

Contents of this chapter

This chapter contains dimension drawings of ACS880-11 and ACS880-31 drive modules.

R3 – Option +P940 (IP20, UL Type Open)

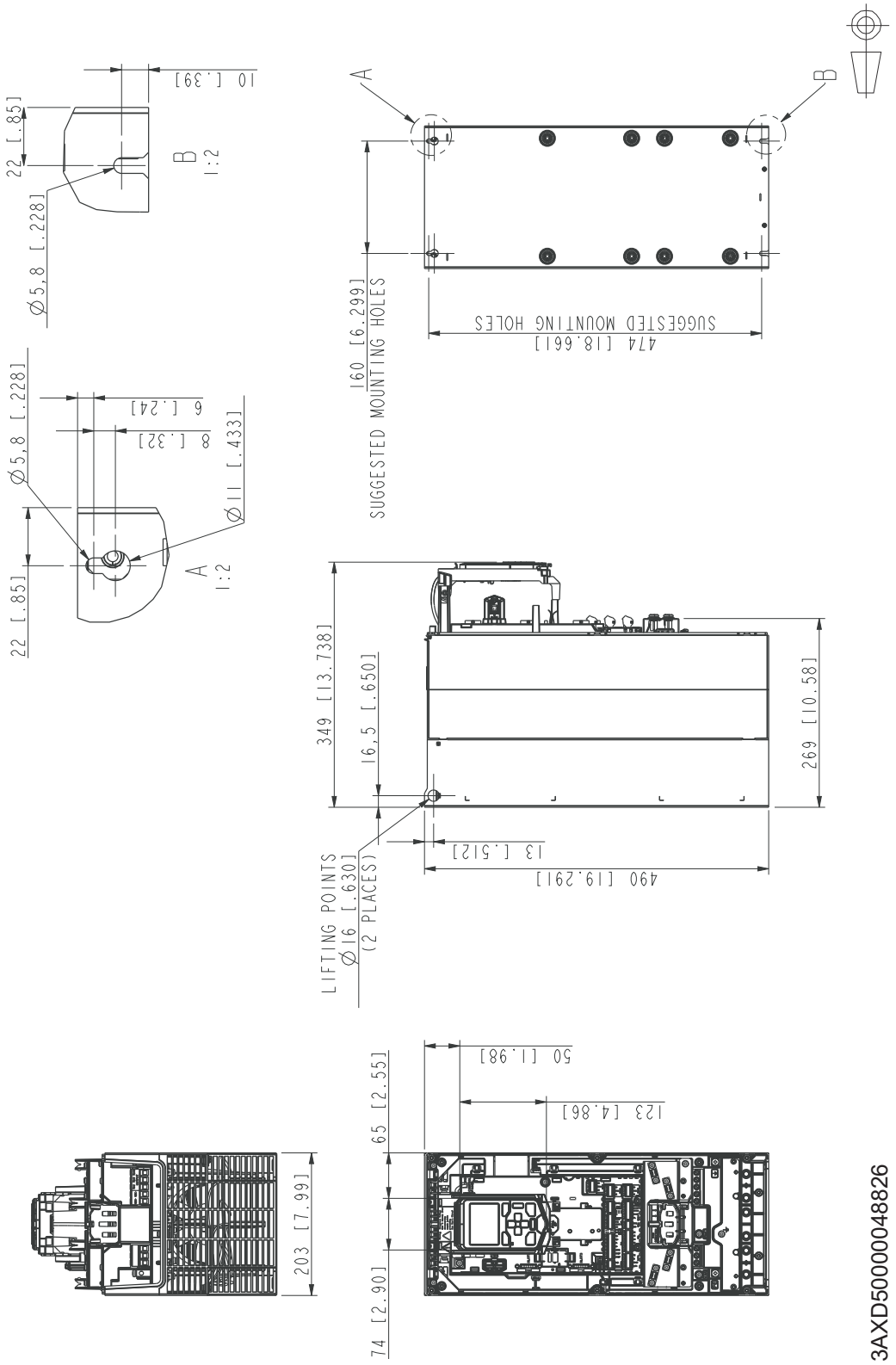

R6 – Option +P940 (IP20, UL Type Open)

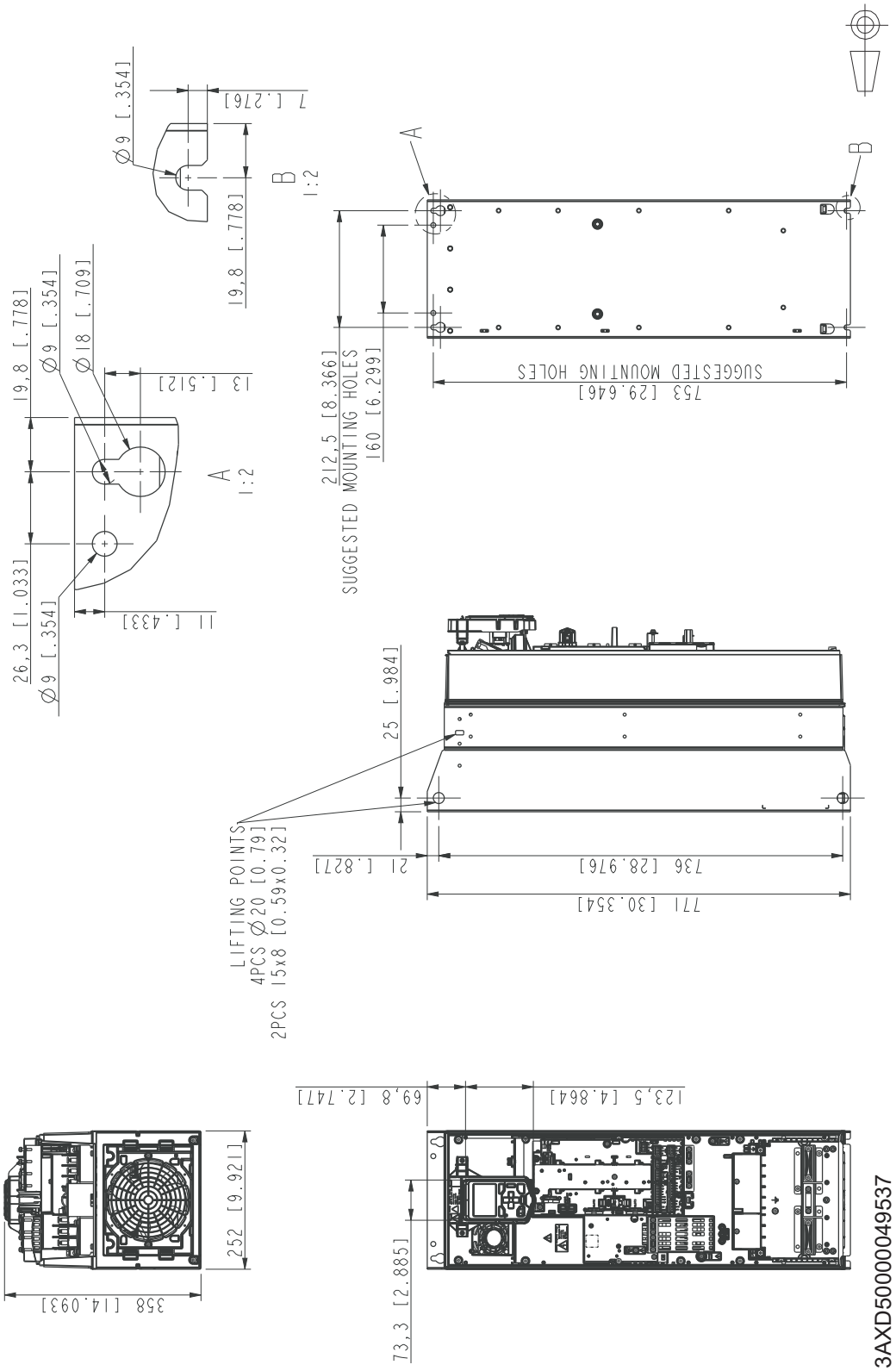

R8 – Option +P940 (IP20, UL Type Open)

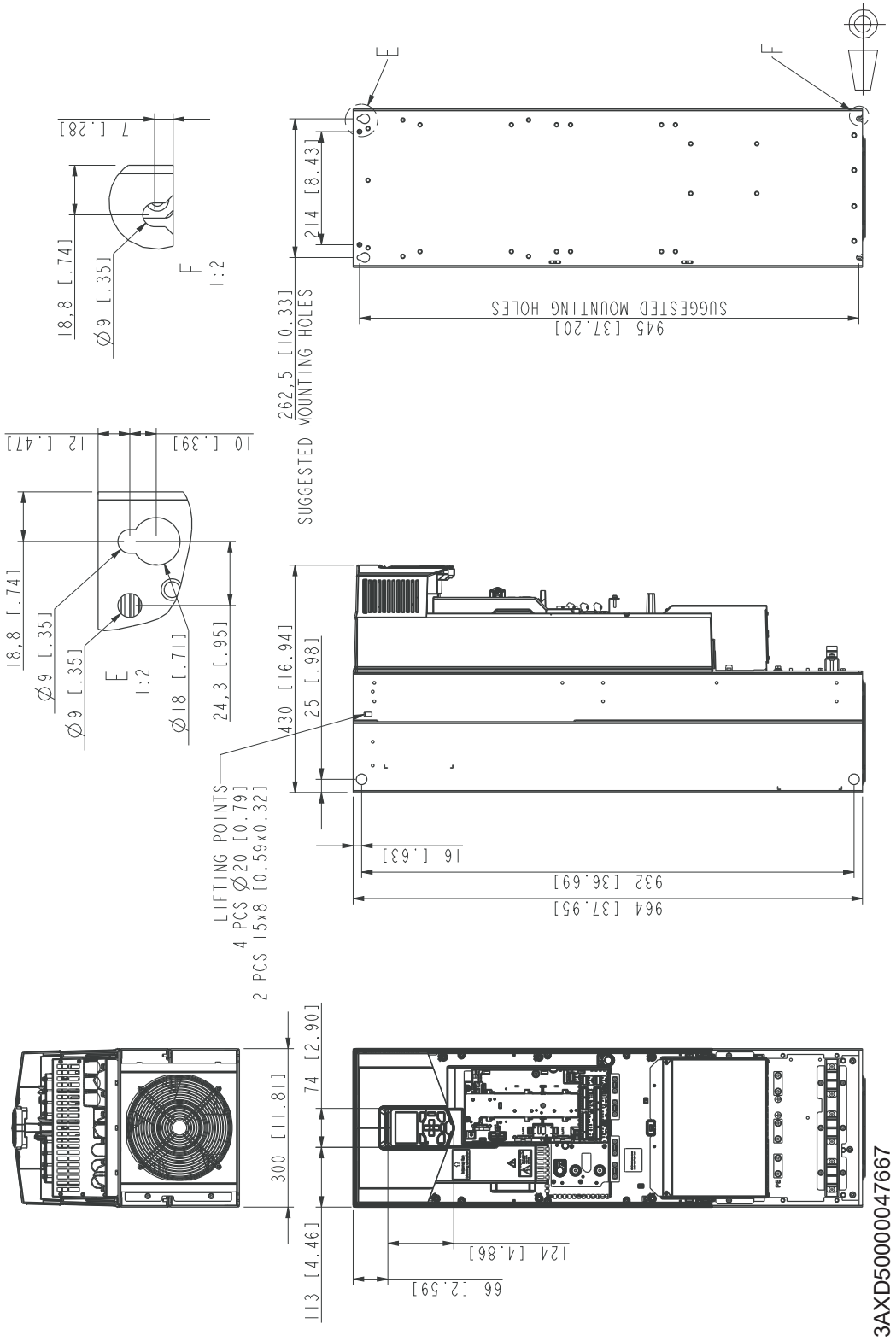

Further information

Product and service inquiries

Address any inquiries about the product to your local ABB representative, quoting the type designation and serial number of the unit in question. A listing of ABB sales, support and service contacts can be found by navigating to www.abb.com/searchchannels.

Product training

For information on ABB product training, navigate to new.abb.com/service/training.

Providing feedback on ABB manuals

Your comments on our manuals are welcome. Navigate to new.abb.com/drives/manuals-feedback-form.

Document library on the Internet

You can find manuals and other product documents in PDF format on the Internet at www.abb.com/drives/documents.

a2 (frozen)
PDF-Web
Created 2019-10-15, 09:14:31

www.abb.com/drives

3AUA0000145446E

© 2019 ABB Oy. All Rights Reserved.
Specifications subject to change without notice.

3AUA0000145446 Rev E (EN) EFFECTIVE 2019-10-15