ABB industrial drives

Application guide
ACS800-01/U1/04/04LC/04M/U4/11/U11/14/31/U31/104/104LC
Safe torque off function (+Q967)

Power and productivity
for a better world™

List of related manuals

Single drive and drive modules hardware manuals	Code (English)
ACS800-01/U1 Hardware Manual	*3AFE64382101*
ACS800-04/04M/U4 Hardware Manual (45 to 560 kW)	*3AFE64671006*
ACS800-04 Drive Modules Hardware Manual (0.55 to 200 kW)	*3AFE68372984*
ACS800-11/U11 Hardware Manual	*3AFE68367883*
ACS800-14 Frequency Converter Modules Supplement	*3AFE68458986*
ACS800-31/U31 Hardware Manual	*3AFE64671006*

Air-cooled multidrive modules manuals	
ACS800 Multidrive and Multidrive Modules Safety Instructions	*3AFE64760432*
ACS800 Multidrive and Multidrive Modules Planning the Electrical Installation	*3AFE64783742*
ACS800-104 Inverter Modules Hardware Manual	*3AFE64809032*

Liquid-cooled multidrive modules manuals	
ACS800 Liquid-cooled Multidrive and Multidrive Modules Safety Instructions	*3AFE68715318*
ACS800 Liquid-cooled Multidrive and Multidrive Modules Planning the Electrical Installation	*3AFE68715423*
ACS800-104LC Inverter Modules (1.5. to 2240 kW) Hardware Manual	*3AFE68806402*

Firmware manuals	
ACS800 standard control program firmware manual	*3AFE64527592*
ACS800 system control program firmware manual	*3AFE64670646*
Applicable control program firmware manuals	

Option manuals and general safety guides	
Functional safety; Technical guide No. 10	*3AUA0000048753*
Safety and functional safety; A general guide	*1SFC001008B0201*
ABB Safety information and solutions	*www.abb.com/safety*
Manuals and quick guides for I/O extension modules, fieldbus adapters, etc.	

You can find manuals and other product documents in PDF format on the Internet. See section *Document library on the Internet* on the inside of the back cover. For manuals not available in the Document library, contact your local ABB representative.

Application guide

ACS800-01/U1/04/04LC/04M/U4/11/U11/14/31/U31/104/104LC
Safe torque off function (+Q967)

Table of contents

3. Installation

4. Start-up and use

© 2015 ABB Oy. All Rights Reserved.

3AUA0000063373 Rev H
EN
EFFECTIVE: 2015-03-12

Table of contents

1. Introduction to the manual

Contents of this chapter . . . 7
Applicability . . . 7
Safety instructions . . . 7
Target audience . . . 8
Contents . . . 8
Abbreviations . . . 9

2. Option description

Contents of this chapter . . . 11
Description . . . 11
Operation principle . . . 12
STO status indications . . . 13
STO function activation and indication response times . . . 14
Module response times only . . . 14
Response times with typical safety relay . . . 14

3. Installation

Contents of this chapter . . . 15
Supply voltage . . . 15
Connections . . . 15
STO input . . . 15
Activation switch . . . 16
Cable types and lengths . . . 16
Cable between STO activation switch and drive/inverter module or ASTO board . 16
Cable between ASTO board and drive/inverter module . . . 16
Example wiring diagrams . . . 17
STO connections without safety relays . . . 17
Connecting the STO activation switch . . . 17
Frame sizes R2 to R6 . . . 18
Frame sizes R7 and R8 . . . 18
Frame sizes R2i to R4i . . . 19
Frame size R5i . . . 19
Frame size R7i . . . 20
Frame size R8i . . . 20
Liquid-cooled modules of frame sizes R7i and R8i . . . 21
STO connections with safety relays . . . 22
Frame sizes R2 to R6 . . . 22
Frame sizes R7 and R8 . . . 23
Frame sizes R2i to R4i . . . 24
Frame size R5i . . . 25
Frame size R7i . . . 26
Frame size R8i . . . 27
Connecting several drive/inverter modules or inverter units to one safety relay . . 28

4. Start-up and use

Contents of this chapter 29
Start-up and acceptance test 29
Competence 29
Acceptance test reports 30
Acceptance test procedure 30
Use 31

5. Maintenance and fault tracing

Contents of this chapter 33
Maintenance 33
Proof test interval 33
Competence 34
Fault tracing 34
Warning messages generated by the drive 34
Fault messages generated by the drive 34

6. Technical data

Contents of this chapter 35
STO components 35
ASTO-11/21 board 35
ASTO-11 and ASTO-21 board 35
ASTO-11 board 35
ASTO board according to frame size of the module 36
Dimensions of the ASTO board with enclosure 36
STO safety relay type 37
Push-button to be used with emergency stop 37
Switch to be used with Prevention of unexpected start-up function implemented with STO 37
Safety data 37
STO in ACS800 drives and inverter modules 37
Multiples of frame size R8i 38
Related standards and directives 39
Compliance with the European Machinery Directive 39
TÜV certificate 40
Declarations of Conformity 41

Further information

Product and service inquiries 43
Product training 43
Providing feedback on ABB Drives manuals 43
Document library on the Internet 43

1

Introduction to the manual

Contents of this chapter

This chapter describes the manual in short and gives some general information for the reader.

Applicability

The manual applies to the ACS800-01/04/04LC/04M/11/14/31/104/104LC and ACS800-U1/U4/U11/U31 drives and inverter modules which have the option +Q967: Safe torque off (STO).

Safety instructions

Only a qualified electrician who has appropriate knowledge on functional, machine and process safety is allowed to install, start up and maintain the safety circuit.

WARNING! The Safe torque off function does not disconnect the voltage of the main and auxiliary circuits from the inverter. Therefore maintenance work on electrical parts of the inverter or the motor can only be carried out after isolating the inverter from the main supply.

WARNING! The Safe torque off functionality is only achieved, when the ASTO board is installed on the inverter module. True Safe torque off functionality is not achieved, if the option board is installed on other types of modules, such as the supply unit or the brake unit.

WARNING! (With permanent magnet motors only) In case of a multiple IGBT power semiconductor failure, the inverter system can produce an alignment torque which maximally rotates the motor shaft by 180/*p* degrees regardless of the activation of the Safe torque off function. *p* denotes the number of pole pairs.

WARNING! Read and obey all safety instructions in the drive hardware manual. If you ignore them, injury or death, or damage to the equipment can occur.

This manual does not repeat the complete safety instructions of the drive but it only includes the instructions related to the scope of this manual.

Target audience

This manual is intended for people who install, start up, use and service the drive safety option. Read the manual before working on the drive. You are expected to know the fundamentals of electricity, wiring, electrical components, electrical schematic symbols, and functional safety.

Contents

The chapters of this manual are briefly described below.

Introduction to the manual (this chapter) introduces this manual and gives safety instructions.

Option description describes the Safe torque off (STO) function of the drive and inverter modules and lists the indications and response times of the Safe torque off function.

Installation describes the installation procedure, wiring and allowed cable type of the Safe torque off function.

Start-up and use contains the start-up and acceptance test procedure for the Safe torque off function and gives instructions for its use.

Maintenance and fault tracing describes the maintenance procedure, required competence for maintenance personnel and fault tracing information for the Safe torque off function.

Technical data contains the technical details of the ASTO-11 and ASTO-21 boards, the safety data for the STO and example information of safety relays, safety logic and activation switches. It also lists the related standards and directives, and contains the TÜV certificate and declarations of conformity with the European Machinery Directive.

Abbreviations

Abbreviations used in this manual are listed below.

Abbr.	Reference	Description
ASTO		Safe torque off board
Cat.	EN ISO 13849-1	Category. Classification of the safety-related parts of a control system in respect of their resistance to faults and their subsequent behavior in the fault condition, and which is achieved by the structural arrangement of the parts, fault detection and/or by their reliability. The categories are: B, 1, 2, 3 and 4.
CCF	EN ISO 13849-1	Common cause failure (%)
DC	EN ISO 13849-1	Diagnostic coverage
HFT	IEC 61508	Hardware fault tolerance
$MTTF_d$	EN ISO 13849-1	Mean time to dangerous failure: (The total number of life units) / (the number of dangerous, undetected failures) during a particular measurement interval under stated conditions.
PFD	IEC 61508	Probability of failure on demand
PFH	IEC 61508	Probability of dangerous failures per hour
PL	EN ISO 13849-1	Performance level. Levels a…e correspond to SIL.
SC	IEC 61508	Systematic capability
SFF	IEC 61508	Safe failure fraction (%)
SIL	IEC 61508	Safety integrity level (1…3)
SILCL	IEC/EN 62061	Maximum SIL (level 1…3) that can be claimed for a safety function or subsystem
SS1	IEC/EN 61800-5-2	Safe stop 1
STO	IEC/EN 61800-5-2	Safe torque off
T1	IEC 61508	Proof test interval. T1 is a parameter used to define the probabilistic failure rate (PFH or PFD) for the safety function or subsystem. Performing a proof test at a maximum interval of T1 is required to keep the SIL capability valid. The same interval must be followed to keep the PL capability (EN ISO 13849) valid. Note that any T1 values stated cannot be regarded as a guarantee or warranty. See also section *Proof test interval* on page *33*.

2

Option description

Contents of this chapter

This chapter describes the Safe torque off (STO) function of the drive and inverter modules and lists the indications and response times of the Safe torque off function.

Description

The Safe torque off function can be used, for example, to construct safety or supervision circuits that stop the inverter in case of danger (such as an emergency stop circuit). Another possible application is a prevention of unexpected start-up function that enables short-time maintenance operations like cleaning or work on non-electrical parts of the machinery without switching off the power supply.

When activated, the Safe torque off function disables the control voltage of the power semiconductors of the inverter output stage. This prevents the inverter from generating the torque required to rotate the motor. If the motor is running when Safe torque off is activated, it coasts to a stop.

Example diagram of STO in R8i module with safety relay

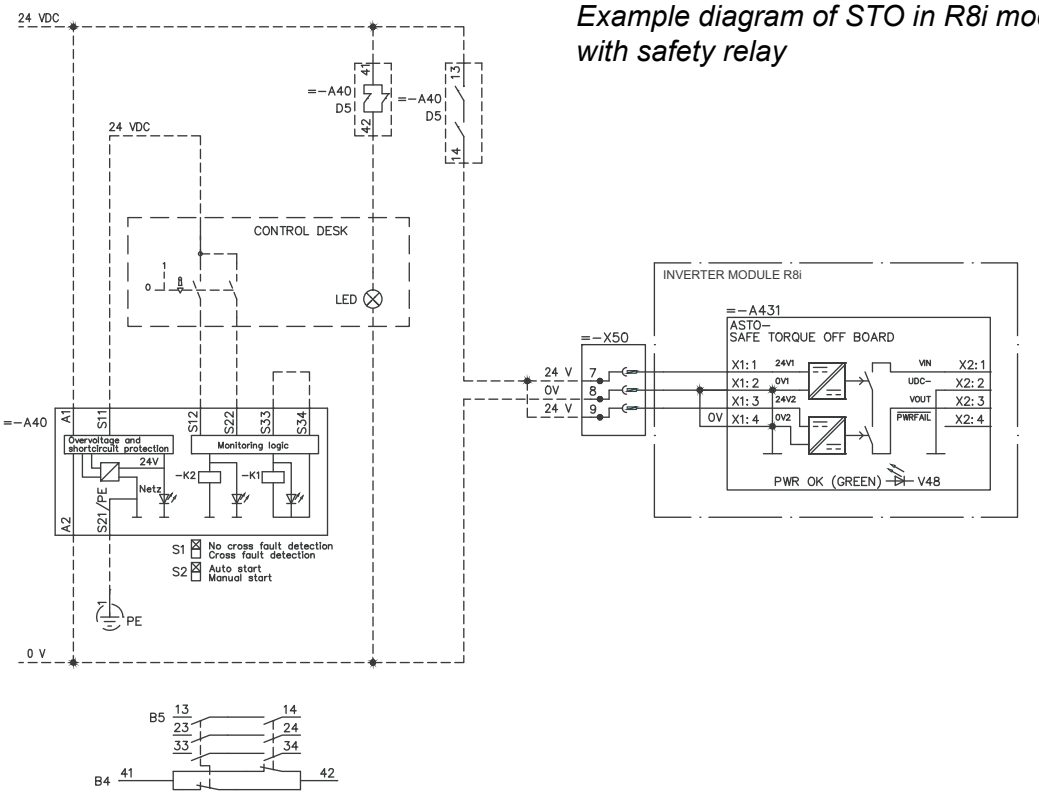

The STO function corresponds to Prevention of unexpected start-up as specified by EN 1037:1995 + A1:2008 and Uncontrolled stop (stop category 0) as specified in EN 60204-1:2006 + AC:2010.

Operation principle

1. The user opens the Safe torque off circuit with an STO activation switch (or it is opened by a device such as safety relay).
2. The STO inputs on the drive/inverter de-energize.
3. The STO cuts off the control voltage from the inverter IGBTs.
4. The control program generates an indication as defined in the table below.
5. Motor coasts to a stop (if running). The drive/inverter cannot restart while the activation switch or safety relay contacts are open. After the contacts close, a new start command may be required to start the drive (depends on parameter settings).

The table below describes the operation of the STO function in detail depending on:

- status of the STO inputs
- the fault or warning START INHIBI (see chapter *Maintenance and fault tracing*).

Status of STO inputs	When drive is	How the STO function operates	START INHIBI indication
De-energized	running	Awakes and trips the drive.	Fault
	stopped	Awakes and disables start.	Warning
One energized, other de-energized	running	Awakes and trips the drive.	Fault
	stopped	Awakes and disables start.	Warning
Energized	running or stopped	STO is on standby. Drive operates normally.	-

STO status indications

Note: The indications are not safety classified information.

Control program	Alarm and status bits / words
System Control Program	08.02 AUX STATUS WORD bit 8 08.21 START INHIBI WORD
Standard Control Program	03.03 AUX STATUS WORD bit 8

Control program	Alarms and faults
System Control Program	09.04 ALARM WORD 1 bit 0 09.06 FAULT WORD 3 bit 5 31.02 START INHIBIT ALM
Standard Control Program	03.08 ALARM WORD 1 bit 0

Control program	Digital / relay outputs
System Control Program	14 DIGITAL OUTPUTS **Note:** To be programmed by the user. For information on programming the digital outputs, see *ACS800 system control program firmware manual* [3AFE64670646 (English)].
Standard Control Program	14 RELAY OUTPUTS **Note:** To be programmed by the user. For information on programming the relay outputs, see *ACS800 standard control program firmware manual* [3AFE64527592 (English)].

See also chapter *Maintenance and fault tracing*.

STO function activation and indication response times

Module response times only

STO activation and indication response times	Typical response time	Maximum response time
STO activation response time [1)]	2 ms	20 ms
STO indication response time [2)]	1.5 ms	-

[1)] STO activation response time = delay between de-energizing the STO input and switching off the drive/ inverter output bridge

[2)] STO indication response time = delay between de-energizing the STO input and indication of STO input de-energization

Response times with typical safety relay

STO activation and indication response times	Typical response time	Maximum response time
STO activation response time [3)]	52 ms	70 ms
STO indication response time [4)]	51.5 ms	-

[3)] STO activation response time = delay between de-energizing the STO relay and switching off the drive/ inverter output bridge

[4)] STO indication response time = delay between de-energizing the STO relay and indication of STO input de-energization

3

Installation

Contents of this chapter

This chapter describes the installation procedure, wiring and allowed cable type of the Safe torque off function.

Supply voltage

WARNING! The supply voltage of the STO circuit (ASTO boards) is 24 V DC. Never supply the ASTO board with 230 V AC or 115 V AC. This can damage the board and it must be replaced.

Note: Since former option +Q950 (Prevention of unexpected start-up function) uses 230 V or 115 V supply voltage, it is not possible to use it with Safe torque off function (option +Q967) or vice versa. Note this when using spare parts.

Note: The Safe torque off function can be installed afterwards (that is, after the factory assembly) to drive modules. Contact ABB Drives Service for further information.

Connections

STO input

The STO input can be supplied from an external power supply or from an RMIO control unit 24 V DC output. In both cases the requirements given below must be fulfilled.

Specifications of the STO input:

- Connector pitch: 5.08 mm, maximum wire size 2.5 mm^2
- Operation voltage: 24 V DC +/- 10%
- Logic levels: "0" < 5 V DC, "1" > 17 V DC
- For the drive to start, both STO inputs must be "1".
- Current consumption: 20 mA per STO channel.

Note: If an external power supply is used for the STO, the power supply must have over-voltage and over-current protections.

Note: For STO input connection diagrams and pin numbers, see the following connection diagrams.

Activation switch

The activation switch is shown in the diagram on page 22 as well as in the Safe torque off with safety relay examples. This represents a component such as a manually operated switch, an emergency stop push button, the contacts of a safety relay or a safety PLC.

If a manually operated activation switch is used, the switch must be of a type that can be locked out to the open position.

Cable types and lengths

Cable between STO activation switch and drive/inverter module or ASTO board

The cable from the STO activation switch runs to the drive/inverter module connector in frame sizes R2i-R8i and R7-R8. In frame sizes R2-R6, the cable runs from the STO activation switch to an external ASTO board. This cable is not included in the delivery but it must be acquired by the customer. Make sure that it meets the specifications in this section.

A single-shielded twisted-pair cable is required.

Maximum cable lengths:

- 300 m (980 ft) between the activation switch and ASTO board.

Cable between ASTO board and drive/inverter module

Only the WSTO wire harnesses supplied with the Safe torque off option board can be used between the ASTO and the INT board within the drive/inverter module. The SIL/PL classification is only valid when the WSTO wire harnesses are used.

Drive modules, frame sizes R2...R6 with an external ASTO board

Use only the cable ordered for the ASTO board and included in the delivery (type WSTO). Several cable lengths are available. The options are shown in the table below.

Name	Length (mm)	Code
WSTO-02	185	3AUA0000067819
WSTO-03	305	3AUA0000067820
WSTO-04	3000	3AUA0000067823
WSTO-05	10000	3AUA0000050722

WARNING! Drive modules, frame sizes R2...R6: For connecting the ASTO board and the module, use only the wire kits delivered by ABB. If you use other cables or modify the cables, you may cause a malfunction of the drive.

Example wiring diagrams

Connect the cables as shown in the diagram below. For more information on the components, see chapter *Technical data*.

STO connections without safety relays

The following diagrams show the STO connections without safety relays in:

- connecting an emergency stop push button to the drive/inverter module without safety relay (page *22*).
- single drives R2-R6 and R7-R8 (page *18*)
- inverter modules R2i-R4i, R5i, R7i, R8i, R7iLC and R8iLC (pages *19*-*21*)

Connecting the STO activation switch

We recommend using a safety relay between the activation switch and the STO input, because the STO is not capable of detecting any redundancy fault of the switch (such as a welded contact).

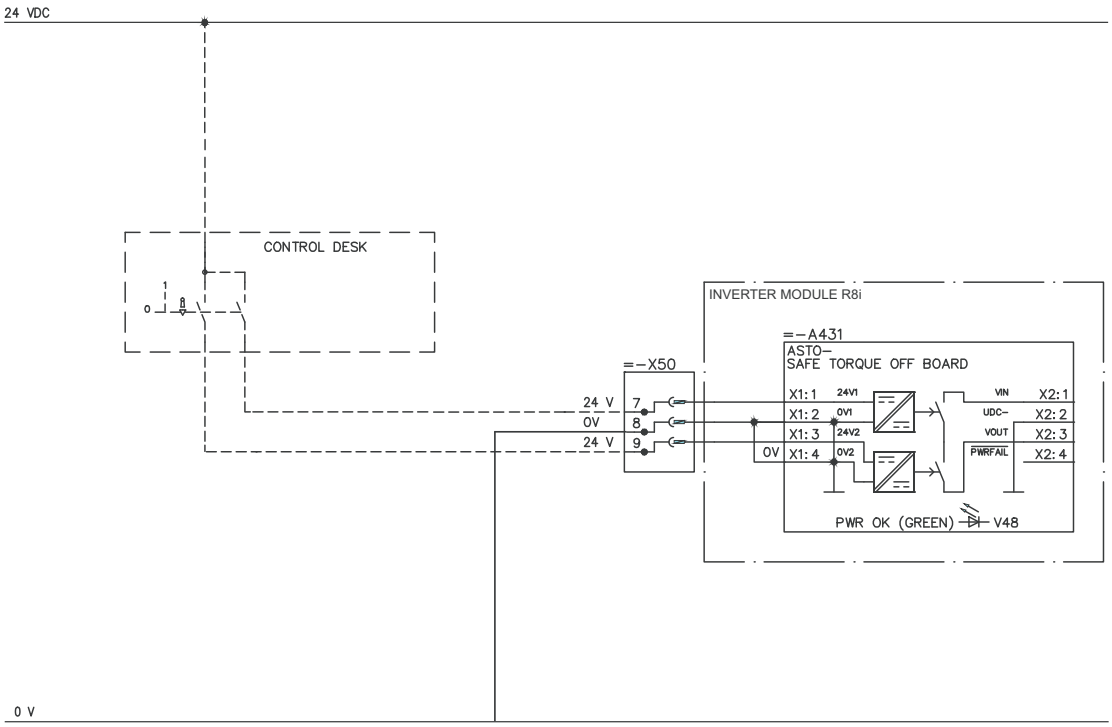

3AUA0000096631

Frame sizes R2 to R6

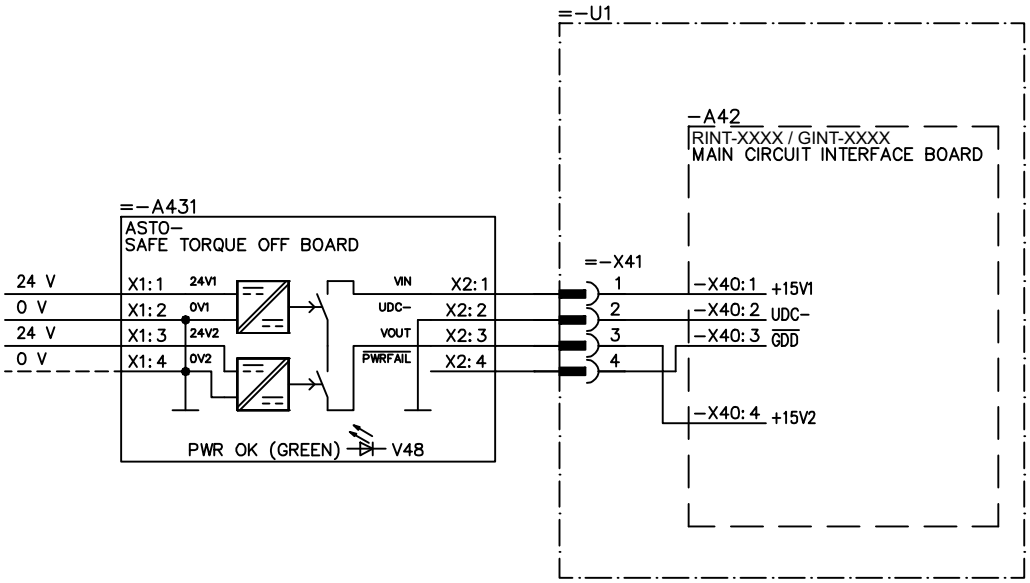

3AUA0000072542

Frame sizes R7 and R8

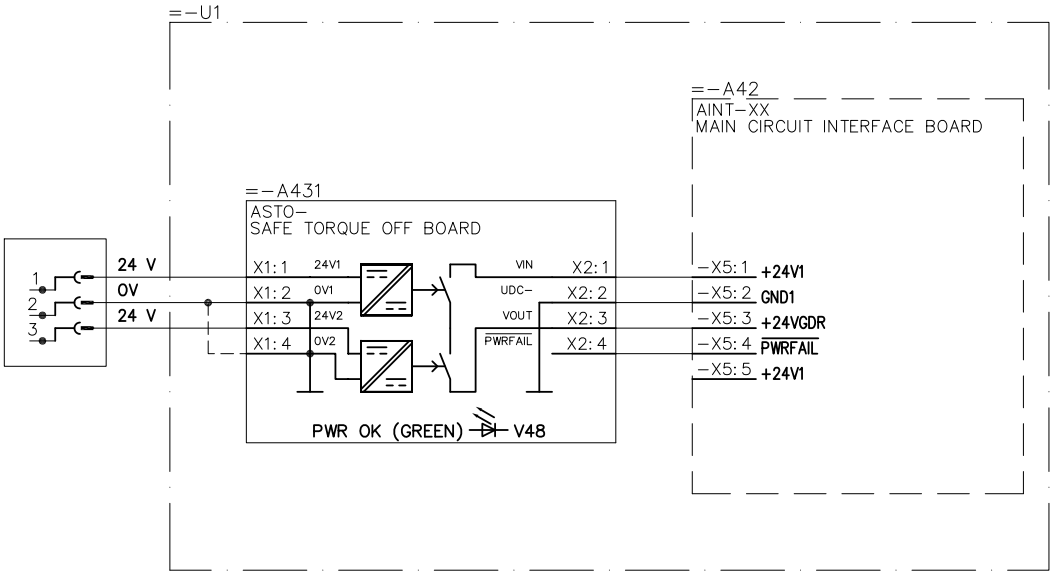

3AUA0000072272

Frame sizes R2i to R4i

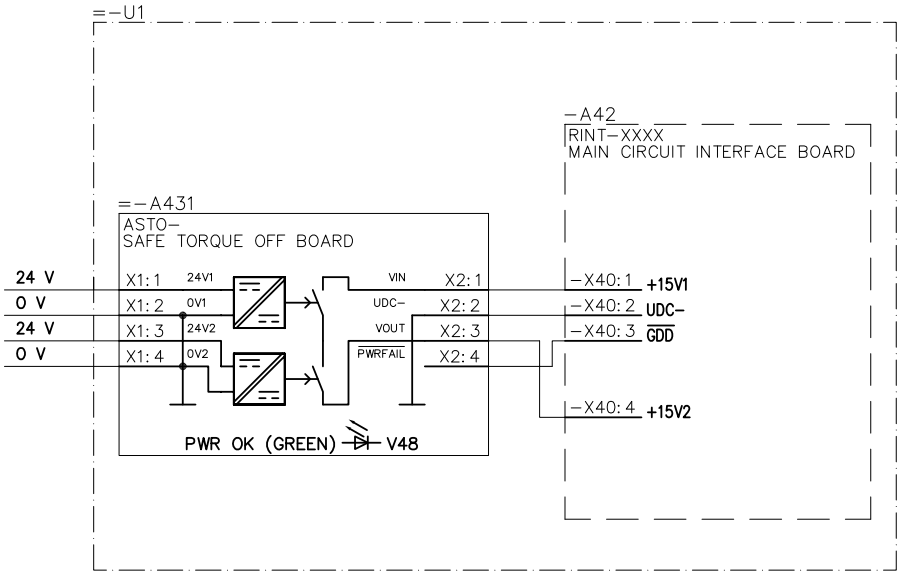

3AUA0000077408

Frame size R5i

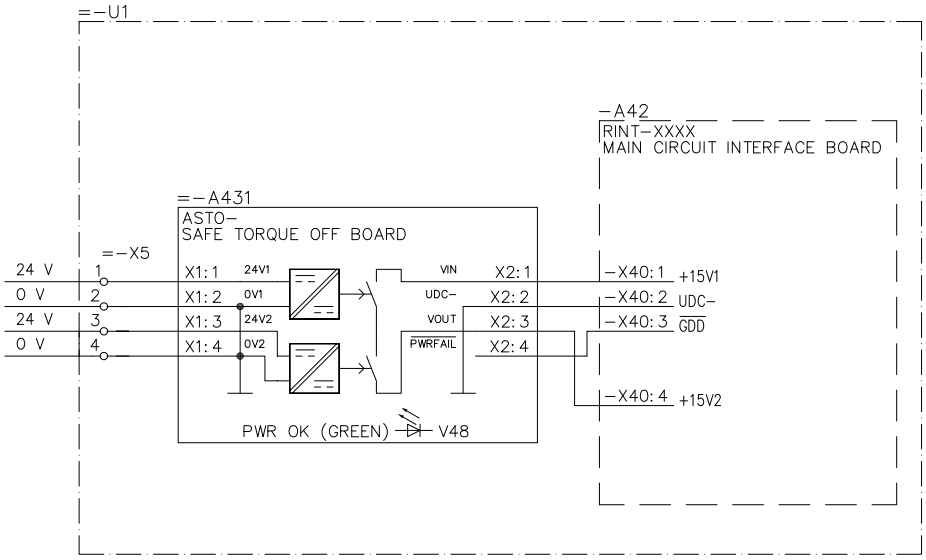

3AUA0000077456

Frame size R7i

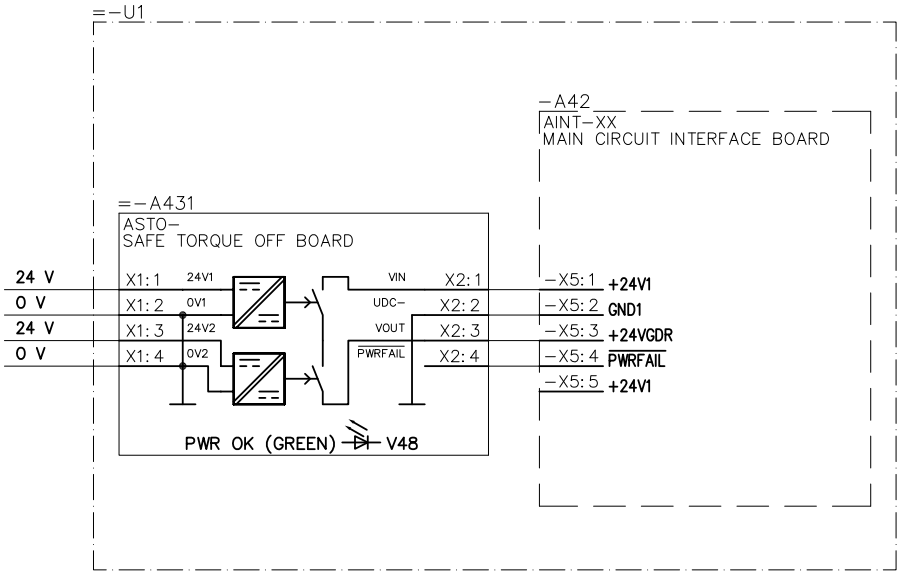

3AUA0000077458

Frame size R8i

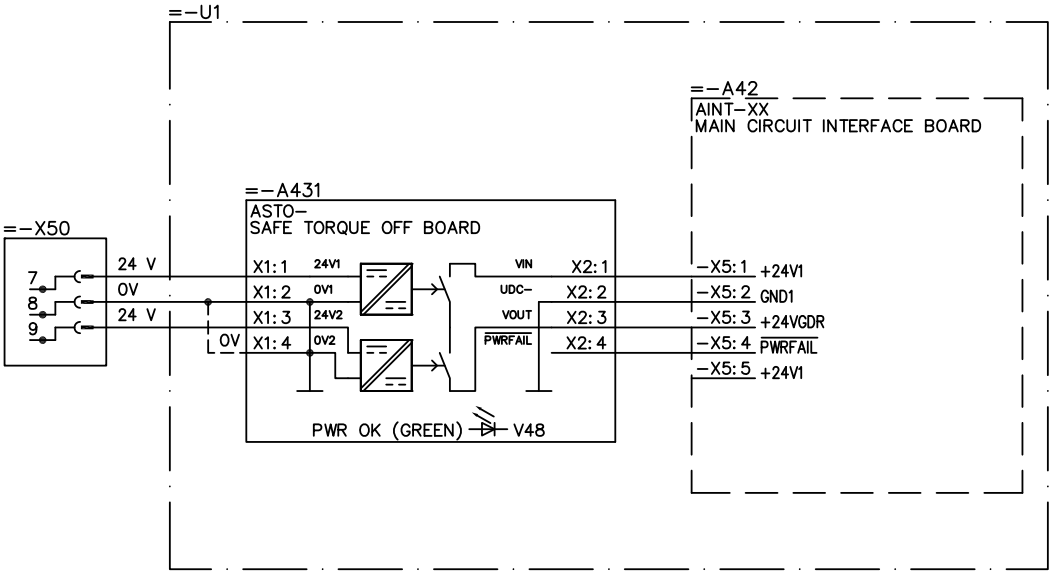

3AUA0000077457

Liquid-cooled modules of frame sizes R7i and R8i

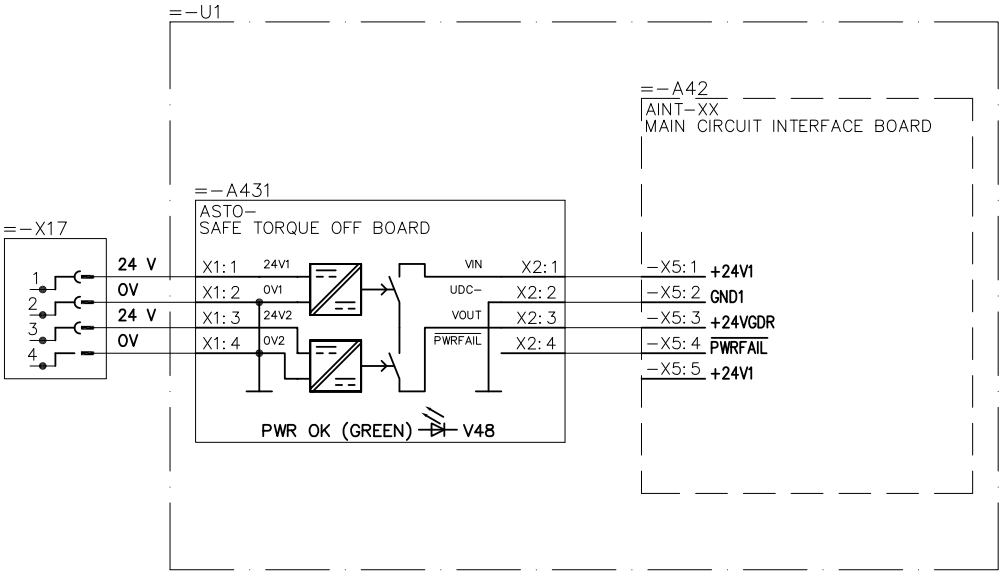

3AUA0000077142

STO connections with safety relays

The following diagrams show examples of STO connections with safety relays for:

- single drives R2-R6 and R7-R8 (page 22)
- inverter modules R2i-R4i, R5i, R7i and R8i (pages 24-27)
- multiple drive/inverter modules or inverter units (page 28).

Note: The safety relay is not included in the delivery when the drive is equipped with option +Q967. In the examples below, the recommended customer wiring of the safety circuit (the activation switch, safety relay and ASTO board) are shown with a dashed line (on the customer's responsibility). The connection from ASTO board to drive/inverter is shown with a solid line (included in STO kit deliveries).

Frame sizes R2 to R6

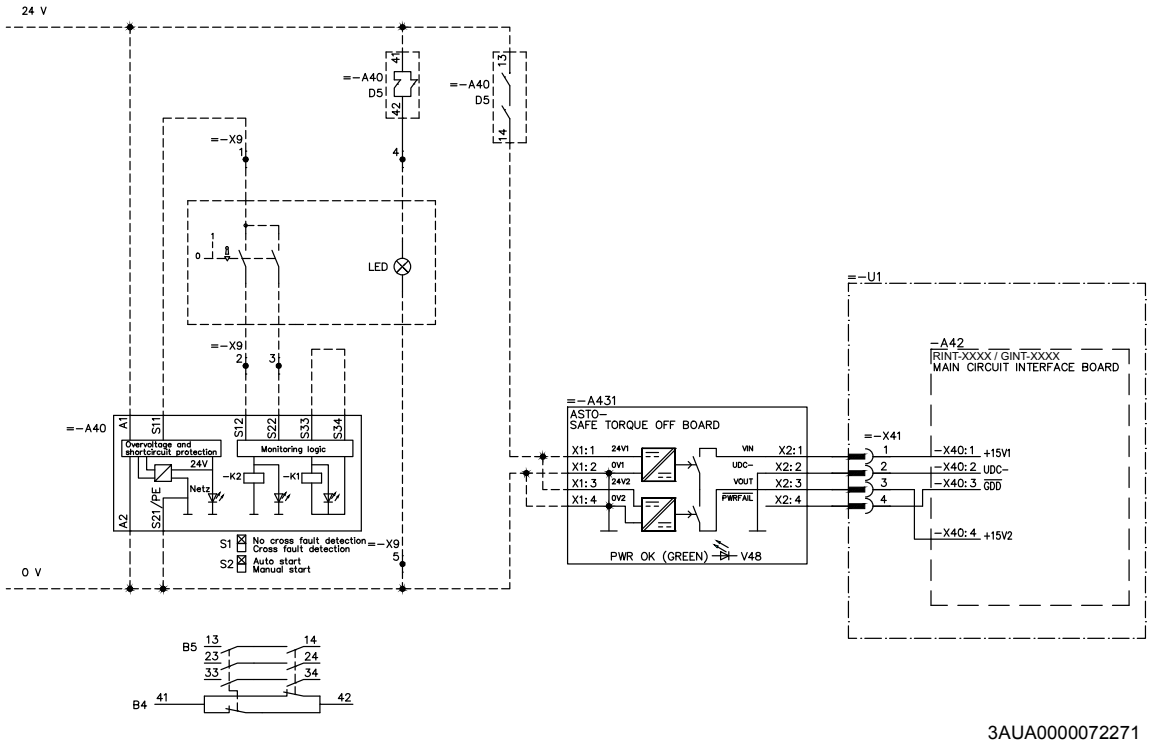

Frame sizes R7 and R8

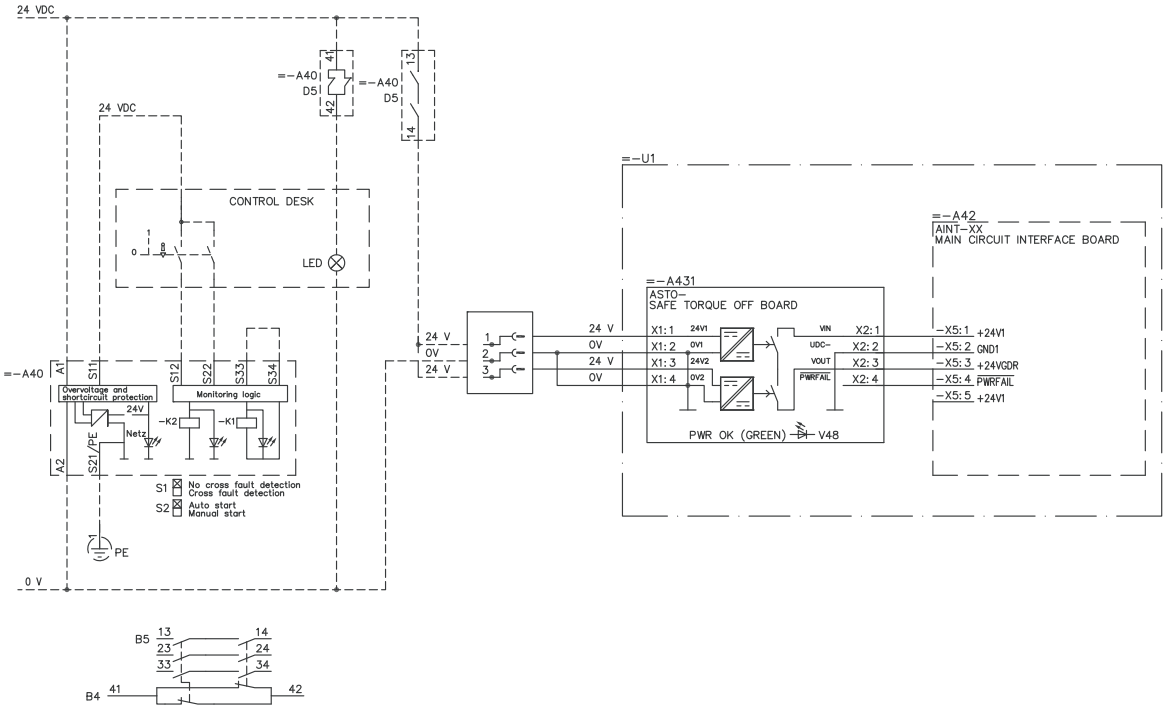

3AUA0000078208

Frame sizes R2i to R4i

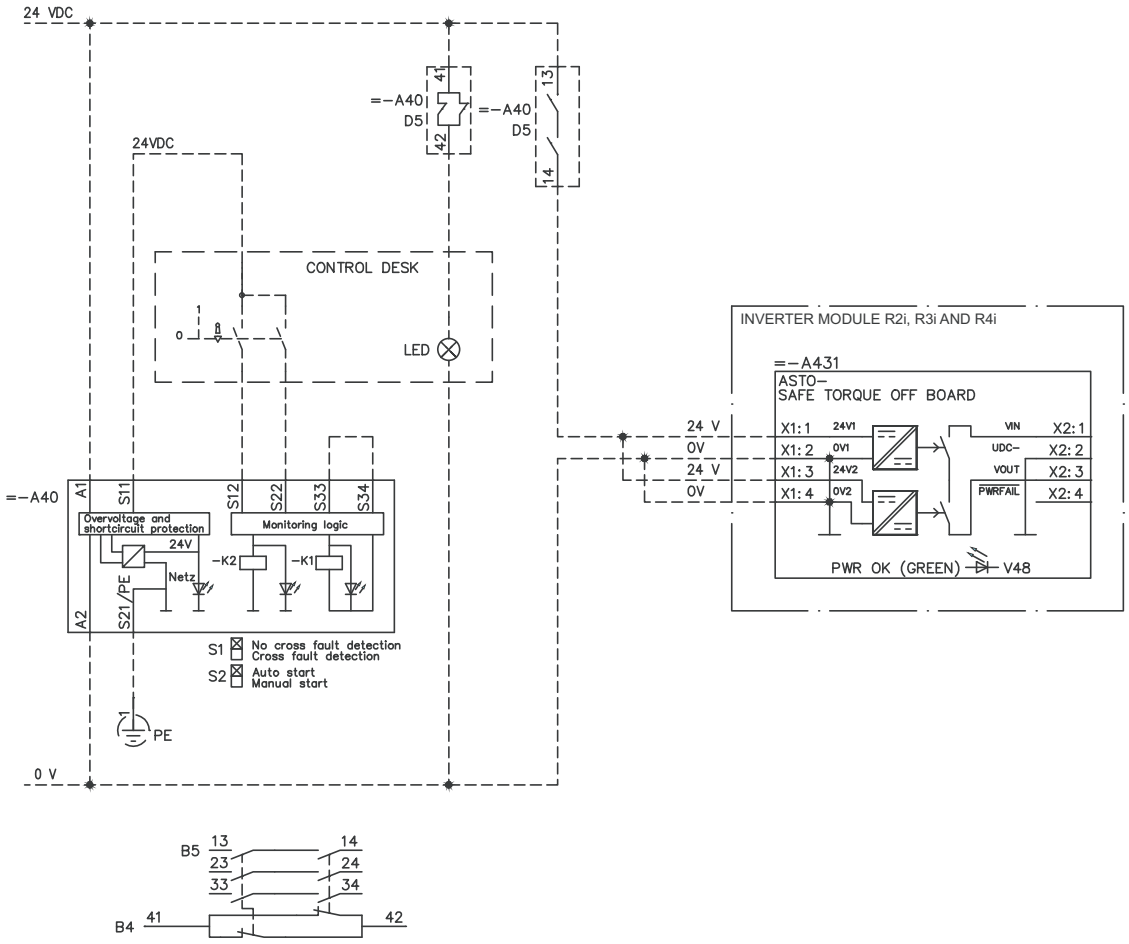

3AUA0000071122

Frame size R5i

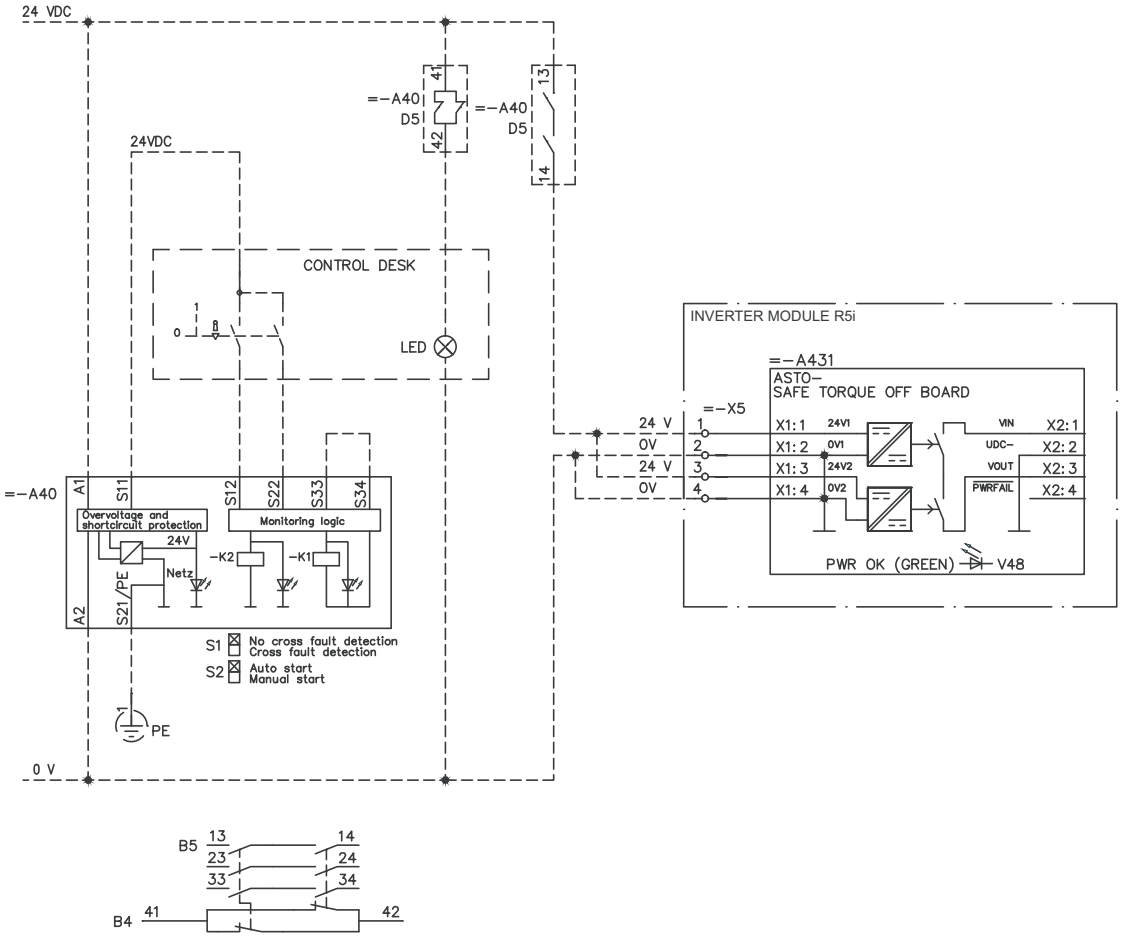

3AUA0000071141

Frame size R7i

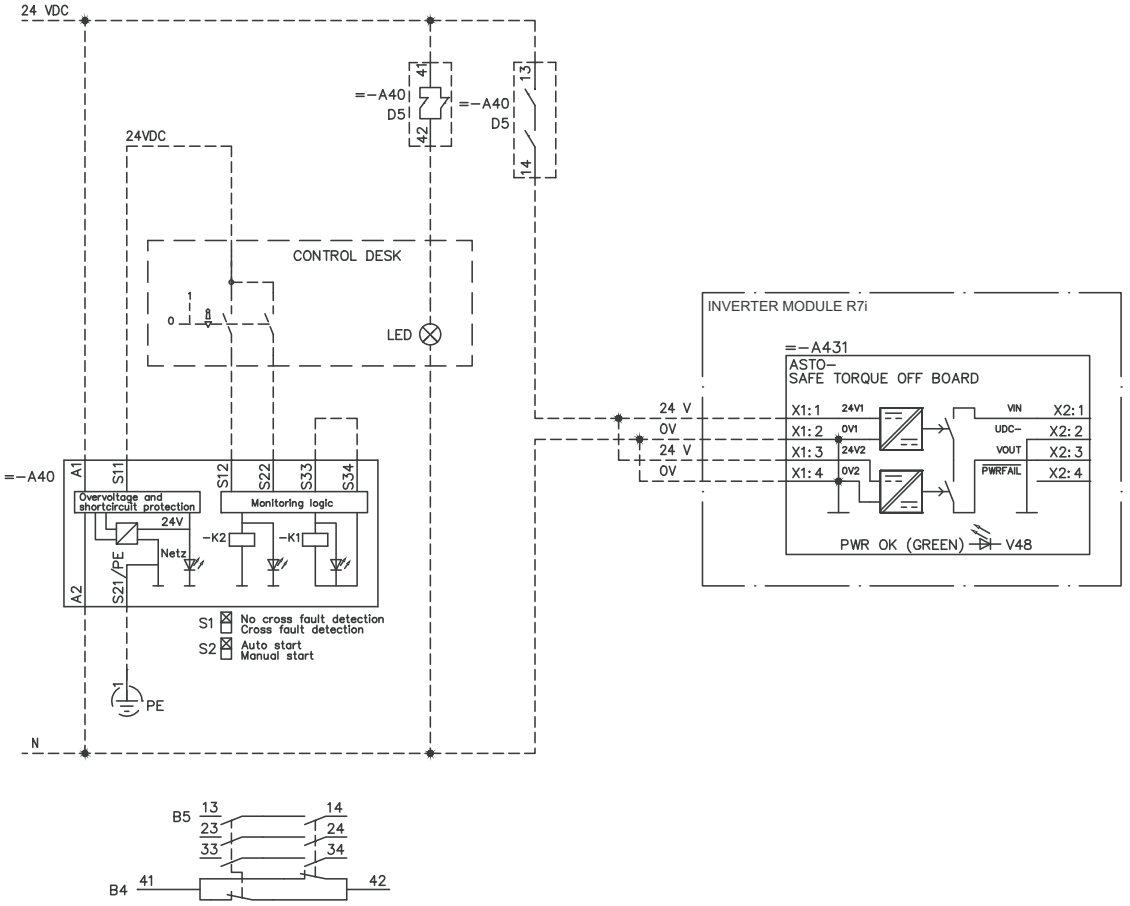

3AUA0000071142

Frame size R8i

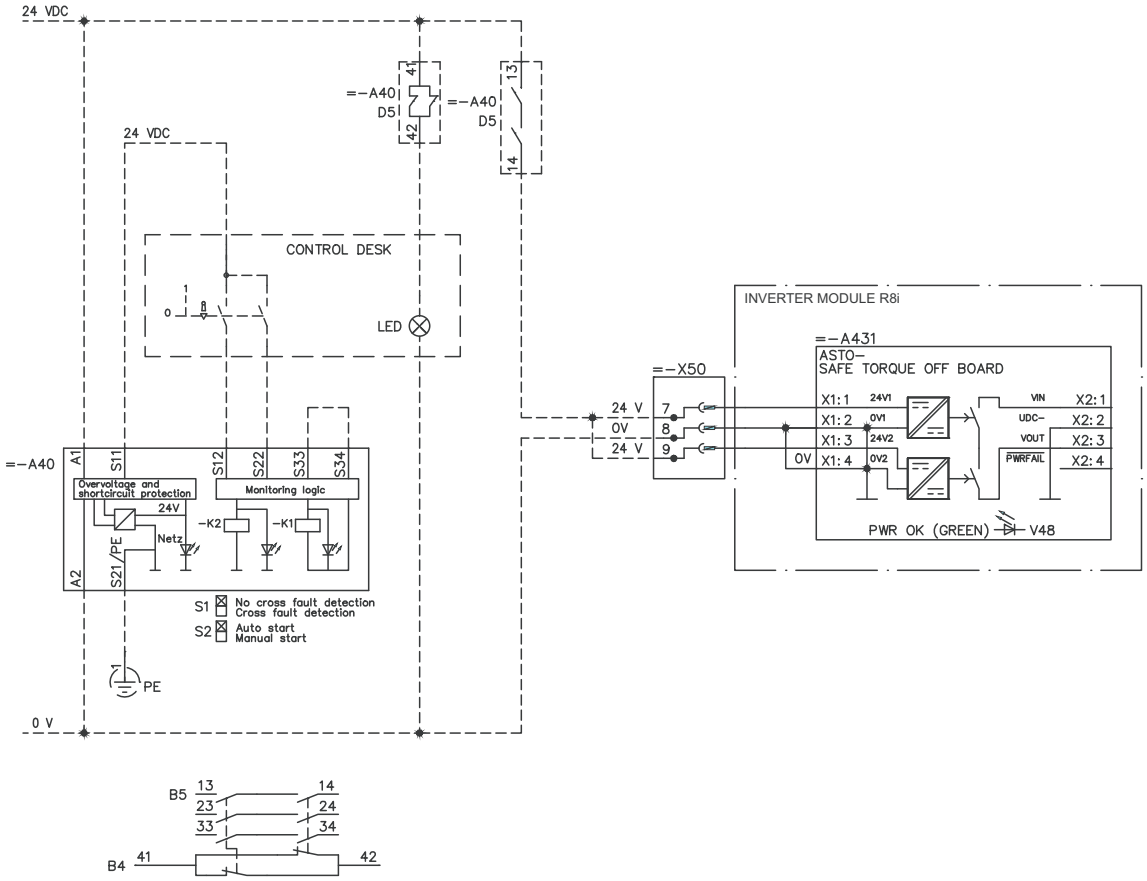

3AUA0000071143

Connecting several drive/inverter modules or inverter units to one safety relay

In the example, R8i modules are used, but the same principle applies to any frame size.

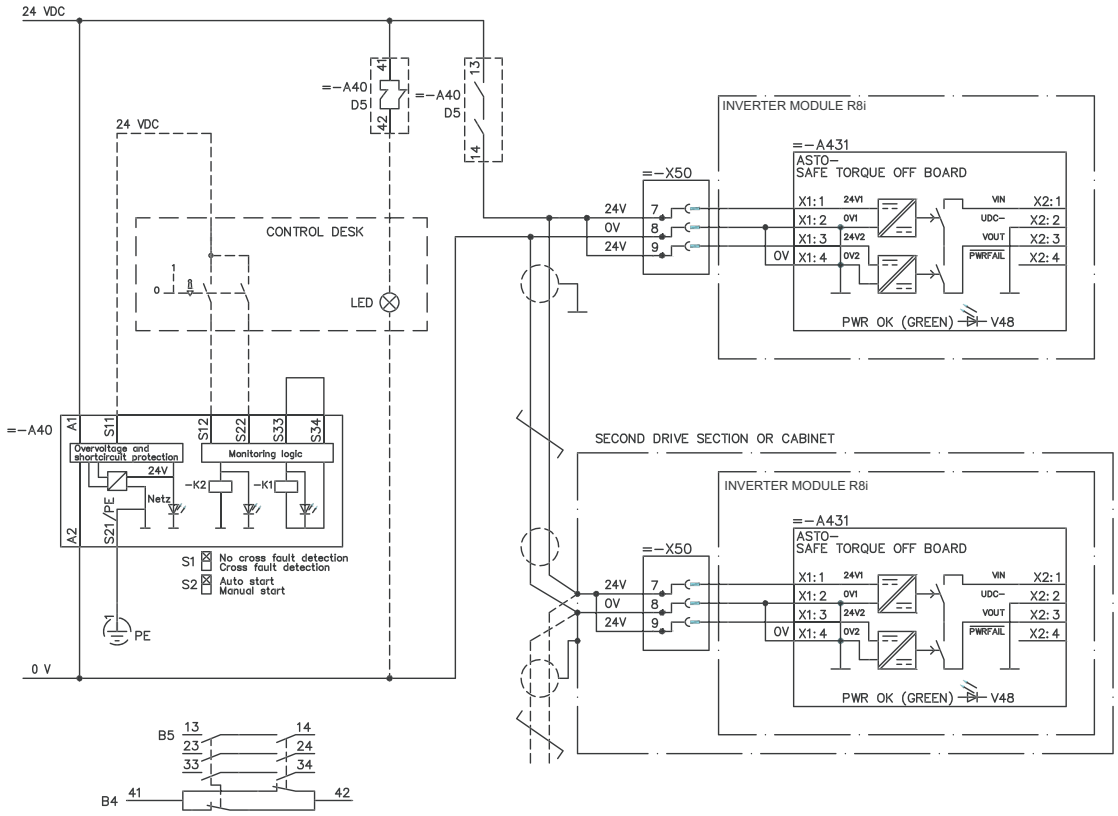

3AUA0000096632

4

Start-up and use

Contents of this chapter

This chapter contains the start-up and acceptance test procedure for the Safe torque off function and gives instructions for its use.

Start-up and acceptance test

To ensure the safe operation of a safety function, validation is required. The final assembler of the machine must validate the function by performing an acceptance test. The acceptance test must be performed

- at initial start-up of the safety function
- after any changes related to the safety function (circuit boards, wiring, components, settings, etc.)
- after any maintenance work related to the safety function.

Competence

The acceptance test of the safety function must be carried out by a competent person with adequate expertise and knowledge of the safety function as well as functional safety, as required by IEC 61508-1 clause 6. The test procedures and report must be documented and signed by this person.

Acceptance test reports

You must store the signed acceptance test reports in the logbook of the machine. The report must include, as required by the referred standards:

- description of the safety application (including a figure)
- a description and revisions of safety components that are used in the safety application (STO and other components)
- a list of all safety functions using STO that are used in the safety application
- a list of all safety related parameters and their values (STO has no safety-related parameters)
- documentation of start-up activities, references to failure reports and resolution of failures
- the test results for each safety function, checksums (not relevant for the STO safety component), date of the tests and confirmation by the test personnel.

You must store any new acceptance tests performed due to changes or maintenance in the logbook of the machine.

Acceptance test procedure

After wiring the Safe torque off function, validate its operation as follows.

Action	☑
WARNING! Obey the safety instructions given in the relevant hardware manual and *ACS800 Multidrive and Multidrive modules Safety Instructions* (3AFE64760432 [English]). If you ignore them, it can cause physical injury or death, or damage to the equipment.	☐
Ensure that the drive/inverter can be run and stopped freely during start-up.	☐
Stop the drive/inverter (if running), switch the input power off and isolate the drive/inverter from the power line by a disconnector.	☐
Check the Safe torque off circuit connections against the wiring diagram.	☐
Close the disconnector and switch the power on.	☐
Test the operation of the STO function when the motor is stopped. • Give a stop command for the drive/inverter (if running) and wait until the motor shaft is at a standstill. Ensure that the drive/inverter operates as follows: • Open the STO circuit. The drive/inverter generates a "START INHIBI" warning. • Give a start command to verify that the STO function blocks the operation of the drive/inverter. The motor should not start. • Close the STO circuit. • Reset any active faults. Restart the drive/inverter and check that the motor runs normally.	☐
Test the operation of the STO function when the motor is running. • Start the drive/inverter and ensure the motor is running. • Open the STO circuit. The motor should stop. The drive/inverter generates a "START INHIBI" fault. • Reset any active faults and try to start the drive/inverter. • Ensure that the motor stays at a standstill and the drive/inverter operates as described above in testing the operation when the motor is stopped. • Close the STO circuit. • Reset any active faults. Restart the drive/inverter and check that the motor runs normally.	☐
Document and sign the acceptance test report which verifies that the safety function is safe and accepted for operation.	☐

Note: The drive/inverter indications are described in more detail in section *STO status indications* on page *13*.

Use

1. Open the activation switch, or activate the safety functionality that is wired to the STO connection.
2. STO inputs on the ASTO board de-energize, and the ASTO board cuts off the control voltage from the drive/inverter IGBTs.
3. The control program generates an indication as defined in section *STO status indications* on page *13*.
4. The motor coasts to a stop (if running). The drive/inverter cannot restart while the activation switch or safety relay contacts are open. After the contacts close, a new start command may be required to start the drive (depends on parameter settings).
5. Deactivate the STO by closing the activation switch, or resetting the safety functionality that is wired to the STO connection.
6. Reset any faults before restarting.

WARNING! The Safe torque off functionality is only achieved, when the ASTO board is installed on the inverter module. True Safe torque off functionality is not achieved, if the option board is installed on other types of modules, such as the supply unit or the brake unit.

WARNING! (With permanent magnet motors only) In case of a multiple IGBT power semiconductor failure, the inverter system can produce an alignment torque which maximally rotates the motor shaft by 180/*p* degrees regardless of the activation of the Safe torque off function. *p* denotes the number of pole pairs.

Notes:

- If a running drive/inverter is stopped by using the Safe torque off function, the drive/inverter will cut off the motor supply voltage and the motor will coast to a stop. If this causes danger or is not otherwise acceptable, stop the drive/inverter and machinery using the appropriate stop mode before activating the Safe torque off function.
- The Safe torque off function overrides all other functions of the drive/inverter.
- The Safe torque off function is ineffective against deliberate sabotage or misuse.
- The Safe torque off function has been designed to reduce the recognized hazardous conditions. In spite of this, it is not always possible to eliminate all potential hazards. The assembler of the machine must inform the final user about the residual risks.

5

Maintenance and fault tracing

Contents of this chapter

This chapter describes the maintenance procedure, required competence for maintenance personnel and fault tracing information for the Safe torque off function.

Maintenance

In addition to proof testing, it is a good practice to check the operation of the function when other maintenance procedures are carried out on the machinery.

Include the Safe torque off operation test described above in the routine maintenance program of the machinery that the drive/inverter runs.

If any wiring or component change is needed after start up, follow the test given in section *Acceptance test procedure* (page *30*).

Use only ABB approved spare parts.

Record all maintenance and proof test activities in the machine logbook.

Proof test interval

After the operation of the circuit is validated at start-up, the STO function shall be maintained by periodic proof testing. In high demand mode of operation, the maximum proof test interval is 20 years. In low demand mode of operation, the maximum proof test interval is 2 years (high or low demand as defined in IEC 61508, EN/IEC 62061 and EN ISO 3849-1). The test procedure is given in section *Acceptance test procedure* (page *30*).

The person responsible for the design of the complete safety function should also note the Recommendation of Use CNB/M/11.050 published by the European co-ordination of Notified Bodies concerning dual-channel safety-related systems with electromechanical outputs:

- When the safety integrity requirement for the safety function is SIL 3 or PL e (cat. 3 or 4), the proof test for the function must be performed at least every month.
- When the safety integrity requirement for the safety function is SIL 2 (HFT = 1) or PL d (cat. 3), the proof test for the function must be performed at least every 12 months.

This is a recommendation and depends on the required (not achieved) SIL/PL. For example, safety relays, contactor relays, emergency stop buttons, switches etc. are typically safety devices which contain electromechanical outputs. The STO circuit of the inverter unit does not contain any electromechanical components.

Competence

The maintenance and proof test activities of the safety function must be carried out by a competent person with adequate expertise and knowledge of the safety function as well as functional safety, as required by IEC 61508-1 clause 6.

Fault tracing

Warning messages generated by the drive

Warning	Cause	What to do
START INHIBI	Safe torque off function has been activated while the drive was stopped.	Close Safe torque off function switch. If the switch is closed and the warning is still active, check power supply at ASTO board input terminals. Replace ASTO board.

Fault messages generated by the drive

Fault	Cause	What to do
GD DISABLED X	ASTO board power supply of parallel-connected R8i inverter module has been switched off during run. X (1…12) refers to inverter module number.	Check Safe torque off function circuit of this module (X). Replace ASTO board of R8i inverter module.
START INHIBI	Safe torque off has been activated during motor run or motor start command has been given when Safe torque off is active.	Close Safe torque off function switch. If the switch is closed and the fault is still active, check power supply at ASTO board input terminals. Replace ASTO board.

Any failures of the Safe torque off function must be reported to ABB.

6

Technical data

Contents of this chapter

This chapter contains the technical details of the ASTO-11 and ASTO-21 boards, the safety data for the STO components and example information of safety relays and activation switches. It also lists the related standards and directives, and contains the TÜV certificate and declarations of conformity with the European Machinery Directive.

STO components

ASTO-11/21 board

ASTO-11 and ASTO-21 board	
Supply voltage range	+24 V DC +/- 10%
Current consumption	40 mA (20 mA/channel)
Supply cable	A single-shielded twisted pair
Maximum cable length	300 m
Conductor min. cross section	0.5 mm^2, 20 AWG
Logic levels	"0" < 5 V DC, "1" > 17 V DC
Ambient temperature	0…50 °C
Relative humidity	Max. 90%, no condensation allowed
Altitude in operation	0…2000 m
ASTO-11 board	
Dimensions	167 x 128 x 52 mm (height x weight x depth)
Weight	0.75 kg
Degree of protection	IP20

Note: Supply from semiconductor safety output with test pulse may lead to unnecessary trips. Contact ABB for further information.

ASTO board according to frame size of the module

Frame size	ASTO-11/21 board
R2i…R5i	ASTO-11
R2…R6	ASTO-11
R7i…R8i	ASTO-21
R7…R8	ASTO-21

Note: In frame sizes R2…R6 of the ACS800-01, -U1, -04, -04M, -04LC, -U4, -11, -U11, -31 and -U31 drives the ASTO board is ASTO-11 with enclosure. In frames R7…R8 and R2i…R8i the ASTO board is inside the drive module.

Dimensions of the ASTO board with enclosure

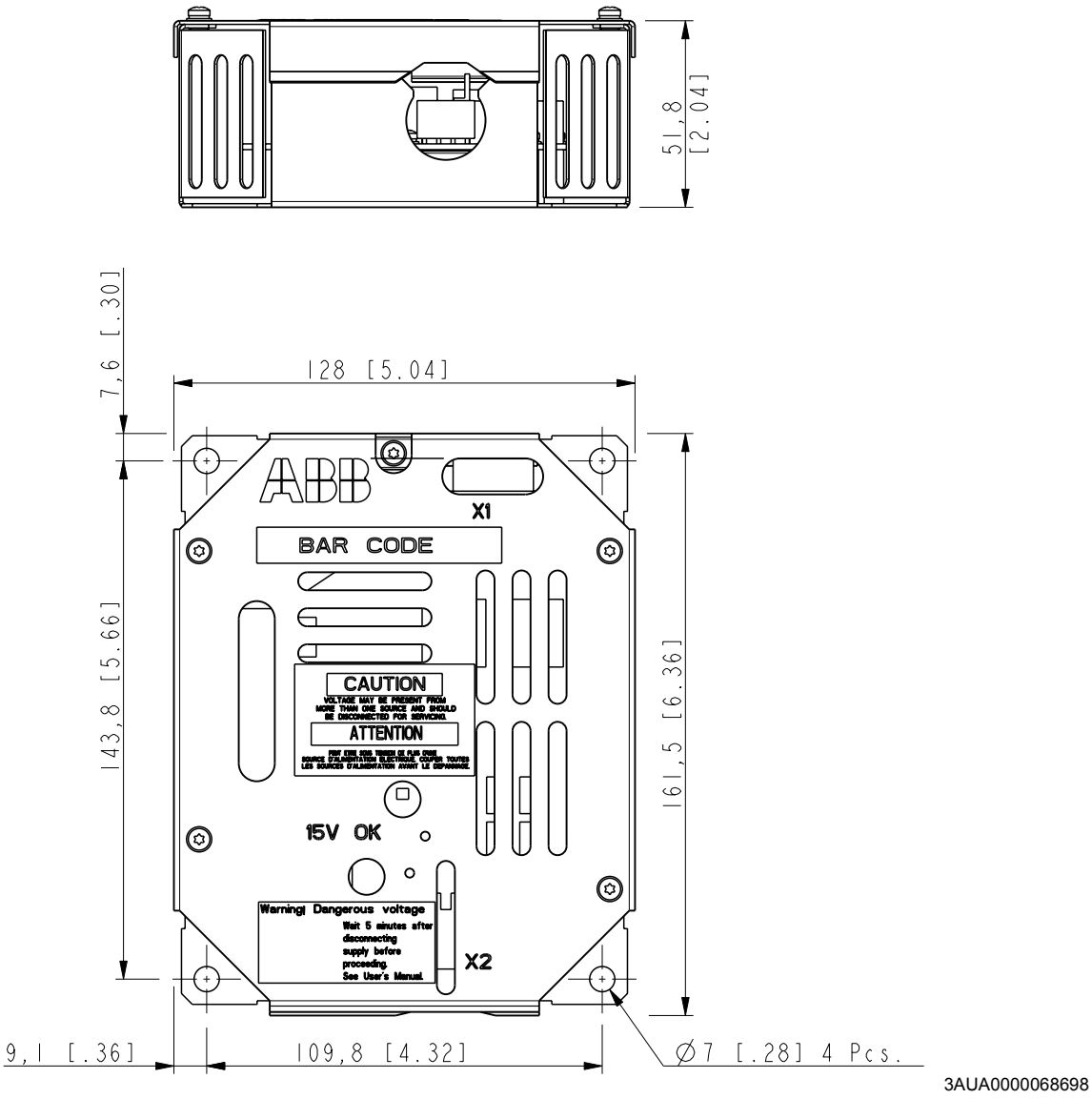

STO safety relay type

General requirements	IEC 61508 and/or EN/ISO 13849-1
Example 1	Simple SIL3 approved safety relay
Type and manufacturer	DOLD LG 5925.48/60 AC/DC 24 V ABB BT50 24DC
Approvals	SILCL 3 according to EN 62061 and PL e according to EN ISO 13849-1
Example 2	Programmable safety logic
Type and manufacturer	ABB AC500-S
Approvals	IEC 61508, SIL3; and EN ISO 13849-1, PL e

Push-button to be used with emergency stop

Type	A push-button operated switch with a palm or mushroom head type. Actuators of emergency stop devices are colored red.
Example	ABB CE4T-10R-02

Switch to be used with Prevention of unexpected start-up function implemented with STO

Type	A lockable selector switch with a reliable and unambiguous indication of positions.
Example	Kraus & Naimer DH11 A291-600, FT22-V+S0V845/A11/D11

Safety data

Note: The safety relay is not included in the safety data given in this chapter.

STO in ACS800 drives and inverter modules

The data applies to both air-cooled and liquid-cooled modules.

Frame size	SIL/ SILCL	SC	PL	SFF (%)	PFH (1/h) T1 =20 a	PFD T1= 2 a	$MTTF_d$ (a)	DC (%)	Cat.	HFT	CCF	Lifetime (a)
R2, R2i	2	2	d	>90	3,63E-10	3.54E-06	5373	≥90	2	0	65	20
R3, R3i	2	2	d	>90	3.63E-10	3.54E-06	5373	≥90	2	0	65	20
R4, R4i	2	2	d	>90	8.11E-10	7.50E-06	4987	≥90	2	0	65	20
R5, R5i	2	2	d	>90	5.67E-10	5.34E-06	5190	≥90	2	0	65	20
R6	2	2	d	>90	3.97E-10	3.85E-06	5341	≥90	2	0	65	20
R7, R7i, R8, R8i	2	2	d	>90	8.72E-10	8.03E-06	4993	≥90	2	0	65	20

3AXD10000342876 Rev A

Multiples of frame size R8i

Above values for frame sizes R7/R7i/R8/R8i apply for the multiples of frame size R8i, except for values of PFH, PFD and $MTTF_d$. These values are listed below.

Frame size	PFH (1/h) T1 =20 a	PFD T1= 2 a	$MTTF_d$ (a)
2×R8i	1.74E-09	1.61E-05	2497
3×R8i	2.62E-09	2.41E-05	1664
4×R8i	3.49E-09	3.21E-05	1248
5×R8i	4.36E-09	4.01E-05	999
6×R8i	5.23E-09	4.82E-05	832
7×R8i	6.10E-09	5.62E-05	713
8×R8i	6.97E-09	6.42E-05	624
9×R8i	7.85E-09	7.23E-05	555
10×R8i	8.72E-09	8.03E-05	499
11×R8i	9.59E-09	8.83E-05	454
12×R8i	1.05E-08	9.63E-05	416

3AXD10000342876 Rev A

- The following temperature profile is used in safety value calculations:
  - 670 on/off cycles per year with $\triangle T$ = 71.66 °C
  - 1340 on/off cycles per year with $\triangle T$ = 61.66 °C
  - 30 on/off cycles per year with $\triangle T$ = 10.0 °C
  - 32 °C board temperature at 2.0% of time
  - 60 °C board temperature at 1.5% of time
  - 85 °C board temperature at 2.3% of time.
- The STO is a type A safety component as defined in IEC 61508-2.
- Relevant failure modes:
  - The STO trips spuriously (safe failure)
  - The STO does not activate when requested

  A fault exclusion on the failure mode “short circuit on printed circuit board” has been made (EN 13849-2, table D.5). The analysis is based on an assumption that one failure occurs at one time. No accumulated failures have been analyzed.
- Reaction times are described in section *STO function activation and indication response times* on page *14*.

Related standards and directives

The Safe torque off function of the inverter complies with these standards:

Standard	Name
EN 60204-1:2006 + AC:2010 IEC 60204-1:2005 + A1:2008	*Safety of machinery – Electrical equipment of machines – Part 1: General requirements*
IEC 61508-1:2010	*Functional safety of electrical/electronic/programmable electronic safety-related systems – Part 1: General requirements*
IEC 61508-2:2010	*Functional safety of electrical/electronic/programmable electronic safety-related systems – Part 2: Requirements for electrical/electronic/ programmable electronic safety-related systems*
IEC 61511:2003	*Functional safety – Safety instrumented systems for the process industry sector*
IEC/EN 61800-5-2:2007	*Adjustable speed electrical power drive systems – Part 5-2: Safety requirements – Functional*
IEC/EN 62061:2005 + AC:2010 +A1:2013	*Safety of machinery – Functional safety of safety-related electrical, electronic and programmable electronic control systems*
EN ISO 13849-1:2008 + AC:2009	*Safety of machinery – Safety-related parts of control systems – Part 1: General principles for design*
EN ISO 13849-2:2012	*Safety of machinery – Safety-related parts of control systems – Part 2: Validation*
2006/42/EC	*European Machinery Directive*

The Safe torque off function also corresponds to Prevention of unexpected start-up as specified by EN 1037:1995 + A1:2008 and Uncontrolled stop (stop category 0) as specified in EN 60204-1:2006 + AC:2010.

Compliance with the European Machinery Directive

The drive is an electronic product which is covered by the European Low Voltage Directive. However, the drive internal safety function of this manual (option +Q967) is in the scope of the Machinery Directive as a safety component. This function complies with European harmonized standards such as EN/IEC 61800-5-2. The declarations of conformity are given below.

TÜV certificate

DAkkS
Deutsche
Akkreditierungsstelle
D-ZE-11074-01-00

TÜV NORD

Certificate

No. SEBS-A.160353/14 V.1.0

TÜV NORD Systems GmbH & Co. KG hereby certifies

ABB Oy
Hiomotie 13
FI-00381 Helsinki
Finland

that the

ACS800 -01, -U1, -04, -04M, -04LC, -U4
ACS800 -11, -U11, -31, -U31, -14,
ACS800 -104, -104LC, -107, -107LC,
ACS800 -07, -07LC, -U7, -17, -17LC, -37, -37LC

with the safety function Safe Torque Off (STO), meet the requirements listed in the following standards

- IEC 61508 part 1:2010; part 2:2010; capable up to SIL 2
- ISO 13849-1:2006, ISO 13849-2:2012; capable up to PL d (category 2)
- IEC 62061:2012; capable up to $SIL_{CL}2$
- IEC 61800-5-2:2007; capable up to SIL 2

The drive series can also be used in safety applications up to SIL 2 according to IEC 61511

Base of certification is the report SEBS-A.160353/14TB in the valid version.

This certificate entitles the holder to use the pictured safety approved mark.

Expiry date: 2020-02-26
Reference No: 8111571685

Hamburg, 2015-02-26

T. Nelke

Certification Body SEECERT
TÜV NORD Systems GmbH & Co. KG
Große Bahnstraße 31, 22525 Hamburg, Germany

Please note our Test and Certification-Regulation on the back

Voluntary Certification

TÜV NORD
TÜV NORD Systems GmbH & Co. KG
Safety Approved
ACS800 series
IEC 61508:2010 SIL2
IEC 61800-5-2:2007 SIL2
ISO 13849-1:2006 PLd
ISO 13849-2:2012 PLd
IEC 62061:2012 $SIL_{CL}2$
SEBS-A.160353/14

Declarations of Conformity

Declaration of Conformity

(According to Machinery Directive 2006/42/EC)

Manufacturer: ABB Oy, Drives
Address: Hiomotie 13, P.O Box 184, 00381 Helsinki, Finland.

hereby declares that products

ACS800-01/-U1; ACS800-04/-U4 (frames R2-R8); ACS800-04M; ACS800-11/-U11; ACS800-31/-U31

with regard to the safety function

Safe torque off (option code +Q967)

fulfil all the relevant safety component requirements of EC Machinery Directive 2006/42/EC, when the listed safety functions are used for safety component functionality.

The following harmonized standards below were used:

EN 61800-5-2: 2007	*Adjustable speed electrical power drive systems – Part 5-2: Safety requirements - Functional*
EN 62061: 2005 + A1: 2013	*Safety of machinery – Functional safety of safety-related electrical, electronic and programmable electronic control systems*
EN ISO 13849-1: 2008 + AC: 2009	*Safety of machinery – Safety-related parts of control systems. Part 1: General requirements*
EN ISO 13849-2: 2012	*Safety of machinery – Safety-related parts of the control systems. Part 2: Validation*
EN 60204-1: 2006 + AC: 2010	*Safety of machinery – Electrical equipment of machines – Part 1: General requirements*

Other used standards:

IEC 61508 ed. 2: 2010	Functional safety of electrical / electronic / programmable electronic safety-related systems

The products referred in this Declaration of Conformity fulfil the relevant provisions of the Low Voltage Directive 2006/95/EC and EMC Directive 2004/108/EC. Declaration of conformity according to these directives is available from the manufacturer.

Person authorized to compile the technical file:

Name: Timo Pasanen
Address: P.O. Box 184, 00381 Helsinki, Finland

Helsinki, 2 Jan 2015

Tuomo Höysniemi

Vice President
ABB Oy
3AXD10000392172

Page: 1/1

Declaration of Conformity

(According to Machinery Directive 2006/42/EC)

Manufacturer: ABB Oy, Drives
Address: Hiomotie 13, P.O Box 184, 00381 Helsinki, Finland.

hereby declares that products

ACS800-04 (frames nxR8i)**; ACS800-04LC; ACS800-14; ACS800-104; ACS800-104LC**

with regard to the safety function

Safe torque off (option code +Q967)

fulfil all the relevant safety component requirements of EC Machinery Directive 2006/42/EC, when the listed safety functions are used for safety component functionality.

The following harmonized standards below were used:

EN 61800-5-2: 2007	*Adjustable speed electrical power drive systems – Part 5-2: Safety requirements - Functional*
EN 62061: 2005 + A1: 2013	*Safety of machinery – Functional safety of safety-related electrical, electronic and programmable electronic control systems*
EN ISO 13849-1: 2008 + AC: 2009	*Safety of machinery – Safety-related parts of control systems. Part 1: General requirements*
EN ISO 13849-2: 2012	*Safety of machinery – Safety-related parts of the control systems. Part 2: Validation*
EN 60204-1: 2006 + AC: 2010	*Safety of machinery – Electrical equipment of machines – Part 1: General requirements*

Other used standards:

IEC 61508 ed. 2: 2010	Functional safety of electrical / electronic / programmable electronic safety-related systems

The products referred in this Declaration of Conformity fulfil the relevant provisions of the Low Voltage Directive 2006/95/EC and EMC Directive 2004/108/EC. Declaration of conformity according to these directives is available from the manufacturer.

Person authorized to compile the technical file:

Name: Ilpo Kangas
Address: P.O. Box 184, 00381 Helsinki, Finland

Helsinki, 2 Jan 2015

Peter Lindgren

Vice President
ABB Oy

3AXD10000083356

Page: 1/1

Further information

Product and service inquiries

Address any inquiries about the product to your local ABB representative, quoting the type designation and serial number of the unit in question. A listing of ABB sales, support and service contacts can be found by navigating to www.abb.com/searchchannels.

Product training

For information on ABB product training, navigate to www.abb.com/drives and select *Training courses*.

Providing feedback on ABB Drives manuals

Your comments on our manuals are welcome. Go to www.abb.com/drives and select *Document Library – Manuals feedback form (LV AC drives)*.

Document library on the Internet

You can find manuals and other product documents in PDF format on the Internet. Go to www.abb.com/drives and select *Document Library.* You can browse the library or enter selection criteria, for example a document code, in the search field.

Contact us

www.abb.com/drives
www.abb.com/drivespartners

3AUA0000063373 Rev H (EN) 2015-03-12

Power and productivity
for a better world™