ABB Drives

# User's Manual

# Analogue I/O Extension Module RAIO-01

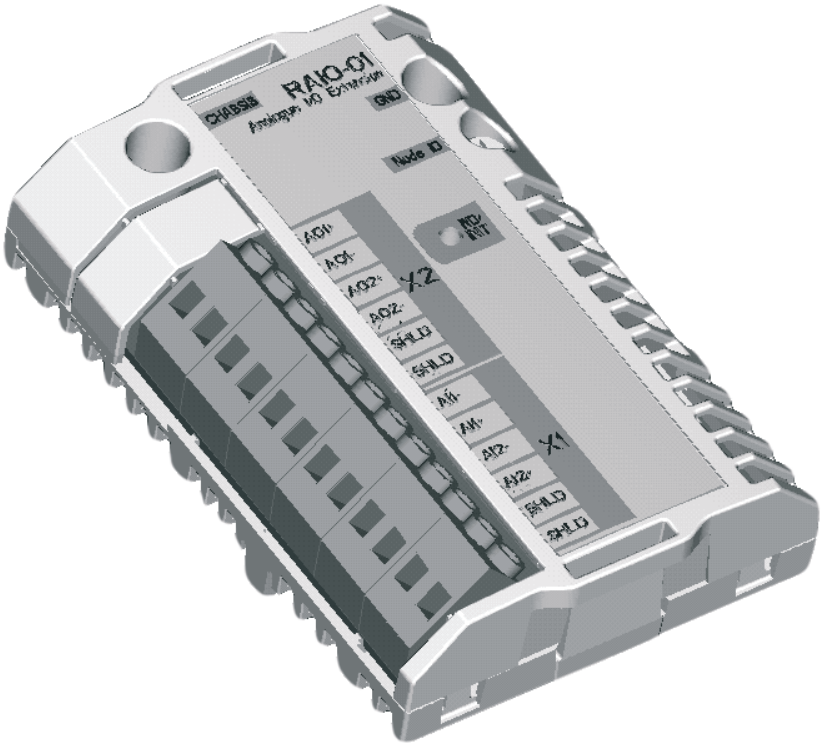

# Analogue I/O Extension Module RAIO-01

# User's Manual

3AFE64484567 REV B EN

EFFECTIVE: 2009-04-21

© 2009 ABB Oy. All Rights Reserved.

# Safety instructions

## Overview

This chapter states the general safety instructions that must be followed when installing and operating the RAIO-01 Analogue I/O Extension module.

The material in this chapter must be studied before attempting any work on, or with, the unit.

In addition to the safety instructions given below, read the complete safety instructions of the specific drive you are working on.

## General safety instructions

**WARNING!** All electrical installation and maintenance work on the drive should be carried out by qualified electricians only.

The drive and adjoining equipment must be properly earthed.

Do not attempt any work on a powered drive. After switching off the mains, always allow the intermediate circuit capacitors 5 minutes to discharge before working on the frequency converter, the motor or the motor cable. It is good practice to check (with a voltage indicating instrument) that the drive is in fact discharged before beginning work.

The motor cable terminals of the drive are at a dangerously high voltage when mains power is applied, regardless of motor operation.

There can be dangerous voltages inside the drive from external control circuits even when the drive mains power is shut off. Exercise appropriate care when working on the unit. Neglecting these instructions can cause physical injury or death.

# Table of contents


***Safety instructions***

Overview . . . . . 5
General safety instructions. . . . . 5

***Table of contents***

***Chapter 1 – Introduction***

Intended audience . . . . . 9
Before you start . . . . . 9
What this manual contains . . . . . 10

***Chapter 2 – Overview***

Overview . . . . . 11
The RAIO-01 module . . . . . 11
  Module layout . . . . . 11
  Delivery check . . . . . 12
  Compatibility . . . . . 12
  Warranty and liability information . . . . . 12

***Chapter 3 – Installation***

Mounting . . . . . 13
  Mounting onto RMIO board . . . . . 13
  Mounting onto AIMA adapter . . . . . 14
Removing and refitting the cover of the enclosure. . . . . 15
Switches. . . . . 15
Input mode selection . . . . . 16
Input signal type selection . . . . . 17
Terminal designations . . . . . 18
Wiring . . . . . 19
Node ID selection. . . . . 20
Programming . . . . . 20

### *Chapter 4 – Fault tracing*

Status LED . . . . . .21
Option slot installation . . . . . .21
AIMA-01 I/O Module Adapter installation . . . . . .21

### *Appendix A – Technical data*

# Chapter 1 – Introduction

### Intended audience

The manual is intended for the people who are responsible for commissioning and using an RAIO-01 Analogue I/O Extension module with the ACS800 drive. The reader is expected to have a basic knowledge of electrical fundamentals, electrical wiring practices and how to operate the drive.

### Before you start

It is assumed that the drive is installed and ready to operate before starting the installation of the extension module.

In addition to conventional installation tools, have the drive manuals available during the installation as they contain important information not included in this manual. The drive manuals are referred to at various points of this document.

## What this manual contains

This manual contains information on the wiring, configuration and use of the RAIO-01 module.

***Safety instructions*** are featured in the first few pages of this manual.

***Chapter 2 – Overview*** contains a short description of the RAIO-01 Analogue I/O Extension module, a delivery checklist and warranty information.

***Chapter 3 – Installation*** contains instructions for module hardware settings, mounting and cabling.

***Chapter 4 – Fault tracing*** explains fault tracing and the LED indications of the RAIO-01 module.

***Appendix A*** contains technical data.

# Chapter 2 – Overview

## Overview

This chapter contains a short description of the Analogue I/O Extension module, a delivery checklist and warranty information.

## The RAIO-01 module

The RAIO-01 Analogue I/O Extension module offers two bipolar current (±0[4]…20 mA) or voltage (±0[2]…10 V or ±0…2 V) inputs and two unipolar current (0[4]…20 mA) outputs with 12-bit resolution. The analogue inputs and outputs are galvanically isolated as a group from each other and the power supply.

### Module layout

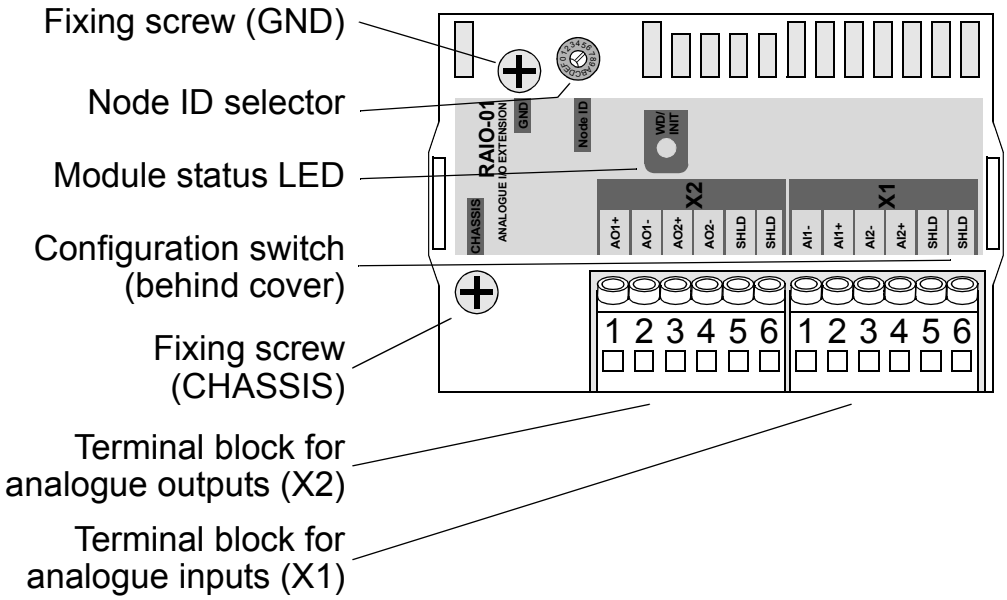

### Delivery check

The option package contains:

- RAIO-01 module
- Two screws
- This manual.

### Compatibility

The RAIO-01 is compatible with the ACS800 Standard Application Program version ASXR7000 or later.

### Warranty and liability information

The warranty for your ABB drive and options covers manufacturing defects. The manufacturer carries no responsibility for damage due to transport or unpacking.

In no event and under no circumstances shall the manufacturer be liable for damages and failures due to misuse, abuse, improper installation, or abnormal conditions of temperature, dust, or corrosives, or failures due to operation above rated capacities. Nor shall the manufacturer ever be liable for consequential and incidental damages.

The period of manufacturer's warranty is 12 months, and not more than 18 months, from the date of delivery. Extended warranty may be available with certified start-up. Contact your local distributor for details.

Your local ABB Drives company or distributor may have a different warranty period, which is specified in their sales terms, conditions, and warranty terms.

If you have any questions concerning your ABB drive, contact your local distributor or ABB Drives office.

The technical data and specifications are valid at the time of printing. ABB reserves the right to subsequent alterations.

# Chapter 3 – Installation

**WARNING!** Follow the safety instructions given in this guide and in the *Hardware Manual* of the drive.

## Mounting

The RAIO-01 is to be inserted into an optional module slot on either the RMIO board of the drive, or on an AIMA-01 I/O Module Adapter. The module is held in place with plastic retaining clips and two screws. The screws also provide the earthing of the I/O cable shield connected to the module, and interconnect the GND signals of the module and the RMIO board/AIMA adapter.

On installation of the module, the signal and power connection to the drive is automatically made through a 38-pin connector.

### Mounting onto RMIO board

1. Insert the module carefully into SLOT 1 or SLOT 2 on the RMIO board of the drive until the retaining clips lock the module into position.
2. Fasten the two screws (included) to the stand-offs.

***Note:*** Correct installation of the screws is essential for fulfilling the EMC requirements and for proper operation of the module.

3. Remove the cover of the module enclosure (see page 15).
4. Set the configuration DIP switches of the module to the required position (pages 16 and 17) and refit the cover.

***Mounting onto AIMA adapter***

1. Insert the module carefully into SLOT 1, SLOT 2 or SLOT 3 on the AIMA adapter until the retaining clips lock the module into position.
2. Fasten the two screws (included) to the stand-offs.

---

***Note:*** Correct installation of the screws is essential for fulfilling the EMC requirements and for proper operation of the module.

---

3. Remove the cover of the module enclosure (see page 15).
4. Set the configuration DIP switches of the module to the required position (pages 16 and 17).
5. Set the node ID for the module (page 20) and refit the cover.

### Removing and refitting the cover of the enclosure

To choose operating mode and input signal type, the cover of the module enclosure must be removed. This can be done by carefully bending the two cover retaining clips with a small screwdriver (see Figure 1) and lifting the cover off.

Refit the cover by pushing it back into its place until the retaining clips lock it into position.

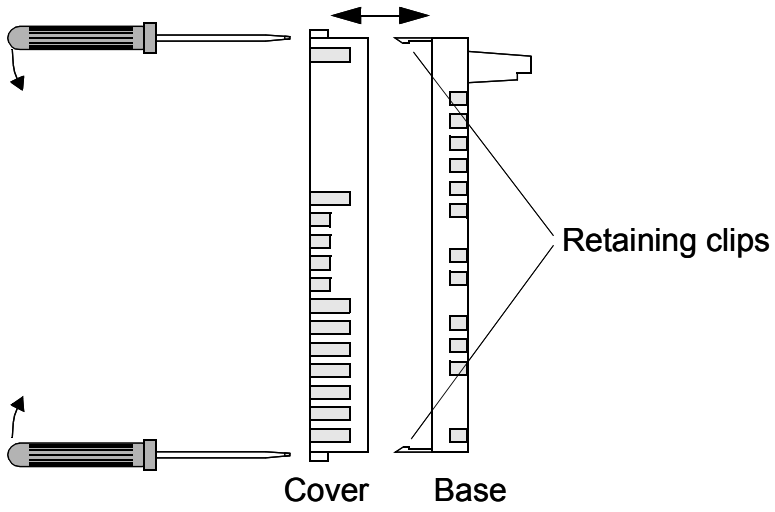


*Figure 1 Removing and refitting the cover*

### Switches

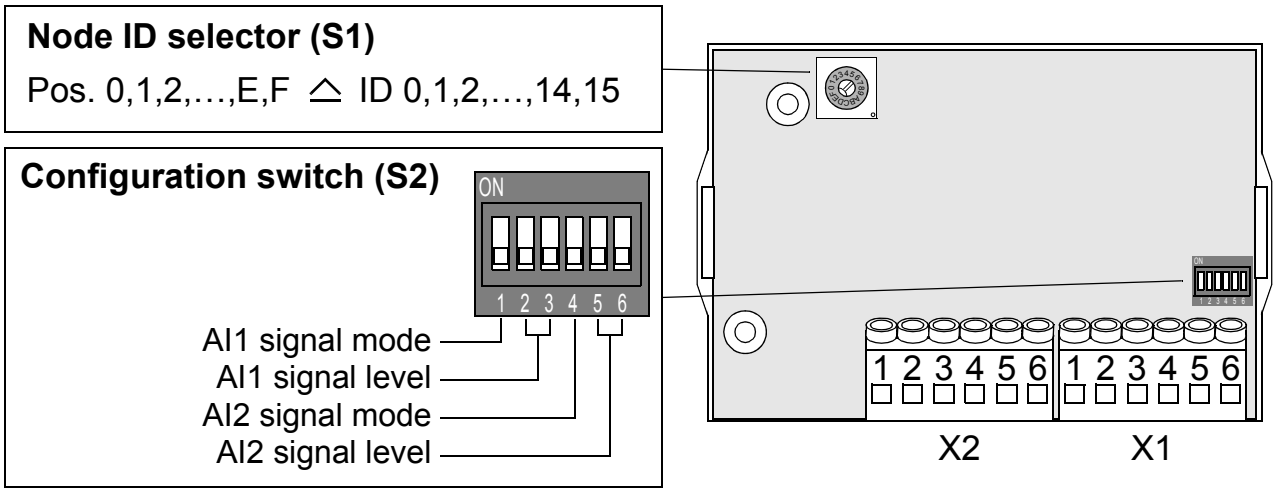


*Figure 2 Top view of the module, cover removed*

## Input mode selection

The operating mode of the analogue inputs can be selected using the configuration DIP switch (S2) on the circuit board of the module. The drive parameters must be set accordingly.

In bipolar mode, the analogue inputs can handle positive and negative signals. The resolution of the A/D conversion is 11 data bits (+ 1 sign bit). The way the drive interprets the negative range of the inputs depends on the settings of the drive. See the *Firmware Manual* of the drive.

In unipolar mode (default), the analogue inputs can handle positive signals only. The resolution of the A/D conversion is 12 data bits.

| DIP switch setting | | Input signal type |
|---|---|---|
| **Analogue input AI1** | **Analogue input AI2** | |
| 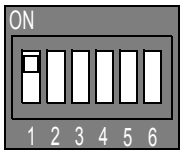 | 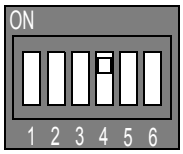 | ±0(4)…20 mA<br>±0(2)…10 V<br>±0…2 V |
| 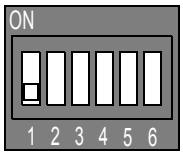 | 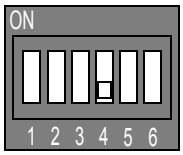 | 0(4)…20 mA<br>0(2)…10 V<br>0…2 V<br>(Default) |

### *Input signal type selection*

Each input can be used with a current or voltage signal. The selection is made with the configuration DIP switch (S2) on the circuit board of the module.

| Input signal type | DIP switch settings | |
|---|---|---|
| | **Analogue input 1** | **Analogue input 2** |
| Current signal ±0(4)…20 mA (Default) | 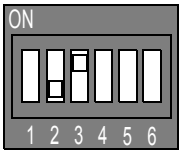  | 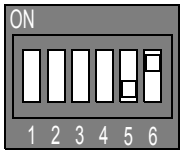  |
| Voltage signal ±0(2)…10 V | 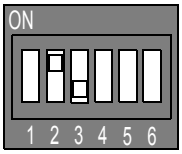  | 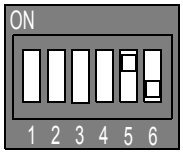  |
| Voltage signal ±0…2 V | 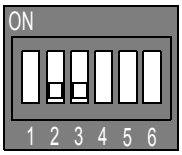  | 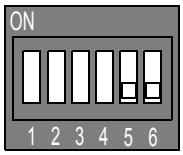  |

## *Terminal designations*

The RAIO-01 is equipped with two 6-pole non-detachable screw-type connectors. Terminal block X1 provides the connection for the analogue input signals, and X2 provides the connection for the analogue output signals. Each terminal block includes two terminals for the cable shield (see also Figure 3).

| X1 | Marking | Description | | |
|---|---|---|---|---|
| 1 | AI1- | Analogue input 1 | Current signal<br>±0(4)…20 mA<br><br>Input impedance 100 Ω<br><br>Galvanically isolated as a group (see page 24) from the analogue outputs, power supply and earth. | Voltage signal<br>±0(2)…10 V or ±0…2 V<br><br>Input impedance 200 kΩ<br><br>Galvanically isolated as a group (see page 24) from the analogue outputs, power supply and earth. |
| 2 | AI1+ | | | |
| 3 | AI2- | Analogue input 2 | | |
| 4 | AI2+ | | | |
| 5 | SHLD | Cable shield AC earthing. Connected via an RC circuit to the frame. | | |
| 6 | SHLD | | | |

| X2 | Marking | Description | |
|---|---|---|---|
| 1 | AO1+ | Current output 1 | Current signal<br>0(4)...20 mA<br><br>Load resistance max. 700 Ω<br><br>Galvanically isolated as a group (see page 24) from the analogue inputs, power supply and earth. |
| 2 | AO1- | | |
| 3 | AO2+ | Current output 2 | |
| 4 | AO2- | | |
| 5 | SHLD | Cable shield AC earthing (via an RC circuit to the frame). | |
| 6 | SHLD | | |

## Wiring

0.5 to 1.5 $mm^2$ twisted pair cable with individual and/or overall shields should be used for analogue signals. The shields should be connected to the SHLD terminals on the RAIO-01 module. See the example below.

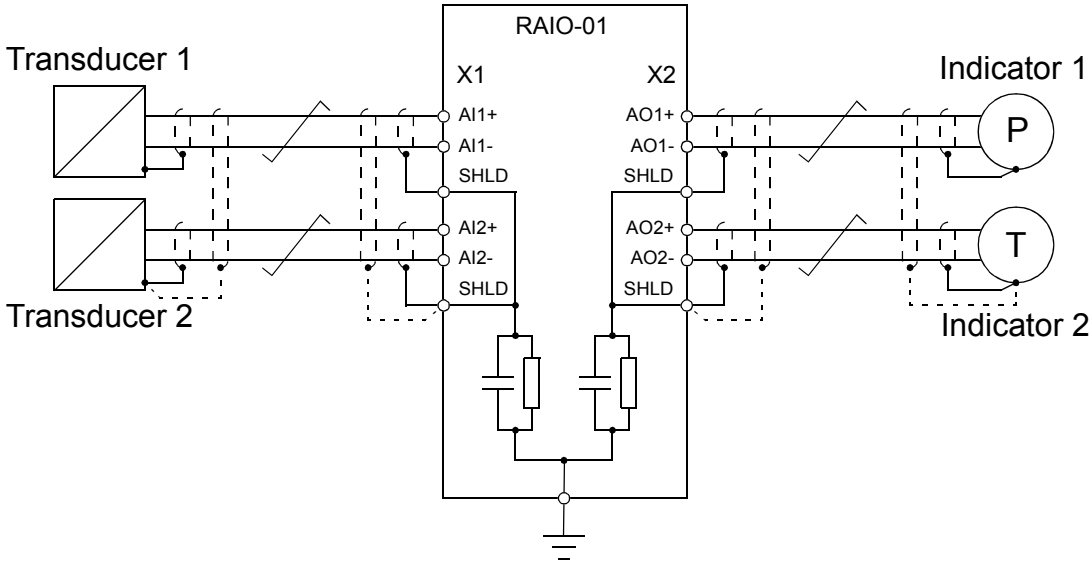


*Figure 3 Wiring example*

---

**Note:** If the transducers or indicators are located far away from each other, earth the shield at one unit through a capacitor (e.g. 10 nF/400 V) to avoid circulating earth current flow.

---

***Note:*** X1 and X2 have separate RC circuits as shown above, i.e. the SHLD terminals on one terminal block are connected together and earthed through a common RC circuit.

---

### Node ID selection

If the RAIO-01 module is mounted onto an external AIMA-01 I/O Module Adapter, choose the proper node ID for the module using the node ID selector (S1, range 1…15). Setting the node ID is not required when the module is mounted into SLOT 1 or SLOT 2 on the drive.

The default setting of selector S1 is 5.

### Programming

The communication between the module and the drive is activated by a drive parameter. (Ensure that the parameter settings correspond to the mode switch setting of the module.) The RAIO-01 can replace and/or extend certain standard inputs and outputs. See the drive *Firmware Manual*, Parameter Group 98.

---

***Note:*** The new settings take effect only when the module is powered up.

---

# Chapter 4 – Fault tracing

## Status LED

There is one status LED (WD/INIT, yellow) on the RAIO-01 module. The LED is lit when the drive is configuring the module at power-up.

*Option slot installation*

In case the LED does not go out after one second:

- The configuration has failed.
  - Cycle the power supply of the drive.
- The module has a hardware failure.
  - Ensure the 38-pin connector is properly inserted.
  - Contact an ABB service representative.

*AIMA-01 I/O Module Adapter installation*

- There is no communication with the drive.
  - Check that the drive is powered.
  - Check the module node ID.
  - Check that the fibre optic cables are connected correctly (transmitters to receivers) and the connectors properly inserted.
  - Check the fibre optic cables visually for dirt or flaws.
  - Ensure the 38-pin connector is properly inserted.
  - Try new fibre optic cables.
  - Contact an ABB service representative.

# Appendix A – Technical data

**Dimensions:**

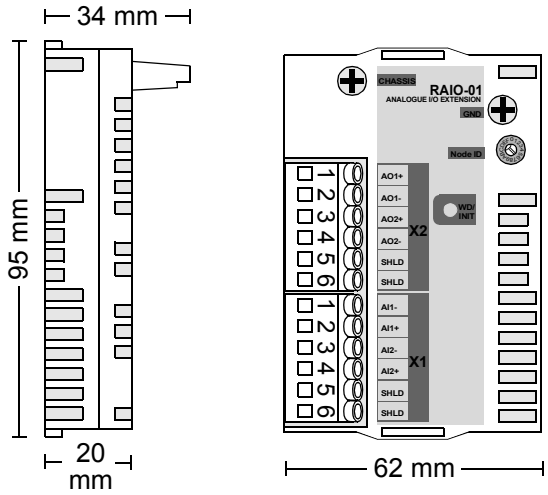


**Mounting:** Into an option slot of the RMIO board of the drive or onto external AIMA-01 I/O Module Adapter.

**Degree of protection:** IP 20

**Ambient conditions:** The applicable ambient conditions specified for the drive in its *Hardware Manual* are in effect.

**Hardware settings:**

- Rotary switch for node ID selection (range 1…15)
- One DIP switch per input for selection between bipolar mode (default) and unipolar mode
- Two DIP switches per input for signal type and level selection

**Connectors:**

- 38-pin parallel bus connector
- Two 6-pole non-detachable screw-type terminal blocks for max. 2.5 $mm^2$ wire

**Analogue inputs:**

- Signal types: ±(0)4…20 mA, ±(0)2…10 V, ±0…2 V
- Input impedance: 100 Ω (current), 200 kΩ (voltage)
- Resolution in unipolar mode: 0.024% (12 data bits)
- Resolution in bipolar mode: 0.048% (11 data bits + sign)
- Inaccuracy: ±0.5% (Full Scale Range) at 25 °C
  Temperature coefficient: ±100 ppm/°C max.
- Isolated from the analogue outputs and the module carrier board. The maximum continuous isolation voltage is 48 V rms; the maximum peak value is 100 V. The isolation towards the chassis potential (e.g. GND and +24 VDC of the module carrier board) has been tested at 1.5 kV AC for 1 s.
- Common mode voltage: ±15 V max.
- HW filtering: 2 ms approx.

**Analogue outputs:**

- Signal type: 0(4)...20 mA
- Load resistance max.: 700 Ω
- Resolution: 0.024% (12 bits)
- Inaccuracy: ±0.5% (Full Scale Range) at 25 °C
  Temperature coefficient: ±100 ppm/°C max.
- Isolated from the analogue inputs and the module carrier board. The maximum continuous isolation voltage is 48 V rms; the maximum peak value is 100 V. The isolation towards the chassis potential (e.g. GND and +24 VDC of the module carrier board) has been tested at 1.5 kV AC for 1 s.

**General**

- Max. power consumption:
  100 mA (5 V) + 120 mA (24 V)
  Both voltages supplied by the RMIO board or AIMA-01 I/O Module Adapter
- Estimated min. lifetime: 100 000 h
- All materials UL/CSA-approved
- Complies with EMC standards EN 50081-2 and EN 50082-2

RAIO-01
3AFE64484567 REV B EN
EFFECTIVE: 2009-04-21

**ABB Oy**
AC Drives
P.O. Box 184
FIN-00381 Helsinki
FINLAND
Telephone: +358 10 22 11
Fax: +358 10 222 2681
Internet: www.abb.com

**ABB Inc.**
Drives & Power Products
16250 West Glendale Drive
New Berlin, WI 53151
USA
Telephone: 262 785-8378
800 243-4384
Fax: 262 780-5135