Softstarters Type PSE18...PSE370
Installation and commissioning manual

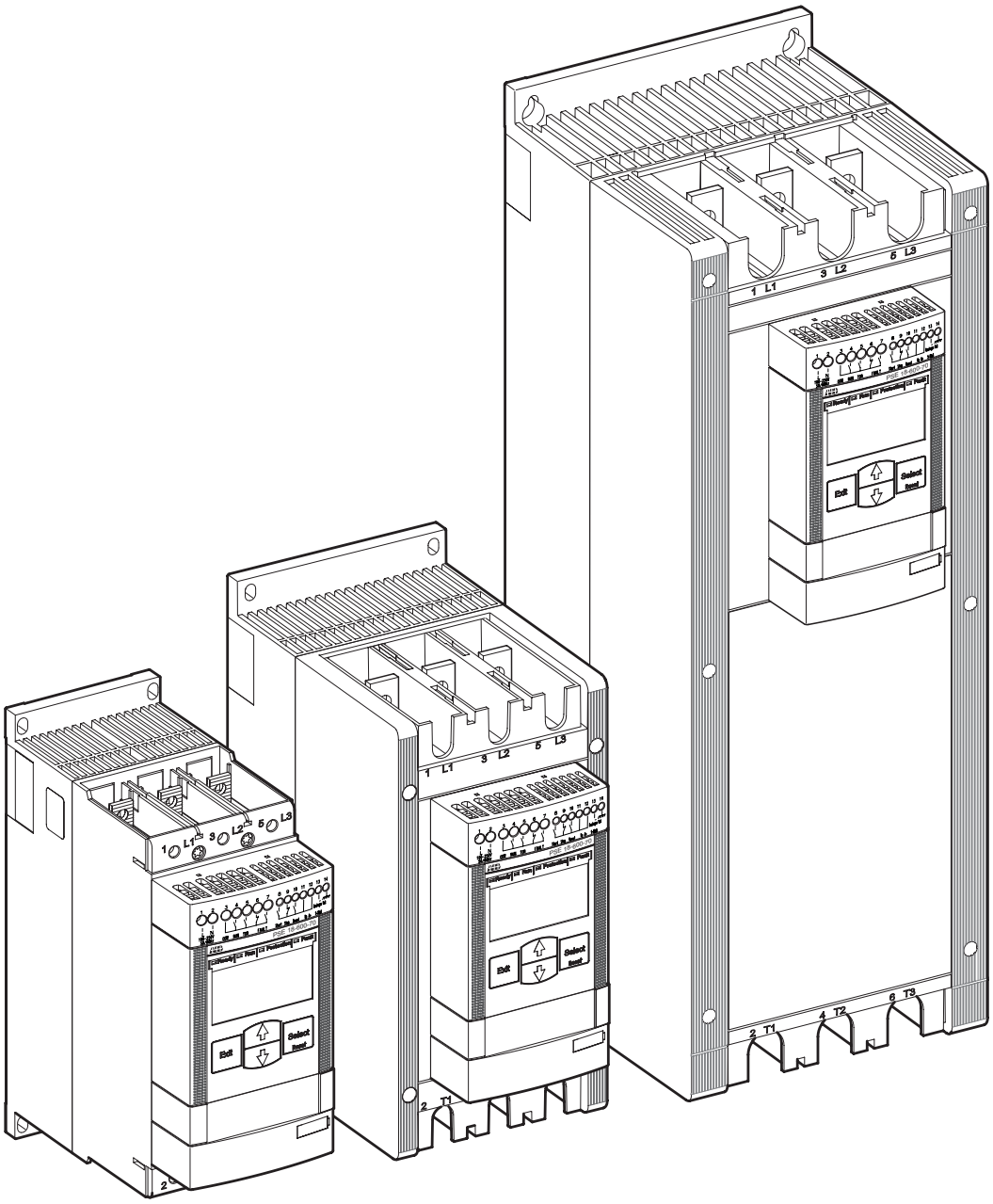

Power and productivity
for a better world™

This manual belongs to:

_____

Installation and Commissioning Manual

ABB Softstarters PSE18...PSE370

1 General

This is the Installation and Commissioning Manual for Softstarters Type PSE18… PSE370 based on software version 01.01.02.

Document number: 1SFC132057M0201

Revision: E

Issue date: 2011-01-25

Data subject to change without notice.

We reserve all rights to this document, even in the event that a patent is issued and a different commercial proprietary right is registered. Improper use, in particular reproduction and dissemination to third parties, is not permitted.

This document has been carefully checked. If the user nevertheless detects any errors, he is kindly asked to notify us as soon as possible.

The data contained in this manual is intended solely for the product description and is not to be deemed to be a statement of guaranteed properties. In the interests of our customers, we constantly seek to ensure that our products are developed to the latest technological standards.

As a result, there may be some differences between the softstarter and the information in this manual.

Author's address:

ABB AB
Cewe-Control
SE-721 61 Västerås, Sweden

Telephone: +46 (0) 21 32 07 00
Telefax: +46 (0)21 12 60 01

http://www.abb.com/lowvoltage

© Copyright 2012. All rights reserved. Specification subject to changes without notice.

2 Safety

This chapter describes warning and information signs used in this manual, which the user should pay attention to.
The softstarter shall be installed by authorized personnel only.
This manual is a part of the PSE Softstarter and should always be accessible to personnel working with this product.
The manual shall always be read through before performing any installation or commissioning tasks.

2.1 Use of signs caution, warning and information

Caution!

Caution icon indicates the presence of a hazard which could result in personal injury.

Warning!

Warning icon indicates the presence of a hazard which could result in damage to equipment or property.

Information

Information sign alerts the reader to pertinent facts and conditions.

Chapter

1 Introduction 7

2 Quickstart 11

3 Description 15

4 Mounting 27

5 Connection 31

6 Human-Machine Interface (HMI)..... 45

7 Functions and configuration 55

8 Fieldbus communication 79

9 Maintenance 81

10 Troubleshooting 83

11 Wiring diagrams..... 95

12 Index 99

Customer feedback report..... 102

Notes

Chapter 1 Introduction

Documentation for PSE18...PSE370 softstarter 8
Installation and Commissioning 8
Intended audience 9
General 9
Requirements 9
Revision notes and other documents 9
Acronyms and abbreviations 10
Explanation of concepts 10

Chapter 1 Introduction

1.1 Documentation for PSE18...PSE370 soft-starter

For the Softstarter Type PSE18...PSE370, the following manuals are available:

1SFC132059M9901 (User manual short form, printed)
1SFC132057M0201 (English version, PDF-file)

In the future, the following documents will be available as PDF-files:

1SFC132057M3401 (Swedish)
1SFC132057M0101 (German)
1SFC132057M0301 (French)
1SFC132057M0901 (Italian)
1SFC132057M0701 (Spanish)
1SFC132057M1601 (Portuguese)
1SFC132057M3101 (Dutch)
1SFC132057M4001 (Polish)
1SFC132057M1101 (Russian)
1SFC132057M1801 (Finnish)
1SFC132057M1901 (Turkish)
1SFC132057M1301 (Arabic)
1SFC132057M2001 (Chinese)

Please check: *www.abb.com/lowvoltage/.* On this site select the link Control Products and then continue to Softstarters.

1.2 Installation and Commissioning Manual

This manual contains instructions on how to install, commission and maintain the softstarter. The manual covers procedures for mechanical and electrical installation, and installation of communication devices. It also covers energizing, setting, and configuration and verifying settings.

For brief information see Softstarters Type PSE18...PSE370 User Manual short form, containing the same languages as the Installation and Commissioning Manual. Softstarters Type PSE18...PSE370 User Manual short form has document ID 1SFC132059M9901.

For quickest possible start, read Chapter 2 Quickstart or go to the short form manual (1SFC132059M9901).

A complete compilation of ABB's softstarters can be found in Main catalogue Softstarters, document ID 1SFC132005C0201.

1.2.1 Intended audience

1.2.1.1 General

The installation and commissioning manual is intended for the installation, commissioning, and maintenance personnel responsible for getting the softstarter into normal service and out of service.

1.2.1.2 Requirements

The installation personnel must have a basic knowledge in handling electric equipment. The commissioning and maintenance personnel must be well experienced in using this kind of equipment.

1.2.2 Revision notes and other documents

For latest information on revisions and other documents related to the PSE Softstarters, please check *www.abb.com/lowvoltage/*. On this site select the link Control Products and then continue to Softstarters.

1.2.3 Acronyms and abbreviations

The acronyms and abbreviations described in table 1.1 are used in this manual.

Table 1.1

Acronym/ abbre-viation	Description
BP	By-pass
DOL	Direct-on-line
EOL	Electronic overload protection for the Motor
FB	Fieldbus
FBP	FieldBusPlug
HMI	Human-Machine Interface
I_e	Rated operational current
IT	Information Technology
LCD	Liquid Crystal Display
LED	Light Emitting Diode
PCB	Printed Circuit Board
PLC	Programmable Logic Controller
PTC	Positive Temperature Coefficient
SC	Short Circuit
SCR	Silicon Controlled Rectifier (thyristor)
TOR	Top of Ramp (full voltage/Full-On)
U_C	Rated control circuit voltage *
U_e	Rated operational voltage *
U_S	Rated control supply voltage *

*) For definition see IEC 60947-1 edition 5.0

1.2.4 Explanation of concepts

The setting of current I_e is the setting for the rated operational current (main current) of the motor.

U_e = Rated operational voltage on the motor's operational current (three phase main voltage feeding the motor).
U_S = Rated control supply voltage, feeding the electronics in the softstarter.
U_C = Rated control voltage, used for controlling the softstarter.

Chapter 2 Quickstart

Quickstart 12

Chapter 2 Quickstart

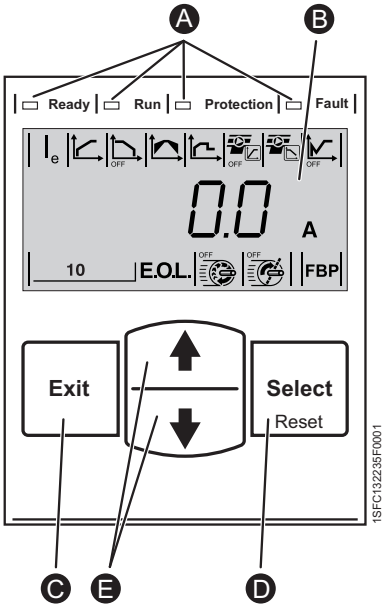

Figure 2.1:

- **A** LED status indicators.
- **B** LCD display with backlight.
- **C** Exit key for cancelling parameter edits and moving up one menu level.
- **D** Select/Reset key for changing and storing parameter values, moving down one menu level, and to reset tripping events.
- **E** Navigation keys for navigating the menu and changing parameter values. Flashing numbers or text shown in the display indicates that the menu/value can be changed or scrolled.

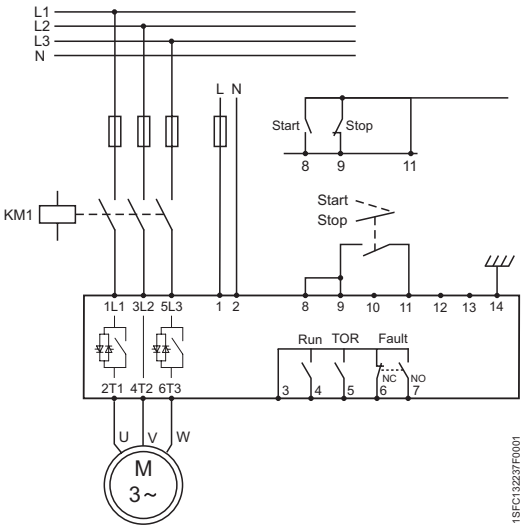

Figure 2.2: Example connection of PSE Softstarter

This chapter is a short guide on how to connect, configure and start the softstarter in the easiest way.

This product has been carefully manufactured and tested but there is a risk that damage can occur from abnormal handling during transportation. Therefore, the procedure below should be followed during initial installation:

Warning!
Mounting, electrical connection and settings of the softstarter shall be made in accordance with existing laws and regulations and be performed by authorized personnel.

Warning!
Connecting Softstarters PSE18...PSE370 Inside Delta will cause damage to the equipment, and there is a risk of death or serious injury.

In Line *Inside Delta*

Warning!
Before connecting the Softstarters PSE size 18...PSE170 to operational supply voltage for the first time, the control supply voltage must be turned on to ensure that the by-pass relays are in the open position. This is necessary to avoid unintentional starting of the equipment during the connection.

1. Be aware of the ambient temperature. Derating is required above 40 °C (104 °F). See chapter 3.6.
2. Mount the softstarter according to Chapter 4 Mounting.

Caution!
Hazardous voltage. Will cause death or serious injury. Turn off and lock out all power supplying this device before starting work on this equipment.

3. Connect the terminals 1L1, 3L2 and 5L3 to the operational voltage on the power supply line side.
4. Connect the terminals 2T1, 4T2 and 6T3 to the motor.

Warning!
Capacitors for power factor compensation are not allowed between the softstarter and the motor, since this can cause current peaks which can damage the thyristors in the softstarter. If such capacitors are to be used, they should be connected on the line side of the softstarter.

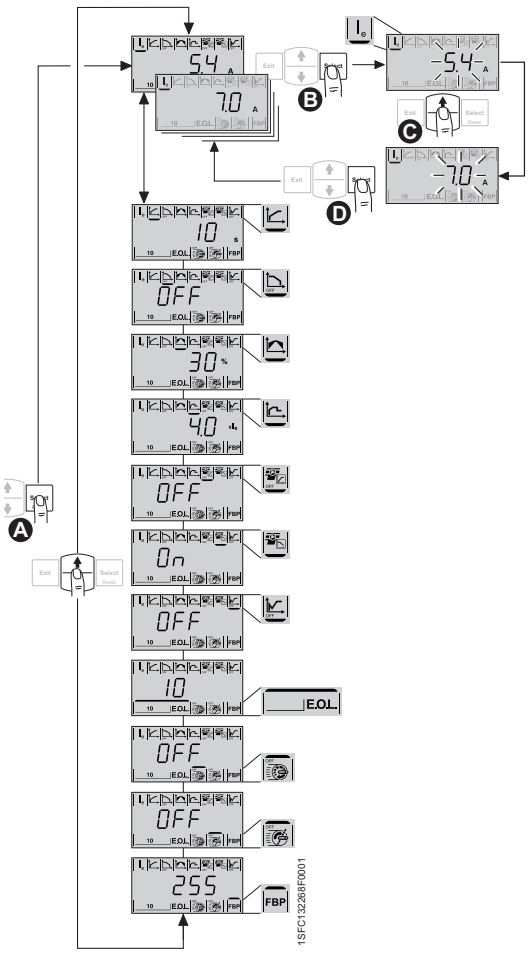

Figure 2.3:
Configuration of the parameter Rated Current.

A If disabled, press any key to activate the light in the display. Enter the application setting by pressing the Select key a second time.

B Press select again to enable editing of the I_e parameter. This is indicated by a flashing value.

C Increase or decrease the value by pressing the Up or Down keys repeatedly. Holding the key down will speed up the change. Press the Exit key to abort change.

D When the rated current of the motor is reached, press the Select key again to save.

If needed, continue to set other parameters according to the application following the same procedure.

Press the Exit key to return to the top level.

5. Connect control supply voltage to terminals 1 and 2 (100-250 V 50/60 Hz).

6. Connect the functional earth to terminal 14, with an earthing point close to the softstarter.

The earthing is not a protective earth, it is a functional earth. The earthing cable should be as short as possible. Maximum length 0.5 m. The earthing cable should be connected to the mounting plate, which should also be earthed.

7. Connect the start, stop and other control circuits including the analog out to the terminals, 8, 9, 10, 11, 12, 13 if needed. This section is using an internal 24 V DC. Do not feed with any external voltage.

Warning!

Do not connect an external voltage to the control terminals 8, 9, 10, 11, 12, 13 and 14. Failure to observe the above may damage the softstarter and the warranty may no longer be valid.

8. Connect terminals 3, 4, 5, 6 and 7 when using the signal output relays. These are potential free contacts for maximum 250 V AC, 1,5 A AC-15. Make sure you are using the same voltage level within this terminal section.

Warning!

The same external voltage (maximum 24 V DC or maximum 250 V AC) must be connected to the output relay terminals 3, 4, 5, 6 and 7. Failure to observe the above may damage the softstarter and the warranty may no longer be valid.

9. Switch ON the control supply voltage U_S, terminals 1 and 2.

10. Continue to configure parameter I_e as described in figure 2.3. Complete information about configuration is available in Chapter 6 Human-Machine Interface (HMI) and Chapter 7 Functions and configuration.

11. Switch ON the operational voltage U_e. The green “Ready” LED will turn solid.

12. Give start command to the softstarter.

Caution!

Depending on the two phase control, a connected motor terminal always carries live hazardous voltage. Do not touch terminals when voltage is applied. Output terminals will have live voltage even when the device is OFF. This can cause death or serious injury.

This page is intentionally left blank.

Chapter 3 Description

Overview 16
Markings and connections 17
Type designation 18
Documentation 18
Environmental influence 18
Specifications 18
Technical data 19
- General 19
- Weights 19
- PSE Softstarter types 20
- IEC information 21
- c UL us information 22
- Dimensions 23
- Drilling plan 25

Chapter 3 Description

This chapter describes the PSE Softstarter in general, specifications as well as available accessories and spare parts.

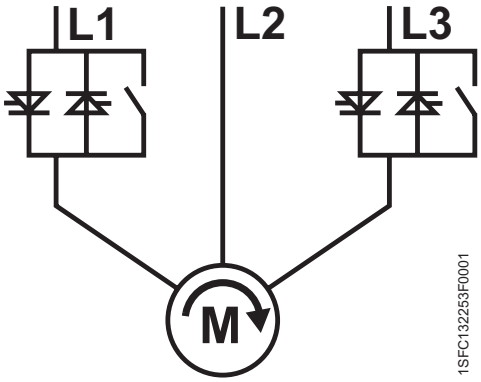

Figure 3.1: Integrated By-pass. Controlled phases 1 and 3 (L1 and L3).

3.1 Overview

The PSE Softstarter is a microprocessor-based softstarter designed with the latest technology for soft starting and soft stopping of three-phase squirrel cage motors. The softstarter has several advanced features as standard.

- Integrated by-pass in phases L1 and L3, see figure 3.1.
- Thyristors are used on phases L1 and L3 for controlling the motor voltage. Phase L2 is directly connected to the motor, see figure 3.1.
- Select between voltage ramp or torque control during start and stop.
- Motor protection, as well as underload and locked rotor protection.

The keypad on the front is designed to be as user-friendly as possible, with a clear display showing icons.

The PSE Softstarter can be controlled in two ways:
- Hardwire inputs control
- Fieldbus communication interface

Only one type of control method can be enabled simultaneously. Default selection is hardwire inputs control.

Figure 3.2: Torque control is offered as standard with the PSE softstarter.

The integrated fans for cooling are operated only during ramping (start/stop) and when the temperature of the heat sink is high. The temperature is monitored by a thermistor mounted on the heat sink.

Check that you have the correct product in regards to operational voltage, control supply voltage and rated motor data. See chapter 3.3 Type designation.

The PSE18...PSE370 Softstarters operates over wide voltage ranges.
- Rated operational voltage 208 - 600 V AC
- Rated control supply voltage 100 - 250 V AC

Warning!
The product should only be used within the specified ratings.
Be aware of the ambient temperature and altitude above sea level. Derating is required above 40 °C (104 °F) and above 1000 m (3281 ft).

3.2 Markings and connections

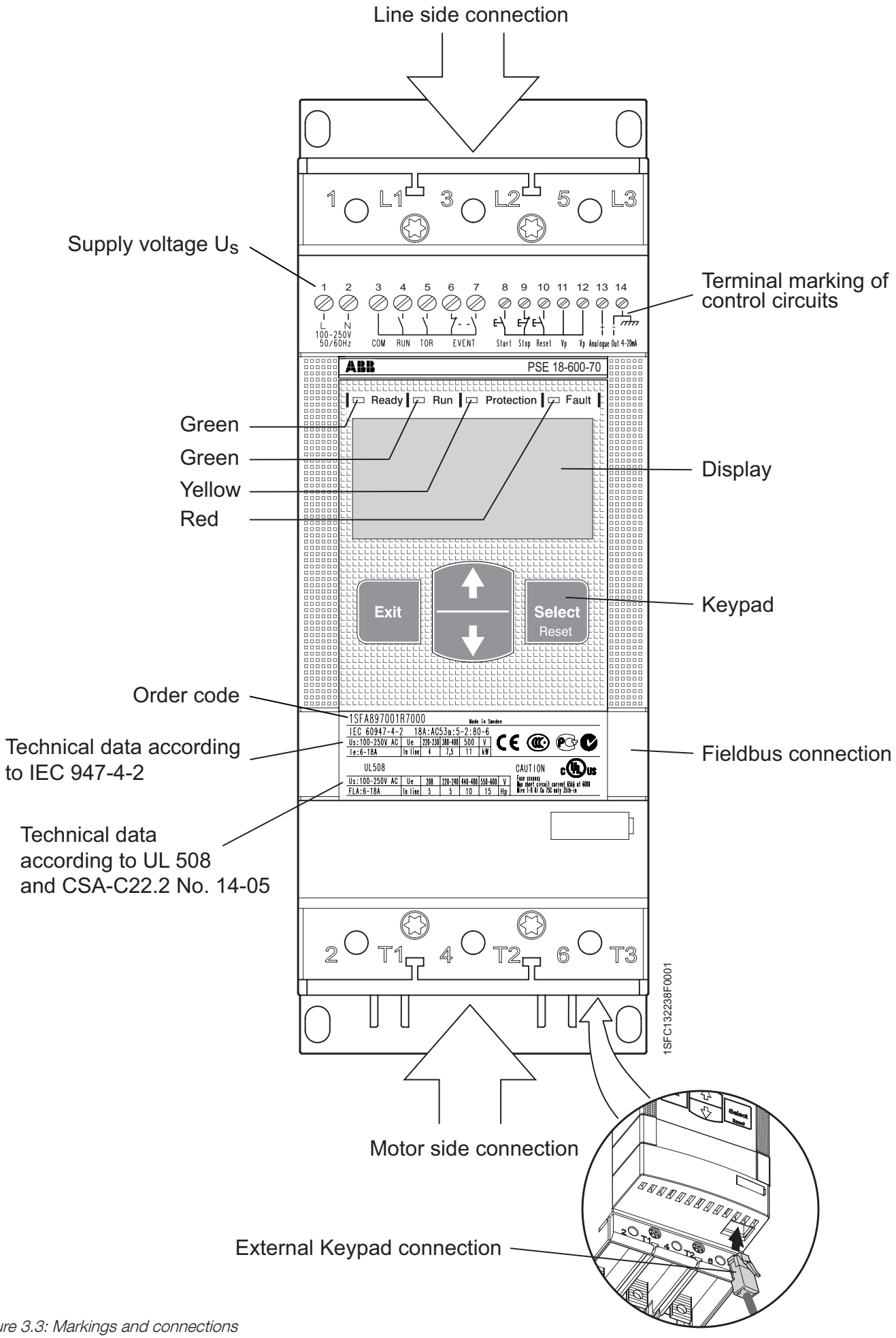

Figure 3.3: Markings and connections

3.3 Type designation

Type designation to be found on the softstarters front. See figure 3.4.

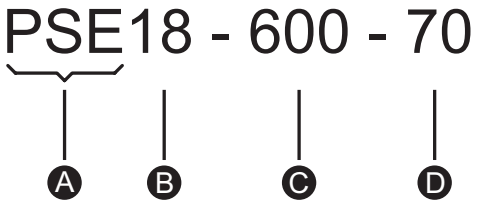

Figure 3.4: Type designation

- **A** Softstarter type: PSE
- **B** Current rating: 18 = 18 A
- **C** Operational voltage: 600 = 208 - 600 V 50/60 Hz
- **D** Control supply voltage: 70 = 100 - 250 V 50/60 Hz

3.4 Documentation

Documentation such as brochures, catalogs, certificates, and drawings included can be found at: *www.abb.com/lowvoltage.* Select the link Control Products and then continue to Softstarters.

3.5 Environmental influence

The product is designed to minimize the environmental effects during manufacturing and use of the product. Most of the materials used, are of recycle type, and shall be handled and recycled according to existing laws.

Further information regarding used material and recycling of the product can be found at: *www.abb.com/lowvoltage*

3.6 Specifications

Table 3.1

Degree of protection (Operational circuit)	IP 00
Operating position	Vertical at ± 30°
Ambient temperature	Storage. -40 °C to + 70 °C (-40 °F to 158 °F) Operation: -25 °C to + 40 °C (-13 °F to 104 °F) without derating. + 40 °C to + 60 °C (104 °F to 140 °F) with derating 0.6 % /1 °C (0.6% / 1,8 °F).
Altitude	1000 m (3281 ft.) above sea level without derating. 1000-4000 m (3281 - 13123 ft.) above sea level with derating 0.007% / m.
Pollution degree	3
Relative humidity	5-95% (non-condensing)
Standards	IEC 60947-1 IEC 60947-4-2 EN 60947-1 EN 60947-4-2
Standards c UL us	UL 508, CSA C22.2 No 14-10

3.7 Technical data

3.7.1 General

Table 3.2

General data	
Rated insulation voltage, U_i	600 V
Rated operational voltage, U_e	208-600 V 50 / 60 Hz
Rated control supply voltage, U_s	100 - 250 V 50 / 60 Hz
Voltage tolerance	+10% to -15%
Frequency tolerance	± 5%
Rated impulse withstand voltage	6 kV operational circuit / 4 kV control supply circuit
Number of controlled phases	2
Inputs	Start, stop, reset
Analog out	4-20 mA
Cooling system	Fan
Rated duty	Uninterrupted
EMC	IEC 60947-4-2 Class A ❶ Lloyds Register (2002)
Recommended fuse Supply circuit	6A Delayed MCB use characteristics
Communication protocols	DeviceNet/Profibus/Modbus/CANopen

❶ This product has been designed for class A equipment. Use of the product in domestic environments may cause radio interference, in which case the user may be required to employ additional mitigation methods.

3.7.2 Weights

Table 3.3

Type	Weight in kg	Weight in lbs
PSE18...60	2.4	5.3
PSE72...105	2.5	5.5
PSE142...170	4.2	9.2
PSE210	12.4	27.3
PSE250...370	13.9	30.6

3.7.3 PSE Softstarter types

Table 3.4

Type	PSE 18	PSE 25	PSE 30	PSE 37
Rated Current I_e (A)	18	25	30	37
Motor size 380 - 415 V (kW)	7.5	11	15	18.5
Motor size 480 V (hp)	10	15	20	25
Motor size 600 V (hp)	15	20	25	30
Power loss at Rated Current (W)	0.2	0.4	0.5	0.8
Power supply requirements holding (VA)	16	16	16	16
Power supply requirements pull-in value (VA)	19,9	19,9	19,9	19,9

Table 3.5

Type	PSE 45	PSE 60	PSE 72	PSE 85
Rated Current I_e (A)	45	60	72	85
Motor size 380 - 415 V (kW)	22	30	37	45
Motor size 480 V (hp)	30	40	50	60
Motor size 600 V (hp)	40	50	60	75
Power loss at Rated Current (W)	1.2	2.2	3.1	4.3
Power supply requirements holding (VA)	16	16	16	16
Power supply requirements pull-in value (VA)	19,9	19,9	19,9	19,9

Table 3.6

Type	PSE 105	PSE 142	PSE 170	PSE 210
Rated Current I_e (A)	106	143	171	210
Motor size 380 - 415 V (kW)	55	75	90	110
Motor size 480 V (hp)	75	100	125	150
Motor size 600 V (hp)	100	125	150	200
Power loss at Rated Current (W)	6.6	12.1	17.6	8.8
Power supply requirements holding (VA)	16	16	16	23
Power supply requirements pull-in value (VA)	19,9	31	31	350

Table 3.7

Type	PSE 250	PSE 300	PSE 370
Rated Current I_e (A)	250	302	370
Motor size 380 - 415 V (kW)	132	160	200
Motor size 480 V (hp)	200	250	300
Motor size 600 V (hp)	250	300	350
Power loss at Rated Current (W)	12.5	18	27.4
Power supply requirements holding (VA)	23	23	23
Power supply requirements pull-in value (VA)	350	350	350

3.7.4 IEC information

Equipment suitable for use in a circuit with maximum available fault current as shown when protected by devices indicated in table 3.8. Examples of semiconductor fuses and MCCB according to IEC. For more information about fuses see: http://www.abbcontrol.fr/coordination_tables/coordtable.htm

Table 3.8

	IEC			
	Type 2 co-ordination Fuses		Type 1 co-ordination MCCB	
	600V Iq 85kA Semicond. Bussmann DIN 43620		400V Iq 35kA	400V Iq 50kA
Softstarter Type	Type	Rating	Type	Type
PSE18-600-70	170M1563	40A	T2N160 MA20	T2S160 MA20
PSE25-600-70	170M1564	50A	T2N160 MA32	T2S160 MA32
PSE30-600-70	170M1566	80A	T2N160 MA52	T2S160 MA52
PSE37-600-70	170M1567	100A	T2N160 MA52	T2S160 MA52
PSE45-600-70	170M1568	125A	T2N160 MA52	T2S160 MA52
PSE60-600-70	170M1569	160A	T2N160 MA80	T2S160 MA80
PSE72-600-70	170M1571	250A	T2N160 MA80	T2S160 MA80
PSE85-600-70	170M1572	315A	T2N160 MA100	T2S160 MA100
PSE105-600-70	170M3819	400A	T3N250 MA160	T3S250 MA160
PSE142-600-70	170M5809	450A	T3N250 MA200	T3S250 MA200
PSE170-600-70	170M5810	500A	T3N250 MA200	T3S250 MA200
PSE210-600-70	170M5812	630A	T4N320 PR221-I In320	T4S320 PR221-I In320
PSE250-600-70	170M5813	700A	T5N400 PR221-I In400	T5S400 PR221-I In400
PSE300-600-70	170M6812	800A	T5N400 PR221-I In400	T5S400 PR221-I In400
PSE370-600-70	170M6813	900A	T5N630 PR221-I In630	T5S630 PR221-I In630

3.7.5 c UL us information

Examples of equipment suitable for use in a circuit with maximum available fault current as shown when protected by devices indicated. See table 3.9. For more information see: http://www.abbcontrol.fr/coordination_tables/coordtable.htm

Table 3.9

	c UL us						
	Fuses	MCCB					
		Normal breaker			Standard breaker		
	550-600V High Fault Current 85kA	440-480V	550-600V		440-480V	550-600V	
Softstarter Type	Class J Fuses	High Fault Current	High Fault Current	Normal breaker	High Fault Current	High Fault Current	Standard breaker
PSE18-600-70	40A	25kA	14kA	Ts3N070TW	35kA	25kA	Ts3L070TW
PSE25-600-70	50A			Ts3N100TW			Ts3L100TW
PSE30-600-70	60A			Ts3N100TW			Ts3L100TW
PSE37-600-70	80A			Ts3N125TW			Ts3L125TW
PSE45-600-70	100A			Ts3N150TW			Ts3L150TW
PSE60-600-70	125A			Ts3N150TW			Ts3L150TW
PSE72-600-70	150A		18kA	T4N250TW			T4S250TW
PSE85-600-70	175A			T5N300TW			T5S300TW
PSE105-600-70	225A			T5N300TW			T5S300BW
PSE142-600-70	300A			T5N400BW			T5S400BW
PSE170-600-70	350A			T5N400BW			T5S400BW
PSE210-600-70	450A	35kA	20kA	T6N600BW	50kA		T6S600BW
PSE250-600-70	500A			T6N600BW			T6S800BW
PSE300-600-70	600A			T6N800BW			T6S800BW
PSE370-600-70	600A			T6N800BW			T6S800BW

3.7.6 Dimensions

Dimensions PSE 18...105

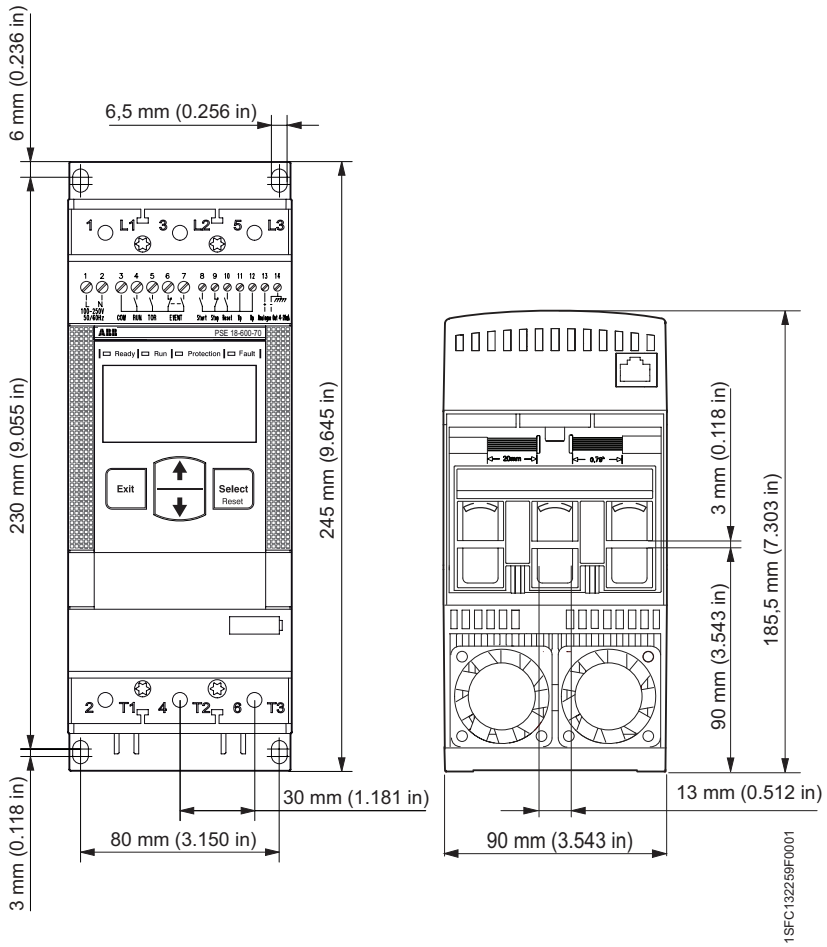

Dimensions PSE 142...170

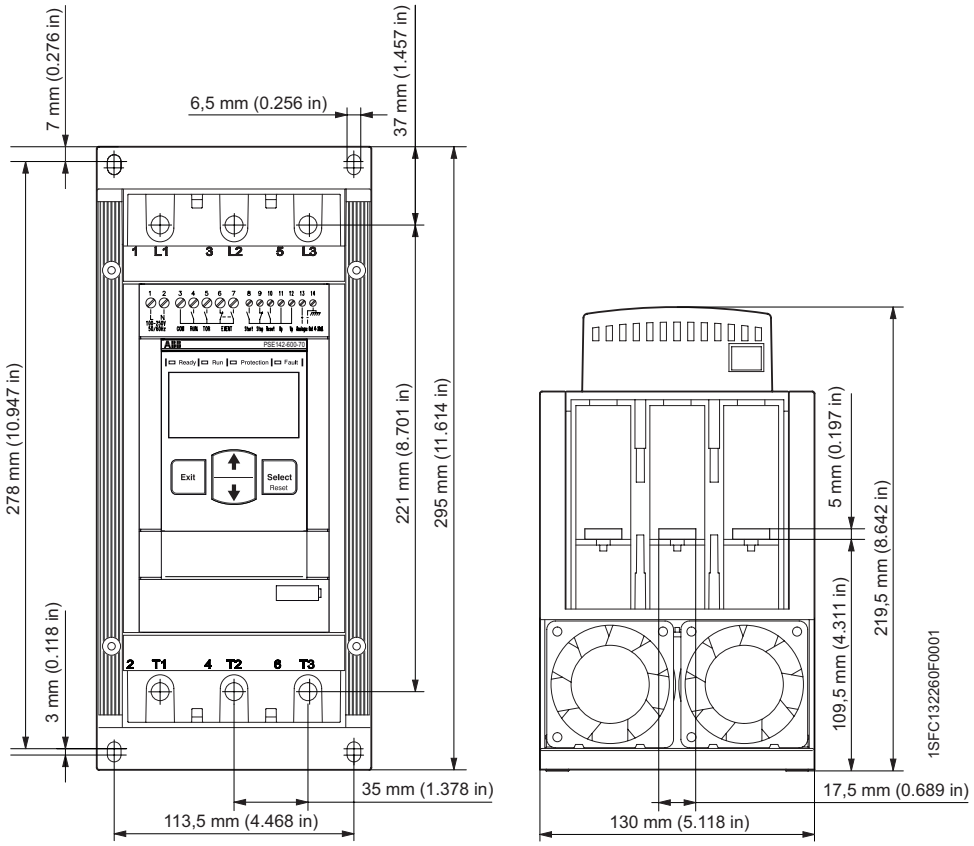

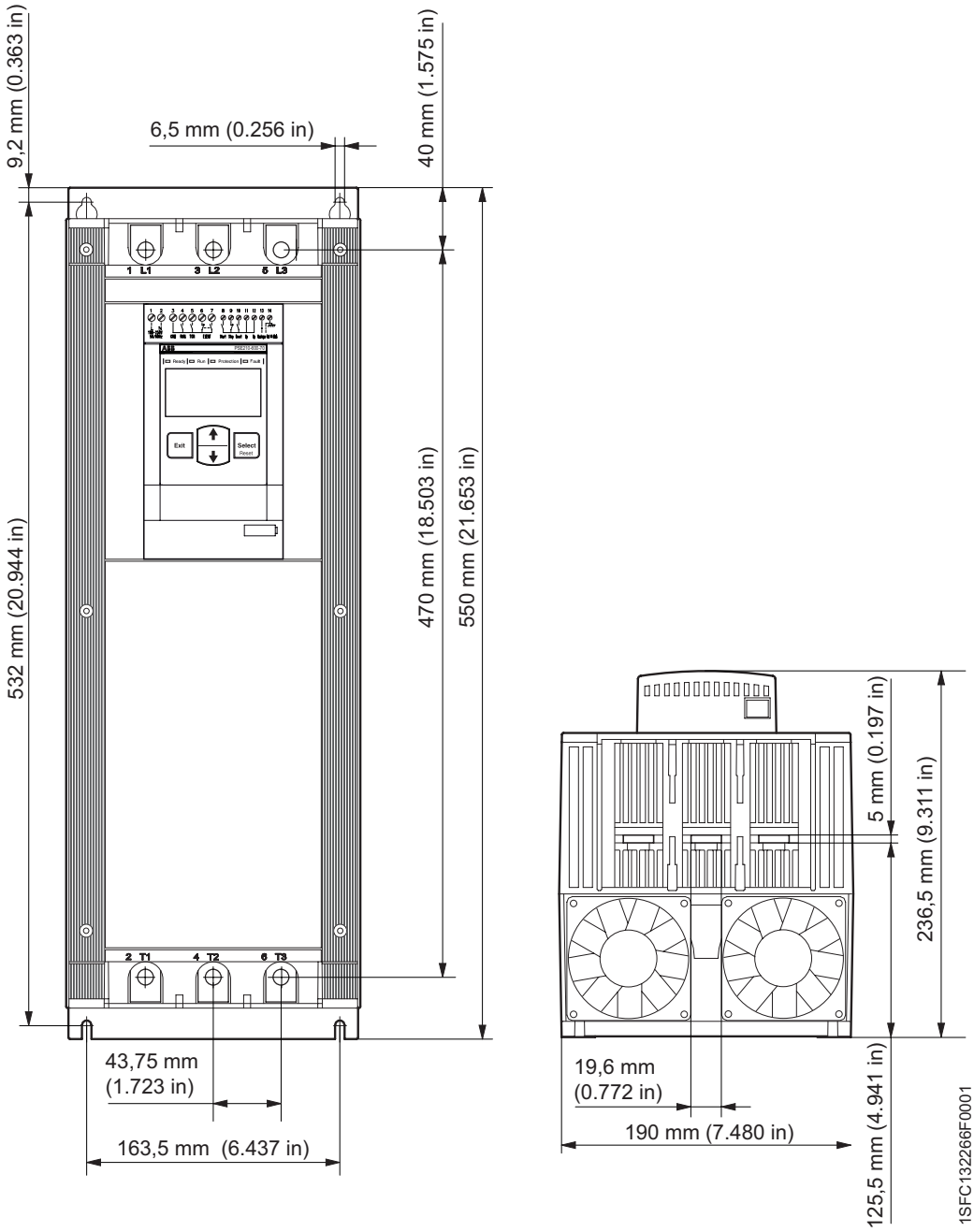
9,2 mm (0.363 in)
6,5 mm (0.256 in)
40 mm (1.575 in)
1 L1
3 L2
5 L3
532 mm (20.944 in)
470 mm (18.503 in)
550 mm (21.653 in)
2 T1
4 T2
6 T3
43,75 mm
(1.723 in)
163,5 mm (6.437 in)
5 mm (0.197 in)
236,5 mm (9.311 in)
19,6 mm
(0.772 in)
190 mm (7.480 in)
125,5 mm (4.941 in)
1SFC132266F0001

3.7.7 Drilling plan

Drilling plan PSE 18...105

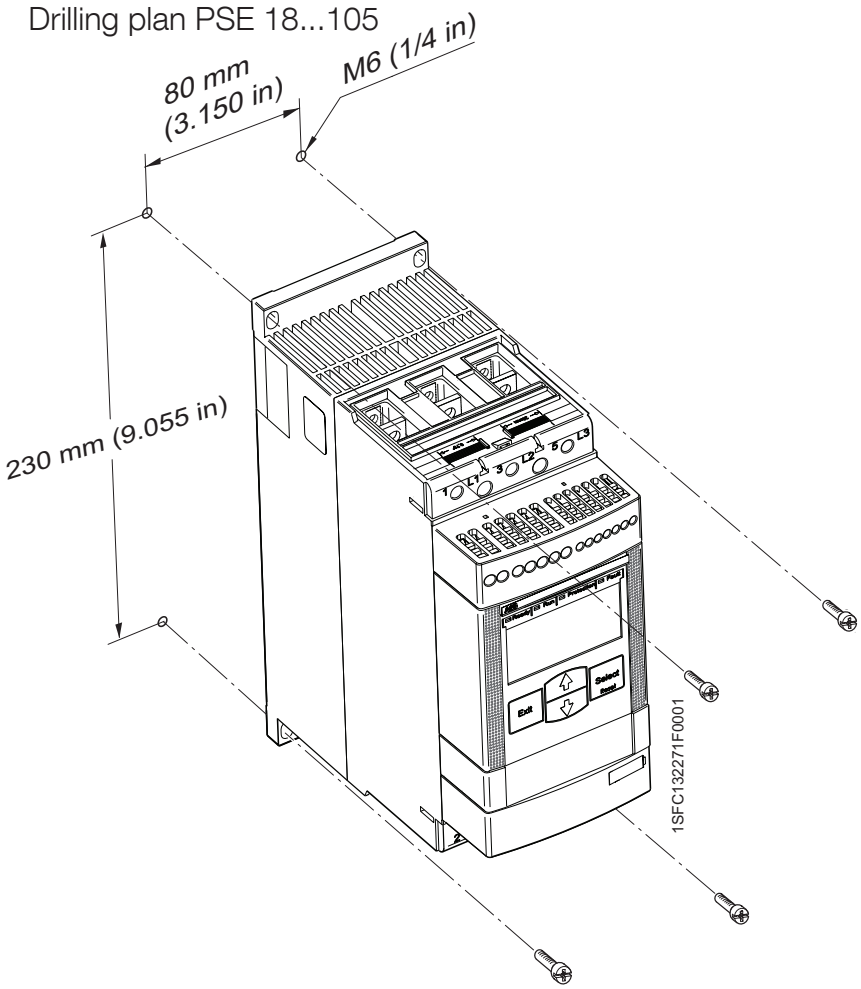

Drilling plan PSE142...170

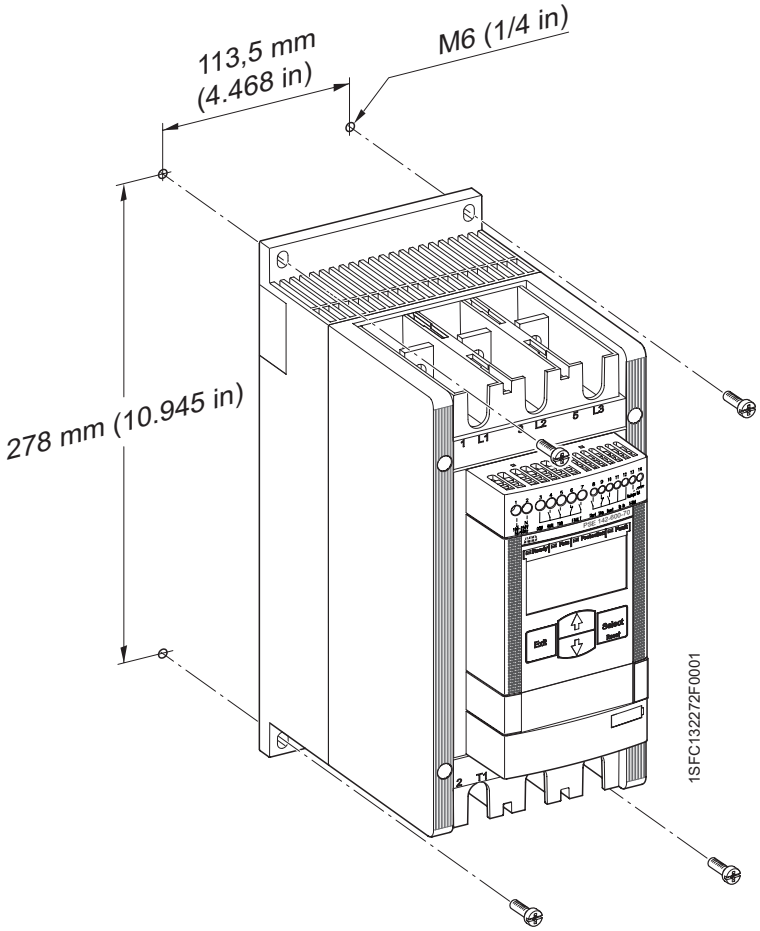

Drilling plan PSE210...370

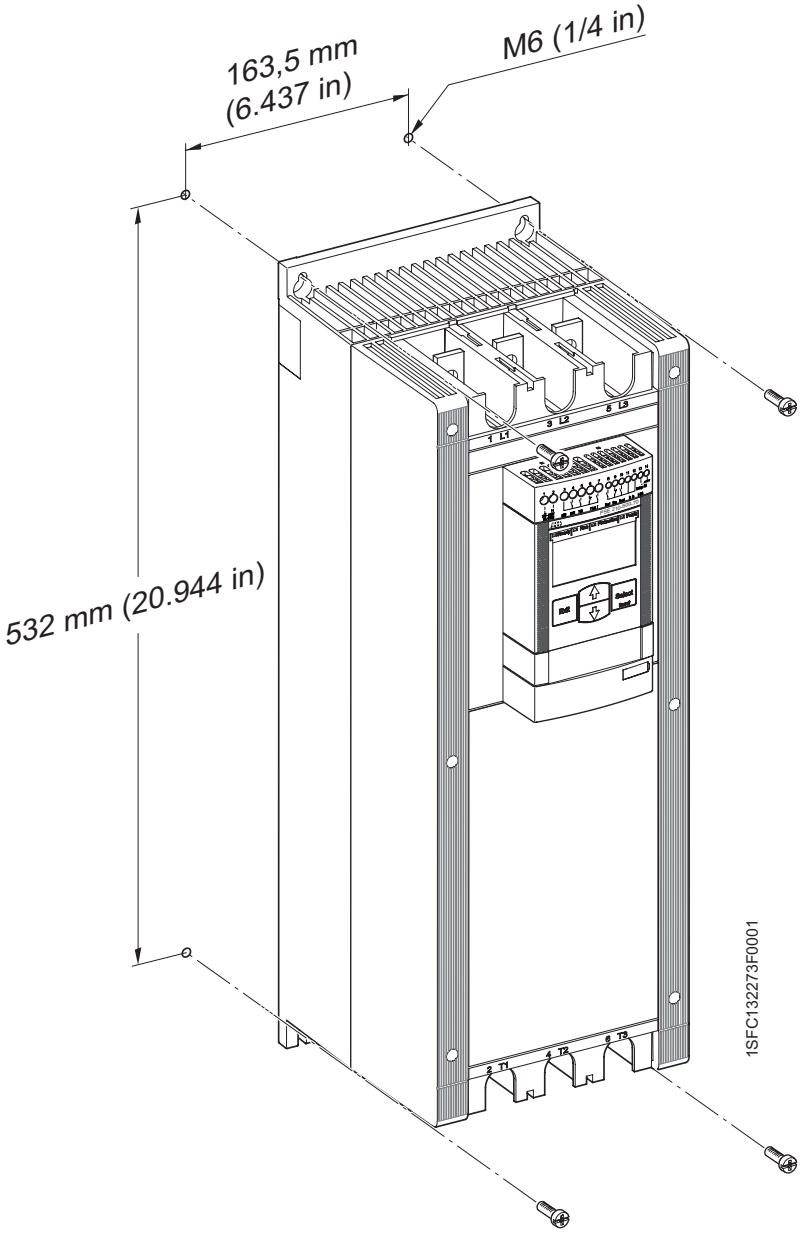

Chapter 4 Mounting

Receiving, unpacking and checking 28
Intermediate storage 28
Mounting 28
Handling when mounting 28
Requirements 29
Minimum enclosure size 29
Minimum distance to wall and front 30

Chapter 4 Mounting

This chapter describes instructions on how to receive the softstarter and how to mount it in a proper way.

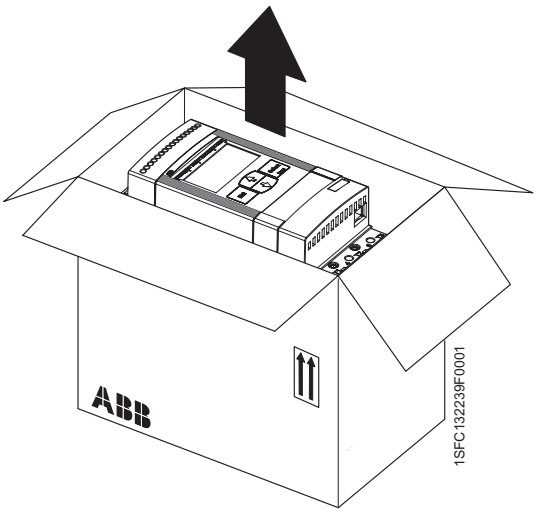

Figure 4.1: Unpacking PSE18...PSE170

4.1 Receiving, unpacking and checking

- Check that the package is turned with the correct side up, figures 4.1 and 4.2.
- Check for transport damages.
- Remove the transport casing.
- Visually inspect the softstarter.
- Check that the order code corresponds with the delivery documents.
- Check that all items are included, according to the delivery note.
- Check the softstarter as well as the package. If you find any damages, please contact the transport company or the supplier immediately.

4.1.1 Intermediate storage

Until the softstarter is mounted it should be stored in its package.

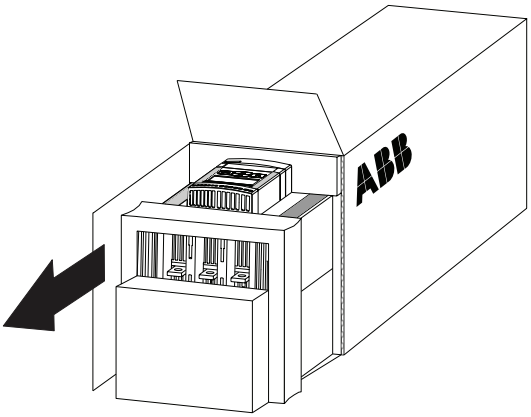

Figure 4.2: Unpacking PSE210...PSE370

4.2 Mounting

4.2.1 Handling when mounting

The softstarter is available in three physical sizes. All models of PSE can be taken out of the packages and be mounted without lifting equipment. See chapter 3.7.2 for weights.

Warning!

Never lift the softstarter by the connection bars, since it may cause damage to the product.

4.2.2 Requirements

See Chapter 3 Description for environmental requirements.

The PSE Softstarters exist in three different physical sizes which are designed to be mounted with M6 (1/4 in.) bolts as well as bolts of equivalent dimension and strength. Measures and drilling plans will be found in chapters 3.7.6 Dimensions and 3.7.7 Drilling plan.

4.2.3 Minimum enclosure size

In applications where the softstarter is installed in an enclosure, the following minimum enclosure sizes are recommended. Dimensions according to the sketch in figure 4.3.

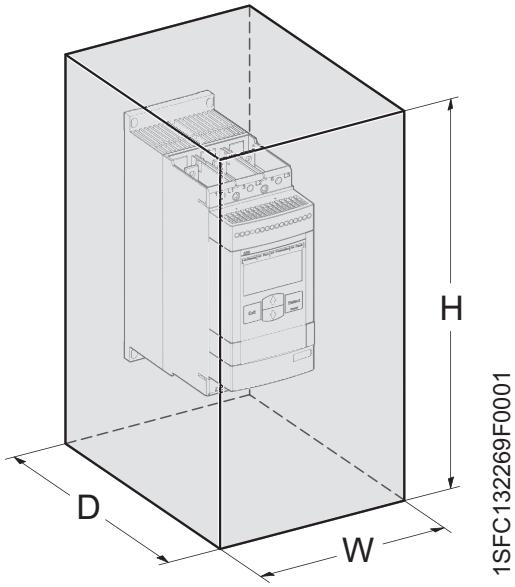

Figure 4.3: Dimensions minimum enclosure size

Table 4.1

IEC	W (mm)	H (mm)	D (mm)
PSE18...105	400	500	260
PSE142...170	400	600	260
PSE210...370	600	1000	300

Table 4.2

c UL us	W (in)	H (in)	D (in)	min number of latches
PSE18...105	20	24	12	1
PSE142...170	30	36	12	2
PSE210...370	36	48	16	1

Dimensions and drilling plan see Chapter 3 Description.

Warning!

Using a too small enclosure and/or failure to follow the instructions in other ways may result in overheating of the PSE Softstarter and operational disturbances.

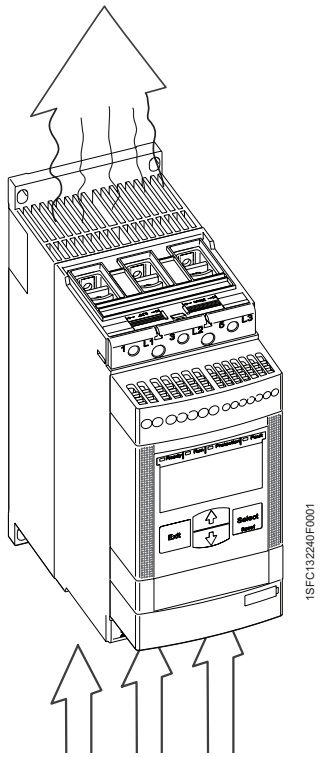

Figure 4.4: Airways

4.2.4 Minimum distance to wall and front

Check that a sufficient flow of air for cooling purposes can circulate from the bottom to the top of the softstarter, and has a free passage away. Figure 4.3.

Warning!

Risk of damage to property. Ensure that no liquids, dust or conductive parts enter the softstarter.

Make sure that the distances to the surrounding walls are sufficient, and that the mounting angle is within specifications shown in figure 4.5.
Follow the minimum distance to front and wall, as described in figure 4.4 and the table below.

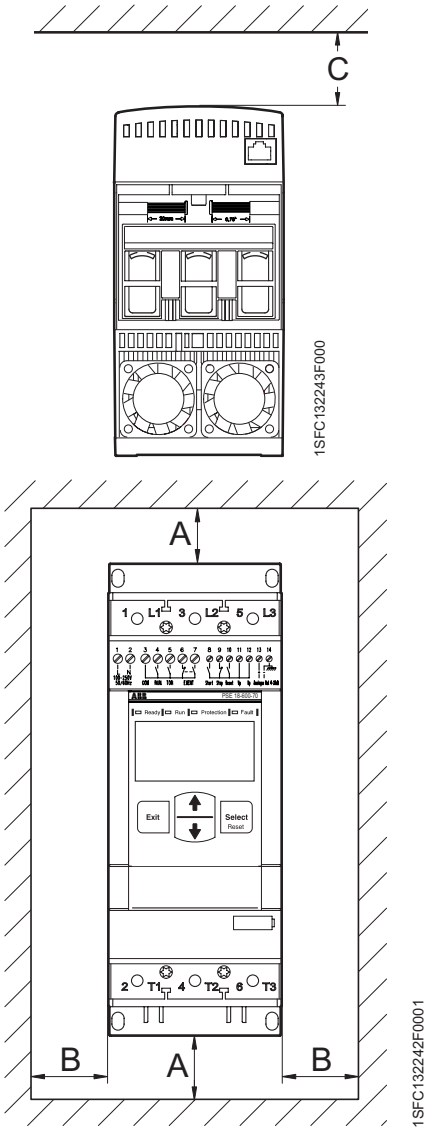

Figure 4.5: Minimum distances to wall and front

Table 4.3

The values in table 4.3 are minimum distances.

	A (mm [inch])	B (mm [inch])	C (mm [inch])
PSE18...105	100 [3.94]	10 [0.394]	20 [0.788]
PSE142...170	100 [3.94]	10 [0.394]	20 [0.788]
PSE210...370	100 [3.94]	10 [0.394]	20 [0.788]

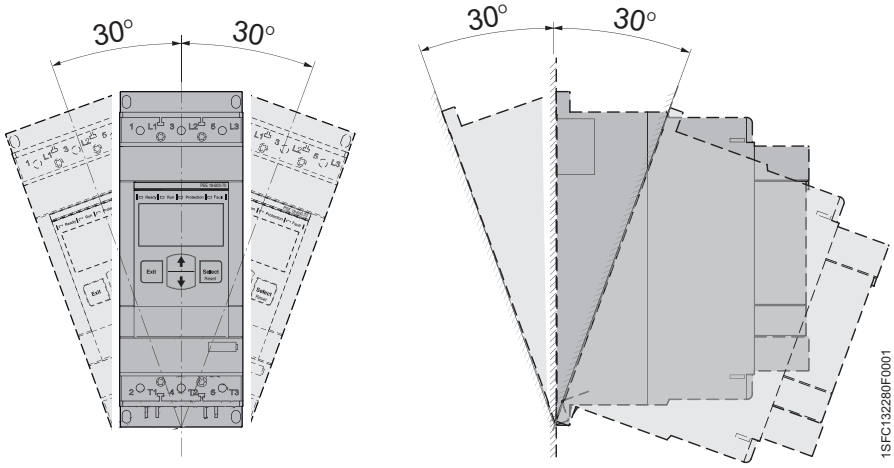

Figure 4.6: Maximum mounting angle

Chapter 5 Connection

General 32
Electrical connection 32
Considerations when controlling two of three phases 32
Before connecting softstarters PSE18...PSE170 33
Connection of the operational power circuit 34
Control supply and control circuit 35
Control supply voltage, terminals 1 and 2 35
Functional earth, terminal 14 36
Start and Stop, terminals 8 and 9 in circuit with terminals 11 or 12. .. 37
Reset event, terminal 10 38
Analog output, terminals 13 and 14 39
Status output relays, terminals 3, 4, 5, 6, and 7 40
Connection of communication devices (optional) 41
External keypad 41
Technical data for External Keypad 41
Transfer of parameters 42
Transfer of parameters from softstarter to external keypad 42
Transfer of parameters from external keypad to softstarter 42
Fieldbus communication 43

Chapter 5 Connection

This chapter describes the electrical connections as well as connections for communication devices that have to be made before you can use the softstarter.

5.1 General

Caution!
Mounting and electrical connection of the softstarter shall be made in accordance with existing laws and regulations and be performed by authorized personnel.

Warning!
Hazardous voltage. Will cause death or serious injury. Turn off and lock out all power supplying this device before starting work on this equipment.

For basic connection, see Chapter 2 Quickstart.

For circuit diagrams for connection of the softstarter, see Chapter 11 Wiring diagrams.

5.2 Electrical connection

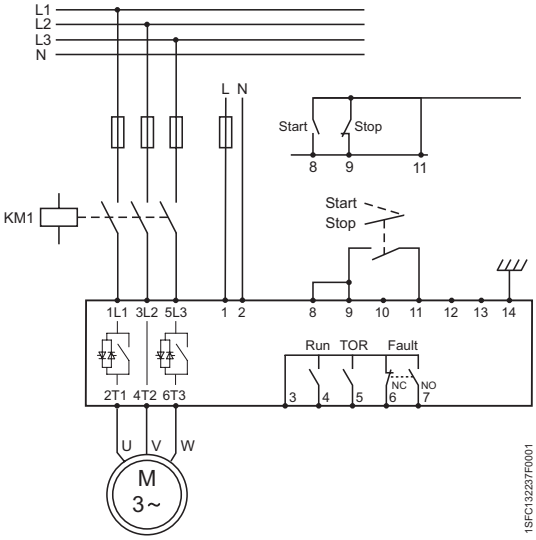

Figure 5.1: Connection of PSE Softstarter and connection in series with a line contactor.

5.2.1 Considerations when controlling two of three phases

Even when stopped, there will be a voltage on the motor on phase 2. This will not start the motor and the motor will not be heated up (compare with inside delta connection). For more information about two phase control see Chapter 3 Description.

Semiconductors do not replace air isolation and the recommended solution is to use a line contactor to break the current. See figure 5.1.

Caution!
Depending on the two phase control a connected motor terminal always carries live voltage. Touching terminals and other live parts can result in death or serious injury.

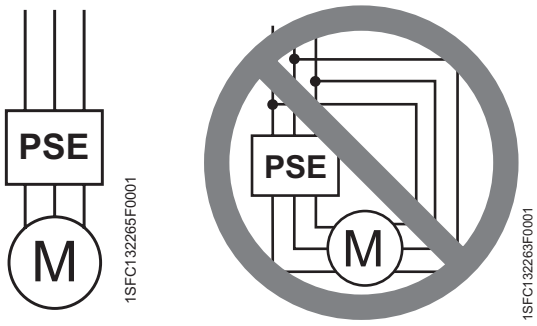

Figure 5.2: ABB PSE Softstarter must be connected In Line only.

Since Softstarters PSE18 … PSE370 has control in two phases, the connection must be done In Line only, in accordance with the circuit diagrams in figure 5.2 and in Chapter 11.

Caution!

Softstarters PSE18...PSE370 must not be connected Inside Delta since this will cause damage to the equipment and there is a risk of death or serious injury. Figure 5.2.

5.2.2 Before connecting softstarters PSE18...PSE170

Warning!

Before connecting the Softstarters PSE size 18...PSE170 to operational supply voltage for the first time, the control supply voltage must be turned on to ensure that the by-pass relays are in the open position. This is necessary to avoid unintentional starting of the equipment during the connection.

5.2.3 Connection of the operational power circuit

The softstarter is recommended to be connected with a line contactor as described in figure 5.1. Additional circuit diagrams will be found in Chapter 11 Wiring diagrams.

Softstarters PSE18...PSE105 are provided with built-in cable clamps. The cables must be stripped before connection, and the length of the exposed wire should be 20 mm or 0.8 in. Connect according to figures 5.3 and 5.5.

For Softstarters PSE142...PSE370 the cables must have lugs and be connected to the terminal bars, according to figure 5.4 and 5.5.

Connect the line side to terminals 1L1, 3L2, 5L3.

Connect the motor to terminals 2T1, 4T2, 6T3.

The terminals marking are printed on the front of the softstarter.

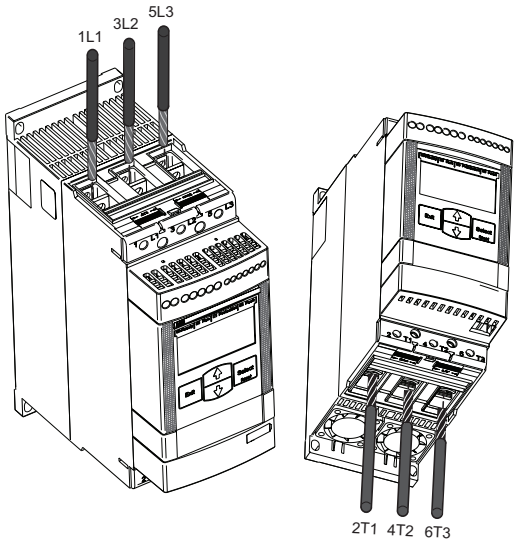

Figure 5.3: PSE18...PSE105 connection of the connection module line side and motor side terminals

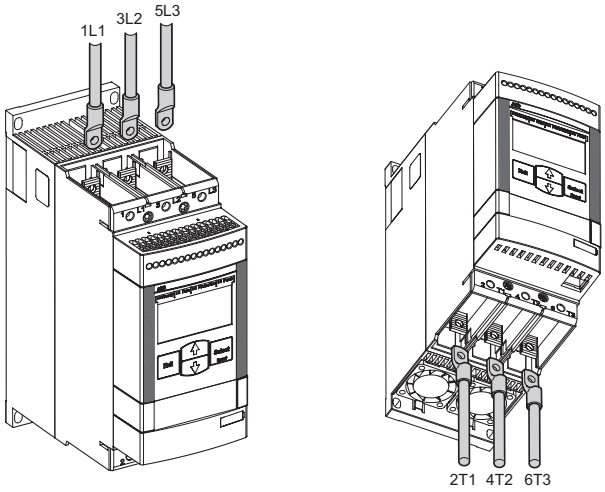

Figure 5.4: PSE142...PSE370 connection of the line side and motor side terminals

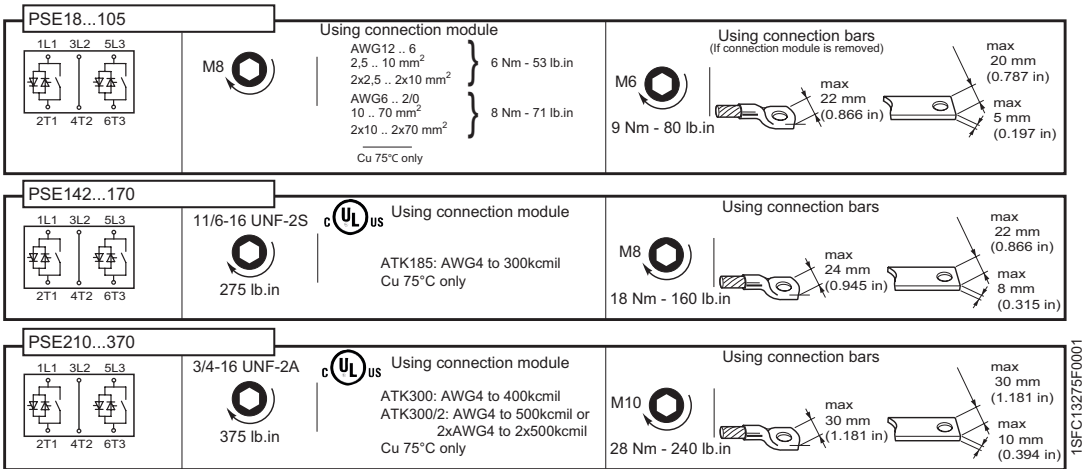

Figure 5.5: Tightening torques and dimensions for terminal bars and lugs

Warning!

Capacitors for power factor compensation are not allowed between the softstarter and the motor, since this can cause current peaks which can burn the thyristors in the softstarter. If such capacitors are to be used, they should be connected on the line side of the softstarter.

5.2.4 Control supply and control circuit

Wires in industrial control applications are divided into three groups: main power supply, control supply and control.

5.2.4.1 Control supply voltage, terminals 1 and 2

Connect neutral and live to terminal 1 and 2, as shown in figures 5.6 and 5.7.

Check that you have the correct control supply voltage U_S.

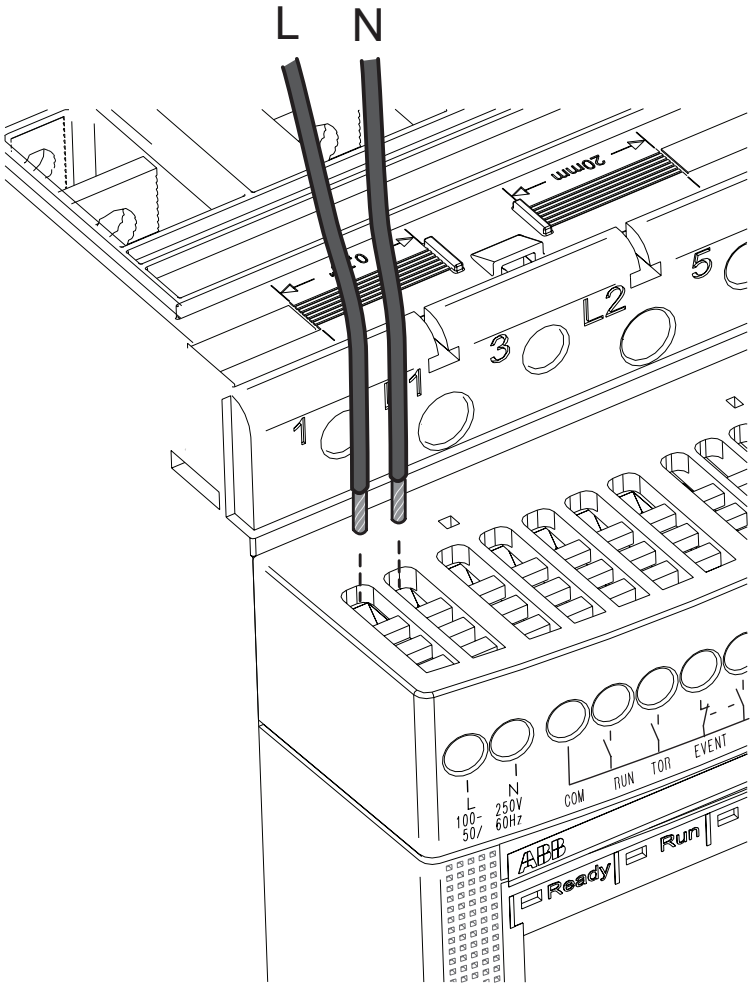

Figure 5.6: Terminals for control supply voltage

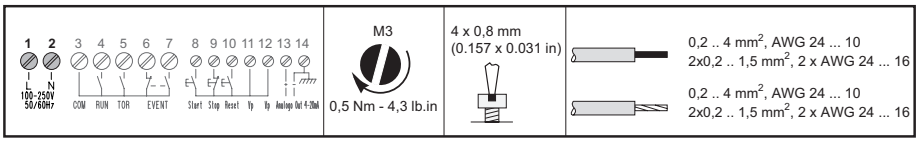

Figure 5.7: Tightening torques and wire area

5.2.4.2 Functional earth, terminal 14

Connect the cable to an earthing point close to the softstarter. The cable should be as short as possible. A suitable earthing point would be next to the softstarter on the mounting plate, as shown in figures 5.8 and 5.9. The mounting plate should also be earthed.

This is not a protective earth, it is a functional earth. The earthing cable should be as short as possible. Maximum length 0.5 m.

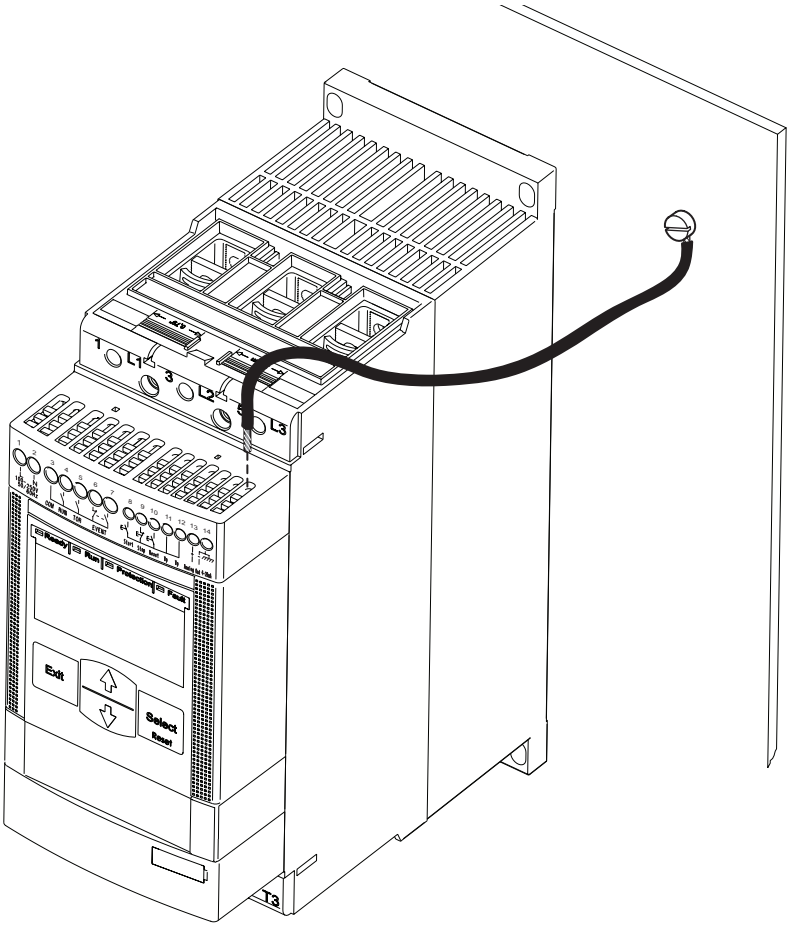

Figure 5.8: Terminal for functional earth

1 2 3 4 5 6 7 8 9 10 11 12 13 **14** L N 100-250V 50/60Hz COM RUN TOR EVENT Start Stop Reset Up Up Analog Out 4-20mA	M3 0,5 Nm - 4,3 lb.in	3,5 x 0,6 mm (0.138 x 0.24 in)	AWG 24 ... 12 0,2 .. 2,5 mm^2 2x0,2 .. 1,5 mm^2 0,2 .. 2,5 mm^2 2x0,2 .. 1,5 mm^2

Figure 5.9: Tightening torques and wire area

5.2.4.3 Start and Stop, terminals 8 and 9 in circuit with terminals 11 or 12.

The PSE Softstarter has a built-in holding circuit and does not require sustained signals on start input. Use internal control supply voltage from terminals 11 or 12.

Connection of start and stop terminals using conventional circuit with push buttons, see figures 5.10 and 5.12.

A conventional circuit with auxiliary relay is also possible, see figure 5.11 and 5.12.

Warning!

Do not connect an external voltage to any of the control terminals 8, 9, 10, 11, 12 and 13. Failure to observe the above may damage the softstarter and the warranty may no longer be valid.

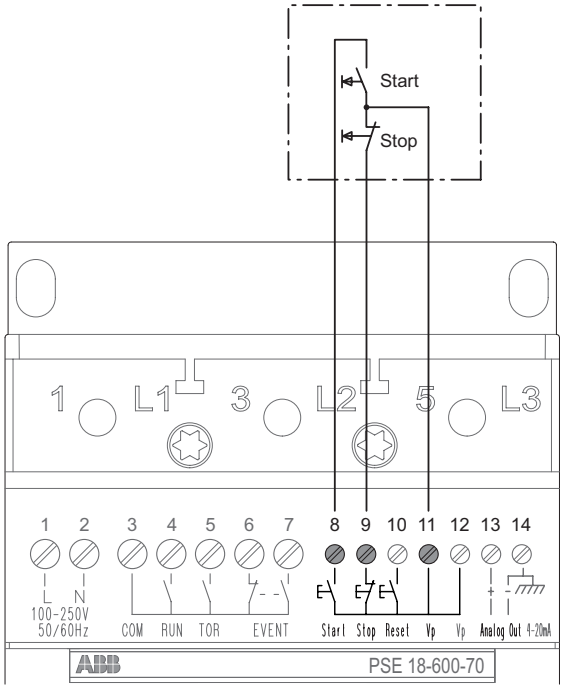

Figure 5.10: Terminals for start and stop, conventional circuit with push button

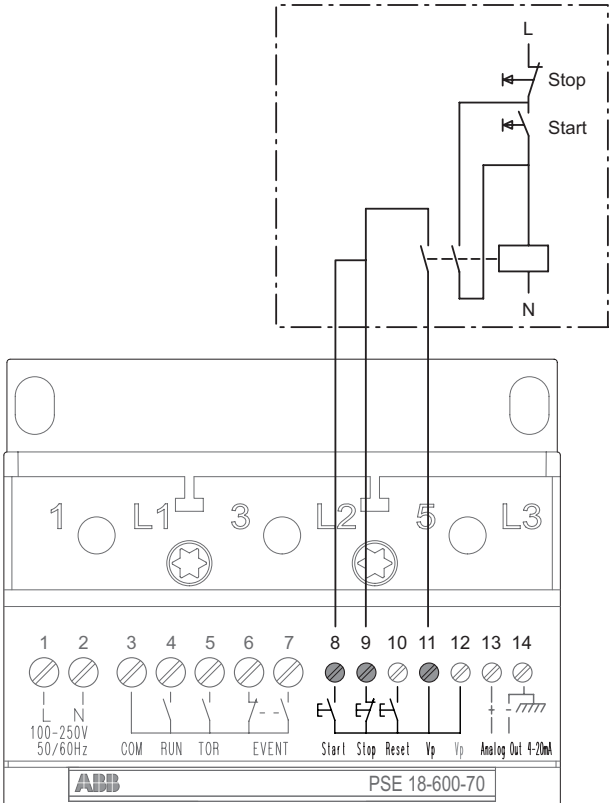

Figure 5.11: Terminals for start and stop, conventional circuit with auxiliary relay

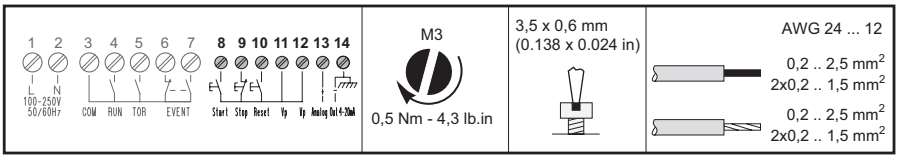

Figure 5.12: Tightening torques and wire area

5.2.4.4 Reset event, terminal 10

The reset control terminal 10 is in circuit with terminals 11 or 12 used for remote reset of trip events. See figures 5.13 and 5.14.

Warning!

Do not connect an external voltage to any of the control terminals 8, 9, 10, 11, 12 and 13. Failure to observe the above may damage the softstarter and the warranty may no longer be valid.

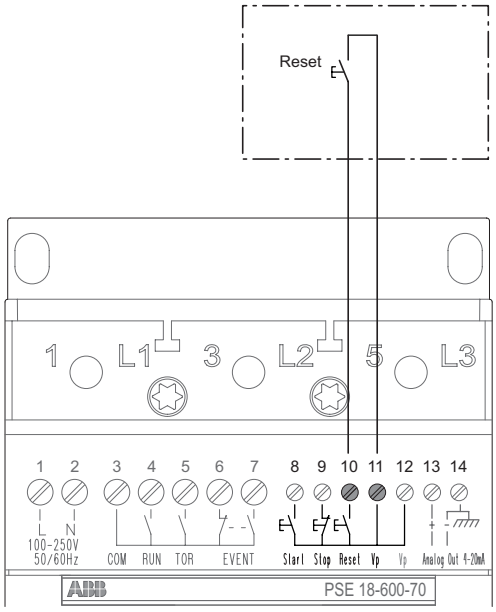

Figure 5.13: Terminal for reset event

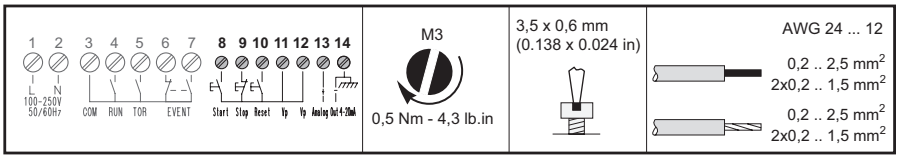

Figure 5.14: Tightening torques and wire area

5.2.4.5 Analog output, terminals 13 and 14

Analog output can be used for the connection of analog instruments.

If the analog output is used, the cables shall be connected to terminals 13 (+) and 14 (-). See figures 5.15 and 5.16.

Analog out signal can vary in the range 4 - 20 mA, corresponding to 0 - 120 percent of set value for parameter I_e. 100 percent corresponds to 17.3 mA.

Warning!

Do not connect an external voltage to any of the control terminals 8, 9, 10, 11, 12 and 13. Failure to observe the above may damage the softstarter and the warranty may no longer be valid.

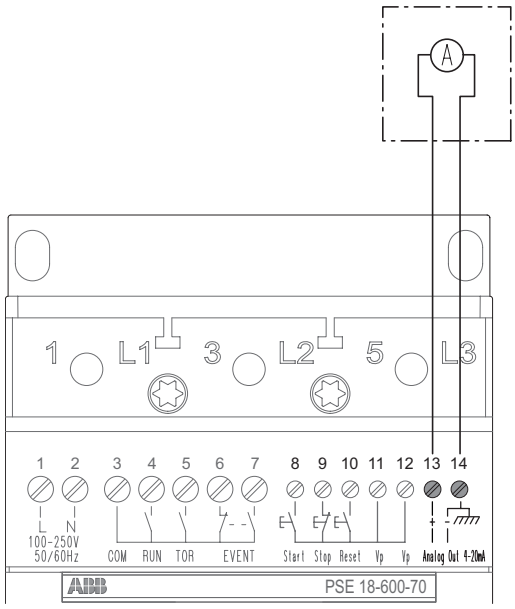

Figure 5.15: Terminals for analog output

Figure 5.16: Tightening torques and wire area

5.2.4.6 Status output relays, terminals 3, 4, 5, 6, and 7

By connection to terminals 3, 4, 5, 6, and 7, RUN, TOR and EVENT are available for a contactor, a PLC or a status indicator, which can use these signals as an input.

The COM connection on terminal 3 is a shared neutral connection for terminals 4, 5, 6, and 7.

Run signal is given from terminal 4 during start ramp, running, and stop ramp if used. It can be used to control the line contactor.

Top of Ramp (TOR) signal is given from terminal 5 when full voltage to the motor is applied.

The event relay is available as normal closed outlet on terminal 6 and normal open outlet on terminal 7. It is indicating a present fault or protection. The event signal can be used as input for a status indicating lamp or a LED.

For connection see figures 5.17 and 5.18.

Warning!

The same external voltage (24 V DC or 110-250 V AC) must be connected to the output relay terminals 3, 4, 5, 6 and 7. Failure to observe the above may damage the softstarter and the warranty may no longer be valid.

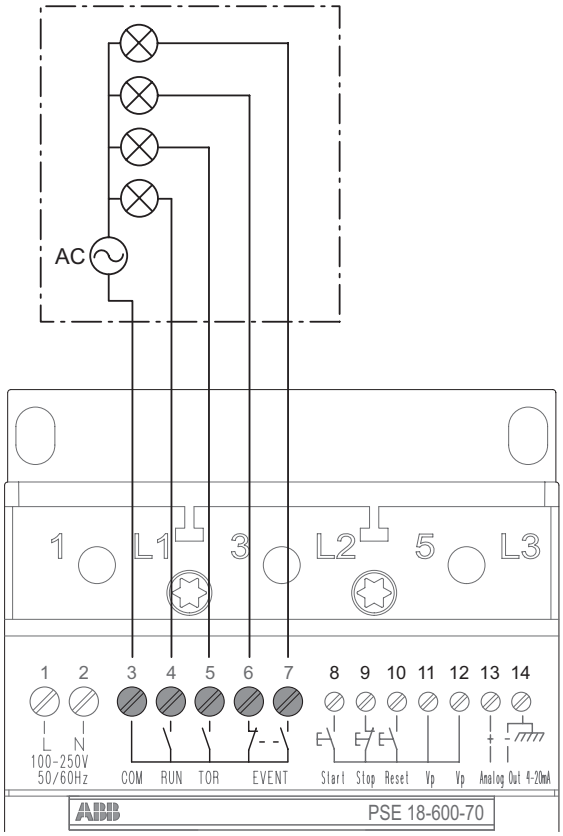

Figure 5.17: Terminals for status output signals

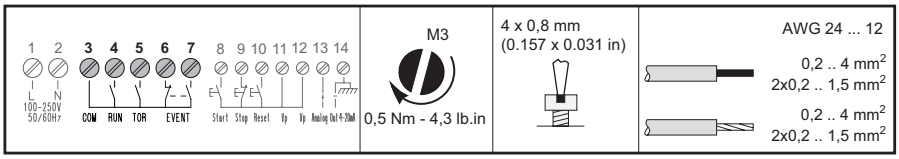

Figure 5.18: Tightening torques and wire area

5.3 Connection of communication devices (optional)

5.3.1 External keypad

An external keypad for door mounting can be connected to the softstarter. A 3-meter cable including both the communication and the power supply to the keypad makes the connection. The cable shall be connected to the external keypad connection at the bottom of the softstarter. See Figures 5.19 and 5.20.

The external keypad can also be used for transferring parameters from one softstarter to another. Note that IP66 cannot be achieved when the keypad is not mounted.

When the external keypad is used, both keypads will work in parallel, but the softstarter built-in keypad always has the highest priority if the keys on both units are pressed simultaneously.

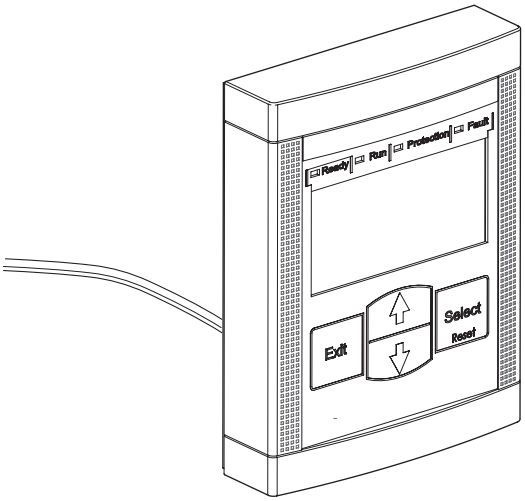

Figure 5.19: External keypad

5.3.1.1 Technical data for External Keypad

General data	
Display	LCD type
Status indicating LEDs	Ready: Green Run: Green Proction: Yellow Fault: Red
Ambient temperature	Storage: -40 °C to +70 °C (-40 °F to 158 °CF). Operation: -25 °C to +60 °C (-13 °F to +140 °F).
Standards	IEC/EN 60947-4-2 UL508 CSA C22.2 No 14
Environmental ratings	IP66 UL Type 1, 4X Indoor, 12

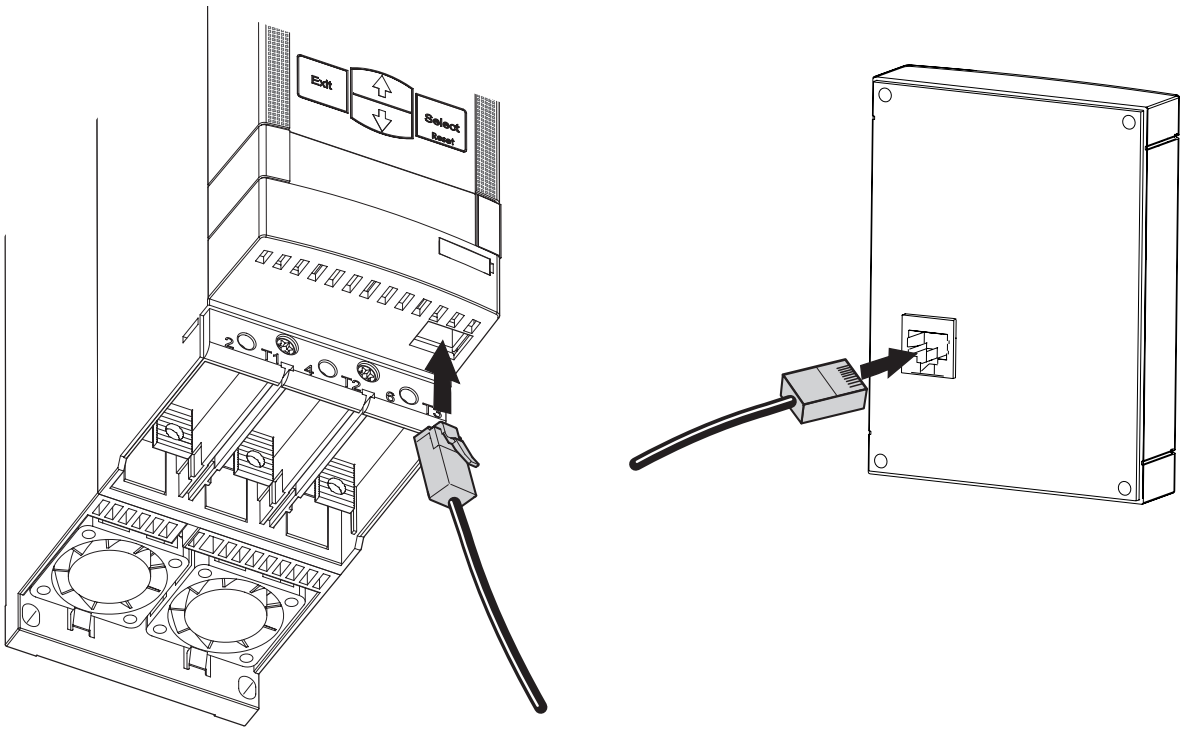

Figure 5.20: Connection of external keypad

5.3.1.2 Transfer of parameters

To transfer (copy) parameters from one PSE Softstarter to another, connect the External keypad to the chosen softstarter and follow the sequence below. For more information about navigating, see Chapter 6 in this manual. The Transfer Parameter menu is hidden and only possible to reach when the external keypad is connected to the softstarter. Start in Settings Level with cursor on I_e icon. Press Arrow Up to enter Transfer Parameter menu, and the text tP will be displayed on the LCD.

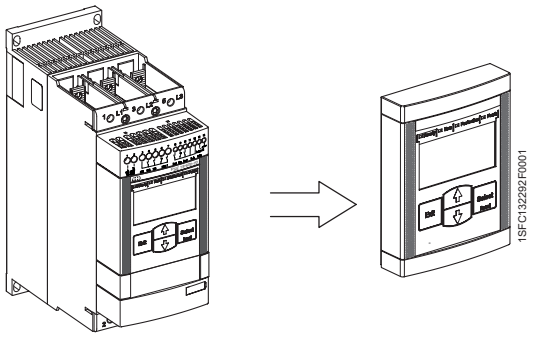

Figure 5.21: Transfer of parameters from softstarter to external keypad

5.3.1.2.1 Transfer of parameters from softstarter to external keypad

Transfer of parameters from softstarter to external keypad is possible in all states, except during ramping. During ramping it is not possible to enter the TP menu.

When you are in the Transfer Parameter menu confirm and continue by pressing Select. A text toSS will now be present on the LCD display. Scroll to FrSS and confirm selection by pressing Select key, and the text FrSS will now be flashing. Continue and transfer by pressing Select. If the transfer was successful, the text donE will be displayed on the LCD, otherwise a fault code will be displayed. Press Exit or select to return to Transfer Parameter menu. Press then exit for returning to a higher menu level.

5.3.1.2.2 Transfer of parameters from external keypad to softstarter

Transfer of parameters from external keypad to softstarter is possible only in standby state. During ramping, it is not possible to enter the TP menu. If transfer of parameters is done during TOR, a fault code will be displayed.

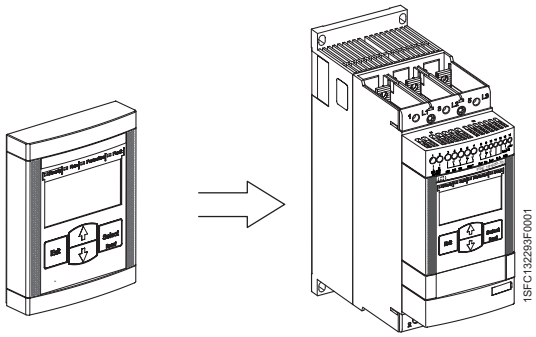

Figure 5.22: Transfer of parameters from external keypad to softstarter

When you are in the Transfer Parameter menu confirm and continue by pressing Select. A text toSS will now be present on the LCD display. Confirm selection of toSS by pressing Select key and the text toSS will now be flashing. Continue by pressing select. If valid parameters will be accepted, a value for parameter Rated Motor Current Ie will be displayed, otherwise a fault code will be displayed. Scroll and select a setting for Ie, see chapter 7.5.1. Confirm selection and save by pressing Select. If transfer is performed, the text donE will be displayed, otherwise a fault code will be displayed. Press Exit or Select to return to Transfer Parameter menu. Press Exit for returning to a higher menu level.

A list showing all parameters which will be transferred is available in chapter 7.3 List of available parameters.

The parameters Rated Current of the motor and PSE will not be transferred.

Display	Description
tP	Transfer Parameter
toSS	Transfer of parameters from external keypad to softstarter
FrSS	Transfer of parameters from softstarter to external keypad
donE	Confirmation of successful transfer

How to operate the External keypad, see Chapter 6 Human-Machine Interface (HMI).

5.3.2 Fieldbus communication

See Chapter 8 Fieldbus communication.

This page is intentionally left blank.

Chapter 6 Human-Machine Interface (HMI)

Overview 46
Application 46
Design 46
LED status indicators 47
LCD display and keypad 48
Locking/unlocking the keypad 49
Reset of all settings 49
Reset of tripping events 49
Menu structure 50
Information Level 50
Settings Level and settings menu 50
Navigating the menu 52

Chapter 6 Human-Machine Interface

This chapter describes how the Human-Machine Interface (keypad, LED status indicators and LCD display) works.

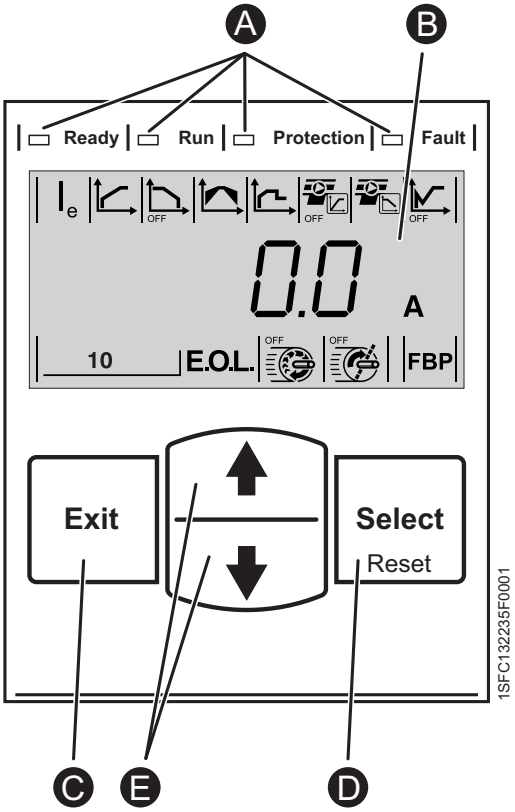

Figure 6.1:

Ⓐ LED status indicators.

Ⓑ LCD display with backlight.

Ⓒ Exit key for cancelling parameter edits and exiting one menu level.

Ⓓ Select/Reset key for changing and storing parameter values, entering one menu level, and to reset tripping events.

Ⓔ Navigation keys for navigating the menu and changing parameter values. Flashing numbers or text shown in the display indicates that the menu/value can be changed or scrolled.

6.1 Overview

6.1.1 Application

The Human-Machine Interface is used for several purposes such as setting up the PSE Softstarter parameters, including protection functions and fieldbus communication. The HMI is also providing status information by LED status indicators and the LCD display.

The PSE Softstarter monitors and displays different values. When switching on the supply voltage the LCD will first display the Information Level, which is showing motor current, input voltage on the line side, power factor, and voltage to the motor.

The Information Level also displays information on whether the keypad is locked or unlocked.

6.1.2 Design

The appearance of the HMI is showed in figure 6.1.

The HMI consists of:
- LED status indicators
- LCD display with backlight
- Selection and navigation keys

On start-up all LCD segments and LEDs will be briefly illuminated.

The LCD backlight will automatically turn off after some time of inactivity. Turn it on by pressing any key.

When switching on the supply voltage the LCD will first illuminate all available segments, LEDs and the backlight. Thereafter the Information Level is displayed. See figure 7.1.

6.1.2.1 LED status indicators

The LED status indicators work as in table 6.1:

Table 6.1

LED	Color	Description
Ready	Green	• **Off:** when control supply voltage U_S is off or unconnected. • **Flashing light** when control supply voltage U_S is On and operational voltage U_e is Off. • **Steady light** when control supply voltage U_S is On, and operational voltage U_e is On.
Run	Green	• **Off** when the motor not is running. • **Flashing light** when softstarter is controlling operational voltage U_e during start or stop ramp. • **Steady light** when full operational voltage U_e is on at Top of Ramp.
Protection	Yellow	• **Off:** when the softstarter has not tripped on any protection • **Steady light** on protection when reset is not possible. • **Flashing light** on protection when reset is possible.
Fault	Red	• **Off:** when the softstarter has not tripped on any fault • **Steady light** on fault when reset is not possible. • **Flashing light** on fault when reset is possible.
When fault or protection LED is activated, the LCD display will show the actual fault or protection as an event code. See table 10.1.		

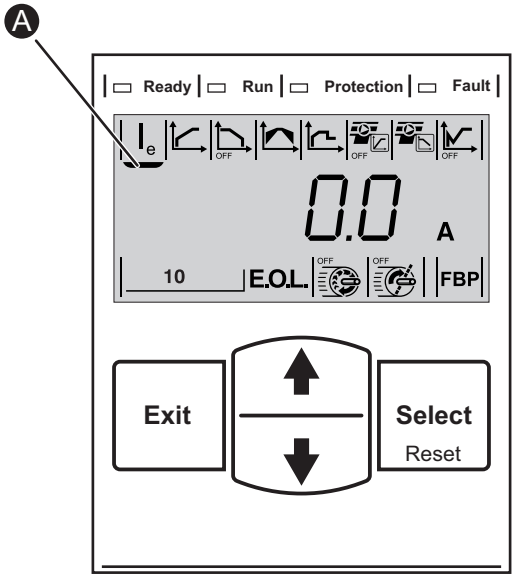

Figure 6.2: Cursor indicating parameter accessible for configuration

6.1.2.2 LCD display and keypad

The keypad is based on the same user concept as common on mobile phones. See figure 6.1.

The LCD display contains three rows. The top row has 8 parameter icons. The middle row has a lock symbol, 4 digits and units. The bottom row has 4 parameter icons.

On the middle row various information is presented.

A cursor Ⓐ indicates which parameter value is possible to change at each position, as shown in figure 6.2.

The Exit key for cancelling parameter edits and for exiting one menu level.

The Select/Reset key normally has more than one function, such as selecting, changing, storing, and manual reset of tripping events, depending on present view.

The navigation keys are used for navigating in the menu and changing parameter values. Flashing numbers or text shown in the display indicates that the parameter value can be changed or scrolled.

If key is held down, scrolling will be faster. When selecting from a list, the scrolling is done in a closed loop.

You will find a description of all settings in Chapter 7 Functions and configuration and configuration.

The menu structure of the keypad is illustrated in figure 6.7.

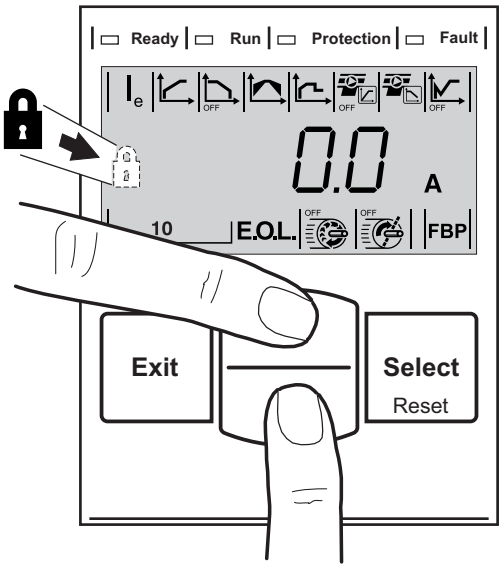

Figure 6.3: Locking/unlocking the keypad

6.1.3 Locking/unlocking the keypad

1. Press the Exit key to exit to the Information Level.
2. The keypad is unlocked if the middle row is not indicating the lock icon to the right.
3. Press both Navigation keys 4 seconds to lock the keypad, and protect all parameter settings from unintentional change from the keypad. See figure 6.3.
4. The keypad is locked if the a padlock is present on the middle row.
5. Press both Navigation keys 2 seconds to unlock the keypad, and allow changes of the parameter settings.

6.1.4 Reset of all settings

How to reset all the changed parameters back to user default settings is described in chapter 7.7.1.

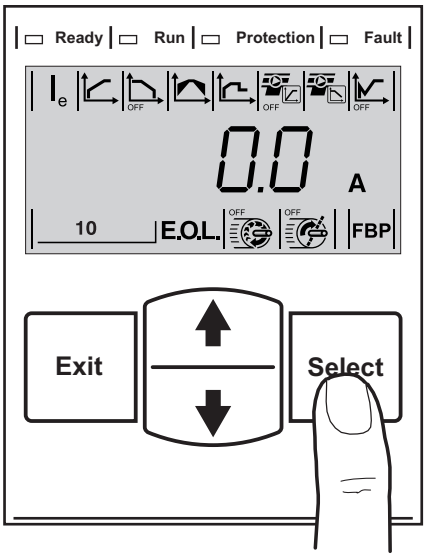

Figure 6.4: Reset of tripping events

6.1.5 Reset of tripping events

The Select/Reset key can be used to reset tripping events via the keypad, see figure 6.4. For details about resetting of tripping events, see chapter 7.6.

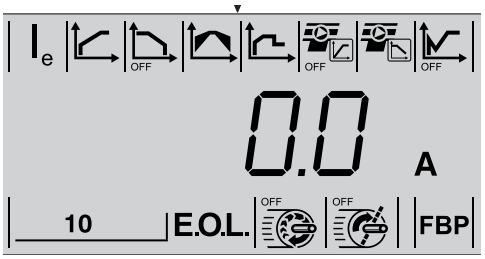

Figure 6.5: Information Level

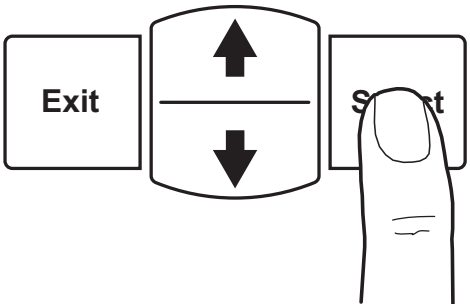

Figure 6.6: Enter Settings Level pressing the Select key.

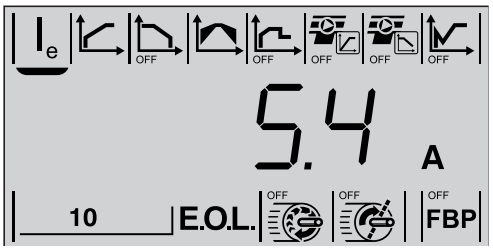

Figure 6.7: Settings Level

6.1.6 Menu structure

The structure of the menu is described in figure 6.8. All different parameters and levels of the menu, and how they can be reached by scrolling, are also described.

6.1.6.1 Information Level

By pressing a key the backlight will be switched on, and the Information Level will be displayed. The Information Level contains general operational information described in chapter 7.1.

Use navigation keys to present all selections. The selections are presented one by one on the middle row. See figure 6.5 and menu structure in figure 6.8.

6.1.6.2 Settings Level and settings menu

The Settings Level is reached from the Information Level by pressing the Select key. See figure 6.6. and menu structure in figure 6.8.

The settings menu is used to set up the PSE Softstarter with parameters for the current application.

Available settings are presented one by one on the top and bottom of the display. Use navigation keys to move the cursor to present all selections. In figure 6.7 the cursor is currently marking the parameter Rated Current I_e, which by pressing Select key a second time will be accessible for tuning.

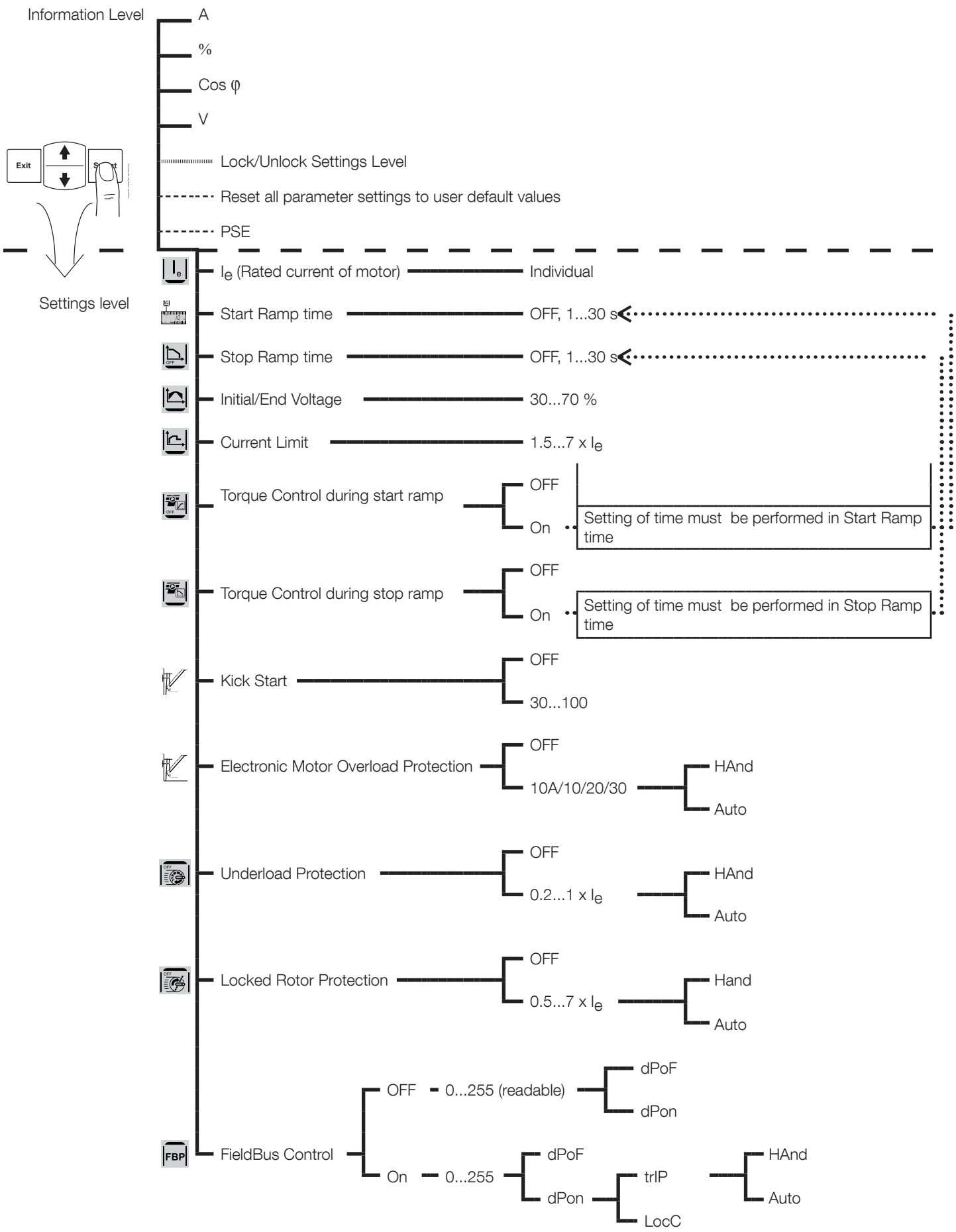

Figure 6.8: Menu structure PSE Softstarter

6.2 Navigating the menu

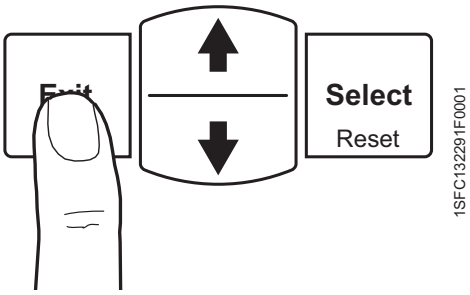

Figure 6.9: Press Exit key to cancel and to go to a higher level of the menu.

The menu is navigated by the keypad. The Navigation keys are used to scroll up or down. The Select key is used to select a setting and save. The Exit key is used to cancel without selecting or saving a setting, and to go to a higher level of the menu, as illustrated in figure 6.9.

1. Turn on the backlight by pressing any key.
2. On the Information level use the Navigation keys for scrolling the different operational information.
3. Press the Select key to Enter the Settings level. See Ⓐ in figure 6.10. A cursor is marking the accessible parameter, in this case Rated Current I_e.
4. Press Select key again to enable editing of the parameter Rated Current. See Ⓑ in figure 6.10. A flashing value on the middle row indicates that the parameter is available for scrolling and for selection.
5. Increase or decrease the value by pressing Navigation key repeatedly. Holding the key down will speed up the scrolling. See Ⓒ in figure 6.10.
6. When the rated current of the motor is reached, press the Select key again to save. See Ⓓ in figure 6.10.
7. It is possible to select and adjust the other parameters by following the same procedure.
8. At any point, press Exit to cancel a setting, and return to the information level.

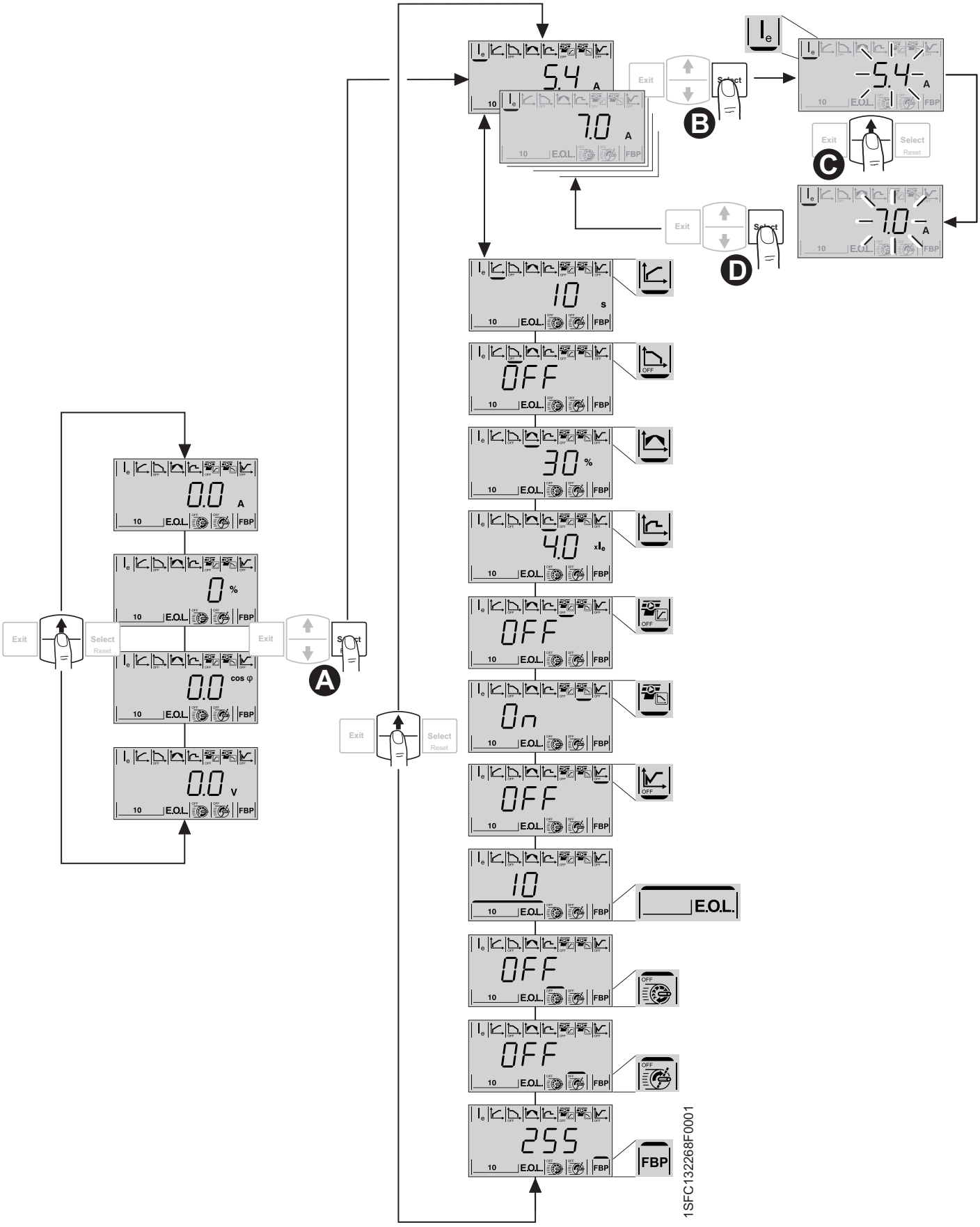

Figure 6.10: Navigating the menu

This page is intentionally left blank.

Chapter 7 Functions and configuration

Softstarter operational data 56
Parameter settings 56
List of available parameters 57
Basic settings principal 59
Functions 60
Rated Current I_e of motor 60
Start Ramp Time 60
Stop Ramp Time 61
Initial/End Voltage 62
Current Limit 63
Torque Control during start ramp 64
Torque Control during stop ramp 65
Kick Start 66
Electronic Motor Overload Protection E.O.L. 67
Underload Protection 68
Locked Rotor Protection 69
FieldBus Control (optional hardware required) 70
Fieldbus Address 71
Download Parameter 71
Fieldbus Operation When Fault 72
Type of Operation for Reset of Fieldbus Fault 73
Reset of tripping events 73
Special functions 74
Reset all parameter settings to user default values 74
PSE parameter 75
Representation of signals in time domain 76
Application settings 77

Chapter 7 Functions and configuration

How to navigate the menu, see Chapter 6 Human-Machine Interface (HMI), especially chapter 6.2 Navigating the menu.

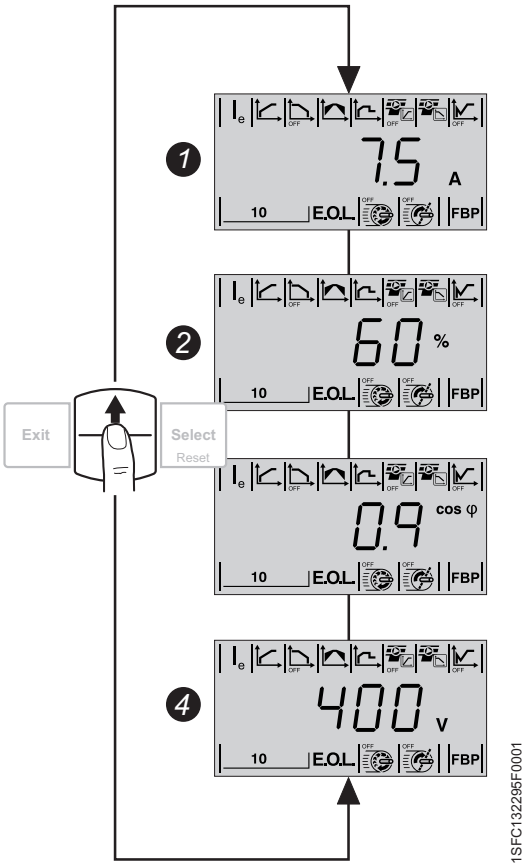

Figure 7.1: Information Level, displayed information

7.1 Softstarter operational data

The information level is the top level of the user menu. Information about output current, line voltage, power factor, and voltage to the motor is displayed.

On the information level the softstarter displays current values for:

❶ Motor current (A)
❷ Voltage to the motor (%)
❸ Power factor /Cos φ
❹ Input voltage on the line side (V)

The motor current is calculated as the maximum RMS value of the three phases. Using the motor current displayed on Information level as input for setting of Current Limit, may result in too low Current Limit. This may cause a longer starting time and unnecessary heating of the motor.

7.2 Parameter settings

Settings can be done in four different ways:
- Keypad
- Fieldbus communication (option)
- External keypad (option)

With the keypad or external keypad, settings can be done as individual parameter setting of all essential parameters.

When the fieldbus communication (option) is enabled, most parameters can also be modified from this interface.

User default parameter set is stored in the unit for a possible reset to default values. See chapter 7.7.1 about resetting parameters to user default values.

Caution!

The motor may start unexpectedly if there is a start signal present, when doing any of the actions listed below.
- ***Switching from one type of control to another (fieldbus control / hard-wire control).***
- ***Resetting events.***
- ***Using automatic event reset.***

7.3 List of available parameters

A list of the available parameters for PSE18...PSE370 is visible in table 7.1.

Table 7.1

Description	Display symbol	Setting range	Default value	Access from		Parameter transfer with External Keypad	Actual setting
				HMI	Fieldbus		
Rated Current of motor I_e		Individual See tables in chapter 3.7.3 PSE Softstarter types. Setting range is 30-100 percent of I_e	Individual	W	W		
Start Ramp time		1...30 s	10 s	W	W	T	
Stop Ramp time		OFF, 1...30 s	OFF	W	W	T	
Initial/End Voltage		30...70 %	30 %	W	W	T	
Current limit		1.5 x 7 I_e	4.0 x I_e	W	W	T	
Torque Control during start ramp		OFF/On	OFF	W	W	T	
Torque Control during stop ramp		OFF/On	On	W	W	T	
Kick Start		OFF, 30...70 %	OFF	W	W	T	
Electronic Motor Overload Protection (EOL)						T	
Tripping Class (EOL)		10 A, 10, 20, 30	10	W	W	T	
Type of operation (EOL)		HAnd/Auto ❶	HAnd	X	X	T	

R = Readable

W = Writeable

T = Will be transferred (uploaded/downloaded)

Description	Display symbol	Setting range	Default value	Access from		Parameter transfer with External Keypad	Actual setting
				HMI	Fieldbus		
Underload Protection	OFF					T	
Level	OFF		OFF	W	W	T	
Type of operation	HAnd	❶	HAnd	W	W	T	
Locked Rotor Protection	OFF					T	
Level			OFF	W	W	T	
Type of operation	HAnd	❶	HAnd	W	W	T	
Fieldbus Control	OFF 1SFC132857F0001	OFF/On ❷	OFF	W	R	T	
Fieldbus address	255	255	255 ❸	W	R	T	
Download Parameter	dPoF	dPoF/dPon ❹	dPon	W	R	T	
Fieldbus Operation When Fault	trIP	LocC/trIP ❺	LocC	W	R	T	
Type of Operation	HAnd	HAnd/Auto ❻	HAnd	W	R	T	

R = Readable

W = Writeable

T = Will be transferred (uploaded/downloaded)

❶ *HAnd = Manual reset of the protection or fault.*
Auto = Automatic reset of the protection or fault.
❷ *OFF = Fieldbus is not allowed to control the motor.*
On = Fieldbus is allowed to control the motor.
❸ *255 = Address of the FieldBusPlug will be used.*
❹ *dPon = Download of parameters from PLC enabled.*
dPoF = Download of parameters from PLC blocked.
❺ *Accessible only if On is previously selected.*
trIP = Trip on fault.
LocC = Local control on fault - hardwire control is possible
❻ *Accessible only if trIP is previously selected.*
HAnd = Manual reset of the protection or fault.
Auto = Automatic reset of the protection or fault.

7.4 Basic settings principal

The Settings level (menu) consists of predefined parameters for the selected application which should be used if an easy and quick set-up is required.

At any point, press Exit to cancel a setting and return to the information level.

1. Illuminate the display by pressing any of the keys.

2. From Information Level, enter Settings Level by pressing Select key. See figure 7.2.

3. Enter the setting for the Rated Current I_e by pressing Select key.
4. Set I_e using the navigation keys. Since the motor must be connected In Line, use the motor current on the rating plate.
5. Press Exit to Cancel, or Select to save.
6. Continue to the Start Ramp time setting, or press Exit key to return to the Information Level.

7. Go to the Start Ramp time setting using the lower navigation key.
8. Press Select and adjust the time using the navigation keys.
9. Press Select to save and continue, or press Exit to cancel and return to the Information Level.

10. Go to Stop Ramp time setting using the lower navigation key.
11. Press Select. Choose OFF or adjust the time using the navigation keys.
12. Press Select to Save and continue to the next parameter, or Exit to Cancel and return to the Information level.

13. Go to the setting Initial/End Voltage using the lower navigation key.
14. Press Select, and adjust the value using navigation keys.
15. Press Exit to Cancel, or Select to save and continue.

16. Go to Current Limit by pressing the lower navigation key.
17. Press Select, and set the Current Limit factor On or OFF using the navigation keys.
18. Press Exit to Cancel or Select to save and continue.

19. Press upper lower navigation key to continue to EOL class.
20. Press Select, and scroll with the navigation keys to choose the required Tripping Class, or OFF.
21. Press Exit to Cancel or Select to save and continue.
22. Press Select to set User or Auto.
23. Scroll using the navigation keys.
24. Press Select to save and continue.

25. Press Exit to return to the information level.

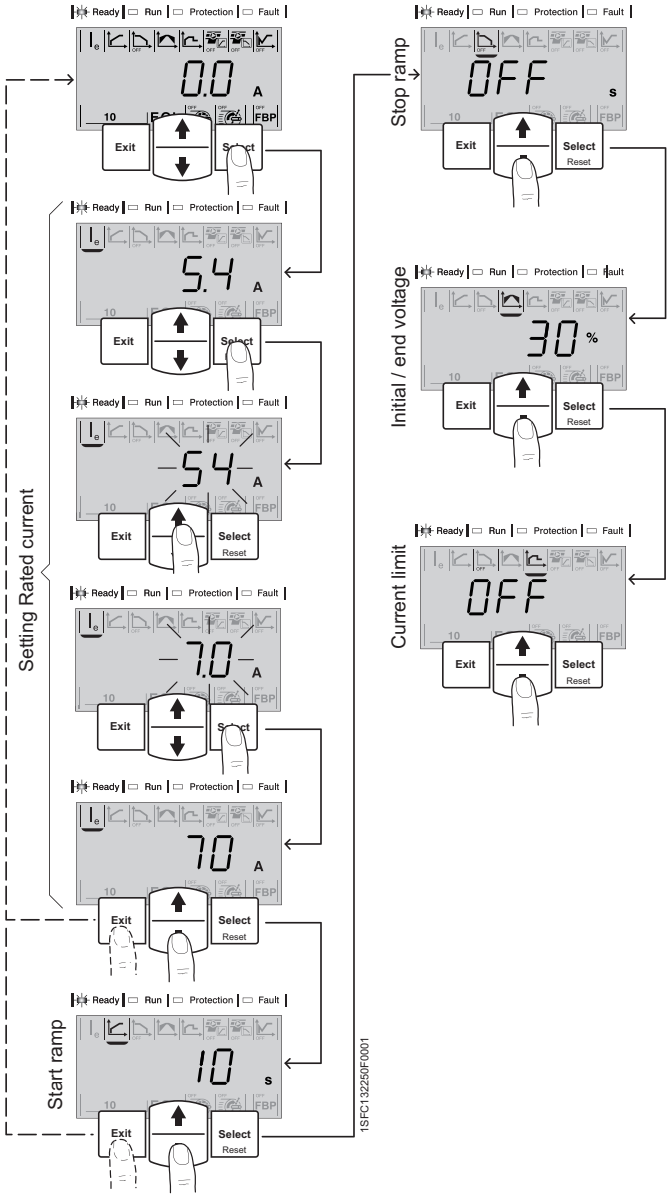

Figure 7.2: Basic configuration of frequently used parameters

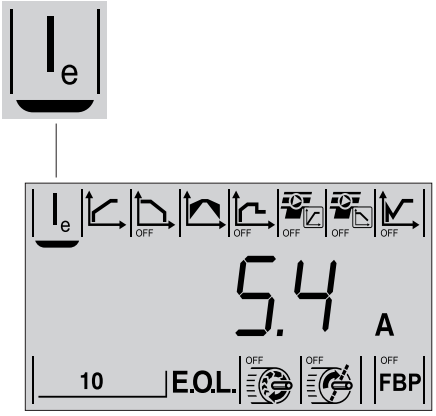

Figure 7.3: Rated Current parameter displayed

7.5 Functions

This chapter describes all settings and functions possible in the PSE Softstarter, as well as the easiest way of finding them. Respective default values, setting ranges and parameter strings shown in the display are also stated.

7.5.1 Rated Current I_e of motor

This parameter allows for configuring of the current that the softstarter will be exposed to. Since the motor must be connected In Line, set the rated motor current, which can be found on the motor rating plate.

Display	Default value	Setting range	Description
	Individual (depending on size)	Individual (depending on size) See tables in chapter 3.7.3 PSE Softstarter types. Setting range is 30-100 percent of I_e	Rated motor current I_e

Caution!

Connecting Softstarters PSE18...PSE370 Inside Delta will cause damage to the equipment, and there is a risk of death or serious injury.

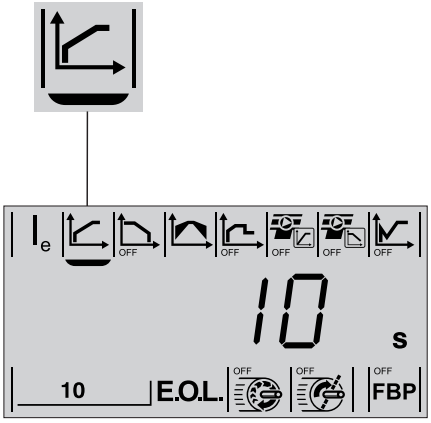

Figure 7.4: Start Ramp Time parameter displayed

7.5.2 Start Ramp Time

The Start Ramp Time parameter allows for tuning of the time for the start ramp to reach full voltage (Top of Ramp, TOR).

This parameter is controlling both voltage controlled and torque controlled start ramps.

When a start signal is given the PSE Softstarter performs a start ramp by controlling the output voltage to the motor so that the voltage is increased linearly from the initial voltage level to full voltage. Since the torque depends on both the voltage and the current, the torque curve does not always follow the voltage curve. This has the effect that the torque curve will not increase linearly. If parameter Torque Control Start is set to OFF, a voltage ramp will be performed during the start ramp. The voltage and RPM of the motor will follow the graph in figure 7.5. If a torque curve with linear increase is preferred, choose Torque Control during start ramp described in chapter 7.5.6.

Display	Default value	Setting range	Description
	10 s	0-30 s	Setting time for voltage controlled, and torque controlled, start ramps

The time set in Start Ramp Time is also the setting for the time in Torque Control Start, if this parameter is enabled.

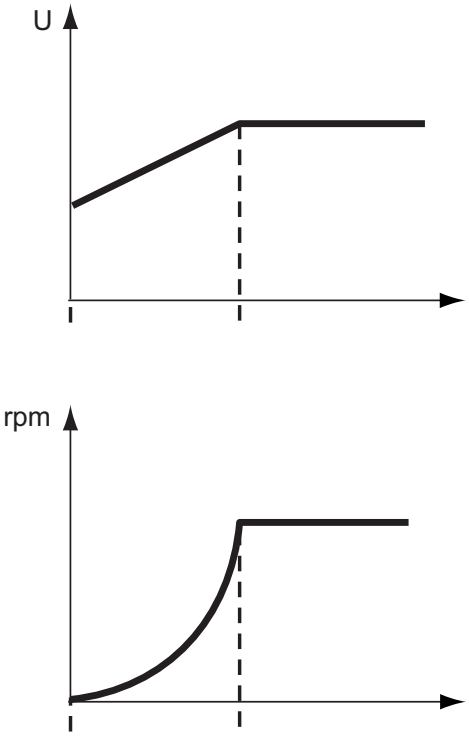

Figure 7.5: The function of Start Ramp Time

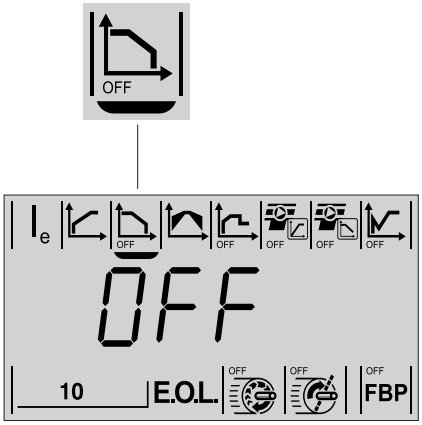

Figure 7.6: Stop Ramp Time parameter displayed

7.5.3 Stop Ramp Time

The Stop Ramp Time parameter allows for tuning of the time for the stop ramp to reach the End Voltage from Top of Ramp (TOR).

When a stop signal is given the PSE Softstarter performs a stop ramp by controlling the output voltage to the motor so that the voltage is decreased linearly from full voltage to the end voltage level. Since the torque depends on both the voltage and the current, the torque curve does not always follow the voltage curve. This has the effect that the torque curve will not decrease linearly. If parameter Torque Control during stop is set to OFF, will a voltage ramp be performed during the stop ramp. The voltage and RPM of the motor will follow the graph in figure 7.7. If a torque curve with linear decrease is preferred, set Torque Control during stop to On. See chapter 7.5.7.

This parameter shall be set to OFF for applications with a big flywheel mass involved.

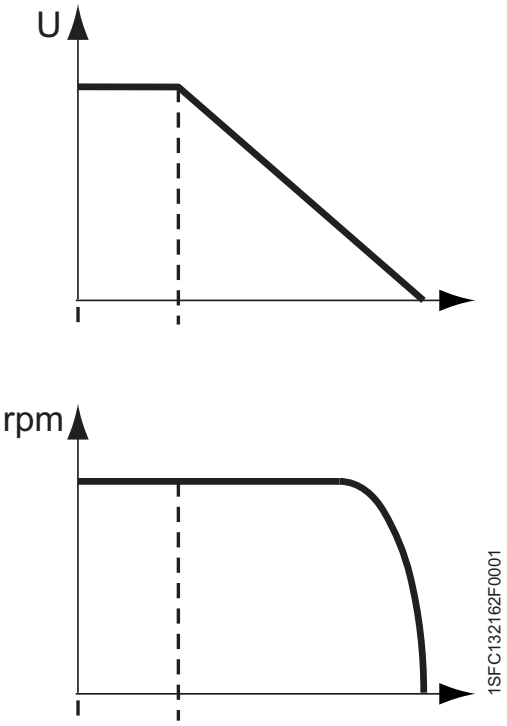

Figure 7.7: The function of Stop Ramp Time

Display	Default value	Setting range	Description
OFF	OFF	0-30 s	Setting time for voltage controlled and torque controlled, stop ramps

The time set in Stop Ramp Time is also the setting for the time in Torque Control Stop, if this parameter is enabled.

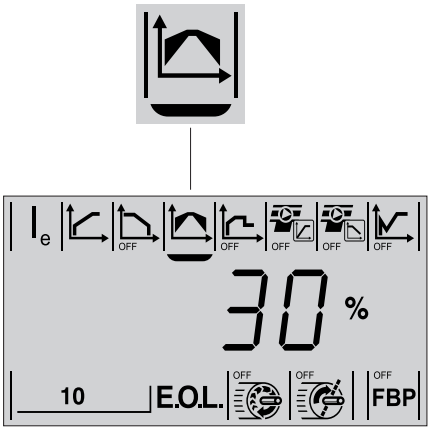

Figure 7.8: Initial/End voltage parameter displayed

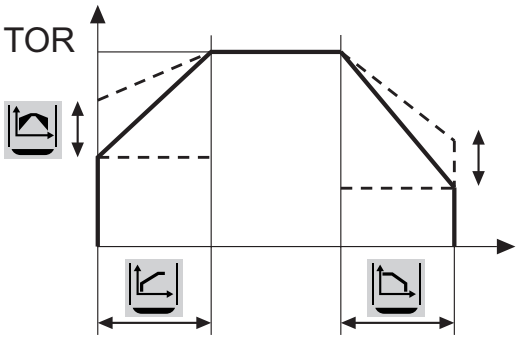

Figure 7.9: The function of Initial/End Voltage

7.5.4 Initial/End Voltage

This parameter makes it possible to set the initial voltage level where the start ramp begins. The value for end voltage where the stop ramp ends, will automatically be 10 percent lower than the initial voltage.

During start ramp will then the voltage increase from the initial voltage level, to full voltage.

During stop ramp will the voltage decrease from full voltage to the end voltage level and then cut the power to the motor. Figure 7.9.

If the initial voltage is set too low, it will cause longer starting time and unnecessary heating of the motor. The motor might not reach full speed (TOR).

Display	Default value	Setting range initial voltage	Description
	30 %	30-70 %	Initial and end voltage for start ramp and stop ramp

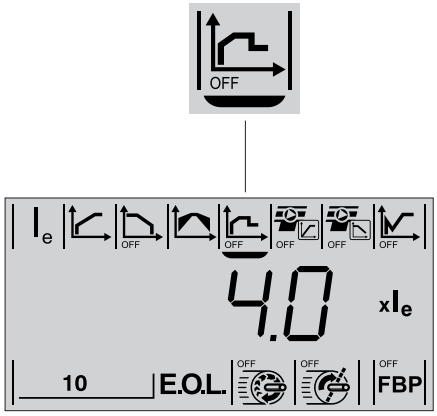

Figure 7.12: Current Limit parameter displayed

7.5.5 Current Limit

It is possible to limit the starting current by using this function. The limit can not be exceeded during start and stop ramp. When the Current Limit is reached, the output voltage stays stable until the current level falls below the limit, then the ramping continues.

The relation between Current Limit, the current I to the motor and the output voltage is described in figure 7.13.

The starting current must be high enough to make it possible for the motor to reach the rated speed. The lowest possible current depends on the performance of the motor and the characteristics of the load. If the Current Limit is set too low, it will cause longer starting time and unnecessary heating of the motor.

Display	Default value	Setting range	Description
	4 x I_e	7...1.5 x I_e	Level of Current Limit in relation to output voltage.

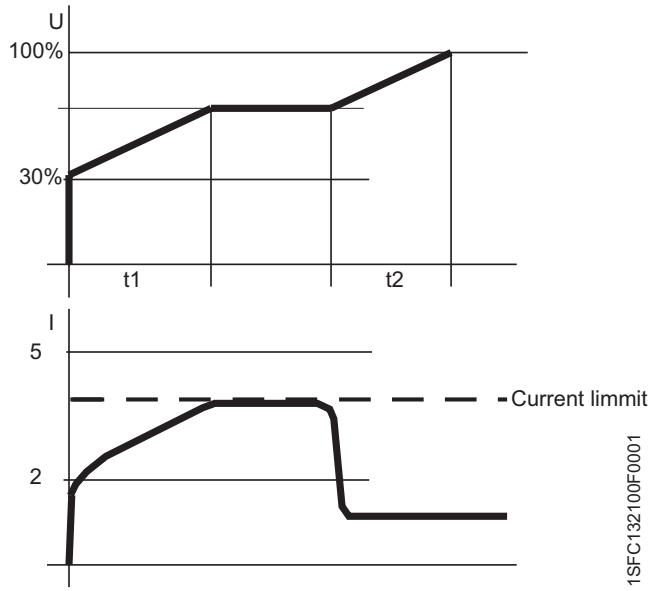

Figure 7.13: The relation between the Current Limit , the current I to the motor, and the output voltage U

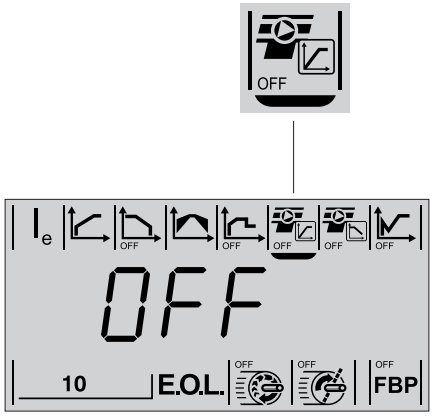

Figure 7.14: Torque Control during start ramp parameter displayed

7.5.6 Torque Control during start ramp

It is possible to use the torque control during the start by activating this parameter. Torque control results in a more linear accelerating of the speed in a majority of applications.

When using the torque control the output voltage to the motor is controlled so that the motor torque will follow a predefined optimal curve from the initial voltage level to full voltage during start.

This has the benefit that the mechanical starting behavior of the equipment driven by the motor will be much softer compared to the use of voltage ramp. During the torque controlled start the motors voltage and RPM will follow the graph in figure 7.15.

During start ramp, the output voltage to the motor is controlled so that the torque will follow a predefined optimal curve from the initial voltage level to full, voltage during start. This has the benefit that the mechanical starting behavior of the equipment driven by the motor will be much softer compared to the use of voltage ramp. During the torque controlled start the voltage U and RPM of the motor will appear as the graphs in figure 7.15.

Display	Default value	Setting range	Description
OFF	OFF	On/OFF	Torque Control during start

The time for the Torque Control during start ramp is set in the parameter Start Ramp time.

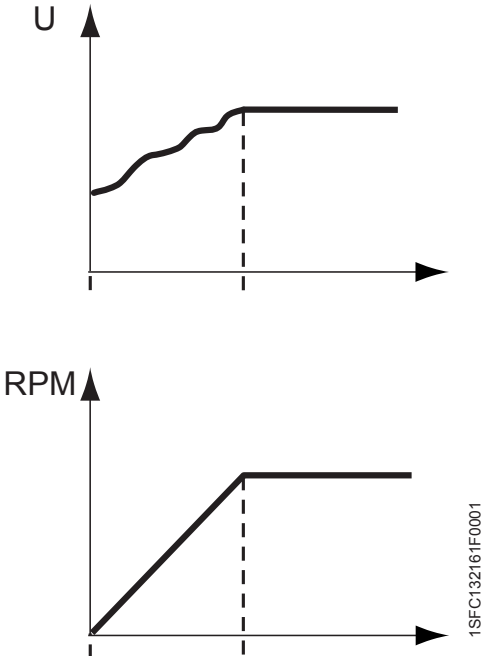

Figure 7.15: The function of Torque Control during start

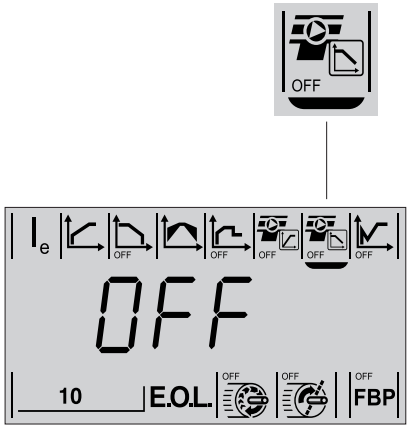

Figure 7.16: Torque Control during stop ramp parameter displayed

7.5.7 Torque Control during stop ramp

When activating this parameter (On) makes it possible to control the motor torque during stop. Using torque control will result in a more suitable decelerating of the speed mainly requested when stopping pumps.

When using torque control the output voltage to the motor is controlled so that the motor torque will follow a predefined optimal curve for best possible stop. This has the benefit that the mechanical stopping behavior of the equipment driven by the motor will be much softer compared to using voltage ramp. This can be especially useful in pump applications where a sudden stop can cause water hammering and pressure surges. During the torque controlled stop the motors voltage and RPM will follow the graphs in figure 7.17.

Display	Default value	Setting range	Description
	OFF	On/OFF	Torque Control during stop ramp

The time for the Torque Control during stop ramp is set in the parameter Stop Ramp time.

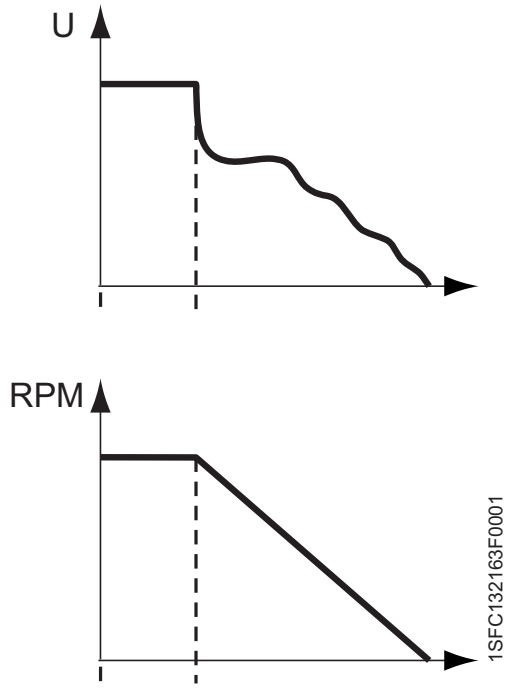

Figure 7.17: The function of Torque Control during stop ramp

7.5.8 Kick Start

This parameter makes it possible to tune the kick start voltage level which is applied for a short time duration, before a normal start ramp is performed. Kick Start provides enough torque during start, but still ensuring a soft start.

It can be set on any of the predefined voltage levels. For each voltage level there is a fixed time duration relation (t), which is increasing with the different kick voltage levels. This function can be useful for applications with high initial friction or having a need of extra power in the first part of the start, as jammed pumps or conveyor belts. See table 7.2 and graph in figure 7.19.

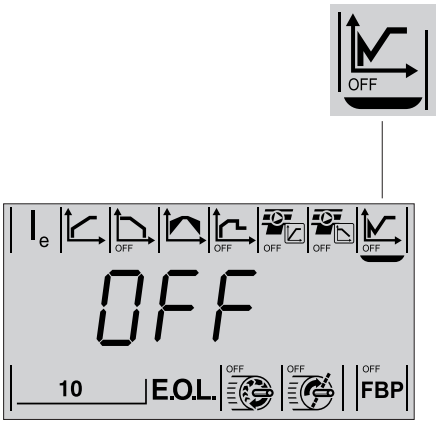

Figure 7.18: Kick Start parameter displayed

Table 7.2 Kick Start settings

Kick start setting	Kick start voltage U_e (percent)	Kick start time t (s)
30	30	0.30
35	35	0.35
40	40	0.40
45	45	0.45
50	50	0.50
55	55	0.55
60	60	0.60
65	65	0.65
70	70	0.70
75	75	0.75
80	80	0.80
85	85	0.85
90	90	0.90
95	95	0.95
100	100	1.00

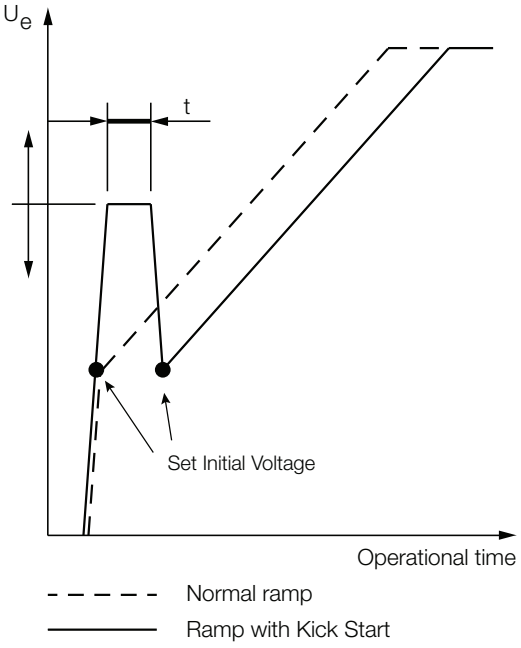

Figure 7.19: The function of Kick Start

Note that the Current Limit function is not working during Kick Start.

Display	Default value	Setting range	Description
	OFF	OFF, 30...100 %	Level of Kick Start

7.5.9 Electronic Motor Overload Protection E.O.L.

This parameter makes it possible to set the required class of motor overload protection. Four different classes are available. See figure 7.21.

- Class 10A
- Class 10
- Class 20
- Class 30

There is an option for type of reset after tripping. Hand or automatic is available. Hand is default value for reset of Electronic Motor Overload Protection after tripping.

Reset of this protection is not possible before measuring a lower temperature, which must be reached by the motor.

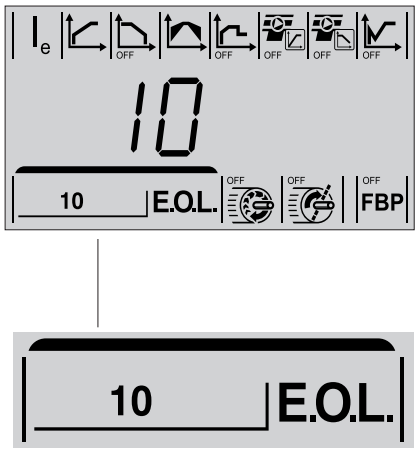

Figure 7.20: Electronic Motor Overload Protection EOL parameter displayed

Display	Default value	Setting range	Description
10 E.O.L.	10	OFF, 10A, 10, 20, 30	Tripping class for Electronic Motor Overload Protection (E.O.L)
HAnd Auto	HAnd	HAnd/Auto	Type of operation for reset of Electronic Overload Protection (E.O.L) [1]

1. HAnd = Manual reset: ⇨ When tripping will stop the motor, a manual reset is required before restart can be done.
   Auto = Automatic reset: ⇨ When tripping will stop the motor, an automatic reset is performed before the unit is ready for restart.

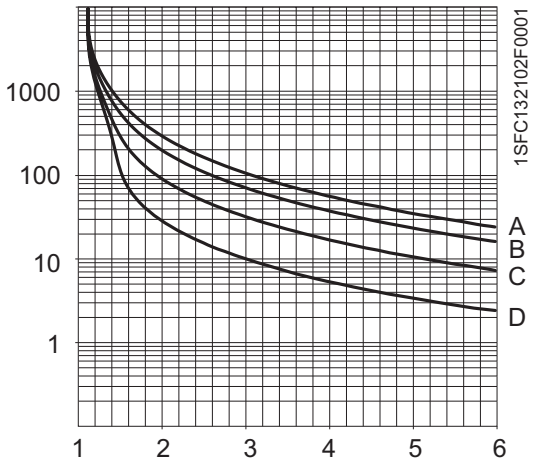

Figure 7.21: Tripping curves for the Electronic Motor Overload Protection (E.O.L.)

A Class 30
B Class 20
C Class 10
D Class 10A

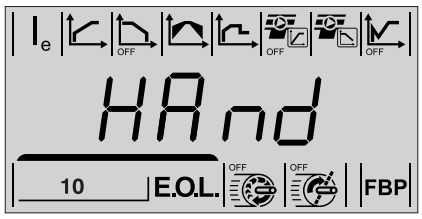

Figure 7.22: Type of operation for reset of Electronic Motor Overload Protection fault parameter displayed

7.5.10 Underload Protection

When active the Underload Protection trip if the current (I_e) will fall to a lower level than the set value for 30 seconds or more.

This protection could be used to avoid for example a pump running dry, detect a broken belt or similar.

There is an option for type of reset after tripping, hand or automatic. HAnd is default value for reset of Locked Rotor Protection after tripping.

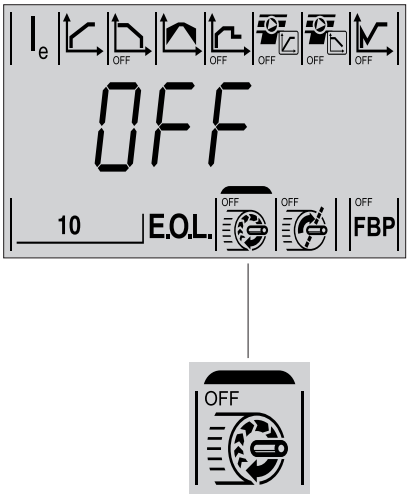

Figure 7.23: Underload Protection parameter displayed

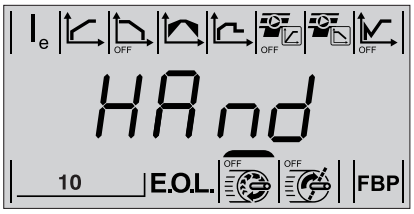

Figure 7.24: Type of operation for reset of Underload Protection fault parameter displayed

Display	Default value	Setting range	Description
OFF	OFF	OFF, 0.2...1 x I_e	Level of Underload Protection
HAnd Auto	HAnd	HAnd/Auto	Type of operation for reset of Underload Protection [1]

1. HAnd = Manual reset: ⇨ When tripping will stop the motor, a manual reset is required before restart can be done.
   Auto = Automatic reset: ⇨ When tripping will stop the motor, an automatic reset is performed before the unit is ready for restart.

7.5.11 Locked Rotor Protection

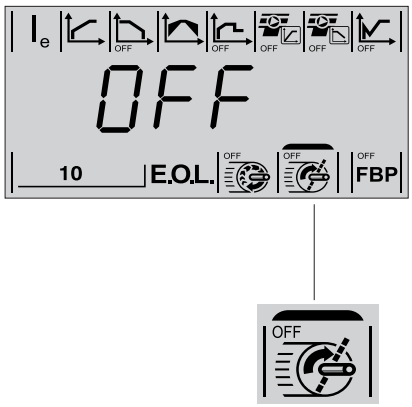

Figure 7.25: Locked Rotor Protection parameter displayed

This protection will when activated trip if the motor current exceeds the set level when the motor is running at full voltage. The Locked Rotor Protection parameter will be activated when the motor has been running at full voltage (Top of Ramp) for 30 seconds. The reaction time for tripping is 1 second.

Display	Default value	Setting range	Description
OFF	OFF	OFF, 0.5 - 7 x I_e	Level of protection for locked rotor
HAnd Auto	HAnd	HAnd/Auto	Type of operation for reset of Locked Rotor Protection [1]

1. HAnd = Manual reset: ⇨ When tripping will stop the motor, a manual reset is required before restart can be done.
   Auto = Automatic reset: ⇨ When tripping will stop the motor, an automatic reset is performed before the unit is ready for restart.

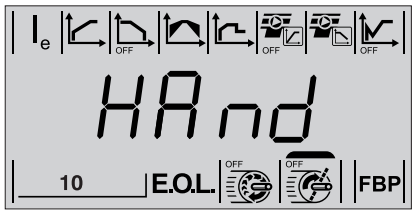

Figure 7.26: Type of operation for reset of Locked Rotor Protection fault parameter displayed

7.5.12 FieldBus Control (optional hardware required)

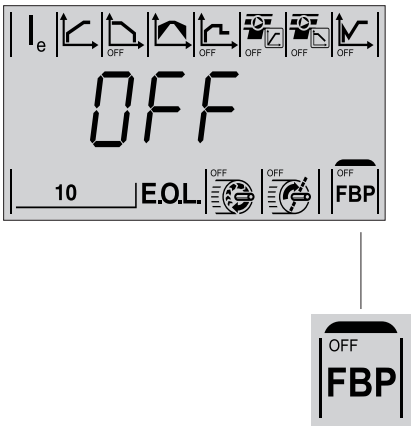

Figure 7.27 Fieldbus Control parameter displayed

This parameter is used for configuration of the fieldbus communication. Connecting the PSE Softstarter to the FieldBusPlug automatically enables fieldbus communication. To enable control of the softstarter using fieldbus, this parameter must be set to On. If FieldBus Control is set to OFF, fieldbus can only be used for monitoring softstarter data.

If this parameter is set to On, the softstarter might trip on fieldbus fault if no fieldbus communication is available. If the intention is to run without fieldbus control, this parameter should be set to OFF.

Caution!

The motor may start unexpectedly if there is a start signal present when doing any of the actions listed below.

- ***Switching from one type of control to another (fieldbus control / hardwire control). Remember that when parameter Fieldbus Fault Reaction is set to LocC, this switch can happen automatically.***
- ***Resetting of events.***
- ***If using automatic event reset.***

Fieldbus Control parameters and settings

Display	Default value	Setting range	Description
FBP	OFF	OFF/On	Control of the softstarter with fieldbus.
255	255	0...255	Fieldbus Address [1]
dPon dPoF	dPoF	dPoF/dPon	Possible to block parameter download from PLC [2].
LocC trIP	LocC	LocC/trIP	Operation When Fault [2]
HAnd Auto	HAnd	HAnd/Auto [4]	Type of operation for reset of Fieldbus Fault [3]

1. 255 = Address of FieldBus Control will be used.
2. Accessible only if Fieldbus Control previously is set to On.
3. Accessible only if trIP is previously selected.
4. HAnd = Manual reset: ⇨ When tripping will stop the motor, a manual reset is required before restart can be done.
   Auto = Automatic reset: ⇨ When tripping will stop the motor, an automatic reset is performed before the unit is ready for restart.

More information about Fieldbus communication and optional accessories is available in Chapter 8 Fieldbus communication.

7.5.12.1 Fieldbus Address

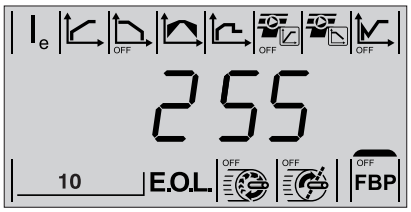

Figure 7.28: Fieldbus Address parameter displayed

The parameter Fieldbus Address allows setting of address for the fieldbus communication.

The setting range for the fieldbus address is 0...255. If the address is set to 255, the address stored in internal memory of the fieldbus plug will be used. See documentation for the fieldbus plug for more details on address setting.

It is possible to read and set this parameter via the keypad when Fieldbus Control is set to On or OFF.

Changing this parameter will automatically reset the fieldbus interface and the new address will be active. If PLC was communicating with the old address, the PLC needs to be re-configured.

Display	Default value	Setting range	Description
255	255	0...255	Fieldbus Address

7.5.12.2 Download Parameter

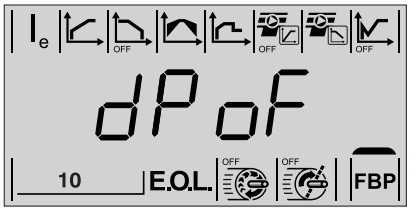

Figure 7.29: Download Parameter displayed

This parameter allows for blocking parameter download from the fieldbus. Note that download of parameters works differently for different fieldbus protocols. See documentation for the protocol used.

It is possible to read and set this parameter via the keypad when Fieldbus Control is set to On or OFF.

Display	Default value	Setting range	Description
dPon	dPon	dPoF/dPon	Download Parameter enabled.
dPoF			Download Parameter blocked.

7.5.12.3 Fieldbus Operation When Fault

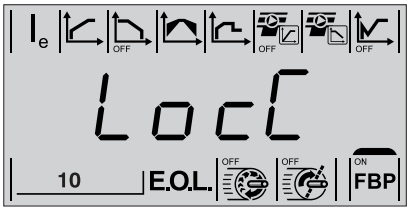

Figure 7.30: Fieldbus Operation When Fault parameter displayed

This parameter is accessible only if Fieldbus Control is previously set to On.

In case of fieldbus malfunction, for instance due to power loss or a broken cable, this parameter allows for different (operations in case of a fault) reactions to the fault.

Setting Fieldbus fault reaction to trIP will make the softstarter trip on a fieldbus fault. Selecting trIP makes reset of the fault necessary, in case of a tripping event.

When LocC is selected, the control of the softstarter will automatically switch from fieldbus control to local control. The switch to local control will make hard-wire control possible. When the Fieldbus starts working again the control is automatically switched back to the Fieldbus. There is a 10 second delay before controlling the motor is possible.

Display	Default value	Setting range	Description
LocC trIP	LocC	LocC,/trIP	Operation When Fault [1]

1. trIP = Trip on fieldbus fault.
   LocC = Automatically move to local control on fieldbus fault.

7.5.12.4 Type of Operation for Reset of Fieldbus Fault

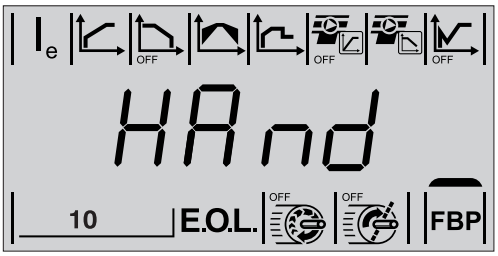

Figure 7.31: Type of operation for reset of Fieldbus fault parameter displayed

Select what operation shall be asserted if a fieldbus communication fault occurs. Manual or automatic options are available. HAnd is the default value for reset of Fieldbus Fault:

- If HAnd is selected - The motor will stop and manual reset is required.
- If Auto is selected - The motor will stop and automatic reset is performed.

This parameter is accessible only if trIP is previously selected for the parameter fieldbus Operation When Fault.

Display	Default value	Setting range	Description
HAnd Auto	HAnd	HAnd/Auto	Type of operation for reset of Fieldbus Fault. [1]

1. HAnd = Manual reset: ⇨ When tripping will stop the motor, a manual reset is required before restart can be done.
   Auto = Automatic reset: ⇨ When tripping will stop the motor, an automatic reset is performed before the unit is ready for restart.

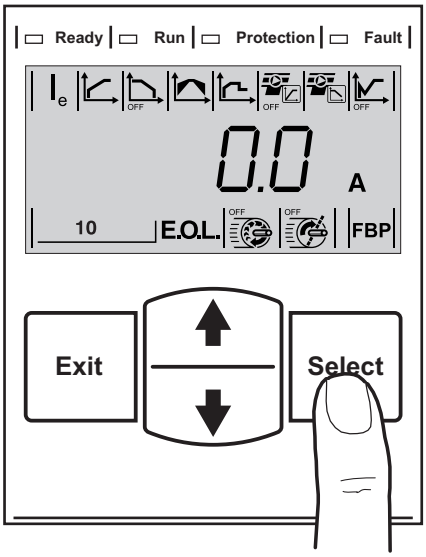

Figure 7.32: Reset of tripping events

7.6 Reset of tripping events

In case of tripping event the PSE Softstarter can be reset via hardwire, keypad, external keypad, or Fieldbus.

If the setting HAnd is chosen as an action in case of an tripping event for a parameter with this option, manual resetting of the softstarter is required.

If the setting Auto is chosen as an action in case of an tripping event for a parameter with this option, resetting of the softstarter will be performed automatically.

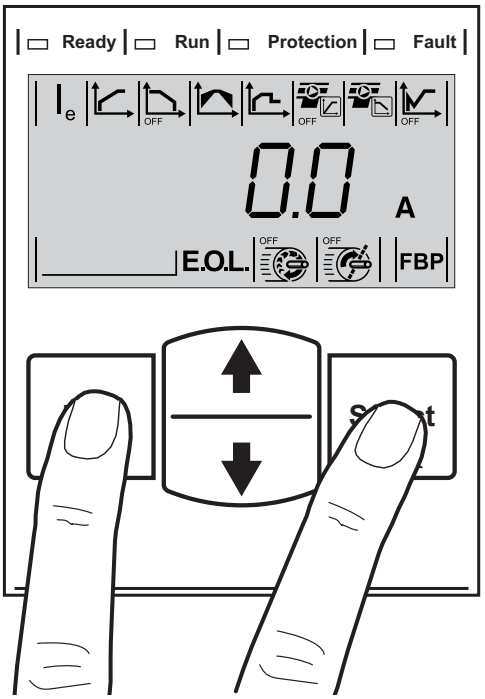

Figure 7.33: Entering menu Reset all settings to user default values

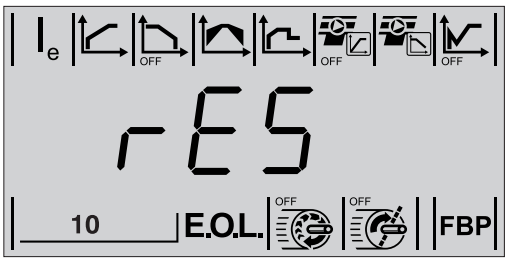

Figure 7.34: Reset All Settings to user default values parameter displayed

7.7 Special functions

7.7.1 Reset all parameter settings to user default values

Start from Information Level and press in sequence the keys Exit and Select for a few seconds, as described in figure 7.29. The text string “rES” will be displayed on the LCD as in figure 7.34.

Press Select to enter Reset All Settings, and the text string “rES” on the LCD starts flashing.

Press Exit key to cancel, or press Select to reset all settings.

After reset it is necessary to press Exit for returning to Information Level.

Caution!

The motor may start unexpectedly if there is a start signal present when doing any of the actions listed below.

- ***Switching from one type of control to another (fieldbus control / hard-wire control)***
- ***Resetting all parameters***
- ***Resetting events***
- ***If using automatic event reset***

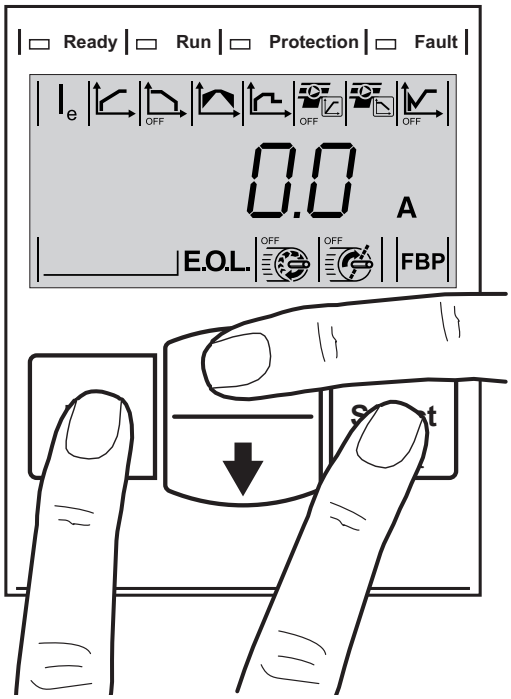

Figure 7.35: Entering PSE parameter

7.7.2 PSE parameter

This parameter contains information about the type of PSE Softstarter which is available. The PSE parameter must be configured after replacing the PCB. This parameter must not be changed if the PCB has not been replaced. Read chapter 3.3 Type designation to get information about how to find out the size of the softstarter.

Start from Information Level and press in sequence the keys Exit, Select and Arrow Up for a few seconds, see figure 7.31. The text string “Id” will be displayed on the LCD as in figure 7.36.

Press Select to enter parameter PSE, and the text string “Id” the LCD starts flashing.

Press Exit to return to Information level or Scroll to configure according to the softstarters size. Press Select to confirm.

Configure parameter PSE only if the printed circuit board has been replaced.

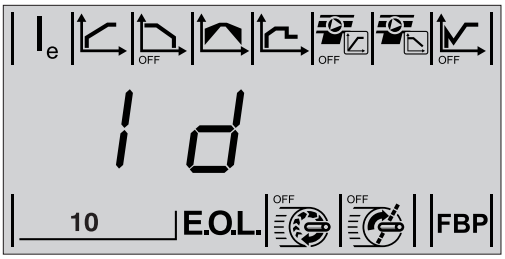

Figure 7.36: PSE parameter displayed

7.8 Representation of signals in time domain

Timing diagram for the basic functions of the softstarter, with a representation of a set of signals in the time domain is found in table 7.3.

Table 7.3: Timing diagram

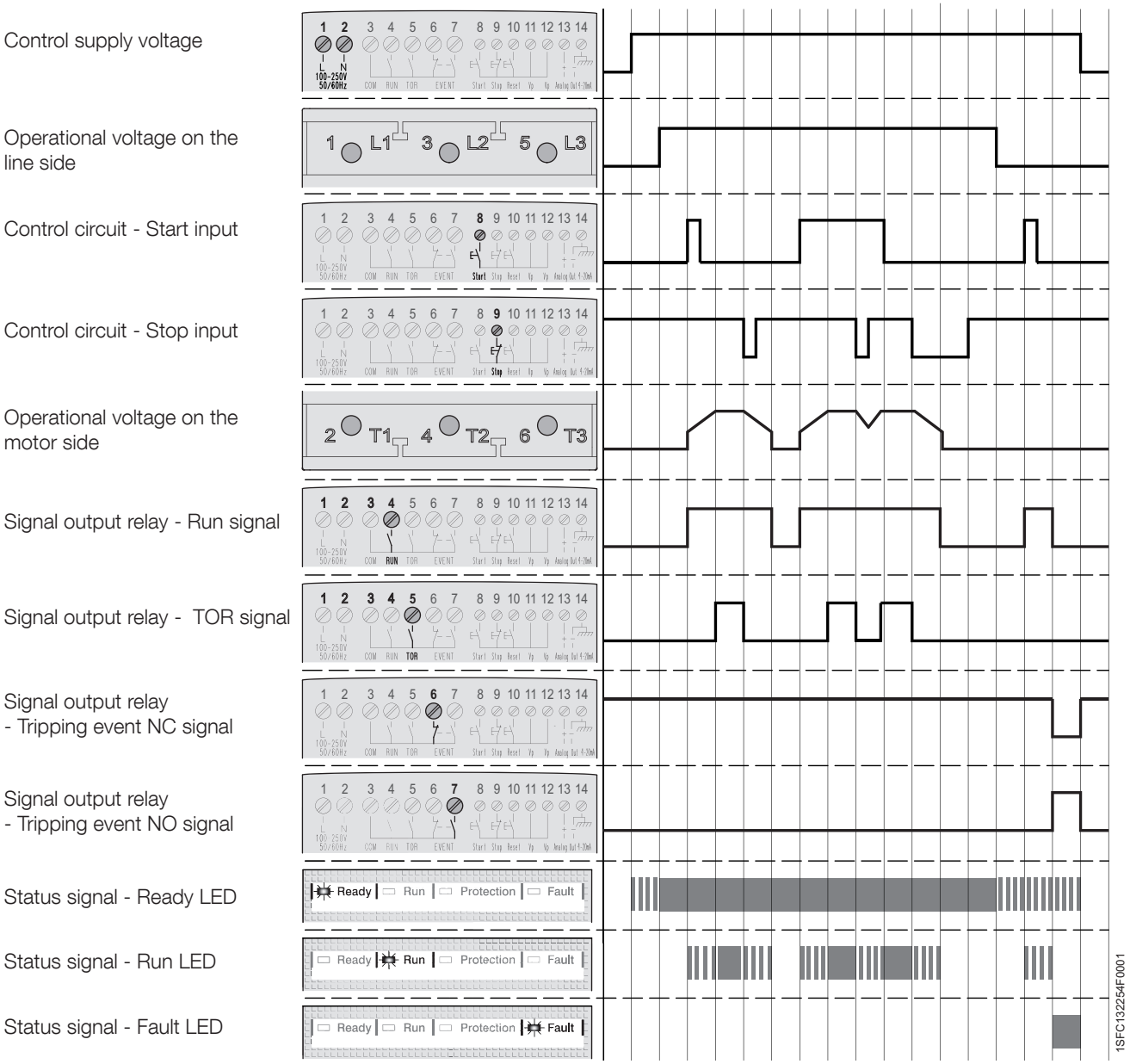

7.9 Application settings

In table 7.4 the recommended parameter settings for different applications are described.

Table 7.4: Application settings

	Recommended basic setting					
Centrifugal fan	10 s	OFF	40 %	5.0 x I_e	OFF	OFF
Axial fan	10 s	OFF	40 %	5.0 x I_e	OFF	OFF
Centrifugal pump	10 s	10 s	40 %	5.0 x I_e	OFF	On
High pressure pump	10 s	10 s	50 %	5.5 x I_e	OFF	On
Compressor	5 s	OFF	40 %	4.5 x I_e	OFF	OFF
Grinder	10 s	OFF	40 %	5.0 x I_e	OFF	OFF
Mixer	10 s	OFF	40 %	5.0 x I_e	OFF	OFF
Bow thruster	10 s	OFF	40 %	4.5 x I_e	OFF	OFF
Hydraulic pump	10 s	OFF	40 %	4.5 x I_e	OFF	OFF
Crusher	10 s	OFF	40 %	5.0 x I_e	OFF	OFF
Conveyor belt	10 s	OFF	50 %	5.0 x I_e	OFF	OFF
Escalator	10 s	OFF	40 %	4.5 x I_e	OFF	OFF
Lift/Elevator	10 s	OFF	40 %	4.5 x I_e	OFF	OFF
Cutter	10 s	OFF	40 %	5.0 x I_e	OFF	OFF
Band saw	10 s	OFF	40 %	5.0 x I_e	OFF	OFF
Circular saw	10 s	OFF	40 %	5.0 x I_e	OFF	OFF

Please note that the parameter values above are to be used as a guide only. Variations in load conditions may require additional tuning.

For Heavy Duty applications the Initial/End Voltage as well as the Current Limit might need to be increased.

This page is intentionally left blank.

Chapter 8 Fieldbus communication (option)

Overview 80
Required accessories 80
Instructions 80

Chapter 8 Fieldbus communication

8.1 Overview

The PSE Softstarter has an interface on the front for connecting the ABB Field-BusPlug used for fieldbus communication. Through this interface it is possible to control the softstarter, retreive status information, as well as upload and download of parameters.

The interface between the softstarter and the FieldBusPlug is independent of the fieldbus protocol used. Independent of softstarter size or delivery date it is possible to connect any of the available Fieldbus protocols later on, since this is defined in the FieldBusPlug itself.

The following Fieldbus protocols are available:
- DeviceNet
- CANopen
- Profibus
- Modbus

More information about the installation of fieldbus communication is available in chapter 7.5.12 FieldBus Control (optional hardware required).

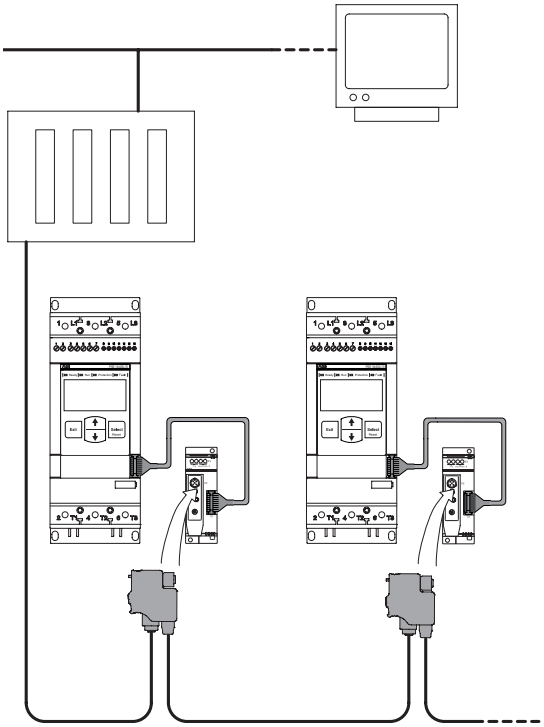

Figure 8.1: Principle of a fieldbus network with PSE Softstarters connected

8.1.1 Required accessories

To connect the PSE Softstarter to a fieldbus system, the following accessories are required:
- ABB FieldBusPlug Accessory FBPA
- ABB FieldBusPlug for present fieldbus protocol (check that the cable length is sufficient).
- Connectors for bus connection.
- End plug (some protocols).
- Software for PLC set-up.

8.1.2 Instructions

To do the set-up of input and output telegrams, parameter settings, instructions, etc. are available at: *www.abb.com/lowvoltage*:

• DeviceNet	1SFC132066M0201
• Profibus DP	1SFC132067M0201
• Modbus	1SFC132068M0201
• CANopen	1SFC132069M0201

Chapter 9 Maintenance

Regular maintenance 82
Service and repair 82

Chapter 9 Maintenance

This chapter describes the maintenance required for the PSE Softstarter. This product needs very little maintenance, but some components should be checked regularly.

Caution!

Do not open the softstarter or touch any live parts when the operational voltage and control supply voltage are connected. Due to the two phase control, a connected motor terminal always carries live hazardous voltage. Do not touch terminals when voltage is applied. Output terminals will have live voltage even when the device is OFF. This can cause death or serious injury.

9.1 Regular maintenance

- Check that all mounting bolts/screws are fastened. Tighten if necessary.
- Check that all connections of main, control- and supply circuits are fastened.
- Tighten the terminal screws and bolts on the connection bars, if necessary.
- Check that the cooling airways are free from dirt and dust. If required, use pressurized air to clean.
- Check external filters. Clean, if necessary.
- Check that the fan is working and rotating freely The blades shall rotate without any resistance. This can be checked at voltage free state.
- Check the Real Time Clock and adjust if necessary.
- In case of a fault, or if a fault can not be reset, see Chapter 10. Refer to the timing diagram for the basic functions of the softstarter.

9.2 Service and repair

In case the PSE Softstarter has to be repaired, a spare parts list and necessary instructions are available at: *www.abb.com/lowvoltage.* Select the link Control Products and then continue to Softstarters.

- Spare part list: 1SFC132062M0201
- Changing of HMI-module: 1SFC132063M0201
- Changing of Thyristor and By-pass relay/contactor: 1SFC132064M0201
- Changing of fans: 1SFC132065M0201

Service and repair should be performed by authorized personnel only. Note that unauthorized repair may affect the warranty.

In the event of a short circuit on the load side of a softstarter the device could be completely destroyed and possibly cause danger to personnel. By using a correctly rated short circuit protection device, i.e. a fuse or a circuit breaker, the damage will be limited to one of the following two categories, defined IEC 60947-4-2 and EN 60947-4-2:

Type 1: The softstarter might be damaged and some or all parts might need to be replaced. The case or enclosure must not be damaged or become live during the short circuit.
Type 2: The device should be operable after the event of a short circuit.

Chapter 10 Troubleshooting

General..... 84
Overview of indications..... 84
Tripping events..... 85
Start up problems and faults..... 86
General problems and faults..... 87
Fault indications..... 89
Protection indications..... 92
Failure indications..... 93

Chapter 10 Troubleshooting

10.1 General

This chapter is a guide that can be used in case problems should arise with the PSE Softstarter or the application.

The PSE Softstarter normally indicates a fault with LED Fault status indicator, and the LCD displays type of fault. When a protection is activated, it will be indicated with the LED protection status indicator, and the LCD displays what type of protection is active. More information about LEDs and LCD display is available in chapters 6.1.2.1 and 6.1.2.2.

Faults not displayed on the PSE Softstarter Human Machine Interface can also be found in this chapter.

10.2 Overview of indications

This table shows in which state the different indications for protections, faults, and failures may show up.

Table 10.1 Overview of indications for protections, faults and failures

				Motor control states							
			Event code	Stand by	At start command	At start ramp	At completed start ramp	TOR	At stop command	At stop ramp	At completed stop ramp
Protec-tions		Electronic Motor Overload Protection	P1	X	X	X	X	X	X	X	
		Underload Protection	P2					X ❹			
		Locked Rotor Protection	P3					X ❹			
Faults	Internal	Software faults	SF20	X	X	X	X	X	X	X	X
		Shunt fault	SF3x ❷	X	X						X
		By-pass open	SF4x ❷				X	X			
		Softstarter thermal overload	SF50		X	X	X	X	X	X	
	External	Phase loss	EF1x ❷		X	X	❶	❶	X	X	
		Bad Network quality	EF20		X	X			X	X	
		Current lost	EF3x ❷		X	X	X	X	X	X	
		Fieldbus fault	EF40		X	X	X	X	X	X	X
		Low supply voltage	EF50		X	X	X	X	X	X	X
		High current	EF6x ❷		X	X	X	X	X	X	X
Fail-ures		External keypad failures	Fy ❸	X	X		X	X	X		X

❶ Displayed as Current lost

❷ x = phase number, 4 indicates multiple or unknown phase

❸ y = failure number 1-8

❹ Activated after 30 s.

10.3 Tripping events

Depending on PSE Softstarter configuration, different events may be signalled on the LCD. All event codes are found in table 10.2: Event list.

Table 10.2: Event list

Event code	Event description	Cause
SF20	Software fault	Fault in software
SF3x ❶	Shunt fault	By-pass relay/contactor does not open or thyristor short circuit
SF4x ❶	By-pass open	By-pass relay or by-pass contactor does not close or opens
SF50	Softstarter thermal overload	Thyristors overheated
EF1x ❶	Phase loss fault	Power loss on operational current on one or several phases
EF20	Bad network quality	Excessive disturbances in the operational supply network
EF3x ❶	Current lost fault	Operational current on one or several phases lost
EF40	Fieldbus fault	Fault on Fieldbus communication
EF50	Low supply voltage	Voltage too low or briefly interrupted in control supply network for softstarter
EF6x ❶	High current fault	Operational current higher than 8 x I_e
P1	Motor overload protection	Load on motor higher than motor rating and corresponding selected EOL Class. Current limit parameter is set on a too low value.
P2	Underload protection	Load on motor too low
P3	Locked rotor protection	Load on motor too high for a short time

SF = Softstarter fault
EF = External fault
P = Protection

❶ *x = phase number, 4 indicates multiple or unknown phase*

10.4 Start up problems and faults

Status	Possible cause	Solution
LED's not lighting and LCD is blank. 	Control supply voltage U_S is not connected.	• Connect according to a circuit diagram. See Chapter 5 Connection and Chapter 11 Wiring diagrams.
Green Ready LED steady lighting or flashing, and LCD faint. 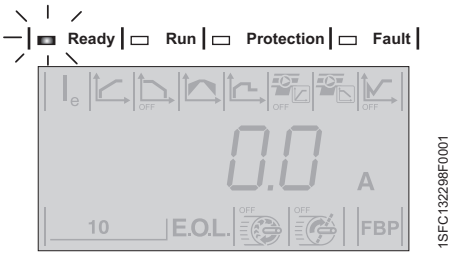	LCD display backlight auto shut off.	• Touch any key on the keypad.

10.5 General problems and faults

Status	Possible cause	Solution
Motor humming/starts without given start signal.	By-pass relay closed, due to abnormal handling. (PSE18...PSE170 only).	• Switch off operational voltage and control supply voltage. Switch on voltage in correct succession. 1. Control supply voltage on terminals 1 and 2. See chapter 5.2.4. 2. Wait 4 seconds, and then switching on operational voltage on terminals L1, L2 and L3. See chapter 5.2.3. • If same fault remains, contact your ABB Sales Office.
	By-pass contactor/relay stuck in closed position.	• Check and replace relay or contactor. • If same fault remains, contact your ABB Sales Office.
	Shorted thyristor.	• Check and replace thyristor. Contact your ABB Sales Office.
	The motor connection is not correct. (Must be connected In Line).	• Check and correct the wiring. Connect the control supply voltage according to a circuit diagram. See Chapter 5 and Chapter 11. Connecting Inside Delta not allowed.
Bad motor sound during start and operation.	The motor connection is not correct. (Must be connected In Line).	• Check and correct the wiring. Connect the control supply voltage according to a circuit diagram. See Chapter 5 and Chapter 11. Connecting Inside Delta not allowed.
	Incorrect ramp time for start.	• Try different ramp times (some adjustments can be necessary for best result). See chapter 7.5.2.
	Incorrect Initial/End Voltage.	• Try different settings for the parameter Initial /End Voltage. See chapter 7.5.4, or contact your ABB Sales Office.
	Incorrect current limit.	• Try different settings for the parameter Current Limit. See chapter 7.5.5, or contact your ABB Sales Office.
	The motor is too small. (current is out of measuring range).	• Check that the softstarter corresponds to the motor size.
Bad motor sound during stop.	Incorrect ramp time for stop.	• Try different ramp times for stop (some adjustments can be necessary for best result). See chapter 7.5.3.
	Incorrect Initial/End Voltage.	• Try different settings for the parameter Initial /End Voltage. See chapter 7.5.4, or contact your ABB Sales Office.
	Start and stop command given at the same time.	• Check that start and stop command is not given at the same time.
Motor does not start when giving start command using hardwire inputs.	Control wiring not correct.	• Check connection for start and stop. See chapter 5.2.4.3.
	Start and stop command given at the same time.	• Check that start and stop command is not given at the same time.

Status	Possible cause	Solution
Displayed current in LCD is not stable.	The motor is too small. (current is out of measuring range).	• Check that the softstarter corresponds to the motor size.
Motor does not start with fieldbus	Softstarter has tripped on fault or protection.	• Perform a reset on any active event. See chapter 6.1.5 Reset of tripping events.
	Softstarter is in Local Mode.	• Check that the Auto Mode bit of the binary output telegram setting is 1. • Check that the Local Mode digital input on the FieldBusPlug accessory is set to Remote.
	Fieldbus Operation When Fault parameter is set to LocC.	• If the parameter Fieldbus Operation When Fault is set to LocC, there will be a 10 second delay before it is possible to re-start after communication is reestablished.
Digital or binary signals incorrect.	PLC configuration incorrect.	• Check PLC configuration.
Loading of parameters with fieldbus does not work properly.	Fieldbus settings	• Verify that parameters are matching between the PLC and the softstarter fieldbus documentation for the fieldbus protocol used. • Verify that fieldbus Download Parameter is set to dPon. • Ensure that block-parameters are enabled.

10.6 Fault indications

Status	Possible cause	Solution
Software fault Red Fault LED steady lighting or flashing, and LCD event code SF20. See chapter 6.1.2.1 about LED status indicators activation for faults and protections. 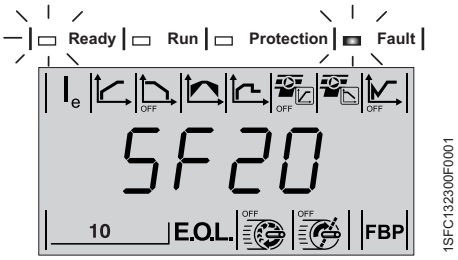 	Fault in software.	• Disconnect and reconnect the control supply voltage (U_S) and make a restart. See chapter 5.2.4. • If same fault remains, contact your ABB Sales Office.
	PSE parameter fault.	• Check parameter PSE and select correct setting corresponding to the type of PSE Softstarter. See chapter 7.7.2.
Shunt fault Red Fault LED steady lighting, and LCD event code SF3x ❶. See chapter 6.1.2.1 about LED status indicators activation for faults and protections. 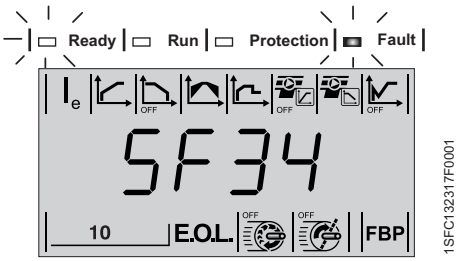 	By-pass relays closed after transport, (PSE18...PSE170 only).	• Switch off operational voltage and control supply voltage. Switch on voltage in correct succession. 1. Control supply voltage on terminals 1 and 2. See chapter 5.2.4. 2. Wait 4 seconds, and then switching on operational voltage on terminals L1, L2 and L3. See chapter 5.2.3.
	The by-pass contactor's/relays are not opening.	• Check and replace relay. Contact your ABB Sales Office for replacement kit.
	Thyristors short circuit.	• Check and replace thyristor. Contact your ABB Sales Office for replacement kit.
By-pass open Red Fault LED steady lighting, and LCD event code SF4x ❶. See chapter 6.1.2.1 about LED status indicators activation for faults and protections. 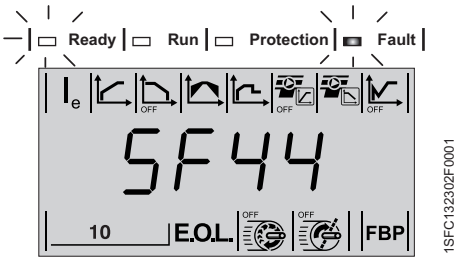 	Power loss on control supply circuit.	• Check control supply voltage
	By-pass relays/contactor's open or by-pass relays/contactor's do not close.	• Check and replace by-pass relay/contactor. Contact your ABB Sales Office for replacement kit.
Softstarter thermal overload Red Fault LED steady lighting, and LCD event code SF50. See chapter 6.1.2.1 about LED status indicators activation for faults and protections. 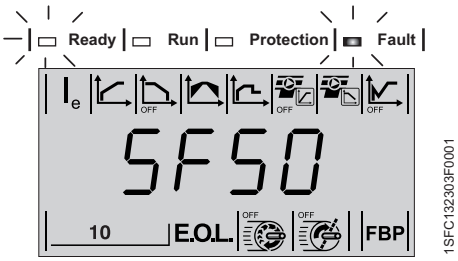 	Thyristors overheated. If the fault remains after reset, the heat sink temperature is too high.	• Check that the fans are working in a proper way. See chapter 9.1. • Check that the cooling airways are free from dirt and dust. See chapter 9.1. • Check that the ambient temperature is not too high. Derating is required above 40°C (104 °F). See chapter 3.6. • Check that the mounting angle is not more than 30 °. See chapter 4.2.4. • Check that PSE Softstarter not is too small for the number of starts and stops performed each hour.

SF = Softstarter fault
EF = External fault
P = Protection

❶ *x = phase number, 4 indicates multiple or unknown phase*

Status	Possible cause	Solution
Phase loss fault Red Fault LED steady lighting, and LCD event code EF1x ❶. See chapter 6.1.2.1 about LED status indicators activation for faults and protections. 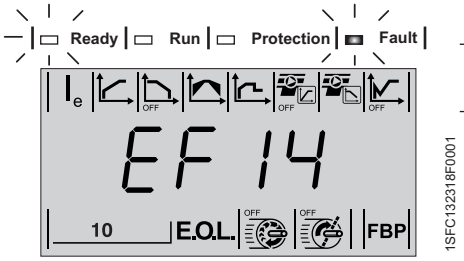 	Fuse blown.	• Check and replace fuses in all three phases.
	Power loss on operational current on one or several phases.	• Check and correct supplying operational network.
	The main contactor or circuit breaker is open.	• Check and close contactor/breaker or any external switching device.
	Main contactor opens too quickly at stop.	• Control main contactor with Run signal relay on terminal 4. See chapter 5.2.4.6. • Add a time relay before contactor opening. • If Stop Ramp not is needed, set Stop Ramp Time to 0.
Bad network quality Red Fault LED steady lighting, and LCD event code EF20. See chapter 6.1.2.1 about LED status indicators activation for faults and protections. 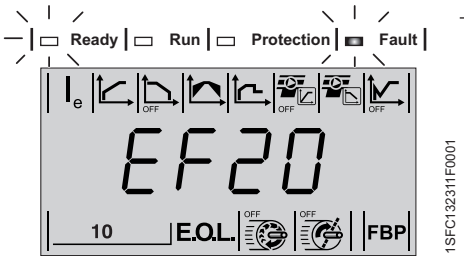 	Excessive disturbances in the operational supplying network.	• Check and correct supplying operational network.
	Short power loss on all three phases in the operational network.	• Check and correct supplying operational network.
Current lost fault Red Fault LED steady lighting, and LCD event code EF3x ❶. See chapter 6.1.2.1 about LED status indicators activation for faults and protections. 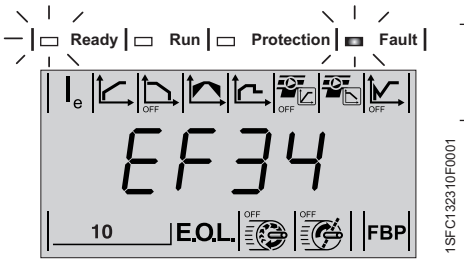 	Operational current too low or lost on one or several phases.	• Check and correct supplying network
	Phase loss on line side or motor side.	• Check and correct supplying network • See Phase loss EF14.
	Thyristors not able to conduct	• Check and replace PCB/thyristor. Contact your ABB Sales Office for replacement kit.
	The motor is too small. (current is out of measuring range).	• Check that the softstarter corresponds to the motor size.

SF = Softstarter fault
EF = External fault
P = Protection

❶ *x = phase number, 4 indicates multiple or unknown phase*

Status	Possible cause	Solution
Fieldbus fault Red Fault LED steady lighting, and LCD event code EF40. See chapter 6.1.2.1 about LED status indicators activation for faults and protections. 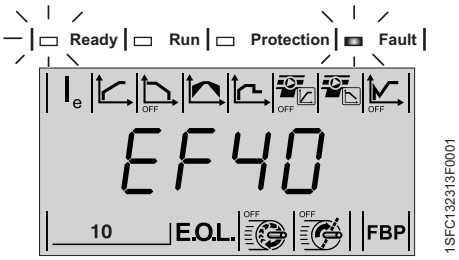 	Fault on fieldbus connection or FieldBusPlug Accessory.	• Check that the correct type of FieldBusPlug accessory is used. See Chapter 8 or contact your ABB Sales Office. • Check that the connection of the FieldBusPlug is correct. See chapter 3.2. • Check the connection of the fieldbus accessory. • Perform a reset on any active event. See chapter 6.1.5 Reset of tripping events.
	Fieldbus communication is not working.	• Check that the correct type of FieldBusPlug accessory is used. See Chapter 8 or contact your ABB Sales Office. • Check that the connection of the FieldBusPlug is correct. See chapter 3.2. • Check the connection of the fieldbus accessory. • Check PLC configuration. • Possible Fieldbus fault.
	PLC is not running.	• Put PLC in run mode. • Check PLC configuration.
	Fieldbus Control is enabled on a non-fieldbus application.	• Set Fieldbus Control parameter to OFF.
Low supply voltage Red Fault LED steady lighting, and LCD event code EF50. See chapter 6.1.2.1 about LED status indicators activation for faults and protections. 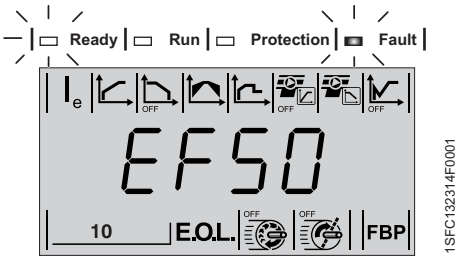 	The control supply voltage is too low on terminals 1 and 2.	• Check and correct control supply voltage.
	Short power loss on the control supply network.	• Check control supply network for short interruptions.
High current fault Red Fault LED steady lighting, and LCD event code EF6x ❶. See chapter 6.1.2.1 about LED status indicators activation for faults and protections. 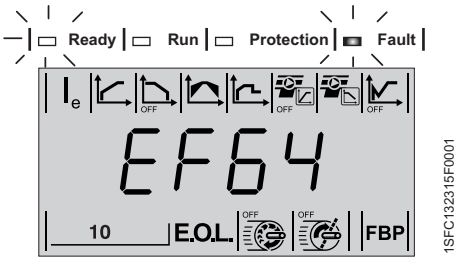 	Operational current higher than 8 x I_e.	• Check if the motor is locked or running stiff. • Check the bearings in the motor and connected equipment. • Check if the load on the motor is too heavy. • Check isolation on the motor windings. • Replace the motor.

SF = Softstarter fault
EF = External fault
P = Protection

❶ *x = phase number, 4 indicates multiple or unknown phase*

10.7 Protection indications

Status	Possible cause	Solution
Motor Overload Protection (EOL) Red Fault LED steady lighting, and LCD event code P1. See chapter 6.1.2.1 about LED status indicators activation for faults and protections. Remark that time delay for reset can be long depending on temperature. 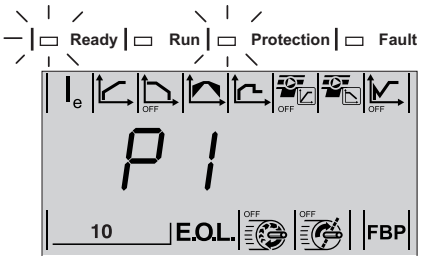 1SFC132320F0001	Load on motor higher than motor rating and corresponding selected EOL Class.	**At start** • Check and correct the reason for the overload. • Increase Initial/End Voltage. • Check the motor rating plate for I_e. • Increase Current Limit. • Make Start Ramp Time shorter.
	Too many starts and stops during a short time.	**At start** • Chose a motor with more power, and a softstarter rated for higher current. • Check and correct the reason for the overload. • Check that the ramp time for start not is too long. • Check that correct EOL Class is used.
	The motor has been exposed to an overload condition because the current over a certain time is too high. (The load on the motor shaft is too high).	**Continuous run** • Check the rating of the plate for I_e. • Check operational voltage. • Chose a motor with more power, and a softstarter rated for higher current. • Check and correct the reason for the overload. • Check that correct EOL Class is used.
Underload Protection Red Fault LED steady lighting, and LCD event code P2. See chapter 6.1.2.1 about LED status indicators activation for faults and protections. 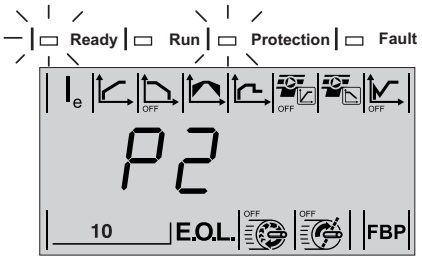 1SFC132316F0001	The motor current is below set level and time.	• Check and correct the reason for the underload. • Check that the setting I_e are according to the operation conditions. See chapter 7.5.1. • Check that the Underload Protection parameter is set according to operational conditions. Se chapter 7.5.10.
Locked Rotor Protection Red Fault LED steady lighting, and LCD event code P3. See chapter 6.1.2.1 about LED status indicators activation for faults and protections. 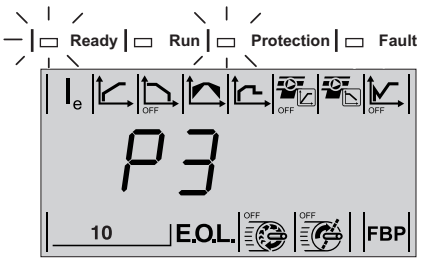 1SFC132322F0001	The motor is running stiff for some reason. A damaged bearing or a stuck load could be possible causes.	• Check the bearings of the motor and load.
	Decrease in operational voltage can give a higher operational current.	• Check voltage.

10.8 Failure indications

Status	Possible cause	Solution
Transfer of parameters failed Only showing on external keypad. Can occur for transfer both from the PSE and to the PSE. Same failure for F1, F2, F3, F4 and F6. 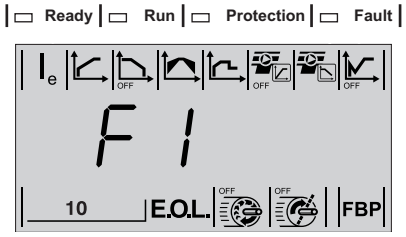 	Fault in software.	• Try again. • If the same failure remains, contact your local ABB Sales Office.
Transfer of parameters failed Only showing on external keypad. Can occur for transfer to the PSE. 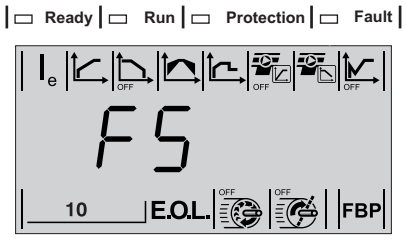 	No parameters stored in the PSEEK.	• Load the parameters that you want to transfer from selected PSE. • If the same failure remains, contact your local ABB Sales Office.
All parameters was not transferred Only showing on external keypad. Can occur for transfer both from the PSE and to the PSE. 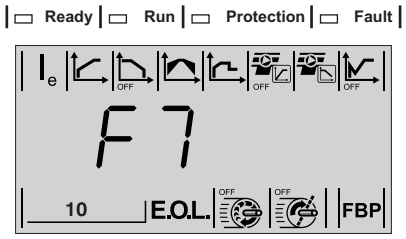 	Fault in software.	• Try again. • If the same failure remains, contact your local ABB Sales Office.
Transfer of parameters failed Only showing on external keypad. Can occur for transfer to the PSE. 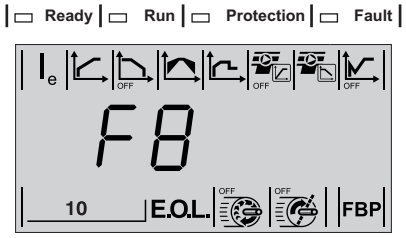 	Not possible to transfer parameters to PSE when it is in TOR.	• Return the PSE to idle state and try again • If the same failure remains, contact your local ABB Sales Office.

This page is intentionally left blank.

Chapter 11 Wiring diagrams

Circuit diagram PSE18...PSE370 (Fuse and contactor version)..... 96
Circuit diagram PSE18...PSE370 (MCCB version)..... 97

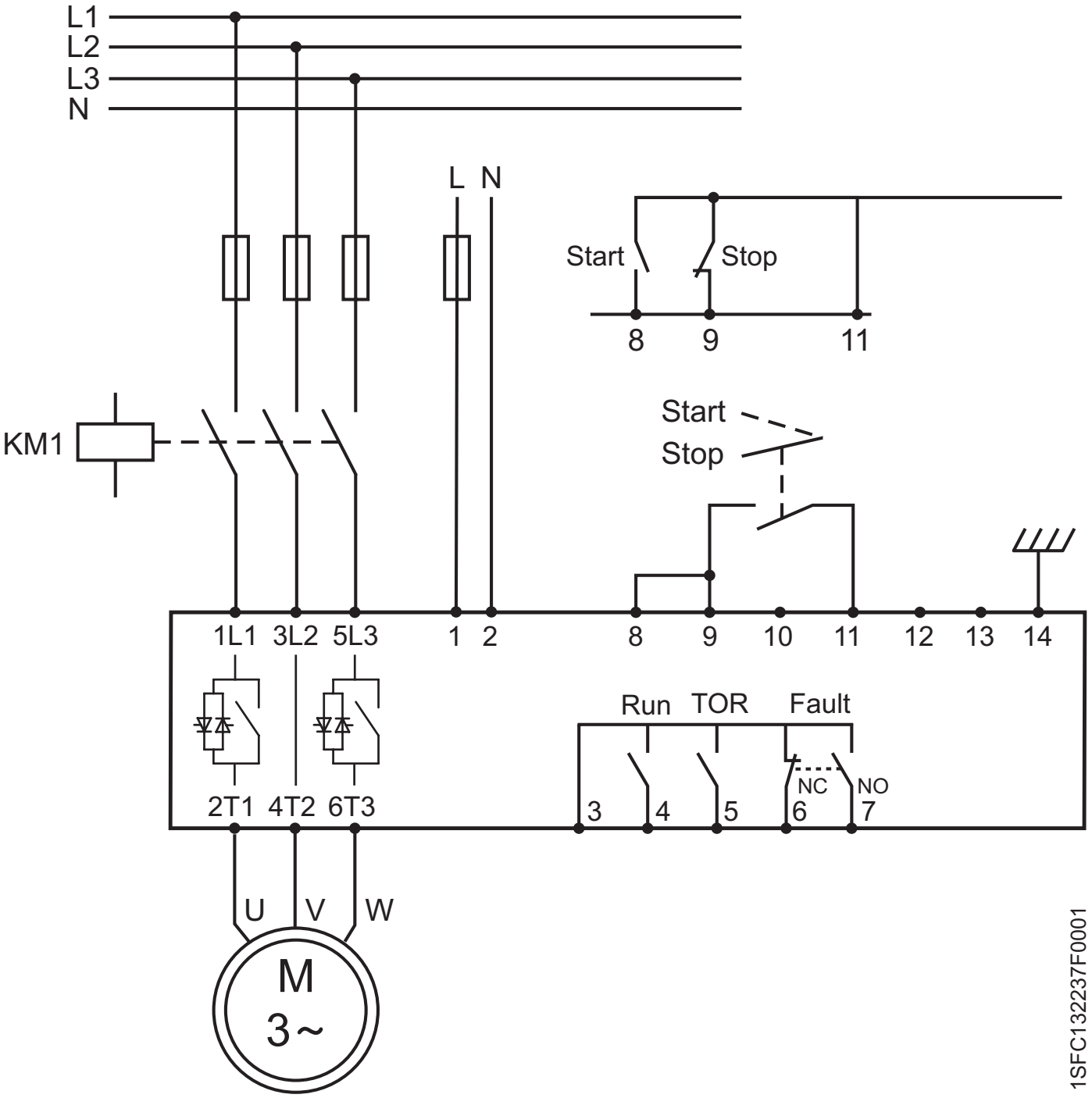

Circuit diagram PSE18...PSE370 (Fuse and contactor version)

The earthing is not a protective earth, it is a functional earth. The earthing cable should be as short as possible. Maximum length 0.5 m. The earthing cable should be connected to the mounting plate, which should also be earthed.

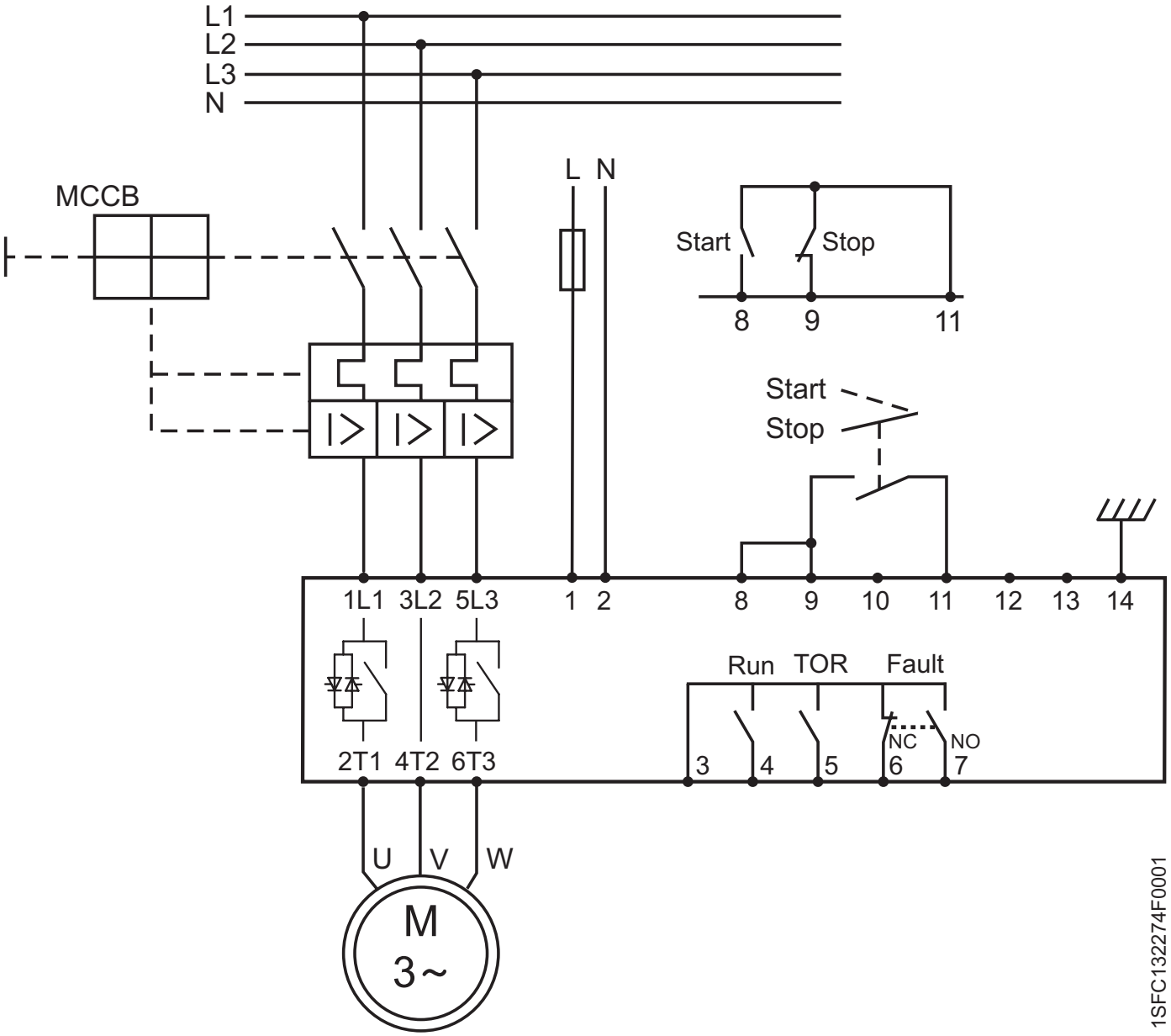

Circuit diagram PSE18...PSE370 (MCCB version)

The earthing is not a protective earth, it is a functional earth. The earthing cable should be as short as possible. Maximum length 0.5 m. The earthing cable should be connected to the mounting plate, which should also be earthed.

This page is intentionally left blank.

Chapter 12 Index

A
Abbreviations 10
Acronyms 10
Active 68, 71, 84, 88, 91
Airways 30, 82, 89
All settings 48, 49, 51, 60, 74
Altitude 16, 18
Analog out 13, 19, 39
  Range 39
Analog output 39
Application setting 13, 77
Axial fan 77

B
Bad network quality 84, 85, 90
Basic settings 59
By-pass 10, 12, 16, 33, 82, 84, 85, 87, 89
By-pass doesn't close 85, 87
By-pass open 84, 85, 89
By-pass relays 12, 33, 89

C
Centrifugal Fan 77
Centrifugal Pump 77
Circuit diagram 32, 33, 34, 86, 87, 96, 97
Communication devices 8, 32, 41, 46, 56
  Connection 32, 41
  Fieldbus 16, 17, 46, 51, 56, 70, 71, 72, 73, 74, 80, 85, 91
Communication protocols 19
Compressor 77
Configuration 12, 13, 48, 56, 59, 70, 85, 88, 91
Connection 12, 17, 28, 32, 33, 34, 35, 36, 37, 38, 39, 40, 41, 42, 80, 82, 86, 87, 91
Control circuit 10, 13, 17, 35, 76
  Connection 17, 35, 37
  Earthing 36
  Start and Stop 37
Control supply voltage 10, 12, 13, 16, 18, 19, 33, 35, 37, 47, 76, 82, 86, 87, 89
Conventional circuit 37
Conveyor (belt) 66, 77
Cooling 16, 19, 30, 82, 89
Cooling system 16, 19, 30, 82, 89
CosPhi 51, 56
Current 10, 12, 13, 18, 20, 21, 22, 32, 34, 42, 46, 50, 52, 56, 57, 59, 60, 61, 63, 66, 68, 69, 77, 87, 88, 92
Current Limit 22, 51, 56, 57, 59, 63, 66, 77, 85, 87, 92

D
Default values 51, 56, 58, 60, 74
DeviceNet 19, 80
Dimensions 23, 24, 25, 26, 29, 34
Display at start up 46, 84
Document ID 8
Document number 3
Download of parameters 58, 71, 80
Download Parameter 58, 71, 88
Drilling plan 25, 26

E
Earthing 36
  Connection 36
  Electrical connection 36
  Start and stop terminals 37
  Supply voltage and control circuit 35
Electronic Motor Overload Protection 51, 57, 67, 84, 85, 92
  Class 51, 57, 59, 67, 85, 92
  Type of operation 57, 67
EMC Class 19
Enclosure sizes 29
Environmental influence 18
EOL 10, 51, 57, 59, 67, 84, 85, 92
Event 12, 38, 40, 46, 47, 48, 49, 56, 70, 72, 73, 74, 76, 82, 84, 85, 88, 89, 90, 91, 92
Event relay 40
External keypad 17, 41, 42, 56, 57, 58, 73
  Download of parameters 41, 42, 57, 58, 70, 71, 80, 88
  Fault indication 93
  Transfer of parameters 41, 42, 57, 58
  Upload of parameters 41, 42, 57, 58, 80

F
Fans 16, 19, 77, 82, 89
Fault 21, 22, 40, 41, 42, 47, 58, 70, 72, 73, 82, 84, 87, 88, 89, 90, 91, 92
Fault indication 46, 47, 84, 89, 93
Faults 84, 86, 87, 89, 90, 91, 92
Fieldbus 10, 16, 17, 46, 51, 56, 58, 70, 71, 72, 73, 74, 80, 84, 85, 88, 91
  Address 58, 70, 71
  Communication 16, 46, 56, 70, 71, 73, 80, 85, 88, 91
  Connection 17, 80, 91
  Control 51, 56, 58, 70, 71, 72, 74, 80, 91
  Fault 70, 72, 73, 84, 85, 91
  Plug 10, 58, 70, 71, 80, 88, 91
  Type 80
  Type of operation 58, 70, 73
Frequency 18, 19
Full-On 10
Full voltage 10, 40, 60, 61, 62, 64, 69
Functional earth 13, 36, 96, 97
Functions 46, 56, 60, 74, 76, 82
Fuse 19, 21, 22, 82, 90, 96

H
Hardwire 16, 56, 58, 70, 72, 73, 74, 87
Hardwire inputs control 16, 87
High current 84, 85, 91
HMI 10, 46, 47, 48, 49, 50, 51, 52, 57, 58, 82
Holding circuit 37
Human-Machine Interface 10, 46, 47, 48, 49, 50, 51, 52
Humidity 18

I
Ie 10, 13, 20, 39, 42, 50, 51, 52, 57, 59, 60, 63, 68, 69, 77, 85, 91, 92
IEC 10, 17, 18, 19, 21, 29, 41, 82
Information level 46, 49, 50, 51, 52, 56, 59, 74, 75
Initial/End voltage 51, 57, 59, 62, 77, 87, 92
In Line 12, 33, 59, 60, 87
Inputs 16, 19, 87
Internal control supply voltage 37

K
Keypad 16, 17, 41, 42, 46, 48, 49, 52, 56, 57, 58, 71, 73, 86
  Locking 49
  Status 46, 47
  Status indicators 46, 47
  Unlocking 49
Kick Start 51, 57, 66
  Level 66

L
LCD 10, 12, 41, 42, 46, 47, 48, 74, 75, 84, 85, 86, 88, 89, 90, 91, 92
  LCD backlight 12, 46, 50, 52, 86
  LCD display automatic switch off 46
LED 10, 12, 13, 41, 46, 47, 76, 84, 86, 89, 90, 91, 92
Level 12, 51, 59, 69
  Altitude 16, 18
  Current level 63
  Information level 46, 49, 50, 51, 52, 56, 59, 74, 75
  Kick Start 66
  Locked Rotor Protection 58, 69
  Menu level 12, 42, 46, 48, 50, 52
  Settings level 42, 50, 51, 52, 59
  Underload Protection 51, 58, 68
  Voltage level 13, 60, 61, 62, 64, 66
Locked Rotor Protection 16, 51, 58, 68, 69, 84, 85, 92
  Level 51, 58, 69
  Type of operation 58

M
Maintenance 9, 82
Markings 17
MCCB 21, 22, 97
Menu, description 46, 47, 48, 49, 50, 51, 52, 53
Menu tree 51
Minimum distance to wall/front 30
Minimum enclosure size 29
Mixer 77
Modbus 19, 80
Motor overload protection 51, 57, 67, 84, 85
  Tripping class 51, 57, 59, 67
  Type of operation 51, 57, 67
Motor side terminals 17, 34
Motor sound 87
Motor underload protection 51, 58, 68, 84, 85, 92
  Level 58, 68
  Type of operation 58, 68
Mounting 12, 13, 28, 29, 30, 32, 36, 41, 82, 89, 96, 97

N
Navigation keys 12, 46, 48, 49, 50, 52, 59
Non closing by-pass contactor 12, 85, 87
  By-pass open 12, 84, 85, 89
Non opening by-pass contactor 85, 89

O
Operational circuit 18, 19
  Connection 34
Operational supply voltage 12, 33
Output relays 13, 40
Overview 16, 46, 80, 84

P

Parameter 12, 13, 39, 46, 48, 49, 50, 52, 56, 57, 60, 61, 62, 64, 65, 66, 67, 69, 70, 71, 72, 73, 74, 75, 80
Basic settings 59
Download of parameters 42, 58, 71, 80
List of available parameters 57, 58
Reset 12, 46, 49, 51, 56, 70, 71, 74
Reset of all settings 49, 51
Settings 49, 51, 56, 59, 60, 61, 62, 63, 64, 65, 66, 67, 68, 69, 70, 71, 72, 73, 77
Transfer of parameters 41, 42, 57, 58, 80
Upload of parameters 41, 42, 57, 58, 80
Phase L1 12, 16, 32, 34, 87, 89, 96, 97
Phase L2 12, 16, 32, 34, 87, 89, 96, 97
Phase L3 12, 16, 32, 34, 87, 89, 96, 97
Phase loss 84, 85, 90
P hp 20
P kW 20
PLC 10, 40, 58, 70, 71, 80, 88, 91
Pollution degree 18
Profibus DP 80
Protection 10, 12, 16, 18, 36, 40, 41, 46, 47, 48, 49, 51, 57, 58, 67, 68, 69, 74, 75, 82, 84, 85, 86, 88, 89, 90, 91, 92
Type of operation 57, 58, 67, 68, 69, 70, 73
PSE parameter 75, 89

Q
Quickstart 8, 12, 13

R
Real time clock 82
Relay 12, 13, 33, 37, 40, 76, 82, 85, 87, 89, 90
Requirements 9, 20, 29
Reset all settings 49, 74

S
Selection key 13, 42, 50, 52, 59
Semiconductor fuse 21
Setting current Ie 10, 50, 52, 59
Settings 12, 42, 48, 49, 50, 51, 52, 56, 60, 66, 70, 74, 77, 80, 87
Settings level 50, 51, 52
Settings menu 50
Shorted SCR 87
Shunt fault 84, 85, 89
Softstarter Thermal Overload 84, 85, 89
Softstarter types 20
Specifications 16, 18, 30
Start 16, 32
Start and Stop 8, 12, 13, 16, 19, 37, 40, 47, 51, 57, 59, 60, 62, 63, 64, 67, 68, 69, 70, 73, 74, 75, 76, 84, 86, 87, 88, 92
Connection 12, 17, 28, 32, 33, 34, 35, 36, 37, 38, 39, 40, 41, 80, 82, 86, 87, 91
Start Ramp Time 51, 57, 59, 60, 64, 92
Start up faults 86
Circuits, connection 12, 13, 17, 31, 80, 82, 96, 97
Status information 46, 80
Stop Ramp Time 51, 57, 59, 61, 65, 90
Storage 18, 28, 41

T
Technical data 17, 19, 41
Temperature 10, 12, 16, 18, 41, 67, 89, 92
Thermistor 16
Thyristor 10, 12, 16, 34, 82, 85, 87, 89, 90
Timing diagram 76
Shunt fault TOR 10, 12, 32, 40, 60, 61, 62, 96, 97
Torque 16, 34, 35, 36, 37, 38, 39, 40, 51, 60, 61, 64, 65, 66
Torque Control 16, 51, 57, 60, 61, 64, 65
Transfer of parameters 41, 42, 57, 58, 80
Tripping event 12, 48, 49, 72, 73, 76, 85
Troubleshooting 84
Two phase control 32, 37, 40, 46, 47, 56, 57, 59, 60, 62, 63, 64, 66, 70, 75, 82
Type designation 16, 18
Type of operation 57, 58, 67, 68, 69, 70, 73

U
Uc 10
Ue 10
Underload 16, 51, 58, 68, 84, 85, 92
Protection 58, 68, 84, 85, 92
Type of operation 58, 68
Unlocking the keypad 49
Unpacking 28
Upload of parameters 41, 42, 57, 58, 80
Us 10

W
Warning 4, 12, 13, 16, 28, 29, 30, 32, 33, 34, 37, 38, 39, 40, 84
Warning high current 84, 85, 91
Warning (tripping events) 85
Weights 19
Wire diagrams 96, 97

This page is intentionally left blank.

Customer feedback report

ABB would appreciate your comments on this product. Please grade the following questions by selecting one alternative per category. Your answer will enables us to improve our products.

Product:

How do you grade the quality of the product?

	Excellent			Poor
Total impression	☐	☐	☐	☐
Usability	☐	☐	☐	☐
Functionality	☐	☐	☐	☐
Human-machine interface	☐	☐	☐	☐

Comments:_____

_____

_____

How do you grade the quality of the documentation?

	Excellent			Poor
Total impression	☐	☐	☐	☐
Layout	☐	☐	☐	☐
Illustrations	☐	☐	☐	☐
Readabillity	☐	☐	☐	☐
Easy to find	☐	☐	☐	☐
Content structure	☐	☐	☐	☐

Comments:_____

_____

_____

Remove from binder

Suggestions for improvements:

Remove from binder

Please send this report to:

ABB AB
Cewe-Control
SE-721 61 Västerås
Sweden

Contact us

ABB AB
Cewe-Control
SE-721 61 Västerås, Sweden
Telephone: +46 (0) 21 32 07 00
Telefax: + 46 (0) 21 12 60 01

http://www.abb.com/lowvoltage

© Copyright 2012 ABB. All rights reserved.
Specifications subject to changes without notice.

Manual 1SFC132057M0201 rev E, January 2012

Power and productivity
for a better world™