Low Voltage
General Purpose Motors

ABB

Making you more competitive

ABB's General purpose motor is designed for use in general industry, meeting the demands of standard applications for OEM's. Motors are readily available from central stock locations and distributors around the world. The motors have high build quality, are available with all the features needed by the OEM market and can be modified to meet most specifications.

ABB (www.abb.com) is a leader in power and automation technologies that enable utility and industry customers to improve performance while lowering environmental impacts. The ABB Group of companies operates in around 100 countries and employs around 103,000 people.

Low Voltage General Purpose Motors

Sizes 56 to 400, from 0.055 to 630 kW

Contents | Page

1	General information	4
2	Aluminum motors	11
3	Steel motors	81
4	Cast iron motors	113
5	Open drip proof motors	147
6	Global motors	167
7	Brake motors	193
8	Single phase motors	219
9	Integral motors	237

ABB reserves the right to change the design, technical specification and dimensions without prior notice.

General information

Standards

ABB motors are of the totally enclosed and open drip proof, single or three phase squirrel cage type, built to comply with international IEC and EN standards. Motors conforming to other national and international specifications are also available on request.

All production units are certified to ISO 9001 international quality standard as well ISO 14000 environmental standard and confirm to all applicable EU Directives.

IEC / EN

Electrical	Mechanical
IEC/EN 60034-1	IEC 60072
IEC/EN 60034-2	IEC/EN 60034-5
IEC 60034-8	IEC/EN 60034-6
IEC 60034-12	IEC/EN 60034-7
	IEC/EN 60034-9
	IEC 60034-14

Motors for EU motor efficiency levels

A Europe-wide agreement will ensure that the efficiency levels of electric motors manufactured in Europe are clearly displayed. In contrast to the American legislation on motor efficiency the European agreement does not establish mandatory efficiency levels.

It basically establishes three classes giving motor manufacturers an incentive to qualify for a higher class.

ABB is one of only a handful of leading motor manufacturers in Europe to have a motor range to meet or exceed the minimum efficiencies stated in the highest level of the EU agreement of LV motors.

These efficiency levels apply to 2- and 4-pole, three phase squirrel cage induction motors rated for 400V, 50Hz with S1 duty class with the output 1.1 to 90 kW, which account for the largest volume on the market.

The efficiency of motors from different manufacturers are collated in a database, EURODEEM, published by the European Commission. It is accessible over the Internet at http://iamest.jrc.it/projects/eem/eurodeem.htm.

1

EU efficiency classes for 2-pole motors

Output kW	2-pole Boarderline EFF2/EFF3	EFF1/EFF2
1.1	76.2	82.8
1.5	78.5	84.1
2.2	81.0	85.6
3	82.6	86.7
4	84.2	87.6
5.5	85.7	88.6
7.5	87.0	89.5
11	88.4	90.5
15	89.4	91.3
18.5	90.0	91.8
22	90.5	92.2
30	91.4	92.9
37	92.0	93.3
45	92.5	93.7
55	93.0	94.0
75	93.6	94.6
90	93.9	95.0

ABB Three phase induction motors, 400 V 50 Hz - EU motor efficiency levels

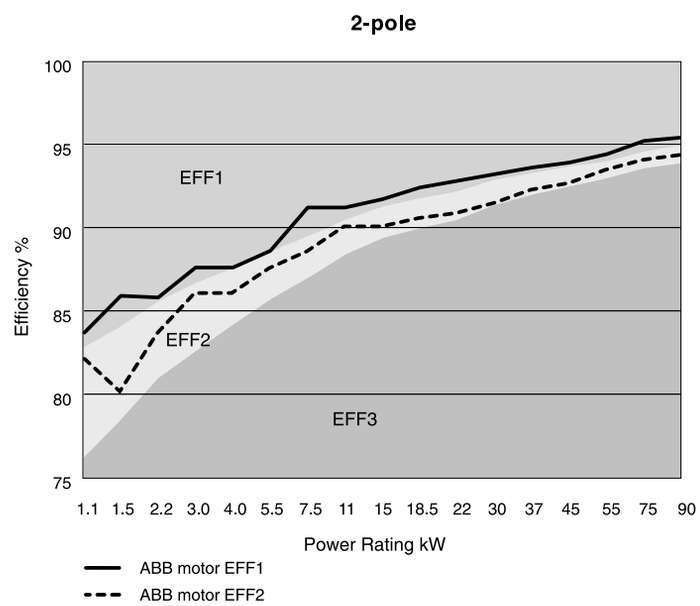

EU efficiency classes for 4-pole motors

Output kW	4-pole Boarderline EFF2/EFF3	EFF1/EFF2
1.1	76.2	83.8
1.5	78.5	85.0
2.2	81.0	86.4
3	82.6	87.4
4	84.2	88.3
5.5	85.7	89.2
7.5	87.0	90.1
11	88.4	91.0
15	89.4	91.8
18.5	90.0	92.2
22	90.5	92.6
30	91.4	93.2
37	92.0	93.6
45	92.5	93.9
55	93.0	94.2
75	93.6	94.7
90	93.9	95.0

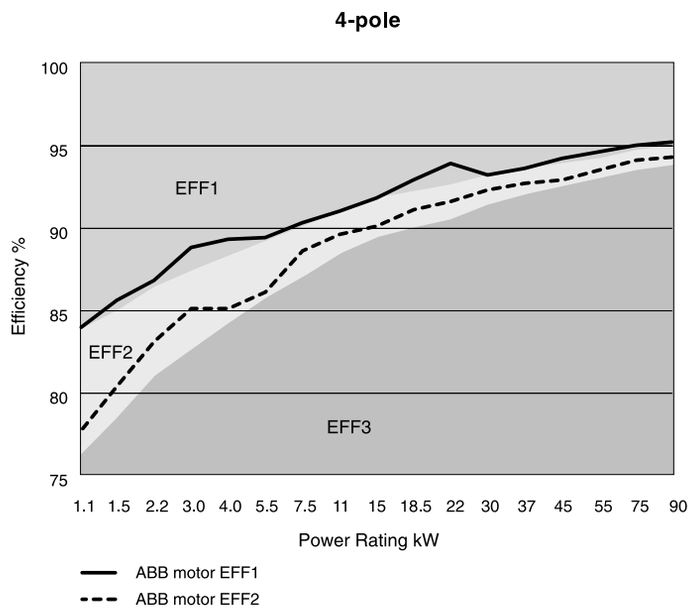

General technical specification

Mechanical and electrical design

Mounting arrangements

	CodeI/CodeII						Product code pos. 12
Foot-mounted motor.	IM B3 IM 1001	IM V5 IM 1011	IM V6 IM 1031	IM B6 IM 1051	IM B7 IM 1061	IM B8 IM 1071	A = foot-mounted, term.box top R = foot-mounted, term.box RHS L = foot-mounted, term.box LHS
	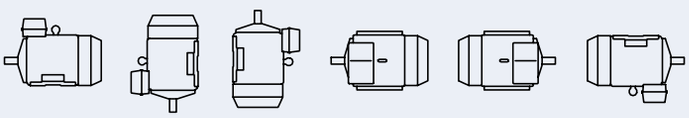						
Flange-mounted motor, large flange	IM B5 IM 3001	IM V1 IM 3011	IM V3 IM 3031	*) IM 3051	*) IM 3061	*) IM 3071	B = flange mounted, large flange
	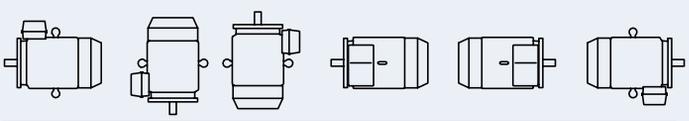						
Flange-mounted motor, small flange	IM B14 IM 3601	IM V18 IM 3611	IM V19 IM 3631	*) IM 3651	*) IM 3661	*) IM 3671	C = flange mounted, small flange
	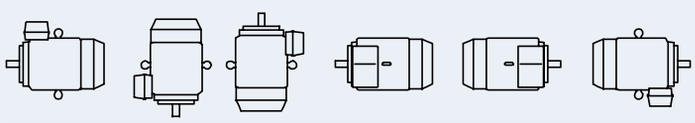						
Foot- and flange-mounted motor with feet, large flange	IM B35 IM 2001	IM V15 IM 2011	IM V36 IM 2031	*) IM 2051	*) IM 2061	*) IM 2071	H = foot/flange-mounted, term.box top S = foot/flange-mounted, term.box RHS T = foot/flange-mounted, term.box LHS
	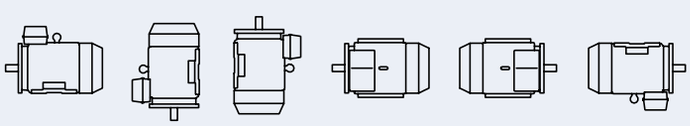						
Foot- and flange-mounted motor with feet, small flange	IM B34 IM 2101	IM V17 IM 2111	IM 2131	IM 2151	IM 2161	IM 2171	J = foot/flange-mounted, small flange
	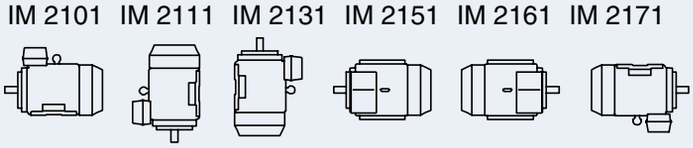						
Foot-mounted motor, shaft with free extensions	IM 1002	IM 1012	IM 1032	IM 1052	IM 1062	IM 1072	
	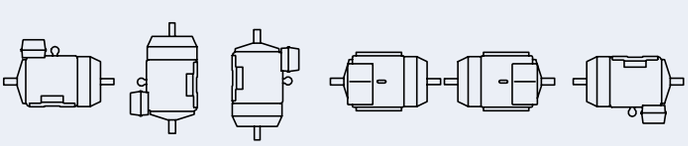						

*) Not stated in IEC 60034-7.

Cooling

Designation system concerning methods of cooling refers to standard IEC 60034-6.

Example

IC 4 (A) 1 (A) 6

International Cooling

Circuit arrangement
0: Free circulation (open circuit)
4: Frame surface cooled

Primary coolant
A for air (omitted for simplified designation)

Method of movement of primary coolant
0: Free convection
1: Self-circulation
6: Machine-mounted independent component

Secondary coolant
A for air (omitted for simplified designation)
W for water

Method of movement of secondary coolant
0: Free convection
1: Self-circulation
6: Machine-mounted independent component
8: Relative displacement

Degrees of protection: IP code/IK code

Classification of degrees of protection provided by enclosures of rotating machines are refers to:

- Standard IEC 60034-5 or EN 60529 for IP code
- Standard EN 50102 for IK code

IP protection:

Protection of persons against getting in contact with (or approaching) live parts and against contact with moving parts inside the enclosure. Also protection of the machine against ingress of solid foreign objects. Protection of machines against the harmful effects due to the ingress of water

IK code :

Classification of degrees of protection provided by enclosure for motors against external mechanical impacts.

IP 5 5

Characteristic letter

Degree of protection to persons and to parts of the motors inside the enclosure
2: Motors protected against solid objects greater than 12 mm
4: Motors protected against solid objects greater than 1 mm
5: Dust-protected motors
6: Dust-tight motors

Degree of protection provided by the enclosure with respect to harmful effects due to ingress of water
3: Motors protected against spraying water
4: Motors protected against splashing water
5: Motors protected against water jets
6: Motors protected against heavy seas

IK 08

International mechanical protection

Characteristic group

Relation between IK code and impact energy:

IK cod	IK 0	IK 01	IK 02	IK 03	IK 04	IK 05	IK 06	IK 07	IK 08	IK 09	IK 10
Impact energy Joule	*	0.15	0.2	0.35	0.5	0.7	1	2	5 ABB Standard	10	20

** not protected according to EN 50102*

Insulation

ABB uses class F insulation systems, which, with temperature rise B, is the most common requirement among industry today.

The use of Class F insulation with Class B temperature rise gives ABB products a 25° C safety margin. This can be used to increase the loading for limited periods, to operate at higher ambient temperatures or altitudes, or with greater voltage and frequency tolerances. It can also be used to extend insulation life. For instance, a 10 K temperature reduction will extend the insulation life.

Class F insulation system
- Max ambient temperature 40° C
- Max permissible temperature rise 105 K
- Hotspot temperature margin + 10 K

Class B rise
- Max ambient temperature 40° C
- Max permissible temperature rise 80 K
- Hotspot temperature margin + 10 K

Insulation system temperature class
- Class F 155° C
- Class B 130° C
- Class H 180° C

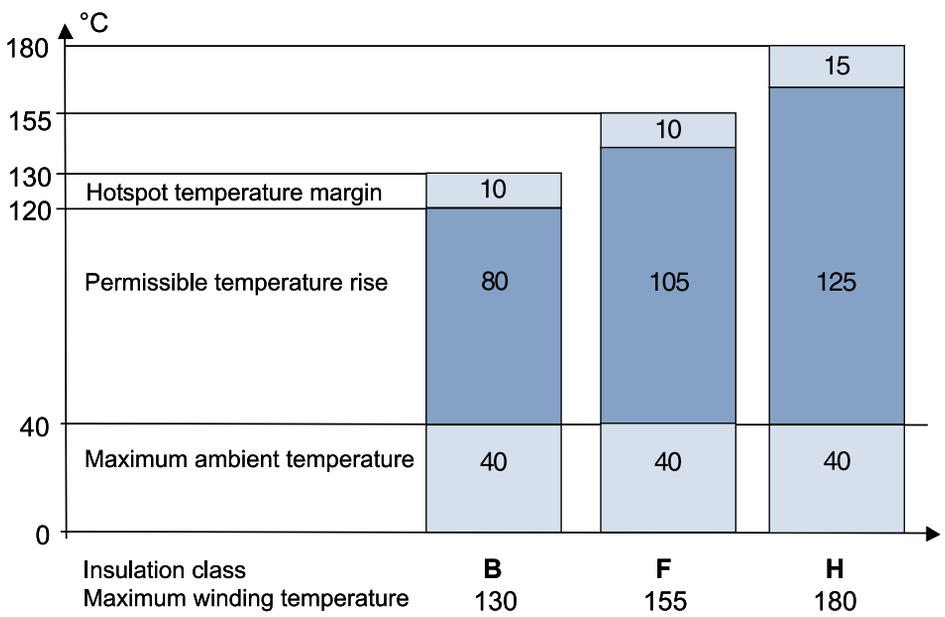

Safety margins per insulation class

Frequency converter drives

Squirrel cage induction motors offer excellent availability, reliability and efficiency. With a frequency converter – a variable speed drive (VSD) – the motor will deliver even better value. A variable speed drive motor can be started softly with low starting current, and the speed can be controlled and adjusted to suit the application demand without steps over a wide range. Also the use of a frequency converter together with a squirrel cage motor usually leads to remarkable energy and environmental savings.

However, all motors are not suitable for variable speed drive. There are several points that have to be taken into account in the design and selection of the motor, if it is intended for variable speed operation.

Within the General purpose motor range ABB offers motors designed for both Direct On Line (DOL) and variable speed applications.

For more demanding applications the use of ABB Process performance motors is recommended.

The following points must be taken into account, when selecting a motor to a variable speed drive:

1. Dimensioning

The voltage (or current) fed by the frequency converter is not purely sinusoidal. This may increase the losses, vibration, and noise of the motor. Furthermore, a change in the distribution of the losses may affect to the temperature rise of the motor. In each case, the motor must be correctly sized according to the instructions supplied with the selected frequency converter.

When using ABB converters, please use ABB's DriveSize dimensioning programme or the loadability curves of the corresponding converter type for sizing the motors. The loadability curve for applicable General purpose motors used with ABB's ACS 600- and ACS 800- frequency converters can be found in figure 3.

2. Speed range

In a frequency converter drive, the actual operating speed of the motor may deviate considerably from its nominal speed (i.e. the speed stamped on the rating plate).

For higher speeds, ensure that the highest permissible rotational speed of the motor or the critical speed of the entire equipment is not exceeded. When high speed operation exceeds the nominal speed of the motor, the following points should be checked:

– Maximum torque of the motor
– Bearing construction
– Lubrication
– Balancing
– Critical speeds
– Shaft seals
– Ventilation
– Fan noise

Guideline values of maximum speeds for M3AA motors within the General purpose motor range are described in figure 1 below. Exact values are available on request.

Figure 1. Guideline values of maximum speeds for General purpose motor in aluminium frame:

Motor size	Speed r/min	
	2-pole	4-pole
M3AA 90-100	6000	6000
M3AA 112-200	4500	4500
M3AA 225-280	3600	3600

At low speed operation the motor's ventilation fan looses its cooling capacity, which causes a higher temperature rise in the motor and in the bearings. A separate constant speed fan can be used to increase cooling capacity and loadability at low speed. It is also important to check the performance of the grease at low speeds.

3. Lubrication

Variable speed operation affects on the bearing temperature, which must be taken into account when selecting the lubrication method and grease type.
For example the life time of sealed bearings can be remarkably shorter than in direct on line operation. More information can be found from product specific sections of this catalogue and from ABB's Low Voltage Motors Manual.

4. Insulation protection

Frequency converter supply causes higher voltage stresses at the windings of the motor than the sinusoidal supply. Thus, the insulation system and possible filters must be selected according to the used voltage, cable length and converter type.

When using ABB's low voltage frequency converters, selection criterias mentioned in figure 2 must be followed.

5. Bearing currents

Bearing voltages and currents must be avoided in all motors. Assuming the use of ABB ACS 800 or ACS 550 drive, with uncontrolled DC-voltage, insulated bearings and/or properly dimensioned filters at the converter output must be used according to the instructions in figure 2. (For other alternatives and converter types, please contact ABB.) When ordering, clearly state which alternative will be used.

For more information about bearing currents and voltages, please contact ABB.

6. Cabling, grounding and EMC

The use of a frequency converter puts higher demands on the cabling and grounding of the drive system. The motor must be cabled by using shielded symmetrical cables and cable glands providing 360° bonding (also called EMC-glands). For motors up to 30 kW unsymmetrical cables can be used, but shielded cables are always recommended.

More information about grounding and cabling of a variable speed drive can be found from the manual "Grounding and cabling of the drive system" (Code: 3AFY 61201998 R0125 REV A) and the ABB's Low Voltage Motors Manual.

For fulfilling the EMC requirements, special EMC cable(s) must be used in addition to the correct cable gland mounting, with special, extra earthing pieces. Please refer to the manuals of the frequency converter.

1

Validity

Measures mentioned in Figure 2 apply to the applicable motors within the General motors range (not high-output versions) with ACS 800 and ACS 550 drives with uncontrolled DC-voltage. For other alternatives and converter types, please contact ABB.

Figure 2. Selection rules for insulation and filtering in variable speed drives

	Motor nominal power P_N or frame size		
	P_N < 100 kW	**$P_N \geq$ 100 kW or $\geq$ IEC 315**	**$P_N \geq$ 350 kW $\geq$ IEC 450**
$U_N \leq$ 500 V	Standard motor	Standard motor + Insulated N-bearing	Standard motor + Insulated N-bearing + Common mode filter
$U_N \leq$ 600 V	Standard motor + dU/dt-filter **OR** Reinforced insulation	Standard motor + dU/dt-filter (reactor) + Insulated N-bearing **OR** Reinforced insulation + Insulated N-bearing	Standard motor + Insulated N-bearing + dU/dt-filter + Common mode filter **OR** Reinforced insulation + Insulated N-bearing + Common mode filter
$U_N \leq$ 690 V	Reinforced insulation + dU/dt-filter	Reinforced insulation + dU/dt-filter (reactor) + Insulated N-bearing	Reinforced insulation + Insulated N-bearing + dU/dt-filter + Common mode filter

dU/dt filter (reactor)
Series reactor. DU/dt -filter decreases the changing rate of the phase and main voltages and thus reduces voltage stresses in the windings. DU/dt -filters also decrease so-called common mode currents and the risk of bearing currents.

Common mode filters
Common mode filters reduce so-called common mode currents in VSD applications and thus decrease the risk of bearing currents. Common mode filters do not significantly affect the phase or main voltages on the motor terminals.

Insulated Bearings
Bearings with insulated inner or outer races are used as the standard solution. So-called hybrid bearings, i.e. bearings with non-conductive ceramic balls, can also be used in special applications. More information for spare part selection is available on request.

Figure 3. Motor loadability with ACS 600 and ACS 800, Field weakening point 50 Hz.

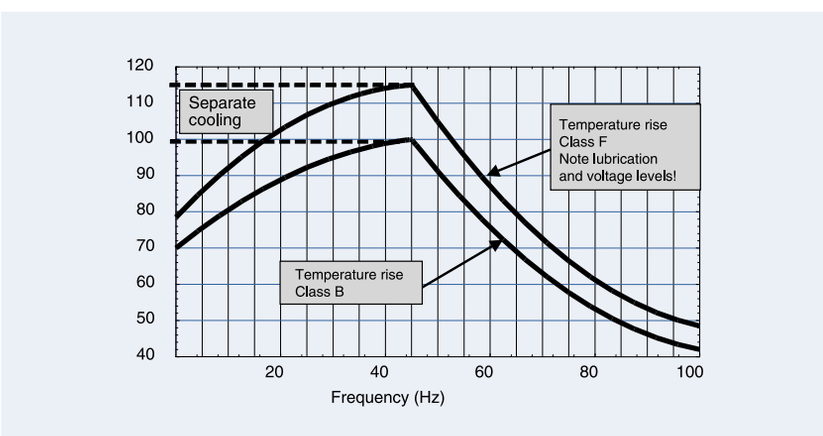

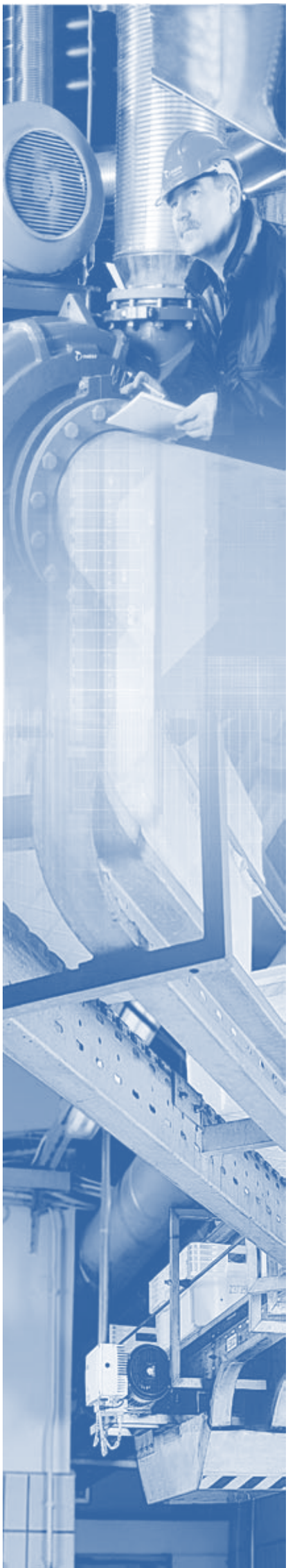

General Purpose Aluminum Motors

Totally enclosed squirrel cage three phase low voltage motors, Sizes 56 - 280, 0.06 to 95 kW

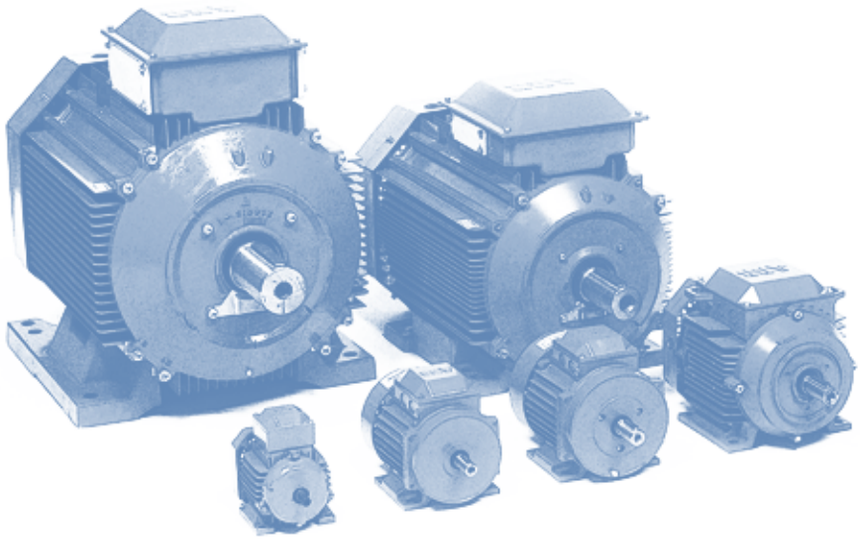

2

www.abb.com/motor&drives

> Motors

> Low voltage motors

> General purpose motors

Mechanical design 12

Rating plates 22

Ordering information 23

Technical data 24

Variant codes 46

Dimension drawings 53

Accessories 74

Aluminum motors in brief 77

Mechanical design

Stator

Stator framework, bearing shields and feet are made of an extra corrosion resistant aluminum alloy with low copper content with the following exceptions:
M2AA 180-250 and M3AA 250 SMA-2 basic version, have cast iron feet.
M3AA 280 has feet and D-end shield of cast iron.

M3AA 250 SMB 2-pole, high output version, as well as M3AA 280 2-pole have cast iron feet and bearing shields.

The flange bearing shields of sizes 180 to 280 are made of cast iron.

Drain holes

Motors that will be operated in very humid or wet environments and especially under intermittent duty should be provided with drain holes. The appropriate IM designation, such as IM 3031, is specified on the basis of the method of mounting the motor.

Motors are provided with closable plastic plugs in the drain holes (see diagram below). The plugs will be open on delivery. When mounting the motors it should be ensured that the drain holes face downwards. In the case of vertical mounting, the upper plug must be hammered home completely. In very dusty environments both plugs should be hammered home.

Sizes 56 to 63 are supplied as standard with drain holes on D-end while sizes 71 to 280 are supplied with drain holes both on D-end and N-end.

When mounting arrangement differs from foot mounted IM B3, please mention variant code 066 when ordering.

See variant codes 065, 066 and 076 under the heading “Drain holes”.

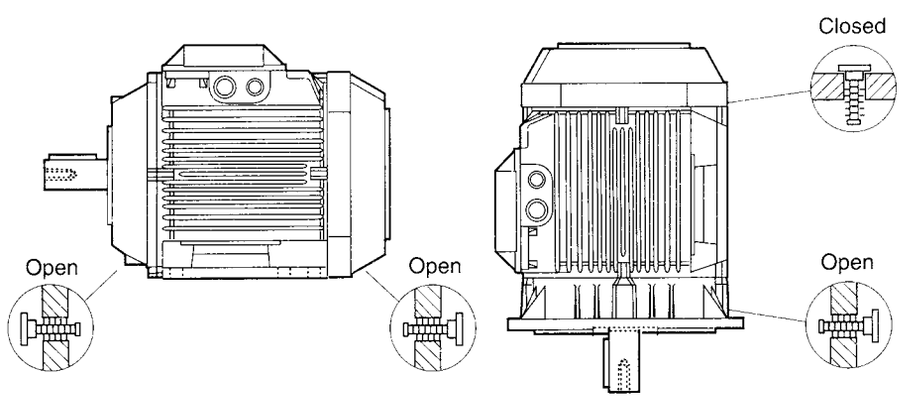

Terminal box

Sizes 56 to 180 and M2AA 200
The terminal box is made of aluminum alloy and is located on top of the stator. The lower part of the box is integrated with the stator. It is provided with 2 knockout openings on each side. Sizes 160-180 also have a third smaller opening. Cable glands are not included.

Sizes 200 to 280, except M2AA 200
The terminal box and cover are made of deep drawn steel and mounted on top of the stator. The box is bolted to the stator and is not rotatable. The size of the box is the same for all motors.

In the basic design the terminal box is provided with two FL 13 flange openings, one on each side. The opening on the right side, seen from the D-end, is supplied with a flange with two holes for M40 cable glands. On delivery the holes are sealed by means of plastic plugs. Cable glands are not supplied. The opening on the other side is provided with a cover flange.

The motors can also be provided with an extra large terminal box, standard for voltage code S and frame size 280. See variant code 019 under the heading “Terminal box”. This will increase the dimension HD by 32 mm. The box is supplied with two FL 21 openings. The right opening is provided with a flange with two holes for M63 cable glands. The holes are sealed by means of plastic plugs. Cable glands are not supplied. The opening on the other side is provided with a cover flange. The box can also be provided with an FL 13 opening towards the N-end.

When new motors are manufactured the terminal box can be mounted on the left or the right side. See variant codes 021 and 180 under the heading “Terminal box”.

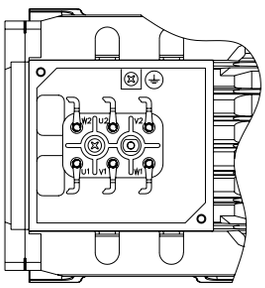

Terminal box size 56-80.

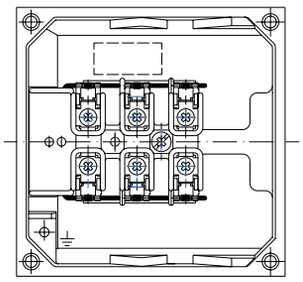

Terminal box size 90-100.

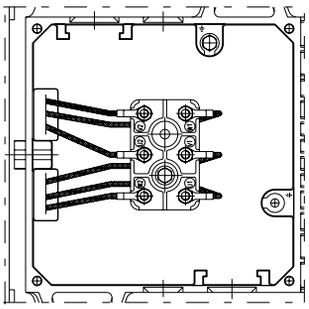

Terminal box size 112-132.

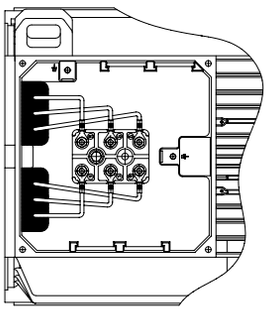

Terminal box size 160-180 and M2AA 200.

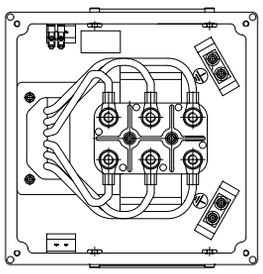

Terminal box size 200-280, except M2AA 200.

Connections

The terminal block is provided with 6 terminals for connecting Cu-cable. The terminals are marked in accordance with IEC 60034-8.

Connection openings

Motor size	Opening	Metric cable entry	Method of connection	Terminal bolt size	Maximum connectable Cu-cable area, mm²
56-63	Knock-out opening	1 x M16 x 1.5 1 x Pg 11	Screw terminal	M4	2.5
71-80	Knock-out opening	2 x M20 x 1.5 2 x Pg 16	Screw terminal	M4	4
90-100	Knock-out opening	2 x (M25 + M20)	Screw terminal	M4	6
112-132	Knock-out opening	2 x (M25 + M20)	Cable lug	M5	10
160-180	Knock-out opening	2 x (2 x M40 + M16)	Cable lug	M6	35
200 [1]	Knock-out opening	2 x (2 x M40 + M16)	Cable lug	M6	35
200-250 [2]	2 x FL 13	1 x (2 x M40 + M16)	Cable lug	M10	70
280	2 x FL 21	1 x (2 x M63 + M16)	Cable lug	M10	70

[1] M2AA [2] M2AA 200 excluded

Bearings

The motors are provided with bearings according to the tables below.

Greater axial forces can be tolerated if the motors are provided with angular contact ball bearings. Note that in such cases the axial force must only operate in one direction.

Motor versions with roller bearings tolerate greater radial forces.

Basic version with deep groove ball bearings

Basic design motors Motor size		Foot- and flange-mounted motor D-end	 N-end
56		6201-2Z/C3	6201-2Z/C3
63		6202-2Z/C3	6201-2Z/C3
71		6203-2Z/C3	6202-2Z/C3
80		6204-2Z/C3	6203-2Z/C3
90		6205-2Z/C3	6204-2Z/C3
100		6306-2Z/C3	6205-2Z/C3
112 [2]	short	6206-2Z/C3	6205-2Z/C3
112 [2]	long	6206-2Z/C3	6206-2Z/C3
132 [2]	short	6208-2Z/C3	6206-2Z/C3
132 [2]	long	6208-2Z/C3	6208-2Z/C3
160		6309-2Z/C3	6209-2Z/C3
180		6310-2Z/C3	6209-2Z/C3
200 [1]		6312-2Z/C3	6209-2Z/C3
200		6312/C3	6210/C3
225 [1]		6313/C3	6210/C3
225		6313/C3	6212/C3
250 [1]		6315/C3	6212/C3
250		6315/C3	6213/C3
280	2-pole	6315/C3	6213/C3
280	4-8 pole	6316/C3	6213/C3

[1] M2AA
[2] short: M2AA 112: M-2,M-4; M2AA 132: SA-2, SB-2, S-4, M-4 M3AA 112: M-6, M-8; M3AA 132: SA-2, S-4, S-6, MA-6, MB-6, S-8, M-8, S-two-speed
long: remaining versions

Alternative designs:

Version with roller bearings

It is recommended to use roller bearings in belt drives for motor sizes 160 - 280.

See variant code 037 under the heading “Bearings and lubrication”.

Motor size		D-end	N-end
90		NU 205	–
100		NU 306	–
160		NU 309 ECP	–
180		NU 310 ECP	–
200		NU 312 ECP	–
225		NU 313 ECP	–
250		NU 315 ECP	–
280	2-pole	NU 315 ECP	–
280	4-8 pole	NU 316 ECP	–

Version with angular contact ball bearings

See variant codes 058 and 059 under the heading “Bearings and lubrication”.

Motor size		D-end 058	N-end 059
90		7205 B	7204 B
100		7306 B	7205 B
112 [2]	short	7206 BE	7205 BE
112 [2]	long	7206 BE	7206 BE
132 [2]	short	7208 BE	7206 BE
132 [2]	long	7208 BE	7208 BE
160 [1]		7309 BE	7209 BE
180 [1]		7310 BE	7209 BE
200 [1]		7312 BE	7210 BE
225 [1]		7313 BE	7212 BE
250 [1]		7315 BE	7213 BE
280	2-pole	7315 BE	7213 BE
280	4-8 pole	7316 BE	7213 BE

[1] M2AA on request
[2] short: M2AA 112: M-2,M-4; M2AA 132: SA-2, SB-2, S-4, M-4 M3AA 112: M-6, M-8; M3AA 132: SA-2, S-4, S-6, MA-6, MB-6, S-8, M-8, S-two-speed
long: remaining versions

Transport locking

Motors provided with roller bearings or angular contact ball bearings are fitted with a transport lock to prevent damage to the bearings, due to vibration, during transport.

Axially-locked bearings

The table below shows which of the motor's bearings are axially locked in the bearing seat. In motor sizes 56 to 80 the locking is done by an inner bearing circlip, in motor sizes 90 to 280 by an inner bearing cover.

See also variant code 042 under the heading "Bearings and lubrication".

Motor size	Foot-mounted motors	Flange-mounted motors Large flange	Small flange
56-63	On request at D-end	On request at D-end	On request at D-end
71-80	On request at D-end	D-end	On request at D-end
90-100	D-end [1)]	D-end [1)]	D-end [1)]
112-132	D-end [1)]	D-end	D-end
160-280	D-end	D-end	–

[1)] A spring-washer at the N-end presses the rotor toward the D-end.

Lubrication

The motors are delivered with bearing grease for use at normal temperatures in dry or humid environments. The motors are lubricated for ambient temperatures 40°C and in some cases even above 40°C, see table 1 next page.

Motor sizes 63-180 and M2AA 200 are provided with shielded bearings. On request, motor sizes 90 to 180 and M2AA 200 are provided with grease nipples for regreasing, see variant code 041 under the heading "Bearings and lubrications".

Motor sizes 200-280, except M2AA 200, are provided with grease nipples for re-greasing as standard.

The lubrication interval L_1, suitable for relubricated bearings, is defined as the number of operating hours after which 99 per cent of the bearings are adequately lubricated.

Lubrication intervals and grease quantities are specified on a plate on the motor as well as in the manual supplied with the motor.

The grease lifetime $L_{10,}$ suitable for permanent lubricated bearings, is defined as the number of operating hours after which 90 per cent of the bearings are adequately lubricated. 50 per cent of the bearings achieve two times this figure. Maximum lifetime, however, should be regarded as 40000 hours.

In case of high ambient temperatures the shaft loads must be reduced compared to permissible loadings in the table (see pages 18 to 21), please contact ABB.

Table 1: Grease lifetime L_{10} in deep groove ball bearings of type 2Z in horizontally mounted motors in continuous running duty.

Motor	r/min	Ambient temperature and rated output											
		25 °C		40 °C		50 °C		60 °C		70 °C		80 °C	
		Basic	High	Basic	High	Basic	High	Basic	High	Basic	High	Basic	High
56-63	3000	40000	40000	40000	40000	40000	40000	40000	40000	40000	40000	40000	27000
	1500												37000
	1000												
	750											32000	
71	3000	40000	40000	40000	40000	40000	40000	40000	40000	40000	40000	40000	27000
	1500												37000
	1000												
	750											32000	
80	3000	40000	40000	40000	40000	40000	40000	40000	30000	24000	19000		
	1500									40000	29000		
	1000								40000		40000	40000	
	750								32000			32000	
90	3000	40000	40000	40000	40000	40000	40000	30000	24000	19000	15000		
	1500							40000	40000	24000	40000	40000	
	1000									36000	36000		
	750								31000	40000		31000	
100	3000	40000	40000	40000	40000	40000	35000	40000	22000	27000	14000	17000	
	1500				33000		21000			33000		21000	
	1000						33000			40000		40000	
	750				40000		40000		30000	37000			
112	3000	40000	40000	40000	40000	40000	30000	26000	17000				
	1500				40000			27000					
	1000				35000			40000					
	750				35000			40000					
132	3000	40000	40000	40000	24000	40000		23000					
	1500				40000		22000	40000		35000			
	1000						30000			35000			
	750						40000			35000			
160	3000	40000	40000	40000	31000	26000	17000	14000	9000				
	1500				40000	40000	25000	37000					
	1000						25000	30000					
	750						30000	30000					
180	3000	40000	38000	38000	34000	34000	29000	20000	15000	10000	8000		
	1500		40000	40000	38000	40000	20000	28000		15000			
	1000				40000		40000	40000	20000	30000			
	750				40000		30000	40000					
M2AA 200	3000	27000		27000		20000		11000					
	1500	40000		38000		38000		22000					

In vertically mounted motors, the grease lifetime is half the figures above.
For applications corresponding to the empty cells in the table, please contact ABB. These applications can imply reduced lifetime for bearings and winding.
Motors with roller bearings (optional) have considerably shorter grease life. For continuous operation regreasing nipples should be considered.

Lubrication intervals

ABB follows the L1-principle in defining lubrication interval. That means that 99% of the motors are sure to make the interval time. The lubrication intervals can also be calculated according to the L10-principle, which are normally doubled compared to L1-values. Values available from ABB at request.

The table below gives lubrication intervals according to the L1-principle for different speeds. The values are valid for horizontal mounted motors (B3), with about 80°C bearing temperature and using good quality grease with lithium complex soap and with mineral or PAO-oil.

For more information, see ABB's Low Voltage Motors Manual.

Frame size	Amount of grease g	3600 r/min	3000 r/min	1800 r/min	1500 r/min	1000 r/min	500-750 r/min
Ball bearings:		lubrication intervals in duty hours					
180	30	6000	8000	13500	16000	20000	23000
200	40	4000	6000	11000	13000	17000	21000
225	50	3000	5000	10000	12500	16500	20000
250	60	2500	4000	9000	11500	15000	18000
280	35	2000	3500	-	-	-	-
280	70	-	-	8000	10500	14000	17000

Frame size	Amount of grease g	3600 r/min	3000 r/min	1800 r/min	1500 r/min	1000 r/min	500-750 r/min
Roller bearings: lubrication intervals in duty hours							
180	30	3000	4000	7000	8000	10000	11500
200	40	2000	3000	5500	6500	8500	10500
225	50	1500	2500	5000	6000	8000	10000
250	60	1300	2200	4500	5700	7500	9000
280	35	1000	1800	-	-	-	-
280	70	-	-	4000	5300	7000	8500

Permissible loading on shaft

Pulley diameter

When the desired bearing life has been determined the minimum permissible pulley diameter can be calculated with FR, according to the formula:

$$D = \frac{1.9 \bullet 10^7 \bullet K \bullet P}{n \bullet F_R}$$

where:

D = diameter of pulley, mm
P = power requirement, kW
n = motor speed, r/min.
K = belt tension factor, dependent on belt type and type of duty. A common value for V-belts is K = 2.5
F_R = permissible radial force according to the tables

Bearing life

The nominal life is defined as the number of hours that are attained or exceeded by 90% of identical bearings, in a large test series, under certain specified conditions. 50% of the bearings attain a life of as much as 5 times this figure.

The life of bearings is dependent on various factors such as bearing load, motor speed, operating temperature and the purity of the grease. The permissible radial and axial loading for different motor sizes is shown in the table on the following pages.

The table is valid for 50 Hz. For 60 Hz and/or some other bearing life than specified in the table the values are changed according to the table on the right.

The table values assume the occurrence of only radial or axial forces. In the case of simultaneous radial and axial forces information can be supplied on request. It is assumed that the radial force is applied at the end of the motor shaft.

Permissible force at changed bearing life or supply frequency

Bearing life in hours at		Permissible force, as percentage of value in tables
50 Hz	60 Hz	
25,000	21,000	100% of value for 25,000 hours
40,000	33,000	100% of value for 40,000 hours
63,000	52,000	86% of value for 40,000 hours
80,000	67,000	80% of value for 40,000 hours

Permissible radial forces

The table at right shows the permissible radial force in Newton assuming zero axial force.

Permissible loads of simultaneous radial and axial forces will be supplied on request.

The bearing life, L_{10}, is calculated according to SKF's theory on bearing life $L10_{aah}$, which also takes the purity of the grease into consideration. An adequate lubrication is a necessary prerequisite for the table at right.

If the radial force is applied between points X_0 and X_{max}, the permissible force F_R can be calculated from the following formula:

$$F_R = F_{X0} - \frac{X}{E} (F_{X0} - F_{Xmax})$$

E = length of shaft extension in basic version.

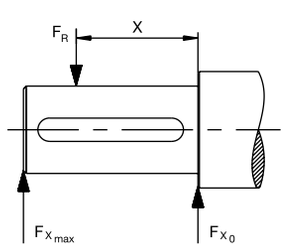

Motor size	No. of poles	Length of shaft extension E (mm)	Ball bearings Basic design with deep groove ball bearings 25,000 hrs FX_0 (N)	FX_{max} (N)	40,000 hrs FX_0 (N)	FX_{max} (N)
56	2	20	240	200	260	200
	4	20	300	200	280	200
	6	20	340	280	340	280
	8	20	340	280	340	280
63	2	23	490	400	490	400
	4	23	490	400	490	400
	8	23	490	400	490	400
71	2	30	680	570	680	570
	4	30	680	570	680	570
	6	30	680	570	680	570
	8	30	680	570	680	570
80	2	40	630	750	930	750
	4	40	930	750	930	750
	6	40	930	750	930	750
	8	40	930	750	930	750
90	2	50	1010	810	1010	810
	4	50	1010	810	1010	810
	6	50	1010	810	1010	810
	8	50	1010	810	1010	810
100[1)]	2	60	2280	1800	2280	1800
	4	60	2280	1800	2280	1800
	6	60	2280	1800	2280	1800
	8	60	2280	1800	2280	1800

[1)] Basic design with 63-series bearings at the D-end.

Permissible radial forces
Motor sizes 112 to 180

Motor size	No. of poles	Length of shaft extention E (mm)	Ball bearings Basic design with deep groove ball bearings 25,000 hrs FX_0 (N)	FX_{max} (N)	40,000 hrs FX_0 (N)	FX_{max} (N)	Alternative design with 63-series bearings 25,000 hrs FX_0 (N)	FX_{max} (N)	40,000 hrs FX_0 (N)	FX_{max} (N)	Roller bearings Alternative design with roller bearings 25,000 hrs FX_0 (N)	FX_{max} (N)	40,000 hrs FX_0 (N)	FX_{max} (N)
112 M	2	60	1800	1420	1620	1280	2160	1700	2160	1700				
	4	60	1790	1410	1590	1250	2160	1700	2160	1700				
	6	60	1910	1510	1700	1340	2160	1700	2160	1700				
	8	60	1940	1530	1720	1360	2160	1700	2160	1700				
112 MB	2	60	1820	1470	1640	1330	2100	1700	2100	1700				
	4	60	1770	1430	1560	1260	2100	1700	2100	1700				
	6	60	1880	1520	1650	1340	2100	1700	2100	1700				
	8	60	1930	1560	1690	1370	2100	1700	2100	1700				
132 SA	2	80	3020	2360	2740	2140	4070	3180	3670	2870				
132 SB	2	80	3020	2360	2730	2130	4060	3170	3670	2870				
132 SC	2	80	3030	2430	2750	2200	3990	3200	3690	2960				
132 S	4	80	3120	2440	2790	2180	4090	3200	3830	2990				
132 M	4	80	3080	2410	2750	2150	4100	3200	3780	2950				
132 MB	4	80	3050	2440	2710	2170	3990	3200	3740	3000				
132 S	6	80	3280	2560	2910	2270	4100	3200	3990	3120				
132 MA	6	80	3240	2530	2880	2250	4100	3200	3970	3100				
132 MB	6	80	3200	2500	2840	2220	4100	3200	3930	3070				
132 MC	6	80	3010	2510	2660	2220	3840	3200	3700	3090				
132 S	8	80	3370	2630	2980	2330	4100	3200	4100	3200				
132 M	8	80	3310	2590	2940	2300	4100	3200	4060	3170				
132 MB	8	80	3280	2630	2910	2330	3990	3200	3990	3200				
160 MA	2	110	4470	3500	4470	3500					4470	3500	4470	3500
	8	110	4470	3500	4470	3500					4470	3500	4470	3500
160 M	2	110	4470	3500	4470	3500					4470	3500	4470	3500
	4	110	4470	3500	4470	3500					4470	3500	4470	3500
	6	110	4470	3500	4470	3500					4470	3500	4470	3500
	8	110	4470	3500	4470	3500					4470	3500	4470	3500
160 L	2	110	4470	3500	4470	3500					4470	3500	4470	3500
	4	110	4470	3500	4470	3500					4470	3500	4470	3500
	6	110	4470	3500	4470	3500					4470	3500	4470	3500
	8	110	4380	3500	4380	3500					4380	3500	4380	3500
160 LB	2	110	4470	3500	4470	3500					4470	3500	4470	3500
	4	110	4470	3500	4470	3500					4470	3500	4470	3500
	6	110	4380	3500	4380	3500					4380	3500	4380	3500
	8	110	4380	3500	4380	3500					4380	3500	4380	3500
180 M	2	110	6900	5550	6360	5110					7338	5900	7340	5900
	4	110	7100	5710	6470	5200					7338	5900	7340	5900

Permissible radial forces
Motor sizes 180 to 280

Motor size	No. of poles	Length of shaft extention E (mm)	Ball bearings Basic design with deep groove ball bearings 25,000 hrs FX_0 (N)	FX_{max}(N)	40,000 hrs FX_0 (N)	FX_{max}(N)	Roller bearings Alternative design with roller bearings 25,000 hrs FX_0 (N)	FX_{max}(N)	40,000 hrs FX_0 (N)	FX_{max}(N)
180 L	4	110	7050	5670	6410	5150	7340	5900	7340	5900
	6	110	7340	5900	6840	5500	7340	5900	7340	5900
	8	110	7340	5900	6930	5570	7340	5900	7340	5900
180 LB	2	110	6900	5550	6360	5110	7340	5900	7340	5900
	4	110	6990	5670	6350	5150	7280	5900	7280	5900
	6	110	7280	5900	6780	5500	7280	5900	7280	5900
	8	110	7280	5900	6870	5570	7280	5900	7280	5900
M2AA 200	2	110	7000	5800	6300	5200	9100	7500	8100	6700
	4	110	6700	5500	5900	4900	9500	7800	8600	7100
M3AA 200 MLA	2	110	4940	4070	4370	3600	9460	7790	9460	7790
	4	110	5360	4410	4690	3860	9460	7790	9460	7790
	6	110	5590	4600	4850	3990	9460	7790	9460	7790
	8	110	5680	4680	4910	4040	9460	7790	9460	7790
M3AA 200 MLB	2	110	4930	4060	4360	3590	9460	7790	9460	7790
	4	110	5290	4360	4630	3810	9460	7790	9460	7790
	6	110	5510	4540	4780	3940	9460	7790	9460	7790
	8	110	5670	4670	4890	4030	9460	7790	9460	7790
M3AA 200 MLC	2	110	4920	4050	4360	3590	9460	7790	9460	7790
	6	110	5380	4430	4640	3820	9460	7790	9460	7790
225 SMA	4	140	5830	4930	5100	4320	9810	8300	9810	8300
	8	140	6400	5420	5550	4700	9810	8300	9810	8300
225 SMB	2	110	5400	4530	4780	4010	10600	8900	10600	8900
	4	140	5750	4870	5030	4260	9810	8300	9810	8300
	6	140	6000	5080	5200	4400	9810	8300	9810	8300
	8	140	6320	5350	5470	4630	9810	8300	9810	8300
225 SMC	2	110	5370	4510	4750	3990	10600	8900	10600	8900
	4	140	5720	4840	5000	4230	9810	8300	9810	8300
	6	140	5930	5020	5130	4340	9810	8300	9810	8300
	8	140	6180	5230	5320	4500	9810	8300	9810	8300
250 SMA	2	140	6970	5620	6180	4980	11290	9100	11290	9100
	4	140	7693	6200	6750	5440	14330	11550	14330	11550
	6	140	7978	6430	6940	5590	14330	11550	14330	11550
	8	140	8250	6650	7150	5760	14330	11500	14330	11550
250 SMB	2	140	6960	5610	6150	4960	11290	9100	11290	9100
	4	140	7620	6140	6680	5380	14330	11550	14330	11550
	6	140	7940	6400	6900	5560	14330	11550	14330	11550
	8	140	8180	6590	7070	5700	14330	11550	14330	11550
280 SMA	2	140	6650	5400	5850	4750	15260	12400	13790	11200
	4	140	7750	6300	6890	5600	18460	15000	16560	13450
	6	140	8810	7100	7760	6250	21090	17000	18860	15200
	8	140	9000	7250	7880	6350	21840	17600	19360	15600
280 SMB	2	140	6460	5250	5720	4650	15260	12400	13790	11200
	4	140	7510	6100	6590	5350	17850	14500	16060	13050

Permissible axial forces

The following tables give the permissible axial forces in Newton, assuming zero radial force. The values are based on normal conditions at 50 Hz with standard bearings and calculated bearing lives of 20,000 and 40,000 hours.

At 60 Hz the values are to be reduced by 10%.

For two-speed motors, the values are to be based on the higher speed. The permissible loads of simultaneous radial and axial forces will be supplied on request.

Given axial forces F_{AD}, assumes D-bearing locked by means of locking ring.

Mounting arrangement IM B3

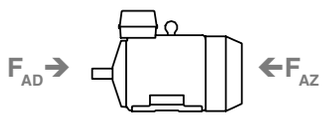

Motor size	20,000 hours								40,000 hours							
	2-pole		4-pole		6-pole		8-pole		2-pole		4-pole		6-pole		8-pole	
	F_{AD} N	F_{AZ} N	F_{AD} N	F_{AZ} N	F_{AD} N	F_{AZ} N	F_{AD} N	F_{AZ} N	F_{AD} N	F_{AZ} N	F_{AD} N	F_{AZ} N	F_{AD} N	F_{AZ} N	F_{AD} N	F_{AZ} N
56	470	230	520	280	540	300	540	300	430	190	470	230	480	240	480	240
63	790	390	865	465	-	-	895	495	720	320	780	380	-	-	895	495
71	985	485	1070	570	1135	635	1130	630	900	400	970	470	1020	520	1015	515
80	1305	705	1420	820	1505	905	1540	940	1185	585	1285	685	1350	750	1375	775
90	1360	930	1490	1070	1590	1165	1635	1210	1225	800	1335	915	1415	990	1450	1025
100	2805	1945	3075	2215	3260	2400	3355	2495	2540	1680	2760	1900	2910	2050	2985	2125
112 M	1500	1500	1600	1600	1730	1730	1750	1750	1320	1320	1390	1390	1500	1500	1510	1510
112 MB	1530	1530	1600	1600	1720	1720	1760	1760	1340	1340	1390	1390	1490	1490	1520	1520
132 SA	2570	2570	-	-	-	-	-	-	2260	2260	-	-	-	-	-	-
132 SB	2570	2570	-	-	-	-	-	-	2260	2260	-	-	-	-	-	-
132 SC	2520	2520	-	-	-	-	-	-	2210	2210	-	-	-	-	-	-
132 S	-	-	2770	2770	2950	2950	3040	3040	-	-	2440	2440	2580	2580	2650	2650
132 M	-	-	2750	2750	-	-	3020	3020	-	-	2420	2420	-	-	2630	2630
132 MA	-	-	-	-	2940	2940	-	-	-	-	-	-	2570	2570	-	-
132 MB	-	-	2680	2680	2910	2910	2940	2940	-	-	2340	2340	2550	2550	2560	2560
132 MC	-	-	-	-	2830	2830	-	-	-	-	-	-	2460	2460	-	-
160 MA	4730	4730	-	-	-	-	5240	5240	4220	4220	-	-	-	-	4640	4640
160 M	4730	4730	5230	5230	5220	5220	5220	5220	4220	4220	4640	4640	4630	4630	4630	4630
160 L	5240	5240	5220	5220	5050	5050	4720	4720	4650	4650	4630	4630	4470	4470	4740	4740
160 LB	4240	4240	5050	5050	4720	4720	4720	4720	4650	4650	4470	4470	4740	4740	4740	4740
180 M	4660	4660	4950	4950	-	-	-	-	4250	4250	4500	4500	-	-	-	-
180 L	-	-	4870	4870	5200	5200	5370	5370	-	-	4390	4390	4710	4710	4850	4850
180 LB	4660	4660	4870	4870	5200	5200	5370	5370	4250	4250	4390	4390	4710	4710	4850	4850
200 MLA	3050	3050	3850	3850	4400	4400	4850	4850	2430	2430	3050	3050	3500	3500	3850	3850
200 MLB	3050	3050	3850	3850	4400	4400	4850	4850	2430	2430	3050	3050	3500	3500	3850	3850
200 MLC	3050	3050	-	-	4400	4400	-	-	2430	2430	-	-	3500	3500	-	-
225 SMA	-	-	4340	4340	-	-	5460	5460	-	-	3440	3440	-	-	4340	4340
225 SMB	3440	3440	4340	4340	4960	4960	5460	5460	2730	2730	3440	3440	3940	3940	4340	4340
225 SMC	3440	3440	4340	4340	4960	4960	5460	5460	2730	2730	3440	3440	3940	3940	4340	4340
250 SMA	4180	4180	5260	5260	6020	6020	6630	6630	3320	3320	4180	4180	4780	4780	5260	5260
250 SMB	4180	4180	5260	5260	6020	6020	6630	6630	3320	3320	4180	4180	4780	4780	5260	5260
280 SMA	5000	5000	6200	6200	7100	7100	7350	7350	4500	4500	5400	5400	6250	6250	6500	6500
280 SMB	5000	5000	6100	6100	-	-	-	-	4400	4400	5300	5300	-	-	-	-

Permissible axial forces

Mounting arrangement IM V1

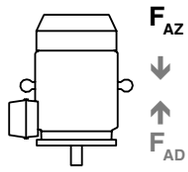

Motor size	20,000 hours								40,000 hours							
	2-pole		4-pole		6-pole		8-pole		2-pole		4-pole		6-pole		8-pole	
	F_{AD} N	F_{AZ} N	F_{AD} N	F_{AZ} N	F_{AD} N	F_{AZ} N	F_{AD} N	F_{AZ} N	F_{AD} N	F_{AZ} N	F_{AD} N	F_{AZ} N	F_{AD} N	F_{AZ} N	F_{AD} N	F_{AZ} N
56	470	230	520	270	540	290	540	290	430	190	470	230	480	240	480	240
63	790	380	875	455	-	-	905	485	725	310	790	370	-	-	810	390
71	998	470	1085	555	1150	620	1145	615	910	385	985	455	1035	505	1030	500
80	1320	685	1445	790	1530	880	1565	915	1200	565	1310	655	1375	725	1400	750
90	1390	900	1525	1035	1625	1130	1670	1180	1255	770	1370	880	1450	955	1485	990
100	2855	1890	3135	2155	3320	2340	3420	2425	2590	1625	2820	1840	2970	1990	3050	2060
112 M	2290	2170	2490	2330	2680	2510	2770	2590	2030	1910	2190	2030	2350	2180	2410	2230
112 MB	2340	2170	2520	2300	2700	2480	2790	2570	2080	1910	2220	2000	2360	2140	2430	2210
132 SA	3550	3370	-	-	-	-	-	-	3160	2980	-	-	-	-	-	-
132 SB	3560	3360	-	-	-	-	-	-	3170	2970	-	-	-	-	-	-
132 SC	3550	3270	-	-	-	-	-	-	3160	2880	-	-	-	-	-	-
132 S	-	-	3910	3630	4160	3880	4320	3990	-	-	3460	3180	3660	3380	3780	3450
132 M	-	-	3910	3590	-	-	4330	3930	-	-	3450	3130	-	-	3790	3390
132 MA	-	-	-	-	4180	3850	-	-	-	-	-	-	3670	3340	-	-
132 MB	-	-	3880	3460	4180	3780	4260	3840	-	-	3430	3010	3680	3280	3730	3310
132 MC	-	-	-	-	4110	3690	-	-	-	-	-	-	3610	3190	-	-
160 MA	4940	4520	-	-	-	-	5520	4960	4430	4010	-	-	-	-	4920	4360
160 M	4960	4500	5500	4960	5540	4900	5540	4900	4450	3990	4910	4370	4950	4310	4950	4310
160 L	5520	4960	5560	4880	5420	4680	5170	4280	4930	4370	4970	4290	4840	4100	5190	4300
160 LB	5540	4940	5420	4680	5170	4280	5170	4280	4950	4350	4840	4100	5190	4300	5190	4300
180 M	4990	4330	5400	4500	-	-	-	-	4580	3920	4950	4050	-	-	-	-
180 L	-	-	5390	4350	5770	4630	5930	4810	-	-	4910	3870	5280	4140	5410	4290
180 LB	5040	4280	5470	4270	5810	4590	5980	4760	4630	3870	4990	3790	5320	4100	5460	4240
200 MLA	3600	2500	4580	3120	5280	3530	5720	3980	2970	1870	3780	2320	4370	2620	4720	2980
200 MLB	3600	2500	4580	3120	5280	3530	5720	3980	2970	1870	3780	2320	4370	2620	4720	2980
200 MLC	3600	2500	-	-	5280	3530	-	-	2970	1870	-	-	4370	2620	-	-
225 SMA	-	-	5230	3440	-	-	6530	4400	-	-	4330	2550	-	-	5400	3270
225 SMB	4140	2740	5230	3440	6030	3900	6530	4400	3430	2030	4330	2550	5010	2870	5400	3270
225 SMC	4140	2740	5230	3440	6030	3900	6530	4400	3430	2030	4330	2550	5010	2870	5400	3270
250 SMA	5020	3330	6380	4150	7440	4610	8050	5210	4160	2470	5290	3060	6200	3360	6680	3840
250 SMB	5020	3330	6380	4150	7440	4610	8050	5210	4160	2470	5290	3060	6200	3360	6680	3840
280 SMA	5950	4050	7380	5010	8540	5660	8810	5890	5450	3550	6580	4210	7690	4810	7960	5040
280 SMB	5950	4050	7380	5010	-	-	-	-	5450	3550	6580	4210	-	-	-	-

Rating plates

Single-speed motors of size 56 to 132 are stamped with 50 and 60 Hz at voltage code S and D. The current rating for each voltage range is specified on the rating plate. It represents the highest current that can exist within the voltage range at the rated output. The power factor and speed specified on the rating plate apply at 400 V 50 Hz and 460 V 60 Hz.

Single-speed motors of size 160 to 280 are stamped with 50 and 60 Hz at voltage code S and D. The rating plate is arranged in the form of a table with values for current, power factor and motor speed at six voltages.

Motor sizes 56 to 71

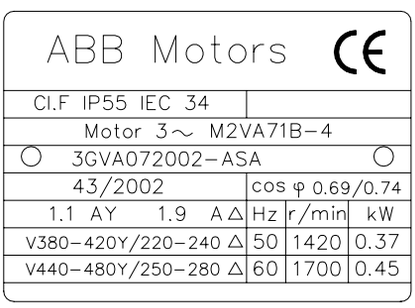

Motor sizes 80

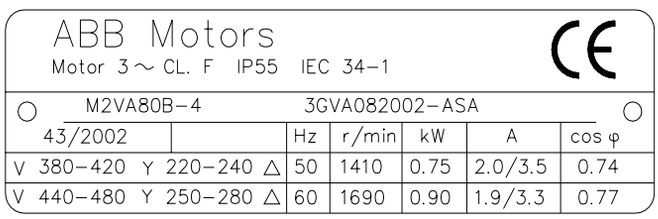

Motor sizes 90 to 100

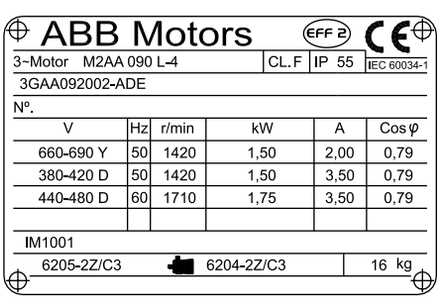

Motor sizes 112 to 132

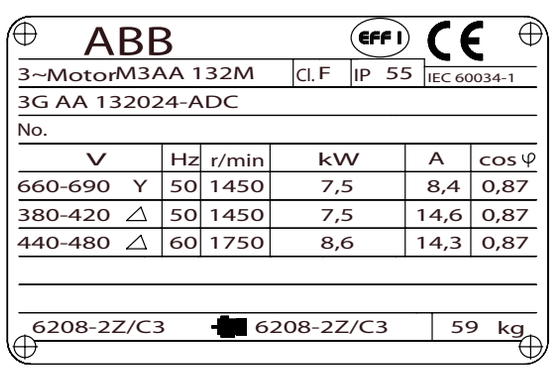

Motor sizes 160 to 280

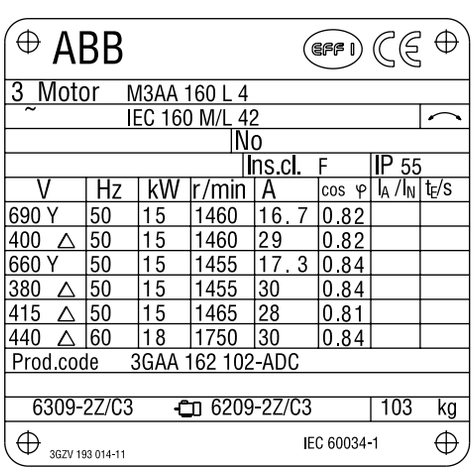

Ordering information

When placing an order, please state the following minimum data in the order, as in the example.

The product code of the motor is composed in accordance with the following example.

Motor type	M3AA 112 MB
Pole number	4
Mounting arrangement (IM-code)	IM B3 (IM 1001)
Rated output	5.5 kW
Product code	3GAA 112002-ACD
Variant codes if needed	

Motor size

A	B	C	D, E, F
M3AA	112 MB	3GAA 112 002	- ADC, 122, 043, etc.

1 2 3 4 5 6 7 8 9 10 11 12 13 14...

A Motor type
B Motor size
C Product code
D Code for mounting arrangement
E Voltage and frequency code
F Generation code followed by variant codes

Explanation of the product code

Positions 1 to 4
3GAA/3GVA =
Totally enclosed motor with aluminum stator frame

Position 4
Type of rotor
A = Squirrel cage rotor

Positions 5 and 6
IEC size

05 = 56	**13** = 132
06 = 63	**16** = 160
07 = 71	**18** = 180
08 = 80	**20** = 200
09 = 90	**22** = 225
10 = 100	**25** = 250
11 = 112	**28** = 280

Position 7
Pole pairs
1 = 2 poles
2 = 4 poles
3 = 6 poles
4 = 8 poles
5 = 10 poles
6 = 12 poles
7 = > 12 poles
8 = Two-speed motors
9 = Multi-speed motors

Positions 8 to 10
Running number

Position 11
- (dash)

Position 12
Mounting arrangement
A = Foot-mounted motor
B = Flange-mounted motor. Large flange with clearance holes.
C = Flange-mounted motor. Small flange with tapped holes.
F = Foot- and flange-mounted motor. Special flange.
H = Foot- and flange-mounted motor. Large flange with clearance holes.
J = Foot- and flange-mounted motor. Small flange with tapped holes.
N = Flange-mounted (CI ring flange FF)
P = Foot-and flange-mounted motor (CI ring flange FF)
V = Flange-mounted motor. Special flange.

Position 13
Voltage and frequency: See tables below

Position 14
Version **A,B,C...** =
Generation code followed by variant codes

Code letters for supplementing the product code - single speed motors

Motor size	Code letter for voltage and frequency Direct start or, with Δ-connection, also Y/Δ-start S 50 Hz	60 Hz	D 50 Hz	60 Hz	H 50 Hz	E 50 Hz	F 50 Hz	T 50 Hz	U 50 Hz	X
56-100	220-240 VΔ 380-420 VY	440-480 VY	380-420 VΔ 660-690 VY	440-480 VΔ -	-	500 VΔ[1]	500 VY	660 VΔ[1]	690 VΔ[1]	Other rated voltage, connection or frequency, 690 V maximum
112-132	220-240 VΔ 380-420 VY	- 440-480 VY	380-420 VΔ 660-690 VY	440-480 VΔ -	415 VΔ	500 VΔ	500 VY	660 VΔ	690 VΔ	
160-280	220, 230 VΔ 380,400,415 VY	- 440 VY	380,400,415VΔ 660, 690 VY	440 VΔ -	415 VΔ	500 VΔ	500 VY	660 VΔ	690 VΔ	

[1]) On request.

Code letters for supplementing the product code - two-speed motors

Motor size	Code letter for voltage and frequency A	S	B	D	H	E	X
56-100	-	220-230 V	-	380-400 V	400-415 V	500 V	Other rated voltage or frequency, 690 V maximum
112-132	-	220-230 V	-	380-400 V	400-415 V	500 V	
160-280	220 V	230 V	380 V	400 V	415 V	500 V	

General purpose aluminum motors

Technical data for totally enclosed squirrel cage three phase motors

IP 55 – IC 411 – Insulation class F, temperature rise class B

Output kW		Motor type		Product code		Speed r/min	Efficiency Full load 100%	Efficiency 3/4 load 75%	Power factor cos φ 100%	Current I_N A	Current I_s / I_N	Torque T_N Nm	Torque T_s / T_N	Torque T_{max} / T_N
3000 r/min = 2-poles						**400 V 50 Hz**				**Basic design**				
0.09		**M2VA**	**56 A**	3GVA	051 001-••A	2820	59.8	53.3	0.69	0.32	3.9	0.31	2.9	2.7
0.12		**M2VA**	**56 B**	3GVA	051 002-••A	2840	67.2	63.8	0.64	0.41	4.1	0.41	3.2	2.8
0.18		**M2VA**	**63 A**	3GVA	061 001-••A	2820	73.7	70.6	0.64	0.56	4.2	0.62	3.5	3.1
0.25		**M2VA**	**63 B**	3GVA	061 002-••A	2810	77.5	75.8	0.71	0.66	4.5	0.87	3.6	3.3
0.37		**M2VA**	**71 A**	3GVA	071 001-••C	2840	77.1	76.5	0.72	1	5.5	1.25	3.8	3.9
0.55		**M2VA**	**71 B**	3GVA	071 002-••C	2830	79.2	78.2	0.76	1.35	5.7	1.86	3.6	3.7
0.75		**M2VA**	**80 A**	3GVA	081 001-••B	2870	81.2	79.3	0.75	1.8	6.2	2.49	2.9	3.6
1.1		**M2VA**	**80 B**	3GVA	081 002-••B	2850	81.4	79.5	0.78	2.5	6.1	3.69	2.3	3.5
1.5		**M2AA**	**90 S**	3GAA	091 001-••E	2870	80.1	76.2	0.82	3.35	5.5	5	2.4	3.0
2.2		**M2AA**	**90 L**	3GAA	091 002-••E	2880	83.6	83.9	0.87	4.37	7.0	7.5	2.7	3.0
3		**M2AA**	**100 L**	3GAA	101 001-••E	2900	86.0	84.1	0.88	5.95	7.5	10	2.7	3.6
4		**M2AA**	**112 M**	3GAA	111 001-••A	2850	86.0	86.0	0.91	7.4	7.5	13.4	2.8	3.0
5.5		**M2AA**	**132 SA**	3GAA	131 001-••A	2855	86.0	86.0	0.88	10.5	6.8	18.3	2.7	3.6
7.5		**M2AA**	**132 SB**	3GAA	131 002-••A	2855	87.0	87.0	0.90	13.9	7.2	25	3.2	3.8
11	2)	**M2AA**	**160 MA**	3GAA	161 111-••A	2915	88.4	88.9	0.89	20.5	6.1	36	2.1	2.5
15	2)	**M2AA**	**160 M**	3GAA	161 112-••A	2900	89.5	89.9	0.90	27	6.1	49.4	2.4	2.6
18.5	2)	**M2AA**	**160 L**	3GAA	161 113-••A	2915	90.2	90.5	0.91	32.5	6.8	61	2.6	3.0
22	2)	**M2AA**	**180 M**	3GAA	181 111-••A	2925	91.2	91.3	0.89	39	7.9	72	2.7	3.4
30	2)	**M2AA**	**200 LA**	3GAA	201 011-••A	2945	92.0	92.0	0.88	53	7.9	97	3.0	3.7
37	2) 3)	**M2AA**	**200 L**	3GAA	201 012-••A	2945	92.8	92.9	0.89	65	8.2	120	3.1	3.6
45		**M2AA**	**225 M**	3GAA	221 011-••A	2940	93.0	93.0	0.88	80	7.7	146	2.8	3.0
55	2)	**M2AA**	**250 M**	3GAA	251 011-••A	2960	93.5	93.8	0.90	95	7.3	177	2.8	3.0

1) Temperature rise class F.
2) Temperature rise class F for 380 V 50 Hz.
3) Temperature rise class F for 415 V 50 Hz.

The bullets in the product code indicate choice of mounting arrangement, voltage and frequency, generation code (see ordering information page).

General purpose aluminum motors

Technical data for totally enclosed squirrel cage three phase motors

IP 55 – IC 411 – Insulation class F, temperature rise class B

Output kW	Motor type		Speed r/min	Effi-ciency %	Power factor cos φ	Current I_N A	Speed r/min	Effi-ciency %	Power factor cos φ	Current I_N A	Moment of inertia J=1/4 GD² kgm²	Weight kg	Sound pressure level L_P dB(A)
3000 r/min = 2-poles			**380 V 50 Hz**				**415 V 50 Hz**						
0.09	**M2VA**	**56 A**	2805	58.6	0.72	0.32	2830	57.8	0.65	0.34	0.00011	3.2	48
0.12	**M2VA**	**56 B**	2825	69.2	0.68	0.4	2850	64.5	0.59	0.45	0.00012	3.4	48
0.18	**M2VA**	**63 A**	2815	74.6	0.69	0.53	2830	72.5	0.60	0.58	0.00013	3.9	54
0.25	**M2VA**	**63 B**	2800	78.5	0.75	0.64	2830	76.2	0.67	0.69	0.00016	4.4	54
0.37	**M2VA**	**71 A**	2830	77.3	0.75	1	2855	75.6	0.68	1.05	0.0004	5.5	58
0.55	**M2VA**	**71 B**	2820	80.2	0.81	1.31	2845	77.7	0.73	1.38	0.00045	6.5	58
0.75	**M2VA**	**80 A**	2850	82.2	0.80	1.73	2880	79.2	0.68	1.9	0.000722	9	60
1.1	**M2VA**	**80 B**	2830	81.1	0.84	2.47	2870	80.2	0.74	2.6	0.000763	11	60
1.5	**M2AA**	**90 S**	2850	79.7	0.88	3.4	2890	79.8	0.79	3.4	0.0019	13	63
2.2	**M2AA**	**90 L**	2860	83.0	0.89	4.6	2890	83.3	0.84	4.2	0.0024	16	63
3	**M2AA**	**100 L**	2890	86.0	0.90	6.15	2910	86.0	0.85	5.95	0.0041	21	65
4	**M2AA**	**112 M**	2830	85.0	0.92	7.8	2865	86.5	0.90	7.2	0.01	25	63
5.5	**M2AA**	**132 SA**	2840	85.0	0.90	10.9	2865	86.5	0.87	10.2	0.014	37	69
7.5	**M2AA**	**132 SB**	2850	86.0	0.91	14.7	2870	87.5	0.88	13.6	0.016	42	69
11 [2]	**M2AA**	**160 MA**	2905	87.9	0.90	21.5	2920	88.7	0.88	20	0.039	73	73
15 [2]	**M2AA**	**160 M**	2890	88.9	0.91	28.5	2905	89.8	0.90	26	0.047	84	73
18.5 [2]	**M2AA**	**160 L**	2905	89.2	0.91	34.5	2925	90.4	0.90	31.5	0.053	94	73
22 [2]	**M2AA**	**180 M**	2915	90.5	0.91	40.5	2930	91.4	0.87	38.5	0.06	111	75
30 [2]	**M2AA**	**200 LA**	2940	91.4	0.89	56	2950	92.1	0.86	52	0.094	139	75
37 [2] [3]	**M2AA**	**200 L**	2940	92.3	0.91	67	2950	92.9	0.88	63	0.115	170	75
45	**M2AA**	**225 M**	2940	93.2	0.89	83	2950	93.8	0.87	78	0.21	209	75
55 [2]	**M2AA**	**250 M**	2955	93.9	0.90	100	2965	94.3	0.88	93	0.31	277	74

Recalculation factors

Recalculation factors for current at rated voltages other than 400 V 50 Hz.			
Rated voltage at 50 Hz and motor wound for	Recalculation factor	Rated voltage at 50 Hz and motor wound for	Recalculation factor
220 V	1.82	**500 V**	0.80
230 V	1.74	**660 V**	0.61
415 V	0.96	**690 V**	0.58

General purpose aluminum motors

Technical data for totally enclosed squirrel cage three phase motors

IP 55 – IC 411 – Insulation class F, temperature rise class B

Output kW		Motor type		Product code		Speed r/min	Efficiency Full load 100%	Efficiency 3/4 load 75%	Power factor cos φ 100%	Current I_N A	Current I_s / I_N	Torque T_N Nm	Torque T_s / T_N	Torque T_{max} / T_N
1500 r/min = 4-poles						**400 V 50 Hz**				**Basic design**				
0.06		**M2VA**	**56 A**	3GVA	052 001-••A	1340	51.1	45.8	0.67	0.26	2.5	0.43	2.2	2.2
0.09		**M2VA**	**56 B**	3GVA	052 002-••A	1370	55.5	50.2	0.62	0.38	2.8	0.63	2.9	2.9
0.12		**M2VA**	**63 A**	3GVA	062 001-••A	1400	63.7	58.4	0.59	0.46	3.1	0.82	2.6	2.6
0.18		**M2VA**	**63 B**	3GVA	062 002-••A	1380	65.6	62.1	0.64	0.63	3.1	1.25	2.5	2.6
0.25		**M2VA**	**71 A**	3GVA	072 001-••C	1410	70.4	69.1	0.71	0.74	4.3	1.71	2.7	2.9
0.37		**M2VA**	**71 B**	3GVA	072 002-••C	1420	74.6	72.1	0.69	1.05	4.4	2.51	2.6	2.8
0.55		**M2VA**	**80 A**	3GVA	082 001-••B	1390	75.3	73.1	0.76	1.4	4.6	3.75	2.6	2.9
0.75		**M2VA**	**80 B**	3GVA	082 002-••B	1410	78.2	75.6	0.74	1.9	4.7	5.08	3.5	3.9
1.1		**M2AA**	**90 S**	3GAA	092 001-••E	1410	77.5	76.4	0.81	2.59	5.0	7.5	2.2	2.7
1.5		**M2AA**	**90 L**	3GAA	092 002-••E	1420	80.3	78.1	0.79	3.45	5.0	10	2.4	2.9
2.2		**M2AA**	**100 LA**	3GAA	102 001-••E	1430	83.0	82.7	0.81	4.8	5.5	15	2.4	2.9
3		**M2AA**	**100 LB**	3GAA	102 002-••E	1430	85.0	83.9	0.81	6.48	5.5	20	2.5	2.9
4		**M2AA**	**112 M**	3GAA	112 001-••A	1435	84.5	85.5	0.80	8.6	7.0	27	2.8	3.0
5.5		**M2AA**	**132 S**	3GAA	132 001-••A	1450	87.0	87.0	0.83	11.1	7.3	36	2.2	3.0
7.5		**M2AA**	**132 M**	3GAA	132 002-••A	1450	88.0	88.0	0.83	14.8	7.9	49	2.5	3.2
11	[2]	**M2AA**	**160 M**	3GAA	162 111-••A	1460	89.1	89.8	0.81	22	6.5	72	2.7	2.6
15	[2]	**M2AA**	**160 L**	3GAA	162 112-••A	1460	90.4	91.0	0.82	29	7.1	98	2.7	3.3
18.5	[2]	**M2AA**	**180 M**	3GAA	182 111-••A	1460	91.1	91.5	0.81	36.5	7.6	121	3.1	3.5
22	[2]	**M2AA**	**180 L**	3GAA	182 112-••A	1460	91.8	92.3	0.82	42	7.9	143	3.0	3.8
30	[2]	**M2AA**	**200 L**	3GAA	202 011-••A	1470	92.0	92.1	0.80	59	7.8	195	3.0	3.4
37	[2]	**M2AA**	**225 S**	3GAA	222 011-••A	1475	92.8	93.0	0.85	68	6.8	240	3.0	3.1
45	[2]	**M2AA**	**225 M**	3GAA	222 012-••A	1475	93.0	93.1	0.84	84	8.1	291	3.5	3.2
55	[2]	**M2AA**	**250 M**	3GAA	252 011-••A	1475	93.7	94.3	0.84	98	6.8	356	2.5	2.6

[2] Temperature rise class F for 380 V 50 Hz.

General purpose aluminum motors

Technical data for totally enclosed squirrel cage three phase motors

IP 55 – IC 411 – Insulation class F, temperature rise class B

Output kW		Motor type		Speed r/min	Effi-ciency %	Power factor cos φ	Current I_N A	Speed r/min	Effi-ciency %	Power factor cos φ	Current I_N A	Moment of inertia J=1/4 GD² kgm²	Weight kg	Sound pressure level L_P dB(A)
1500 r/min = 4-poles				**380 V 50 Hz**				**415 V 50 Hz**						
0.06		**M2VA**	**56 A**	1335	50.5	0.70	0.26	1360	49.9	0.63	0.28	0.00017	3.2	36
0.09		**M2VA**	**56 B**	1360	57.1	0.66	0.37	1390	54.9	0.58	0.4	0.00018	3.4	36
0.12		**M2VA**	**63 A**	1390	63.1	0.63	0.44	1400	62.5	0.55	0.49	0.00019	4	40
0.18		**M2VA**	**63 B**	1370	66.9	0.67	0.63	1400	64.3	0.59	0.67	0.00026	4.5	40
0.25		**M2VA**	**71 A**	1400	69.9	0.74	0.75	1420	69.2	0.67	0.77	0.00066	5.5	45
0.37		**M2VA**	**71 B**	1410	74.6	0.73	1.02	1430	73.4	0.65	1.1	0.00089	6.5	45
0.55		**M2VA**	**80 A**	1380	75.5	0.82	1.35	1400	73.8	0.68	1.55	0.001257	9	50
0.75		**M2VA**	**80 B**	1400	78.7	0.81	1.8	1410	76.0	0.67	2.05	0.001565	10.5	50
1.1		**M2AA**	**90 S**	1410	76.3	0.83	2.66	1430	77.7	0.76	2.6	0.0032	13	50
1.5		**M2AA**	**90 L**	1420	79.9	0.82	3.5	1430	80.3	0.77	3.45	0.0043	16	50
2.2		**M2AA**	**100 LA**	1430	83.0	0.83	4.83	1430	83.0	0.78	4.85	0.0069	21	64
3		**M2AA**	**100 LB**	1430	85.0	0.85	6.58	1430	85.0	0.77	6.55	0.0082	24	66
4		**M2AA**	**112 M**	1425	84.0	0.80	8.9	1440	85.0	0.75	8.8	0.015	27	56
5.5		**M2AA**	**132 S**	1445	86.0	0.85	11.5	1455	87.5	0.81	10.9	0.031	40	59
7.5		**M2AA**	**132 M**	1445	87.0	0.85	15.3	1455	88.0	0.81	14.5	0.038	48	59
11	2)	**M2AA**	**160 M**	1450	88.1	0.83	23	1465	89.2	0.79	22	0.067	75	62
15	2)	**M2AA**	**160 L**	1455	89.5	0.84	30	1465	90.5	0.80	29	0.088	92	62
18.5	2)	**M2AA**	**180 M**	1455	90.4	0.83	37.5	1465	91.2	0.79	36.5	0.102	110	64
22	2)	**M2AA**	**180 L**	1455	91.1	0.84	43.5	1465	91.9	0.81	41.5	0.127	128	64
30	2)	**M2AA**	**200 L**	1470	92.3	0.82	60	1475	92.6	0.77	58	0.225	177	67
37	2)	**M2AA**	**225 S**	1470	92.4	0.86	71	1475	93.2	0.83	67	0.35	216	68
45	2)	**M2AA**	**225 M**	1470	93.2	0.85	87	1475	93.8	0.82	83	0.41	237	68
55	2)	**M2AA**	**250 M**	1470	93.3	0.86	103	1475	94.1	0.84	95	0.5	286	66

Recalculation factors

Recalculation factors for current at rated voltages other than 400 V 50 Hz.			
Rated voltage at 50 Hz and motor wound for	Recalculation factor	Rated voltage at 50 Hz and motor wound for	Recalculation factor
220 V	1.82	**500 V**	0.80
230 V	1.74	**660 V**	0.61
415 V	0.96	**690 V**	0.58

General purpose aluminum motors

Technical data for totally enclosed squirrel cage three phase motors

EFFI

IP 55 – IC 411 – Insulation class F, temperature rise class B

Output kW		Motor type		Product code		Speed r/min	Efficiency Full load 100%	Efficiency 3/4 load 75%	Power factor cos φ 100%	Current I_N A	Current I_s/I_N	Torque T_N Nm	Torque T_s/T_N	Torque T_{max}/T_N
3000 r/min = 2-poles						**400 V 50 Hz**				**Basic design**				
1.1		**M3VA**	**80 C**	3GVA	081 313-••B	2850	82.8	82.6	0.85	2.25	8.1	3.69	4.2	3.5
1.5		**M3AA**	**90 L**	3GAA	091 312-••E	2900	85.9	86.5	0.87	3.2	7.7	5	2.7	3.6
2.2		**M3AA**	**90 LB**	3GAA	091 313-••E	2880	85.8	87.1	0.87	4.4	7.4	7.3	3.0	3.6
3		**M3AA**	**100 LB**	3GAA	101 312-••E	2920	87.6	87.5	0.86	5.9	10.0	9.9	3.9	4.9
4		**M3AA**	**112 M**	3GAA	111 022-••C	2860	87.7	89.4	0.93	7.1	7.5	13.4	2.6	3.4
5.5		**M3AA**	**132 SA**	3GAA	131 023-••C	2900	88.6	88.9	0.88	10.1	9.2	18.1	3.8	4.5
7.5		**M3AA**	**132 SB**	3GAA	131 024-••C	2915	90.9	91.3	0.90	13.3	11.0	24.6	5.1	5.2
11		**M3AA**	**160 MA**	3GAA	161 101-••C	2930	91.0	91.2	0.88	20	6.2	36	2.1	2.8
15		**M3AA**	**160 M**	3GAA	161 102-••C	2920	91.3	91.7	0.90	26.5	6.4	49	2.3	2.7
18.5		**M3AA**	**160 L**	3GAA	161 103-••C	2920	92.4	93.1	0.91	32	7.2	61	2.6	2.9
22		**M3AA**	**180 M**	3GAA	181 101-••C	2930	92.8	93.3	0.89	38.5	7.2	71	2.7	3.0
30		**M3AA**	**200 MLA**	3GAA	201 001-••C	2955	93.2	93.2	0.88	53	8.5	97	2.9	3.1
37		**M3AA**	**200 MLB**	3GAA	201 002-••C	2950	93.6	93.7	0.89	64	7.2	120	2.3	2.9
45		**M3AA**	**225 SMB**	3GAA	221 001-••C	2960	94.1	93.9	0.88	79	7.7	145	2.5	2.9
55		**M3AA**	**250 SMA**	3GAA	251 001-••C	2970	94.2	93.8	0.89	95	7.9	177	2.4	3.0
75		**M3AA**	**280 SMA**	3GAA	281 001-••C	2970	94.7	94.4	0.90	127	8.2	241	2.7	3.2
90	1)	**M3AA**	**280 SMB**	3GAA	281 002-••C	2970	95.4	94.8	0.90	152	8.3	290	2.7	3.4
3000 r/min = 2-poles						**400 V 50 Hz**				**High-output design**				
0.37		**M2VA**	**63 BB**	3GVA	061 003-••A	2800	73.6	73.1	0.81	0.9	3.5	1.29	2.3	2.2
0.68		**M2VA**	**71 BB**	3GVA	071 003-••C	2800	78.9	77.4	0.82	1.59	5.2	2.33	3.2	3.3
0.75		**M2VA**	**71 BC**	3GVA	071 004-••C	2800	78.5	77.9	0.85	1.7	5.1	2.57	3.1	3.2
1.5		**M2VA**	**80 C**	3GVA	081 003-••B	2840	82.4	82.2	0.83	3.16	5.5	5.13	2.8	3.1
2.7	1)	**M3AA**	**90 LB**	3GAA	091 003-••E	2860	80.7	83.5	0.86	5.7	7.0	9	2.6	3.0
4	1)	**M3AA**	**100 LB**	3GAA	101 002-••E	2900	85.0	84.3	0.86	8.1	7.5	13	2.7	3.6
5.5	1)	**M3AA**	**112 MB**	3GAA	111 002-••C	2855	86.5	86.5	0.93	9.9	7.3	18.4	2.6	3.5
9.2	1)	**M3AA**	**132 SBB**	3GAA	131 004-••C	2840	86.8	88.3	0.92	16.8	8.5	31	3.3	3.6
11	1)	**M3AA**	**132 SC**	3GAA	131 003-••C	2835	87.0	87.0	0.93	19.6	8.0	37	3.2	3.3
22	1)	**M3AA**	**160 LB**	3GAA	161 104-••C	2920	92.0	93.0	0.91	38	6.9	72	2.3	2.9
30		**M3AA**	**180 LB**	3GAA	181 102-••C	2945	93.7	94.0	0.89	53	7.8	97	2.7	3.0
45		**M3AA**	**200 MLC**	3GAA	201 003-••C	2950	94.1	94.5	0.89	78	8.2	146	3.0	3.2
55		**M3AA**	**225 SMC**	3GAA	221 002-••C	2960	94.5	94.6	0.89	95	7.3	177	2.8	3.0
55	1)	**M3AA**	**200 MLD**	3GAA	201 004-••C	2940	94.0	94.4	0.89	95	7.9	179	3.1	3.1
75		**M3AA**	**250 SMB**	3GAA	251 002-••C	2970	94.7	94.4	0.90	127	8.2	241	2.7	3.2
80	1)	**M3AA**	**225 SMD**	3GAA	221 003-••C	2960	94.7	94.7	0.86	143	7.5	258	2.9	3.1
95	1)	**M3AA**	**250 SMC**	3GAA	251 003-••C	2965	95.4	95.6	0.90	160	8.0	306	2.6	3.1

1) Temperature rise class F.

2) On request.

The bullets in the product code indicate choice of mounting arrangement, voltage and frequency, generation code (see ordering information page).

General purpose aluminum motors

Technical data for totally enclosed squirrel cage three phase motors

IP 55 – IC 411 – Insulation class F, temperature rise class B

Output kW		Motor type		Speed r/min	Effi-ciency %	Power factor cos φ	Current I_N A	Speed r/min	Effi-ciency %	Power factor cos φ	Current I_N A	Moment of inertia J=1/4 GD² kgm²	Weight kg	Sound pressure level L_P dB(A)
3000 r/min = 2-poles				**380 V 50 Hz**				**415 V 50 Hz**						
1.1		**M3VA**	**80 C**	2830	81.1	0.88	2.35	2870	81.2	0.80	2.35	0.001093	11	60
1.5		**M3AA**	**90 L**	2880	85.1	0.87	3.4	2910	85.9	0.84	3.1	0.0024	16	63
2.2		**M3AA**	**90 LB**	2860	85.1	0.88	4.5	2890	86.1	0.84	4.3	0.0027	18	63
3		**M3AA**	**100 LB**	2910	87.5	0.87	6.1	2930	87.7	0.83	5.8	0.005	25	62
4		**M3AA**	**112 M**	2860	86.7	0.93	7.6	2860	88.0	0.93	6.9	0.012	33	63
5.5		**M3AA**	**132 SA**	2900	88.6	0.89	10.7	2900	88.8	0.86	9.9	0.016	42	69
7.5		**M3AA**	**132 SB**	2915	90.5	0.90	13.9	2915	91.2	0.90	12.9	0.022	56	69
11		**M3AA**	**160 MA**	2915	90.8	0.89	20.5	2935	91.0	0.86	19.4	0.039	73	69
15		**M3AA**	**160 M**	2905	91.0	0.90	27.5	2925	91.4	0.89	25.5	0.047	84	69
18.5		**M3AA**	**160 L**	2910	92.0	0.91	33.5	2930	92.6	0.90	31	0.053	94	69
22		**M3AA**	**180 M**	2930	92.4	0.90	40.5	2945	93.0	0.88	37.5	0.077	119	69
30		**M3AA**	**200 MLA**	2955	93.0	0.89	55	2960	93.3	0.86	52	0.15	175	72
37		**M3AA**	**200 MLB**	2950	93.4	0.89	68	2955	93.7	0.87	63	0.18	200	72
45		**M3AA**	**225 SMB**	2955	94.0	0.89	82	2965	94.2	0.87	77	0.26	235	74
55		**M3AA**	**250 SMA**	2960	94.1	0.89	100	2970	94.2	0.88	92	0.49	285	75
75		**M3AA**	**280 SMA**	2965	94.6	0.90	134	2970	94.7	0.89	123	0.57	375	75
90	1)	**M3AA**	**280 SMB**	2965	95.3	0.89	158	2970	95.4	0.91	148	0.59	390	75
3000 r/min = 2-poles				**380 V 50 Hz**				**415 V 50 Hz**						
0.37		**M2VA**	**63 BB**	2790	71.6	0.84	0.92	2820	72.4	0.77	0.94	0.00036	4.9	54
0.68		**M2VA**	**71 BB**	2790	77.4	0.85	1.6	2810	77.4	0.78	1.63	0.00045	6.5	58
0.75		**M2VA**	**71 BC**	2790	76.0	0.87	1.75	2810	77.0	0.78	1.8	0.00045	6.5	58
1.5		**M2VA**	**80 C**	2800	80.9	0.88	3.2	2820	83.2	0.81	3.1	0.001093	11.5	60
2.7	1)	**M3AA**	**90 LB**	2840	80.2	0.89	5.8	2870	80.6	0.83	5.7	0.0027	18	68
4	1)	**M3AA**	**100 LB**	2890	85.0	0.88	8.3	2910	85.0	0.84	7.8	0.005	25	68
5.5	1)	**M3AA**	**112 MB**	2835	85.5	0.93	10.5	2865	87.5	0.92	9.5	0.012	33	63
9.2	1)	**M3AA**	**132 SBB**	2830	85.8	0.92	17.6	2850	87.4	0.93	16.2	0.02	50	69
11	1)	**M3AA**	**132 SC**	2815	86.5	0.93	21	2845	88.0	0.93	18.9	0.022	56	69
22	1)	**M3AA**	**160 LB**	2910	91.6	0.91	40	2925	92.4	0.90	37	0.058	100	69
30		**M3AA**	**180 LB**	2940	93.9	0.90	55	2950	93.8	0.87	52	0.092	137	70
45		**M3AA**	**200 MLC**	2945	94.0	0.89	82	2955	94.2	0.88	76	0.19	205	72
55		**M3AA**	**225 SMC**	2950	94.3	0.89	100	2965	94.7	0.88	92	0.29	260	74
55	1)	**M3AA**	**200 MLD**	2)								0.2	215	
75		**M3AA**	**250 SMB**	2965	94.6	0.90	134	2970	94.7	0.89	123	0.57	375	75
80	1)	**M3AA**	**225 SMD**	2)								0,3	275	74
95	1)	**M3AA**	**250 SMC**	2)								0,59	345	75

Recalculation factors

Recalculation factors for current at rated voltages other than 400 V 50 Hz.

Rated voltage at 50 Hz and motor wound for	Recalculation factor	Rated voltage at 50 Hz and motor wound for	Recalculation factor
220 V	1.82	**500 V**	0.80
230 V	1.74	**660 V**	0.61
415 V	0.96	**690 V**	0.58

2

General purpose aluminum motors

Technical data for totally enclosed squirrel cage three phase motors

IP 55 – IC 411 – Insulation class F, temperature rise class B

Output kW		Motor type		Product code		Speed r/min	Efficiency Full load 100%	Efficiency 3/4 load 75%	Power factor cos φ 100%	Current I_N A	Current I_s/I_N	Torque T_N Nm	Torque T_s/T_N	Torque T_{max}/T_N
1500 r/min = 4-poles						**400 V 50 Hz**				**Basic design**				
1.1		**M3AA**	**90 L**	3GAA	092 312-••E	1420	83.9	84.3	0.80	2.4	6.1	7.4	2.9	3.4
1.5		**M3AA**	**100 LA**	3GAA	102 311-••E	1440	85.6	85.5	0.82	3.2	6.9	10	2.8	3.4
2.2		**M3AA**	**100 LC**	3GAA	102 313-••E	1450	86.8	86.5	0.77	4.8	8.5	14.5	4.0	4.6
3		**M3AA**	**112 MA**	3GAA	112 021-••C	1455	87.5	87.8	0.81	6.2	7.9	19.7	2.7	3.7
4		**M3AA**	**112 M**	3GAA	112 022-••C	1455	88.3	88.6	0.76	8.6	8.5	26.3	3.3	4.3
5.5		**M3AA**	**132 S**	3GAA	132 023-••C	1460	89.3	90.5	0.84	10.6	7.0	36.2	2.2	2.8
7.5		**M3AA**	**132 M**	3GAA	132 024-••C	1450	90.3	91.0	0.87	14	7.8	49	2.2	3.1
11		**M3AA**	**160 M**	3GAA	162 101-••C	1460	92.0	92.7	0.81	21.5	7.8	72	3.3	3.2
15		**M3AA**	**160 L**	3GAA	162 102-••C	1460	91.8	92.5	0.82	29	8.1	98	3.0	3.6
18.5		**M3AA**	**180 M**	3GAA	182 101-••C	1470	92.3	92.9	0.84	35	7.0	120	2.9	2.9
22		**M3AA**	**180 L**	3GAA	182 102-••C	1470	93.1	93.9	0.85	40	7.1	143	3.1	3.3
30		**M3AA**	**200 MLB**	3GAA	202 001-••C	1475	93.4	94.0	0.84	55	7.5	194	2.5	2.8
37		**M3AA**	**225 SMA**	3GAA	222 001-••C	1480	93.6	93.8	0.84	68	7.6	239	3.1	3.3
45		**M3AA**	**225 SMB**	3GAA	222 002-••C	1480	94.2	94.4	0.83	83	7.6	291	3.4	3.0
55		**M3AA**	**250 SMA**	3GAA	252 001-••C	1480	94.6	94.9	0.86	98	7.6	355	3.1	3.0
75		**M3AA**	**280 SMA**	3GAA	282 001-••C	1480	94.8	95.3	0.86	132	7.1	486	3.2	3.0
90		**M3AA**	**280 SMB**	3GAA	282 002-••C	1475	95.0	95.3	0.87	157	7.7	583	3.3	3.2
1500 r/min = 4-poles						**400 V 50 Hz**				**High-output design**				
0.25		**M2VA**	**63 BB**	3GVA	062 003-••A	1370	70.3	67.4	0.67	0.78	3.2	1.75	2.5	2.1
0.45		**M2VA**	**71 BB**	3GVA	072 003-••C	1390	75.5	75.3	0.76	1.15	4.1	3.11	2.1	2.3
0.55		**M2VA**	**71 C**	3GVA	072 004-••C	1410	77.3	76.9	0.73	1.45	4.8	3.74	2.7	2.9
0.95		**M2VA**	**80 C**	3GVA	082 003-••B	1410	78.9	77.9	0.75	2.35	4.3	6.44	2.9	3.3
1.1		**M2VA**	**80 C**	3GVA	082 004-••B	1390	74.7	76.6	0.77	2.8	4.3	7.8	3.1	2.3
1.85	1)	**M3AA**	**90 L**	3GAA	092 003-••E	1390	79.5	78.1	0.80	4.4	4.5	13	2.2	2.4
2.2	1)	**M3AA**	**90 LB**	3GAA	092 004-••E	1390	80.3	81.0	0.83	4.85	4.5	15	2.2	2.4
4	1)	**M3AA**	**100 LC**	3GAA	102 003-••E	1420	81.0	81.7	0.82	8.65	5.5	27	2.5	2.8
5.5	1)	**M3AA**	**112 MB**	3GAA	112 002-••C	1425	84.5	85.5	0.83	11.4	7.1	37	2.8	3.1
9.2	1)	**M3AA**	**132 MBA**	3GAA	132 004-••C	1445	87.8	89.2	0.87	17.5	7.2	61	2.7	2.7
11	1)	**M3AA**	**132 MB**	3GAA	132 003-••C	1450	88.8	89.9	0.86	21	7.7	72	2.5	2.5
18.5	1)	**M3AA**	**160 LB**	3GAA	162 103-••C	1450	90.5	92.0	0.84	36	6.6	122	2.6	3.0
30	1)	**M3AA**	**180 LB**	3GAA	182 103-••C	1465	92.5	93.3	0.84	56	6.8	196	2.5	2.8
37		**M3AA**	**200 MLB**	3GAA	202 002-••C	1475	93.4	94.0	0.84	68	7.9	240	3.8	3.2
48	1)	**M3AA**	**200 MLC**	3GAA	202 003-••C	1470	93.6	94.1	0.84	89	8.1	311	4.4	3.2
55		**M3AA**	**225 SMC**	3GAA	222 003-••C	1480	94.6	95.0	0.84	100	7.5	356	3.5	3.0
73	1)	**M3AA**	**225 SMD**	3GAA	222 004-••C	1475	94.2	94.5	0.85	132	8.1	473	3.9	3.2
75		**M3AA**	**250 SMB**	3GAA	252 002-••C	1480	94.8	95.3	0.86	132	7.1	486	3.2	3.0
95	1)	**M3AA**	**250 SMC**	3GAA	252 003-••C	1475	94.8	95.5	0.88	165	7.3	616	2.7	3.1

1) Temperature rise class F.

2) On request.

The bullets in the product code indicate choice of mounting arrangement, voltage and frequency, generation code (see ordering information page).

General purpose aluminum motors

Technical data for totally enclosed squirrel cage three phase motors

IP 55 – IC 411 – Insulation class F, temperature rise class B

Output kW		Motor type		Speed r/min	Effi-ciency %	Power factor cos φ	Current I_N A	Speed r/min	Effi-ciency %	Power factor cos φ	Current I_N A	Moment of inertia J=1/4 GD² kgm²	Weight kg	Sound pressure level L_P dB(A)
1500 r/min = 4-poles				**380 V 50 Hz**				**415 V 50 Hz**						
1.1		**M3AA**	**90 L**	1410	83.6	0.82	2.5	1430	84.4	0.78	2.4	0.0043	16	50
1.5		**M3AA**	**100 LA**	1430	85.4	0.84	3.2	1450	86.1	0.79	3.1	0.0069	21	54
2.2		**M3AA**	**100 LC**	1440	86.8	0.80	4.8	1460	86.9	0.74	4.8	0.009	25	54
3		**M3AA**	**112 MA**	1455	87.2	0.81	6.5	1455	87.8	0.80	6.1	0.018	34	56
4		**M3AA**	**112 M**	1455	87.9	0.77	9.0	1455	88.6	0.77	8.2	0.018	34	56
5.5		**M3AA**	**132 S**	1460	88.9	0.84	11.1	1460	89.1	0.84	10.3	0.038	48	59
7.5		**M3AA**	**132 M**	1450	89.9	0.87	14.7	1450	90.3	0.87	13.5	0.048	59	59
11		**M3AA**	**160 M**	1460	91.1	0.83	22.5	1470	91.6	0.82	20.5	0.067	94	62
15		**M3AA**	**160 L**	1455	91.8	0.84	30	1465	91.9	0.81	28	0.102	103	62
18.5		**M3AA**	**180 M**	1465	91.7	0.85	36	1470	92.2	0.83	34	0.161	124	62
22		**M3AA**	**180 L**	1465	92.7	0.86	42	1475	93.3	0.84	38	0.225	161	63
30		**M3AA**	**200 MLB**	1470	93.1	0.85	58	1475	93.5	0.84	54	0.34	205	63
37		**M3AA**	**225 SMA**	1475	93.6	0.84	72	1480	93.8	0.81	68	0.37	215	66
45		**M3AA**	**225 SMB**	1475	94.0	0.85	86	1480	94.2	0.81	82	0.42	230	66
55		**M3AA**	**250 SMA**	1475	94.4	0.86	103	1480	94.5	0.84	96	0.72	275	67
75		**M3AA**	**280 SMA**	1475	94.5	0.87	139	1480	94.8	0.86	128	0.88	380	67
90		**M3AA**	**280 SMB**	1470	95.0	0.89	164	1475	95.1	0.87	153	0.95	405	67
1500 r/min = 4-poles				**380 V 50 Hz**				**415 V 50 Hz**						
0.25		**M2VA**	**63 BB**	1360	70.9	0.71	0.76	1380	69.1	0.63	0.8	0.0003	5	40
0.45		**M2VA**	**71 BB**	1380	75.1	0.80	1.12	1400	74.0	0.72	1.2	0.00089	6.5	45
0.55		**M2VA**	**71 C**	1400	77.0	0.77	1.4	1420	76.1	0.69	1.5	0.0011	7	45
0.95		**M2VA**	**80 C**	1400	79.1	0.81	2.3	1430	76.4	0.66	2.65	0.001948	11	50
1.1		**M2VA**	**80 C**	1380	74.3	0.82	2.7	1400	74.1	0.72	2.9	0.001948	11	50
1.85	1)	**M3AA**	**90 L**	1380	78.8	0.83	4.4	1400	79.5	0.76	4.35	0.0043	16	50
2.2	1)	**M3AA**	**90 LB**	1380	78.4	0.85	5.1	1400	80.8	0.80	4.9	0.0048	17	50
4	1)	**M3AA**	**100 LC**	1410	80.0	0.82	8.8	1420	82.0	0.75	8.7	0.009	25	60
5.5	1)	**M3AA**	**112 MB**	1415	84.5	0.85	11.7	1430	85.5	0.79	11.4	0.018	34	56
9.2	1)	**M3AA**	**132 MBA**	1445	88.0	0.87	18.4	1445	88.3	0.87	16.8	0.048	59	59
11	1)	**M3AA**	**132 MB**	1445	88.2	0.87	22	1455	88.9	0.83	21	0.048	59	59
18.5	1)	**M3AA**	**160 LB**	1440	89.8	0.85	37	1450	90.8	0.83	34	0.102	103	63
30	1)	**M3AA**	**180 LB**	1465	92.2	0.85	58	1470	92.7	0.82	55	0.225	161	63
37		**M3AA**	**200 MLB**	1475	93.3	0.85	71	1475	93.3	0.82	67	0.34	205	63
48	1)	**M3AA**	**200 MLC**	2)								0.38	270	63
55		**M3AA**	**225 SMC**	1475	94.3	0.84	105	1480	94.6	0.82	99	0.49	265	66
73	1)	**M3AA**	**225 SMD**	2)								0.56	290	66
75		**M3AA**	**250 SMB**	1475	94.5	0.87	139	1480	94.8	0.86	128	0.88	335	67

Recalculation factors

Recalculation factors for current at rated voltages other than 400 V 50 Hz.

Rated voltage at 50 Hz and motor wound for	Recalculation factor	Rated voltage at 50 Hz and motor wound for	Recalculation factor
220 V	1.82	**500 V**	0.80
230 V	1.74	**660 V**	0.61
415 V	0.96	**690 V**	0.58

2

General purpose aluminum motors

Technical data for totally enclosed squirrel cage three phase motors

IP 55 – IC 411 – Insulation class F, temperature rise class B

Output kW		Motor type		Product code		Speed r/min	Efficiency Full load 100%	Efficiency 3/4 load 75%	Power factor cos φ 100%	Current I_N A	Current $\frac{I_s}{I_N}$	Torque T_N Nm	Torque $\frac{T_s}{T_N}$	Torque $\frac{T_{max}}{T_N}$
1000 r/min = 6-poles						**400 V 50 Hz**				**Basic design**				
0.09		**M2VA**	**63 A**	3GVA	063 001-••A	910	47.1	42.5	0.56	0.51	2.1	0.95	2.1	2.1
0.12		**M2VA**	**63 B**	3GVA	063 002-••A	910	57.5	54.0	0.58	0.54	2.1	1.27	2.1	2.1
0.18		**M2VA**	**71 A**	3GVA	073 001-••C	920	61.1	57.7	0.69	0.64	2.9	1.88	2.1	2.2
0.25		**M2VA**	**71 B**	3GVA	073 002-••C	920	64.9	62.3	0.65	0.86	3.2	2.61	2.5	2.7
0.37		**M2VA**	**80 A**	3GVA	083 001-••B	925	72.9	70.8	0.72	1.04	3.8	3.82	3.1	3.4
0.55		**M2VA**	**80 B**	3GVA	083 002-••B	925	73.3	71.9	0.71	1.55	3.4	5.68	2.9	3.1
0.75		**M3AA**	**90 S**	3GAA	093 001-••E	930	71.5	70.7	0.67	2.36	4.0	7.5	1.9	2.3
1.1		**M3AA**	**90 L**	3GAA	093 002-••E	930	74.4	72.5	0.69	3.25	4.0	11	2.1	2.4
1.5		**M3AA**	**100 L**	3GAA	103 001-••E	950	80.0	77.0	0.71	3.92	4.5	15	1.9	2.3
2.2		**M3AA**	**112 M**	3GAA	113 001-••C	940	80.5	81.0	0.74	5.4	5.6	22	2.1	2.7
3		**M3AA**	**132 S**	3GAA	133 001-••C	960	84.5	84.8	0.75	6.9	6.5	30	2.1	3.0
4		**M3AA**	**132 MA**	3GAA	133 002-••C	960	85.5	86.1	0.78	8.7	7.1	40	2.6	2.8
5.5		**M3AA**	**132 MB**	3GAA	133 003-••C	955	86.0	87.0	0.78	11.9	7.0	55	2.8	2.8
7.5		**M3AA**	**160 M**	3GAA	163 101-••C	970	89.3	90.4	0.79	15.4	6.6	74	1.9	2.6
11		**M3AA**	**160 L**	3GAA	163 102-••C	970	89.8	90.5	0.78	23	6.9	109	2.1	3.4
15		**M3AA**	**180 L**	3GAA	183 101-••C	970	90.8	91.5	0.78	31	6.8	147	2.0	3.3
18.5		**M3AA**	**200 MLA**	3GAA	203 001-••C	985	91.1	91.7	0.81	36	7.0	180	2.7	2.5
22		**M3AA**	**200 MLB**	3GAA	203 002-••C	980	91.7	92.2	0.81	43	6.8	214	2.9	3.0
30		**M3AA**	**225 SMB**	3GAA	223 001-••C	985	92.8	93.0	0.83	56	7.4	290	3.2	2.8
37		**M3AA**	**250 SMA**	3GAA	253 001-••C	985	93.4	93.7	0.83	69	7.2	358	3.2	2.9
45	[1]	**M3AA**	**280 SMA**	3GAA	283 001-••C	985	93.4	93.7	0.84	83	7.2	436	3.2	2.8
1000 r/min = 6-poles						**400 V 50 Hz**				**High-output design**				
0.15		**M2VA**	**63 BB**	3GVA	063 003-••A	900	56.9	52.1	0.54	0.74	2.2	1.61	2.2	2.3
0.32		**M2VA**	**71 C**	3GVA	073 003-••C	920	64.8	61.6	0.63	1.15	3.2	3.33	2.6	2.8
0.37		**M2VA**	**71 C**	3GVA	073 004-••C	900	60.1	60.4	0.70	1.2	2.6	4.1	2.2	2.0
0.75		**M2VA**	**80 C**	3GVA	083 003-••B	920	67.9	70.5	0.76	2.1	3.4	8.1	2.4	2.2
1.3	[1]	**M3AA**	**90 LB**	3GAA	093 003-••E	910	69.0	69.0	0.71	3.85	4.0	13.5	1.9	2.2
2.2	[1]	**M3AA**	**100 LC**	3GAA	103 002-••E	940	77.0	72.8	0.71	5.9	4.5	22	1.9	2.3
3	[1]	**M3AA**	**112 MB**	3GAA	113 002-••C	935	80.0	81.2	0.76	7.2	5.5	31	2.5	2.7
6.3	[1]	**M3AA**	**132 MC**	3GAA	133 004-••C	960	84.9	85.0	0.75	14.5	7.3	63	2.3	3.1
14	[1]	**M3AA**	**160 LB**	3GAA	163 103-••C	960	89.8	90.1	0.77	29.5	7.0	138	2.5	3.1
18.5	[1]	**M3AA**	**180 LB**	3GAA	183 102-••C	965	90.7	91.7	0.79	37.5	6.1	183	2.1	2.5
30	[1]	**M3AA**	**200 MLC**	3GAA	203 003-••C	980	91.7	92.4	0.81	56	7.3	296	3.6	2.9
37		**M3AA**	**225 SMC**	3GAA	223 002-••C	985	93.0	93.6	0.83	69	7.3	360	3.6	2.8
45	[1]	**M3AA**	**250 SMB**	3GAA	253 002-••C	985	93.4	93.7	0.84	83	7.2	436	3.2	2.8

[1] Temperature rise class F.

The bullets in the product code indicate choice of mounting arrangement, voltage and frequency, generation code (see ordering information page).

General purpose aluminum motors

Technical data for totally enclosed squirrel cage three phase motors

IP 55 – IC 411 – Insulation class F, temperature rise class B

Output kW		Motor type		Speed r/min	Effi-ciency %	Power factor cos φ	Current I_N A	Speed r/min	Effi-ciency %	Power factor cos φ	Current I_N A	Moment of inertia J=1/4 GD² kgm²	Weight kg	Sound pressure level L_P dB(A)
1000 r/min = 6-poles				**380 V 50 Hz**				**415 V 50 Hz**						
0.09		**M2VA**	**63 A**	905	49.6	0.59	0.46	925	44.9	0.52	0.55	0.0002	4	38
0.12		**M2VA**	**63 B**	905	59.1	0.61	0.52	925	54.8	0.54	0.57	0.00027	4.5	38
0.18		**M2VA**	**71 A**	910	60.3	0.73	0.62	930	59.8	0.62	0.7	0.00063	5.5	42
0.25		**M2VA**	**71 B**	910	65.4	0.68	0.85	930	63.6	0.61	0.9	0.00081	6.5	42
0.37		**M2VA**	**80 A**	905	72.7	0.77	1.03	920	71.4	0.66	1.1	0.001842	9	47
0.55		**M2VA**	**80 B**	905	73.1	0.77	1.5	915	71.2	0.65	1.65	0.002176	10	47
0.75		**M3AA**	**90 S**	920	70.6	0.72	2.3	930	70.6	0.64	2.36	0.0032	13	44
1.1		**M3AA**	**90 L**	920	73.9	0.73	3.2	930	74.2	0.66	3.25	0.0043	16	44
1.5		**M3AA**	**100 L**	940	79.0	0.74	3.96	960	80.0	0.67	3.95	0.0082	23	49
2.2		**M3AA**	**112 M**	930	80.0	0.78	5.4	950	80.5	0.71	5.4	0.015	27	54
3		**M3AA**	**132 S**	955	84.0	0.77	7.1	965	84.0	0.72	6.9	0.031	39	61
4		**M3AA**	**132 MA**	955	85.0	0.81	8.9	965	85.5	0.75	8.7	0.038	46	61
5.5		**M3AA**	**132 MB**	950	85.5	0.81	12.2	960	86.0	0.76	11.8	0.045	54	61
7.5		**M3AA**	**160 M**	960	88.7	0.80	16.1	970	89.6	0.77	15.1	0.089	88	59
11		**M3AA**	**160 L**	960	89.4	0.80	23.5	970	90.0	0.76	22.5	0.107	102	59
15		**M3AA**	**180 L**	970	90.9	0.79	32	975	91.1	0.74	31	0.217	151	59
18.5		**M3AA**	**200 MLA**	980	90.8	0.81	38	985	91.1	0.78	36	0.37	165	63
22		**M3AA**	**200 MLB**	980	91.6	0.81	45	985	91.8	0.79	42	0.43	185	63
30		**M3AA**	**225 SMB**	985	92.6	0.83	59	985	92.9	0.82	55	0.64	225	63
37		**M3AA**	**250 SMA**	985	93.3	0.84	72	990	93.5	0.81	67	1.16	280	63
45	1)	**M3AA**	**280 SMA**	985	93.5	0.84	87	985	93.6	0.83	81	1.49	375	63
1000 r/min = 6-poles				**380 V 50 Hz**				**415 V 50 Hz**						
0.15		**M2VA**	**63 BB**	895	55.9	0.59	0.71	915	53.9	0.52	0.8	0.00032	5	38
0.32		**M2VA**	**71 C**	910	65.6	0.67	1.1	930	63.3	0.59	1.2	0.0011	7	42
0.37		**M2VA**	**71 C**	880	59.1	0.75	1.25	920	59.8	0.66	1.2	0.0011	7	42
0.75		**M2VA**	**80 C**	900	66.9	0.80	2.1	930	67.6	0.72	2.2	0.002576	10	47
1.3	1)	**M3AA**	**90 LB**	900	69.0	0.75	3.8	920	69.0	0.67	3.9	0.0048	18	44
2.2	1)	**M3AA**	**100 LC**	930	76.0	0.75	5.9	940	77.0	0.67	5.9	0.009	26	49
3	1)	**M3AA**	**112 MB**	925	79.5	0.79	7.3	940	80.0	0.73	7.2	0.018	33	54
6.3	1)	**M3AA**	**132 MC**	960	84.8	0.75	14.5	965	84.6	0.71	14.4	0.049	59	61
14	1)	**M3AA**	**160 LB**	955	89.7	0.79	30.5	965	89.6	0.75	29.5	0.127	117	62
18.5	1)	**M3AA**	**180 LB**	965	90.1	0.81	39	970	90.9	0.78	36.5	0.237	160	59
30	1)	**M3AA**	**200 MLC**	980	91.5	0.83	57	985	91.9	0.83	52	0.49	200	63
37		**M3AA**	**225 SMC**	980	92.7	0.83	72	985	93.2	0.81	68	0.75	252	63
45	1)	**M3AA**	**250 SMB**	985	93.5	0.84	87	985	93.6	0.83	81	1.49	320	63

Recalculation factors

Recalculation factors for current at rated voltages other than 400 V 50 Hz.

Rated voltage at 50 Hz and motor wound for	Recalculation factor	Rated voltage at 50 Hz and motor wound for	Recalculation factor
220 V	1.82	**500 V**	0.80
230 V	1.74	**660 V**	0.61
415 V	0.96	**690 V**	0.58

General purpose aluminum motors

Technical data for totally enclosed squirrel cage three phase motors

IP 55 – IC 411 – Insulation class F, temperature rise class B

Output kW	Motor type		Product code		Speed r/min	Efficiency Full load 100%	Efficiency 3/4 load 75%	Power factor cos φ 100%	Current I_N A	Current I_s / I_N	Torque T_N Nm	Torque T_s / T_N	Torque T_{max} / T_N
750 r/min = 8-poles					**400 V 50 Hz**				**Basic design**				
0.055	**M2VA**	**63 B**	3GVA	064 002-••A	680	38.3	31.8	0.48	0.45	1.8	0.78	2.1	2.1
0.09	**M2VA**	**71 A**	3GVA	074 001-••C	690	45.8	37.5	0.57	0.52	2.2	1.25	2.3	2.3
0.12	**M2VA**	**71 B**	3GVA	074 002-••C	690	46.4	38.1	0.55	0.69	2.2	1.67	2.5	2.5
0.18	**M2VA**	**80 A**	3GVA	084 001-••B	700	59.9	54.5	0.60	0.75	3.1	2.46	3.2	3.6
0.25	**M2VA**	**80 B**	3GVA	084 002-••B	700	70.7	67.4	0.62	0.85	3.1	3.52	2.9	3.1
0.37	**M3AA**	**90 S**	3GAA	094 001-••E	700	61.5	43.4	0.56	1.6	3.0	5	1.9	2.4
0.55	**M3AA**	**90 L**	3GAA	094 002-••E	690	62.9	56.4	0.57	2.35	3.0	7.5	1.7	2.1
0.75	**M3AA**	**100 LA**	3GAA	104 001-••E	700	72.0	63.6	0.59	2.55	3.5	10	2.1	2.7
1.1	**M3AA**	**100 LB**	3GAA	104 002-••E	700	73.0	68.8	0.64	3.35	3.5	15	2.1	2.7
1.5	**M3AA**	**112 M**	3GAA	114 001-••C	695	74.5	74.6	0.65	4.5	4.1	21	1.9	2.5
2.2	**M3AA**	**132 S**	3GAA	134 001-••C	720	80.5	80.2	0.67	5.9	5.3	29	1.9	2.5
3	**M3AA**	**132 M**	3GAA	134 002-••C	720	82.0	82.0	0.68	7.8	5.5	40	2.4	2.6
4	**M3AA**	**160 MA**	3GAA	164 101-••C	715	84.1	84.7	0.69	10	5.1	53	2.1	2.6
5.5	**M3AA**	**160 M**	3GAA	164 102-••C	710	84.7	85.6	0.70	13.4	5.5	74	2.4	2.6
7.5	**M3AA**	**160 L**	3GAA	164 103-••C	715	86.3	87.3	0.70	18.1	5.4	100	2.4	2.7
11	**M3AA**	**180 L**	3GAA	184 101-••C	720	89.6	90.3	0.76	23.5	5.7	146	2.1	2.5
15	**M3AA**	**200 MLA**	3GAA	204 001-••C	740	91.1	91.6	0.82	29	7.5	196	3.0	3.2
18.5	**M3AA**	**225 SMA**	3GAA	224 001-••C	730	91.1	91.6	0.79	37	6.8	242	2.8	3.1
22	**M3AA**	**225 SMB**	3GAA	224 002-••C	730	91.5	92.2	0.77	45	6.4	287	2.4	2.6
30	**M3AA**	**250 SMA**	3GAA	254 001-••C	735	92.8	93.1	0.79	59	7.3	389	2.2	2.6
37	**M3AA**	**280 SMA**	3GAA	284 001-••C	735	93.0	93.3	0.81	74	7.4	478	2.9	3.1
750 r/min = 8-poles					**400 V 50 Hz**				**High-output design**				
0.18	**M2VA**	**71 C**	3GVA	074 003-••C	680	51.3	49.9	0.61	0.8	2.2	2.6	2.5	2.2
0.37	**M2VA**	**80 C**	3GVA	084 003-••B	690	64.6	65.3	0.69	1.2	3.0	5.3	2.3	2.1
0.75 [1]	**M3AA**	**90 LB**	3GAA	094 003-••E	680	64.0	60.0	0.65	2.65	3.0	10	1.8	2.0
1.5 [1]	**M3AA**	**100 LC**	3GAA	104 003-••E	670	71.0	65.9	0.70	4.4	3.3	21	1.8	2.2
1.9 [1]	**M3AA**	**112 MB**	3GAA	114 002-••C	690	74.0	74.8	0.67	5.6	4.3	26.5	2.0	2.6
3.8 [1]	**M3AA**	**132 MB**	3GAA	134 003-••C	710	80.5	80.7	0.69	9.9	5.2	51	2.3	2.6
8.5 [1]	**M3AA**	**160 LB**	3GAA	164 104-••C	700	85.1	85.7	0.70	21	5.3	114	2.3	2.6
15 [1]	**M3AA**	**180 LB**	3GAA	184 102-••C	720	88.7	89.6	0.76	32.5	6.0	199	2.4	2.6
18.5	**M3AA**	**200 MLB**	3GAA	204 002-••C	735	91.4	91.8	0.81	36	7.3	241	2.6	3.1
30 [1]	**M3AA**	**225 SMC**	3GAA	224 003-••C	735	91.7	92.3	0.79	64	6.7	391	2.8	3.0
37	**M3AA**	**250 SMB**	3GAA	254 002-••C	735	93.0	93.3	0.81	74	7.4	478	2.9	3.1

[1] Temperature rise class F.

The bullets in the product code indicate choice of mounting arrangement, voltage and frequency, generation code (see ordering information page).

General purpose aluminum motors

Technical data for totally enclosed squirrel cage three phase motors

IP 55 – IC 411 – Insulation class F, temperature rise class B

Output kW		Motor type		Speed r/min	Effi-ciency %	Power factor cos φ	Current I_N A	Speed r/min	Effi-ciency %	Power factor cos φ	Current I_N A	Moment of inertia J=1/4 GD² kgm²	Weight kg	Sound pressure level L_P dB(A)
750 r/min = 8-poles				**380 V 50 Hz**				**415 V 50 Hz**						
0.055		**M2VA**	**63 B**	675	41.2	0.50	0.41	690	35.7	0.44	0.5	0.00027	4.5	36
0.09		**M2VA**	**71 A**	680	46.3	0.60	0.5	700	43.8	0.53	0.55	0.00063	5.5	40
0.12		**M2VA**	**71 B**	680	47.7	0.59	0.65	700	44.4	0.53	0.7	0.00081	6.5	40
0.18		**M2VA**	**80 A**	690	61.1	0.64	0.7	705	57.8	0.57	0.77	0.001842	9	45
0.25		**M2VA**	**80 B**	675	70.2	0.66	0.84	690	69.6	0.58	0.87	0.002176	10	45
0.37		**M3AA**	**90 S**	690	62.7	0.59	1.57	700	60.5	0.54	1.7	0.0032	13	43
0.55		**M3AA**	**90 L**	680	64.9	0.61	2.27	690	61.5	0.55	2.43	0.0043	16	43
0.75		**M3AA**	**100 LA**	690	72.0	0.63	2.5	700	71.0	0.55	2.7	0.0069	20	46
1.1		**M3AA**	**100 LB**	700	74.0	0.68	3.3	710	73.0	0.60	3.5	0.0082	23	46
1.5		**M3AA**	**112 M**	685	74.0	0.69	4.6	700	74.0	0.61	4.7	0.016	28	52
2.2		**M3AA**	**132 S**	715	80.0	0.71	5.9	725	80.0	0.65	5.9	0.038	46	56
3		**M3AA**	**132 M**	715	82.0	0.72	7.8	720	82.0	0.68	7.7	0.045	53	56
4		**M3AA**	**160 MA**	710	83.5	0.71	10.2	720	84.1	0.66	9.9	0.072	75	59
5.5		**M3AA**	**160 M**	705	84.0	0.72	13.8	715	85.0	0.68	13.3	0.091	88	59
7.5		**M3AA**	**160 L**	710	85.7	0.72	18.6	715	86.6	0.68	17.8	0.131	118	59
11		**M3AA**	**180 L**	715	89.0	0.77	24.5	720	89.8	0.75	23	0.224	147	59
15		**M3AA**	**200 MLA**	735	91.0	0.83	30	740	91.2	0.79	29	0.45	175	60
18.5		**M3AA**	**225 SMA**	730	91.0	0.79	39	735	91.3	0.76	36	0.61	210	63
22		**M3AA**	**225 SMB**	730	91.0	0.81	47	735	91.7	0.76	44	0.68	225	63
30		**M3AA**	**250 SMA**	735	92.6	0.81	61	740	92.7	0.77	58	1.25	280	63
37		**M3AA**	**280 SMA**	735	92.5	0.82	77	735	92.8	0.81	73	1.52	375	63
750 r/min = 8-poles				**380 V 50 Hz**				**415 V 50 Hz**						
0.18		**M2VA**	**71 C**	670	52.3	0.65	0.8	700	51.4	0.58	0.8	0.0011	7	40
0.37		**M2VA**	**80 C**	670	63.1	0.72	1.2	700	65.1	0.66	1.3	0.002576	11	45
0.75	1)	**M3AA**	**90 LB**	670	64.0	0.69	2.6	690	63.0	0.61	2.7	0.0048	18	43
1.5	1)	**M3AA**	**100 LC**	660	71.0	0.73	4.5	675	70.0	0.65	4.6	0.009	26	46
1.9	1)	**M3AA**	**112 MB**	680	73.8	0.71	5.9	695	73.6	0.65	5.8	0.018	33	52
3.8	1)	**M3AA**	**132 MB**	705	80.0	0.72	10	715	80.5	0.67	9.9	0.049	59	56
8.5	1)	**M3AA**	**160 LB**	695	84.6	0.73	21.5	705	85.3	0.68	20.5	0.131	118	62
15	1)	**M3AA**	**180 LB**	715	88.1	0.78	33.5	720	89.1	0.74	32	0.24	155	62
18.5		**M3AA**	**200 MLB**	735	91.2	0.83	37	735	91.6	0.79	35	0.54	200	60
30	1)	**M3AA**	**225 SMC**	730	91.5	0.80	65	735	91.6	0.77	63	0.8	255	63
37		**M3AA**	**250 SMB**	735	92.5	0.82	77	735	92.8	0.81	73	1.52	320	63

Recalculation factors

Recalculation factors for current at rated voltages other than 400 V 50 Hz.

Rated voltage at 50 Hz and motor wound for	Recalculation factor	Rated voltage at 50 Hz and motor wound for	Recalculation factor
220 V	1.82	**500 V**	0.80
230 V	1.74	**660 V**	0.61
415 V	0.96	**690 V**	0.58

General purpose aluminum motors, premium efficiency

Data acc. to IEC 60034-2, determination of efficiency

IP 55 – IC 411 – Insulation class F, temperature rise class B

Output kW	Motor type		Product code	Speed r/min	Efficiency Full load 100%	Efficiency 3/4 load 75%	Power factor cos φ 100%	Current I_N A	Current I_s/I_N	Torque T_N Nm	Torque T_s/T_N	Torque T_{max}/T_N	Moment of inertia J=1/4 GD² kgm²	Weight kg	Sound pressure level L_P dB(A)
3000 r/min = 2 poles				**400 V 50 Hz**									**Basic design**		
1.5	**M3AA**	**90 L**	3GAA 091 312-••C	2900	85.9	86.5	0.87	3	7.7	5	2.7	3.6	0.002	16	63
2.2	**M3AA**	**90 LB**	3GAA 091 313-••C	2880	85.8	87.1	0.87	4.4	7.4	7.3	3.0	3.6	0.002	18	63
3	**M3AA**	**100 LB**	3GAA 101 312-••C	2920	87.6	87.5	0.86	5.9	10.0	9.9	3.9	4.9	0.005	25	62
4	**M3AA**	**112 M**	3GAA 111 022-••C	2860	87.7	89.4	0.93	7.1	7.5	13.4	2.6	3.4	0.012	33	63
5.5	**M3AA**	**132 SA**	3GAA 131 023-••C	2900	88.6	88.9	0.88	10.3	9.9	18.1	4.0	4.5	0.016	42	69
7.5	**M3AA**	**132 SB**	3GAA 131 024-••C	2915	90.9	91.3	0.90	13.3	11.0	24.6	5.1	5.2	0.022	56	69
11	**M3AA**	**160 MA**	3GAA 161 121-••C	2935	91.5	91.9	0.90	19.2	7.4	36	2.7	2.9	0.047	84	69
15	**M3AA**	**160 M**	3GAA 161 122-••C	2940	92.3	92.7	0.90	26	8.0	49	3.0	3.3	0.053	94	69
18.5	**M3AA**	**160 L**	3GAA 161 123-••C	2935	93.1	93.6	0.89	32.5	8.3	60	3.1	3.3	0.058	100	69
22	**M3AA**	**180 M**	3GAA 181 121-••C	2945	93.2	93.8	0.91	37.5	7.1	71	2.7	2.9	0.092	137	70
30	**M3AA**	**200 MLB**	3GAA 201 021-••C	2950	93.0	93.3	0.90	52	7.9	97	3.0	2.9	0.18	200	72
37	**M3AA**	**200 MLC**	3GAA 201 022-••C	2960	93.9	94.1	0.89	64	8.8	120	3.6	3.3	0.19	205	72
45	**M3AA**	**225 SMC**	3GAA 221 021-••C	2970	94.4	94.4	0.88	78	6.9	145	2.3	2.9	0.29	260	74
55	**M3AA**	**250 SMB**	3GAA 251 021-••C	2970	94.1	94.1	0.91	93	7.5	177	2.5	3.0	0.57	330	75
75	**M3AA**	**250 SMC**	3GAA 251 022-••C	2965	94.8	95.0	0.93	124	7.7	242	2.3	2.8	0.6	345	75
1500 r/min = 4 poles				**400 V 50 Hz**									**Basic design**		
1.1	**M3AA**	**90 L**	3GAA 092 312-••C	1420	83.9	84.3	0.80	2.4	6.1	7.4	2.9	3.4	0.004	16	50
1.5	**M3AA**	**100 LA**	3GAA 102 311-••C	1440	85.6	85.5	0.82	3.2	6.9	10	2.8	3.4	0.006	21	54
2.2	**M3AA**	**100 LC**	3GAA 102 313-••C	1450	86.8	86.5	0.77	4.8	8.5	14.5	4.0	4.6	0.009	25	54
3	**M3AA**	**112 MA**	3GAA 112 021-••C	1455	87.5	87.8	0.81	6.2	7.9	19.7	2.7	3.7	0.018	34	56
4	**M3AA**	**112 M**	3GAA 112 022-••C	1455	88.3	88.6	0.76	8.6	8.5	26.3	3.3	4.3	0.018	34	56
5.5	**M3AA**	**132 S**	3GAA 132 023-••C	1460	89.3	90.5	0.84	10.6	7.0	36.2	2.2	2.8	0.038	48	59
7.5	**M3AA**	**132 M**	3GAA 132 024-••C	1450	90.3	91.0	0.87	14	7.8	49	2.2	3.1	0.048	59	59
11	**M3AA**	**160 M**	3GAA 162 121-••C	1470	91.5	92.1	0.83	21	8.1	72	3.4	3.3	0.091	94	62
15	**M3AA**	**160 L**	3GAA 162 122-••C	1460	91.3	92.1	0.83	28.5	7.6	98	3.3	3.1	0.102	103	62
18.5	**M3AA**	**180 M**	3GAA 182 121-••C	1470	92.5	93.4	0.84	34	6.6	121	2.7	2.8	0.191	141	62
22	**M3AA**	**180 L**	3GAA 182 122-••C	1475	93.2	93.9	0.84	41	7.8	143	3.1	3.4	0.225	161	62
30	**M3AA**	**200 MLB**	3GAA 202 021-••C	1475	93.7	94.3	0.84	55	8.0	194	4.0	3.1	0.34	205	63
37	**M3AA**	**225 SMB**	3GAA 222 021-••C	1480	93.7	94.0	0.85	68	8.1	239	3.9	2.9	0.42	230	66
45	**M3AA**	**225 SMC**	3GAA 222 022-••C	1480	94.4	94.8	0.86	80	8.0	291	3.8	3.2	0.49	265	66
55	**M3AA**	**250 SMB**	3GAA 252 021-••C	1480	94.5	94.9	0.87	96	7.4	356	3.0	3.1	0.88	335	67
55	**M3AA**	**225 SMD**	3GAA 222 023-••C	1480	94.5	94.8	0.86	98	8.5	355	4.3	3.8	0.56	290	66
75	**M3AA**	**250 SMC**	3GAA 252 022-••C	1480	95.2	95.6	0.85	135	8.4	484	3.4	5.1	0.95	360	66

The bullets in the product code indicate choice of mounting arrangement, voltage and frequency, generation code (see ordering information page).

General purpose aluminum motors, premium efficiency

Data acc. to IEC 60034-2, determination of efficiency

IP 55 – IC 411 – Insulation class F, temperature rise class B

Output kW	Motor type		Product code		Speed r/min	Efficiency Full load 100%	Efficiency 3/4 load 75%	Power factor cos φ 100%	Current I_N A	Current I_s/I_N	Torque T_N Nm	Torque T_s/T_N	Torque T_{max}/T_N	Moment of inertia J=1/4 GD² kgm²	Weight kg	Sound pressure level L_p dB(A)
1000 r/min = 6 poles					**400 V 50 Hz**									**Basic design**		
2.2	**M3AA**	**112 M**	3GAA	113 022-••C	945	81.8	82.9	0.76	5.1	6.0	22.3	2.4	2.9	0.018	33	54
3	**M3AA**	**132 S**	3GAA	133 024-••C	965	85.2	86.1	0.79	6.4	7.0	29.8	2.2	2.8	0.038	46	61
4	**M3AA**	**132 MA**	3GAA	133 025-••C	960	86.0	87.3	0.80	8.3	7.0	39.8	2.9	2.7	0.045	54	61
5.5	**M3AA**	**132 MB**	3GAA	133 026-••C	960	86.6	87.6	0.78	12	7.3	54	3.5	3.0	0.049	59	61
7.5	**M3AA**	**160 M**	3GAA	163 121-••C	975	89.9	90.6	0.77	15.6	7.8	74	2.4	3.3	0.107	102	59
11	**M3AA**	**160 L**	3GAA	163 122-••C	970	90.3	91.2	0.78	23	7.6	108	2.7	3.4	0.127	117	61
15	**M3AA**	**180 L**	3GAA	183 121-••C	970	91.4	91.9	0.75	31	8.3	147	2.8	3.9	0.237	160	59
18.5	**M3AA**	**200 MLB**	3GAA	203 021-••C	985	91.5	91.6	0.81	36	8.3	180	3.7	3.3	0.43	185	
22	**M3AA**	**200 MLC**	3GAA	203 022-••C	985	92.1	92.5	0.82	42	8.3	214	4.0	3.0	0.49	200	
30	**M3AA**	**225 SMC**	3GAA	223 021-••C	985	92.8	93.3	0.83	56	7.5	291	3.8	2.8	0.75	252	
37	**M3AA**	**250 SMB**	3GAA	253 021-••C	985	93.6	93.9	0.82	69	8.3	358	4.1	2.6	1.49	320	
750 r/min = 8 poles					**400 V 50 Hz**									**Basic design**		
1.5	**M3AA**	**112 M**	3GAA	114 022-••C	695	74.0	75.4	0.69	4.1	4.0	20.8	1.6	2.2	0.018	33	
2.2	**M3AA**	**132 S**	3GAA	134 023-••C	720	80.2	80.4	0.67	5.9	5.4	29.2	1.9	2.7	0.045	53	
3	**M3AA**	**132 M**	3GAA	134 024-••C	715	80.2	81.0	0.70	7.8	5.2	40.1	2.1	2.5	0.049	59	
4	**M3AA**	**160 MA**	3GAA	164 121-••C	720	84.6	85.7	0.69	9.8	5.0	53	2.1	2.5	0.091	88	
5.5	**M3AA**	**160 M**	3GAA	164 122-••C	725	86.2	86.6	0.66	14.1	5.8	73	2.4	3.1	0.131	118	
7.5	**M3AA**	**160 L**	3GAA	164 123-••C	715	85.9	86.9	0.70	18.2	5.4	100	2.1	2.7	0.131	118	
11	**M3AA**	**180 L**	3GAA	184 121-••C	720	87.8	89.2	0.75	24	6.0	147	3.2	2.6			
15	**M3AA**	**200 MLB**	3GAA	204 021-••C	735	91.0	91.7	0.81	29	7.9	195	3.2	3.3	0.54	200	
18.5	**M3AA**	**225 SMB**	3GAA	224 021-••C	735	91.0	91.8	0.76	38	6.6	241	2.5	3.0	0.68	225	
22	**M3AA**	**225 SMC**	3GAA	224 022-••C	735	91.3	91.9	0.75	46	7.1	286	3.0	3.3	0.8	255	
30	**M3AA**	**250 SMB**	3GAA	254 021-••C	740	92.6	93.2	0.78	60	7.5	389	2.8	3.3	1.52	320	

[1] On request.

The bullets in the product code indicate choice of mounting arrangement, voltage and frequency, generation code (see ordering information page).

Data at voltage ranges

Rated data at voltage codes S and D

Single-speed motors of size 112 to 132 can be produced with voltage codes S and D, i.e., voltage range at both 50 and 60 Hz. The current rating for each voltage range is specified on the rating plate. It represents the highest current that can exist within the voltage range at the rated output. The power factor and speed specified on the rating plate apply at the average voltage within the range.

Output in kW					Product code	Current in A[1] at		Speed in r/min		Power factor cos φ	
50 Hz	60 Hz		Design [3]	Motor type	3GAA	380-420 V 50 Hz	440-480 V 60 Hz	380-420 V 50 Hz	440-480 V 60 Hz	380-420 V 50 Hz	440-480 V 60 Hz
3000/3600 r/min = 2 poles											
4	**4.6**	[4]		**M2AA 112 M**	**111 001-••A**	7.8	7.7	2850	3450	0.91	0.91
4	**4.6**			**M3AA 112 M**	**111 022-••C**	7.6	7.4	2860	3460	0.93	0.93
5.5	**6.4**	[2]	**HO**	**M3AA 112 MB**	**111 002-••C**	10.5	10.4	2855	3455	0.93	0.93
5.5	**6.4**	[4]		**M2AA 132 SA**	**131 001-••A**	10.9	11	2855	3455	0.88	0.88
5.5	**6.4**			**M3AA 132 SA**	**131 023-••C**	10.7	10.7	2900	3500	0.88	0.87
7.5	**8.6**	[4]		**M2AA 132 SB**	**131 002-••A**	14.7	14.4	2855	3455	0.90	0.90
7.5	**8.6**			**M3AA 132 SB**	**131 024-••C**	13.9	13.8	2915	3515	0.90	0.89
9.2	**10.6**	[2]	**HO**	**M3AA 132 SBB**	**131 004-••C**	17.6	17.3	2840	3440	0.92	0.92
11	**12.6**	[2]	**HO**	**M3AA 132 SC**	**131 003-••C**	21	20	2835	3445	0.93	0.93
1500/1800 r/min = 4 poles											
3	**3.5**			**M3AA 112 MA**	**112 021-••C**	6.5	6.4	1450	1750	0.81	0.8
4	**4.6**	[4]		**M2AA 112 M**	**112 001-••A**	8.9	8.6	1435	1735	0.80	0.81
4	**4.6**			**M3AA 112 M**	**112 022-••C**	9	8.6	1455	1755	0.76	0.76
5.5	**6.4**	[2]	**HO**	**M3AA 112 MB**	**112 002-••C**	11.7	11.6	1425	1725	0.83	0.83
5.5	**6.4**	[4]		**M2AA 132 S**	**132 001-••A**	11.5	11.5	1450	1750	0.83	0.83
5.5	**6.4**			**M3AA 132 S**	**132 023-••C**	11.1	11.1	1460	1760	0.84	0.84
7.5	**8.6**	[4]		**M2AA 132 M**	**132 002-••A**	15.3	15.1	1450	1750	0.83	0.83
7.5	**8.6**			**M3AA 132 M**	**132 024-••C**	14.6	14.3	1450	1750	0.87	0.86
9.2	**10.6**	[2]	**HO**	**M3AA 132 MBA**	**132 004-••C**	18.4	18.2	1445	1745	0.87	0.87
11	**12.6**	[2]	**HO**	**M3AA 132 MB**	**132 003-••C**	22	22	1450	1750	0.86	0.86

[2]) Recalculation factors
Multiple by 1.73 when recalculating:
from 380-420 V to 220-240 V 50 Hz
from 440-480 V to 250-280 V 50 Hz
[3]) Class F temperature rise
[4]) High-output design.
[5]) Efficiency class eff2.

Data at voltage ranges

Rated data at voltage codes S and D

Single-speed motors of size 112 to 132 can be produced with voltage codes S and D, i.e., voltage range at both 50 and 60 Hz. The current rating for each voltage range is specified on the rating plate. It represents the highest current that can exist within the voltage range at the rated output. The power factor and speed specified on the rating plate apply at the average voltage within the range.

Output in kW				Product code	Current in A[1] at		Speed in r/min		Power factor cos φ	
50 Hz	60 Hz	Design [3]	Motor type	3GAA	380-420 V 50 Hz	440-480 V 60 Hz	380-420 V 50 Hz	440-480 V 60 Hz	380-420 V 50 Hz	440-480 V 60 Hz
1000/1200 r/min = 6 poles										
2.2	**2.5**		**M3AA 112 M**	113 001-••C	5.4	5.3	940	1140	0.74	0.74
3.0	**3.5**	**HO**	**M3AA 112 MB**	113 002-••C	7.3	7.3	935	1135	0.76	0.75
3.0	**3.5**		**M3AA 132 S**	133 001-••C	7.1	7.0	960	1160	0.75	0.75
4.0	**4.6**		**M3AA 132 MA**	133 002-••C	8.9	8.9	960	1160	0.78	0.78
5.5	**6.4**		**M3AA 132 MB**	133 003-••C	12.2	12.2	955	1155	0.78	0.78
6.5	**7.5**	**HO**	**M3AA 132 MC**	133 004-••C	15.2	14.9	960	1160	0.75	0.76
750/900 r/min = 8 poles										
1.5	**1.7**		**M3AA 112 M**	114 001-••C	4.6	4.4	695	845	0.65	0.65
2.0	**2.3**	**HO**	**M3AA 112 MB**	114 002-••C	6	6	685	835	0.67	0.66
2.2	**2.5**		**M3AA 132 S**	134 001-••C	5.9	5.9	720	870	0.67	0.66
3.0	**3.5**		**M3AA 132 M**	134 002-••C	7.8	7.8	720	870	0.68	0.68
3.8	**4.4**	**HO**	**M3AA 132 MB**	134 003-••C	10	10	710	860	0.69	0.69

[1]) Recalculation factors.
Multiply by 1.73 when recalculating:
from 380-420 V to 220-240 V 50 Hz
from 440-480 V to 250-280 V 60 Hz

[2]) Class F temperature rise.

[3]) High-output design.

[4]) Efficiency class EFF2.

General purpose aluminum motors

Technical data for totally enclosed squirrel cage three phase motors, two-speed

IP 55 – IC 411 – Insulation class F, temperature rise class F

Output kW	Motor type		Product code	Speed r/min	Efficiency %	Power factor cos φ	Current I_N A	Current I_s/I_N	Torque T_N Nm	Torque T_s/T_N	Torque T_{max}/T_N	Moment of inertia J=1/4 GD² kgm²	Weight kg
3000/1500 r/min = 2/4 poles				**400 V 50 Hz**							**Fan drive, two separate windings**		
0.65/0.14	**M3VA**	**80 A**	**3GVA** 087 121-••B	2860/1450	73.0/57.0	0.85/0.57	1.5/0.58	4.8/3.6	2.18/0.93	1.9/2	2.2/2.3	0.0008	9
0.95/0.2	**M3VA**	**80 B**	**3GVA** 087 122-••B	2850/1440	75.0/61.0	0.87/0.69	2.1/0.7	5/3.7	3.19/1.33	2/1.8	2.2/2.2	0.0009	11
1.1/0.25	**M3VA**	**80 C**	**3GVA** 087 123-••B	2860/1440	77.0/63.0	0.87/0.70	2.4/0.85	5.3/3.8	3.7/1.7	2/1.8	2.2/2	0.0012	12
1.4/0.22	**M3AA**	**90 S**	**3GAA** 098 201-••E	2870/1470	77.0/48.0	0.87/0.63	3/1.1	5.3/3.3	4.6/1.4	1.7/1	2.4/2.3	0.0019	13
1.9/0.3	**M3AA**	**90 L**	**3GAA** 098 202-••E	2880/1470	78.0/53.0	0.87/0.68	4/1.1	5.8/3.7	6.3/1.9	1.9/1	2.5/2.3	0.0024	16
2.5/0.4	**M3AA**	**100 L**	**3GAA** 108 201-••E	2900/1470	80.0/60.0	0.87/0.67	5.2/1.5	6.5/4.1	8.2/2.6	2.1/1	3/2.7	0.0041	21
3.5/0.6	**M3AA**	**112 M**	**3GAA** 118 204-••C	2895/1470	83.0/68.0	0.92/0.60	6.6/2.1	7/5.8	11.5/3.9	1.7/1.8	2.3/2.8	0.012	32
5.5/1	**M3AA**	**132 S**	**3GAA** 138 207-••C	2900/1470	84.0/64.0	0.88/0.65	10.8/3.5	7.8/5.7	18.1/6.5	2.4/2	2.9/2.8	0.016	42
7.4/1.2	**M3AA**	**132 M**	**3GAA** 138 208-••C	2875/1475	85.0/67.0	0.93/0.64	13.5/4.1	7.5/5.9	24.6/7.8	2.1/2	2.6/2.8	0.022	56
13/1.9	**M3AA**	**160 M**	**3GAA** 168 352-••C	2940/1470	88.5/79.5	0.92/0.79	23/4.4	7.8/6.4	42/12	2.1/2.1	3/2.5	0.054	92
17.5/2.5	**M3AA**	**160 L**	**3GAA** 168 353-••C	2925/1475	89.0/81.0	0.92/0.77	31/5.8	7.1/6.7	57/16	2/2.5	2.6/2.9	0.057	99
20/2.8	**M3AA**	**180 M**	**3GAA** 188 357-••C	2930/1465	89.0/77.0	0.90/0.77	36/6.9	6.4/5.8	65/18	2.1/1.9	2.4/2	0.094	132
25/3.6	**M3AA**	**180 L**	**3GAA** 188 358-••C	2940/1465	90.0/78.0	0.88/0.78	46/8.6	7.5/7.3	81/24	2.6/1.9	2.9/1.9	0.108	152
30/4.1	**M3AA**	**200 MLA**	**3GAA** 208 210-••C	2945/1480	91.5/85.0	0.89/0.72	54/10	8/7.1	97/26	2.2/2.7	2.8/2.8	0.15	175
38/5.5	**M3AA**	**200 MLB**	**3GAA** 208 211-••C	2945/1480	92.5/86.5	0.91/0.74	67/13	7.7/6.8	123/35	2.2/2.6	2.6/2.6	0.19	205
43/6	**M3AA**	**225 SMB**	**3GAA** 228 207-••C	2950/1475	92.5/86.5	0.90/0.78	75/13	7.1/5.8	139/39	2.3/2.7	2.4/2	0.26	235
50/7	**M3AA**	**225 SMC**	**3GAA** 228 208-••C	2955/1480	93.0/87.5	0.91/0.78	86/15	7.3/6.1	162/45	2.4/2.9	2.4/2.1	0.29	260
70/10	**M3AA**	**250 SMB**	**3GAA** 258 204-••C	2965/1485	94.0/89.5	0.90/0.76	119/22	9.3/7.1	225/64	2.3/2.5	3.1/2.3	0.57	330
3000/1500 r/min = 2-4 poles				**400 V 50 Hz**							**Fan drive, Dahlander-connection**		
0.22/0.044	**M3VA**	**63 A**	**3GVA** 068 121-••A	2770/1420	65.0/50.0	0.76/0.65	0.65/0.2	3.6/3.5	0.75/0.29	2.1/2.4	2.2/2.5	0.00019	4
0.33/0.07	**M3VA**	**63 B**	**3GVA** 068 122-••A	2700/1380	53.0/45.0	0.82/0.77	1.1/0.3	2.7/2.7	1.17/0.49	1.6/2	1.7/2.1	0.00026	4.5
0.37/0.08	**M3VA**	**71 A**	**3GVA** 078 121-••C	2690/1460	64.0/42.0	0.92/0.47	0.9/0.6	3.3/4.3	1.31/0.52	1.8/2.1	1.9/2.2	0.00066	5.5
0.55/0.12	**M3VA**	**71 B**	**3GVA** 078 122-••C	2700/1470	67.0/55.0	0.91/0.42	1.3/0.75	3.8/3.4	1.94/0.78	1.4/2.2	1.5/2.2	0.00089	6.5
0.65/0.13	**M3VA**	**71 C**	**3GVA** 078 123-••C	2800/1400	69.0/50.0	0.85/0.44	1.6/0.85	4.1/3.5	2.2/0.88	1.5/2.3	1.6/2.4	0.0011	7
0.85/0.2	**M3VA**	**80 A**	**3GVA** 088 121-••B	2850/1440	77.0/65.0	0.85/0.64	1.9/0.7	5/4.1	2.86/1.33	2.1/2.3	2.3/2.6	0.0008	9
1.1/0.25	**M3VA**	**80 B**	**3GVA** 088 122-••B	2855/1450	79.0/68.0	0.84/0.63	2.4/0.85	5.3/4.2	3.7/1.65	2.3/2.5	2.5/2.7	0.0009	11
1.4/0.35	**M3VA**	**80 C**	**3GVA** 088 123-••B	2845/1440	79.0/70.0	0.85/0.67	3/1.1	5.4/4.4	4.7/2.32	2.3/2.4	2.4/2.6	0.0012	11
1.5/0.33	**M3AA**	**90 S**	**3GAA** 098 101-••E	2860/1460	77.0/66.0	0.87/0.67	3.3/1.1	5.2/3.9	5/2.1	1.8/1.1	2.4/2.1	0.0019	13
2.2/0.45	**M3AA**	**90 L**	**3GAA** 098 102-••E	2860/1460	80.0/73.0	0.88/0.65	4.6/1.4	5.9/4.4	7.3/2.9	2.1/1.2	2.6/2.3	0.0024	16
2.5/0.47	**M3AA**	**90 LB**	**3GAA** 098 103-••E	2860/1460	78.0/75.0	0.88/0.62	5.2/1.5	6.1/4.5	8.3/3.1	2.2/1.4	2.5/2.3	0.0027	18
3/0.6	**M3AA**	**100 L**	**3GAA** 108 101-••E	2880/1470	81.0/74.0	0.89/0.61	6.2/1.9	6.3/4.8	9.9/3.9	2.2/1.4	2.8/2.8	0.0041	21
4.5/1	**M3AA**	**112 M**	**3GAA** 118 104-••C	2875/1450	83.0/80.0	0.93/0.76	8.4/2.4	7/6	14.9/6.6	1.8/1.9	2.3/2.8	0.012	32
6.2/1.3	**M3AA**	**132 S**	**3GAA** 138 127-••C	2880/1455	84.0/80.0	0.91/0.67	11.8/3.5	7/6.5	20.6/8.5	2/2.6	2.6/3.3	0.016	42
8.3/1.7	**M3AA**	**132 M**	**3GAA** 138 108-••C	2875/1455	84.0/82.0	0.93/0.71	15.4/4.2	7.4/6.6	27.6/11.2	2.5/2.7	2.7/3.3	0.022	56
10/2	**M3AA**	**160 MA**	**3GAA** 168 301-••C	2910/1465	85.0/83.5	0.89/0.73	19/4.8	5.9/6.1	30/43	1.5/2.4	2.3/2.8	0.039	73
16/3.2	**M3AA**	**160 M**	**3GAA** 168 302-••C	2915/1465	87.5/86.5	0.92/0.76	28.5/7	6.6/6.3	52/21	1.8/2.5	2.4/2.8	0.054	92
19.5/4.5	**M3AA**	**160 L**	**3GAA** 168 303-••C	2930/1465	89.0/88.0	0.89/0.77	36/9.7	7.6/6.4	64/29	2.3/2.5	2.9/2.8	0.057	99
21.5/4.7	**M3AA**	**180 M**	**3GAA** 188 305-••C	2935/1465	90.0/88.0	0.91/0.77	38/10	7/5.3	70/28	2.1/2.1	2.6/2.3	0.094	132
26/5.2	**M3AA**	**180 L**	**3GAA** 188 306-••C	2940/1470	90.5/89.5	0.89/0.75	47/11	6.9/5.8	85/34	2.3/2.4	2.6/2.4	0.108	152
32/8	**M3AA**	**200 MLA**	**3GAA** 208 110-••C	2940/1465	90.0/89.5	0.89/0.85	58/16	7.1/6.2	104/52	2/2	2.5/2.2	0.28	180
39/10	**M3AA**	**200 MLB**	**3GAA** 208 111-••C	2950/1475	91.5/91.0	0.89/0.85	69/19	7.4/6.2	126/65	2/2	2.6/2.3	0.34	205
42/11	**M3AA**	**200 MLC**	**3GAA** 208 112-••C	2950/1470	92.5/91.0	0.89/0.77	75/23	7.7/5.6	136/71	2.2/2.1	3/2.5	0.19	205
45/13	**M3AA**	**225 SMB**	**3GAA** 228 107-••C	2955/1475	93.0/91.5	0.92/0.82	76/25	7.4/5.3	145/84	2/2	2.6/2.1	0.27	235
55/15	**M3AA**	**225 SMC**	**3GAA** 228 108-••C	2955/1475	93.5/92.5	0.91/0.82	94/29	7.3/5.4	178/97	2/2	2.6/2.2	0.3	260
75/25	**M3AA**	**250 SMB**	**3GAA** 258 104-••C	2965/1475	94.5/93.0	0.92/0.82	125/48	8.9/5.5	241/162	2.3/2	3.1/2.2	0.36	330

Data for motor size 280 on request.

The bullets in the product code indicate choice of mounting arrangement, voltage and frequency, generation code (see ordering information page).

General purpose aluminum motors

Technical data for totally enclosed squirrel cage three phase motors, two-speed

IP 55 – IC 411 – Insulation class F, temperature rise class F

Output kW	Motor type		Product code		Speed r/min	Effi-ciency %	Power factor cos φ	Current I_N A	Current I_s/I_N	Torque T_N Nm	Torque T_s/T_N	Torque T_{max}/T_N	Moment of inertia J=1/4 GD² kgm²	Weight kg
1500/750 r/min = 4/8 poles					**400 V 50 Hz**								**Fan drive, two separate windings**	
0.18/0.025	**M3VA**	**71 A**	**3GVA**	077 241-••C	1420/710	50.0/26.0	0.76/0.60	0.7/0.35	2.7/2.1	1.22/0.34	1.5/3.9	1.9/3.9	0.00066	5.5
0.3/0.05	**M3VA**	**71 B**	**3GVA**	077 242-••C	1400/700	54.0/34.0	0.80/0.60	1/0.45	2.7/2.1	2.1/0.69	1.5/2.8	1.7/2.8	0.00089	6.5
0.48/0.075	**M3VA**	**80 A**	**3GVA**	087 241-••B	1400/710	64.0/35.0	0.79/0.51	1.4/0.55	3.4/2.4	3.3/1	1.7/2.2	1.7/2.6	0.0013	9
0.63/0.1	**M3VA**	**80 B**	**3GVA**	087 242-••B	1400/710	68.0/40.0	0.81/0.50	1.65/0.75	3.7/2.5	4.4/1.35	1.8/2.3	1.8/2.6	0.0016	11
0.73/0.12	**M3VA**	**80 C**	**3GVA**	087 243-••B	1400/710	70.0/42.0	0.80/0.50	1.9/0.85	4.1/2.6	5/1.7	2/2.3	2/2.5	0.002	12
1/0.13	**M3AA**	**90 S**	**3GAA**	098 207-••E	1400/700	71.0/38.0	0.83/0.70	2.6/0.72	3.9/2.1	6.8/1.8	1.5/1	2/1.7	0.0032	13
1.4/0.18	**M3AA**	**90 L**	**3GAA**	098 208-••E	1420/710	74.0/41.0	0.81/0.60	3.5/1.1	4.5/2.3	9.4/2.4	1.7/1.1	2.3/2.1	0.0043	16
1.85/0.25	**M3AA**	**100 LA**	**3GAA**	108 206-••E	1430/720	78.0/45.0	0.84/0.60	4.2/1.4	4.9/2.5	12/3.3	1.7/1.1	2.3/2.1	0.0069	20
2.3/0.33	**M3AA**	**100 LB**	**3GAA**	108 207-••E	1430/720	80.0/49.0	0.86/0.60	5/1.6	5.2/2.6	15/4.3	1.8/1.1	2.4/2.2	0.0082	23
3/0.4	**M3AA**	**112 M**	**3GAA**	118 206-••C	1440/730	81.0/51.0	0.87/0.58	6.2/2	6.8/3.8	19.9/5.2	1.5/1.6	2.4/2.6	0.018	32
4/0.6	**M3AA**	**132 S**	**3GAA**	138 231-••C	1465/740	84.0/51.0	0.84/0.53	8.2/3.2	6.5/3.5	26.1/7.7	1.5/1.1	2.4/2.5	0.038	48
5.5/0.9	**M3AA**	**132 M**	**3GAA**	138 232-••C	1455/735	84.0/53.0	0.87/0.64	10.9/3.9	6.2/3.1	36.1/11.7	1.5/1.1	2.2/2	0.048	59
9/1.3	**M3AA**	**160 M**	**3GAA**	168 356-••C	1460/735	87.0/60.0	0.84/0.53	18/5.9	6.6/4	59/17	2/2.2	2.5/2.7	0.089	92
13/1.8	**M3AA**	**160 L**	**3GAA**	168 357-••C	1455/735	88.0/64.0	0.85/0.53	26/8.2	6/4.1	89/26	1.9/2.2	2.3/2.6	0.119	117
16/2.3	**M3AA**	**180 M**	**3GAA**	188 361-••C	1475/740	88.5/64.0	0.82/0.53	32/9.7	6.8/4.1	104/30	2.2/2.2	2.7/2.6	0.176	130
19/2.7	**M3AA**	**180 L**	**3GAA**	188 362-••C	1475/740	89.5/68.0	0.83/0.54	37/10.5	7.5/7.2	123/35	2.6/2.6	2.9/2.6	0.224	159
26/3.3	**M3AA**	**200 MLA**	**3GAA**	208 216-••C	1475/740	91.0/73.0	0.85/0.59	49/11	6.9/4.6	168/46	2.1/2.2	2.5/2.3	0.28	180
30/3.8	**M3AA**	**200 MLB**	**3GAA**	208 217-••C	1470/740	91.5/75.5	0.86/0.59	55/12.5	6.7/4.6	195/49	2.1/2.2	2.4/2.2	0.34	205
38/5.2	**M3AA**	**225 SMB**	**3GAA**	228 211-••C	1480/740	91.5/80.5	0.84/0.63	72/15	7.3/5.2	245/67	2.1/2.3	2.6/2.3	0.41	230
46/7	**M3AA**	**225 SMC**	**3GAA**	228 212-••C	1480/740	92.5/82.0	0.86/0.66	85/19	7.7/4.9	297/90	2.3/2.1	2.7/2.1	0.49	265
63/10	**M3AA**	**250 SMB**	**3GAA**	258 206-••C	1475/740	93.5/83.0	0.89/0.65	110/27	7.5/6	408/129	2.4/3	2.7/2.7	0.89	335
1500/750 r/min = 4-8 poles					**400 V 50 Hz**								**Fan drive, Dahlander-connection**	
0.18/0.037	**M3VA**	**71 A**	**3GVA**	078 241-••C	1380/720	58.0/17.0	0.74/0.50	0.6/0.7	3.5/1.7	1.24/0.49	1.7/1.7	1.8/1.8	0.00066	5.5
0.37/0.09	**M3VA**	**71 B**	**3GVA**	078 242-••C	1360/700	58.0/19.0	0.84/0.52	1.1/1.2	3.1/1.7	2.6/1.2	1.3/1.8	1.4/1.9	0.00089	6.5
0.45/0.1	**M3VA**	**71 C**	**3GVA**	078 243-••C	1390/685	60.0/24.0	0.78/0.51	1.4/1.2	3.5/2.6	3.1/1.4	1.7/1.3	1.8/1.4	0.0011	7
0.55/0.13	**M3VA**	**80 A**	**3GVA**	088 241-••B	1410/680	64.0/50.0	0.70/0.60	1.8/0.65	3.8/2.4	3.74/1.83	2.2/1.6	2.2/1.6	0.0013	9
0.75/0.17	**M3VA**	**80 B**	**3GVA**	088 242-••B	1400/675	67.0/53.0	0.75/0.62	2.15/0.75	4/2.4	5.13/2.41	2/1.4	2/1.4	0.0016	10
0.9/0.2	**M3VA**	**80 C**	**3GVA**	088 243-••B	1400/680	70.0/56.0	0.76/0.62	2.45/0.85	4.3/2.5	6.15/2.82	2.3/1.5	2.3/2.5	0.002	11
1.1/0.26	**M3AA**	**90 S**	**3GAA**	098 104-••E	1410/700	73.0/53.0	0.80/0.63	2.8/1.2	4.2/2.4	7.4/3.6	1.8/1.2	2.3/1.9	0.0032	13
1.7/0.35	**M3AA**	**90 L**	**3GAA**	098 105-••E	1390/700	74.0/57.0	0.82/0.57	4/1.6	4.5/2.5	10.3/4.7	2.2/1.5	2.6/2.1	0.0043	16
1.8/0.35	**M3AA**	**90 LB**	**3GAA**	098 106-••E	1400/710	76.0/60.0	0.83/0.56	4.2/1.5	4.3/2.7	12/4.8	1.9/1.6	2.3/2.3	0.0048	18
2.3/0.5	**M3AA**	**100 LA**	**3GAA**	108 103-••E	1415/715	76.0/63.0	0.84/0.60	5.2/1.9	4.6/2.7	15.5/6.7	1.8/1.2	2.4/1.9	0.0069	20
2.8/0.6	**M3AA**	**100 LB**	**3GAA**	108 104-••E	1430/720	81.0/68.0	0.82/0.58	6.4/2.2	5.2/3	18/8	2/1.2	2.6/2.2	0.0082	23
3/0.65	**M3AA**	**100 LC**	**3GAA**	108 105-••E	1430/720	81.0/67.0	0.81/0.56	6.8/2.5	5.6/3	20/8.7	2.2/1.3	2.8/2.3	0.009	26
3.5/0.7	**M3AA**	**112 M**	**3GAA**	118 126-••C	1430/720	81.0/71.0	0.89/0.58	7/2.5	6.8/4.4	23.4/9.3	1.6/1.7	2.5/2.7	0.018	32
5/1	**M3AA**	**132 S**	**3GAA**	138 131-••C	1450/725	83.0/74.0	0.87/0.59	9.9/3.3	6.4/3.6	32.9/13.2	1.5/1	2.3/2	0.038	48
6.8/1.4	**M3AA**	**132 M**	**3GAA**	138 132-••C	1460/730	85.0/73.0	0.84/0.55	13.7/5.1	7.6/3.6	44.5/18.3	2/1.4	2.8/2.7	0.048	59
10.5/2.2	**M3AA**	**160 M**	**3GAA**	168 304-••C	1460/735	87.5/79.0	0.84/0.54	21/7.4	6.9/3.7	69/29	2.2/1.5	2.7/2.3	0.089	94
15.5/2.7	**M3AA**	**160 L**	**3GAA**	168 305-••C	1460/735	88.5/79.5	0.85/0.51	30/9.5	6.9/3.9	101/35	2.2/1.7	2.6/2.6	0.119	117
17/3.4	**M3AA**	**180 M**	**3GAA**	188 307-••C	1470/730	88.5/78.0	0.85/0.56	33/11	5.8/4.3	111/44	1.7/1.2	2.3/1.9	0.176	137
22/4.4	**M3AA**	**180 L**	**3GAA**	188 308-••C	1475/735	89.5/79.0	0.83/0.53	43/15	6.7/3.9	143/57	2/1.7	2.6/2.3	0.224	161
29/6.5	**M3AA**	**200 MLA**	**3GAA**	208 116-••C	1470/730	90.5/86.0	0.86/0.64	54/17	6.9/4.2	188/81	2.2/1.9	2.4/1.9	0.28	180
33/8	**M3AA**	**200 MLB**	**3GAA**	208 117-••C	1475/730	91.5/86.5	0.86/0.64	61/21	7.8/4.2	214/105	2.6/1.9	2.6/1.8	0.34	205
42/10	**M3AA**	**225 SMB**	**3GAA**	228 111-••C	1480/740	92.0/89.5	0.86/0.64	85/27	7.8/5	271/129	2.5/2.2	3/2.3	0.49	265
50/11	**M3AA**	**225 SMC**	**3GAA**	228 112-••C	1465/735	92.5/89.5	0.87/0.65	91/28	7.3/4.7	324/143	2.3/2	2.5/2	0.49	265
60/15	**M3AA**	**250 SMB**	**3GAA**	258 106-••C	1475/735	93.0/90.0	0.86/0.70	104/34	7.9/4.7	388/195	2.6/2.1	2.7/2	0.89	335

General purpose aluminum motors

Technical data for totally enclosed squirrel cage three phase motors, two-speed

IP 55 – IC 411 – Insulation class F, temperature rise class F

Output kW	Motor type		Product code		Speed r/min	Effi-ciency %	Power factor cos φ	Current I_N A	Current I_s/I_N	Torque T_N Nm	Torque T_s/T_N	Torque T_{max}/T_N	Moment of inertia J=1/4 GD² kgm²	Weight kg
1500/1000 r/min = 4/6 poles					**400 V 50 Hz**							**Fan drive, two separate windings**		
0.18/0.05	**M3VA**	**71 A**	**3GVA**	077 231-••C	1400/900	56.0/27.0	0.76/0.79	0.6/0.4	3/2.1	1.22/0.53	1.1/1.1	1.2/1.2	0.00066	5.5
0.3/0.1	**M3VA**	**71 B**	**3GVA**	077 232-••C	1350/900	54.0/30.0	0.86/0.79	0.9/0.6	2.8/2	2.1/1.06	1/1.1	1.1/1.1	0.00089	6.5
0.5/0.19	**M3VA**	**80 A**	**3GVA**	087 231-••B	1370/930	60.0/53.0	0.84/0.77	1.4/0.7	2.9/3.1	3.5/1.96	1.4/1.5	1.4/1.5	0.0019	9
0.66/0.25	**M3VA**	**80 B**	**3GVA**	087 232-••B	1390/935	63.0/59.0	0.85/0.78	1.75/0.8	3.3/3.3	4.55/2.56	1.6/1.5	1.6/1.6	0.0022	10
0.78/0.3	**M3VA**	**80 C**	**3GVA**	087 233-••B	1400/940	66.0/60.0	0.84/0.73	2/1	3.6/3.8	5.33/3.06	1.8/1.9	1.8/2.1	0.0025	10
1/0.3	**M3AA**	**90 S**	**3GAA**	098 204-••E	1400/940	73.0/53.0	0.83/0.70	2.5/1.2	4.2/2.6	6.8/3	1.8/1	2.2/1.7	0.0032	13
1.5/0.45	**M3AA**	**90 L**	**3GAA**	098 205-••E	1400/930	72.0/52.0	0.84/0.73	3.5/1.6	4.3/2.9	10/4.5	1.7/1	2.1/1.8	0.0043	16
2/0.6	**M3AA**	**100 LA**	**3GAA**	108 203-••E	1430/960	77.0/62.0	0.85/0.72	4.5/2	5/3.3	13/5.9	1.8/1	2.4/1.9	0.0069	20
2.5/0.8	**M3AA**	**100 LB**	**3GAA**	108 204-••E	1430/960	79.0/68.0	0.84/0.71	5.5/2.5	5.6/3.5	16/7.9	2/1.1	2.5/2	0.0082	23
3/1	**M3AA**	**112 M**	**3GAA**	118 205-••C	1445/975	82.0/67.0	0.84/0.68	6.3/3.1	6/4	19.8/9.8	1.3/1	2.3/2.2	0.018	33
4.5/1.5	**M3AA**	**132 S**	**3GAA**	138 229-••C	1460/985	83.0/67.0	0.85/0.64	9.2/5.1	6.5/4.2	29.4/14.5	1.5/1	2.3/2.2	0.038	48
6/2	**M3AA**	**132 M**	**3GAA**	138 230-••C	1460/980	84.0/71.0	0.86/0.73	12/5.6	7.1/4.5	39.2/19.5	1.8/1.3	2.5/2	0.048	59
10.5/3.5	**M3AA**	**160 M**	**3GAA**	168 354-••C	1460/965	87.0/75.5	0.84/0.78	21/8.6	6.4/4.1	69/35	2/1.3	2.5/1.7	0.089	93
14.5/4.5	**M3AA**	**160 L**	**3GAA**	168 355-••C	1460/970	88.5/77.0	0.85/0.76	28/11	6.9/4.6	95/44	2.2/1.5	2.6/1.9	0.119	117
16/5	**M3AA**	**180 M**	**3GAA**	188 359-••C	1470/980	89.0/78.0	0.83/0.73	31/12.5	6.3/4.6	104/49	1.9/1.5	2.5/2	0.176	131
20/6.5	**M3AA**	**180 L**	**3GAA**	188 360-••C	1470/980	90.0/79.5	0.83/0.74	39/16	7.2/5	130/63	2.4/1.8	2.7/2	0.224	159
23/7.2	**M3AA**	**200 MLA**	**3GAA**	208 213-••C	1475/985	89.5/84.0	0.88/0.87	43/15	7.7/7.8	149/70	1.6/1.9	2.8/2.9	0.44	175
30/9	**M3AA**	**200 MLB**	**3GAA**	208 214-••C	1470/990	90.0/86.6	0.90/0.84	54/18.2	7.7/9.5	195/87	1.6/1.7	2.7/2.9	0.53	200
34/11	**M3AA**	**225 SMB**	**3GAA**	228 209-••C	1470/985	91.0/85.0	0.91/0.89	60/21	7.7/6.7	221/107	1.5/1.3	2.7/2.3	0.67	225
42/14	**M3AA**	**225 SMC**	**3GAA**	228 210-••C	1475/985	91.5/89.0	0.89/0.89	75/27	8.4/6.8	272/136	1.7/1.4	3/2.3	0.78	255
63/18.5	**M3AA**	**250 SMB**	**3GAA**	258 205-••C	1475/985	93.5/87.0	0.89/0.79	110/40	7.5/7.3	408/179	2.4/3	2.7/2.6	0.89	335
1000/750 r/min = 6/8 poles					**400 V 50 Hz**							**Fan drive, two separate windings**		
0.25/0.1	**M3VA**	**80 A**	**3GVA**	087 341-••B	945/725	57.0/41.0	0.68/0.55	0.95/0.65	3.2/2.8	2.6/1.32	2/2.4	2.2/2.9	0.0019	9
0.33/0.14	**M3VA**	**80 B**	**3GVA**	087 342-••B	940/720	62.0/46.0	0.74/0.56	1.05/0.8	3.4/3.1	3.36/1.86	1.9/2.5	1.9/3	0.0022	10
0.45/0.2	**M3AA**	**90 S**	**3GAA**	098 210-••E	940/700	59.0/44.0	0.72/0.67	1.6/1	3.1/2.2	4.6/2.7	1.4/1	2/1.7	0.0032	13
0.7/0.3	**M3AA**	**90 L**	**3GAA**	098 211-••E	930/690	63.0/45.0	0.75/0.64	2.2/1.5	3.1/2.3	7.2/4.1	1.3/1.1	1.8/1.8	0.0043	16
0.9/0.4	**M3AA**	**100 LA**	**3GAA**	108 209-••E	950/720	68.0/55.0	0.77/0.61	2.5/1.8	3.4/2.7	9.1/5.3	1.2/1.1	1.8/1.8	0.0069	20
1.2/0.5	**M3AA**	**100 LB**	**3GAA**	108 210-••E	950/710	71.0/57.0	0.71/0.61	3.5/2.1	3.7/2.9	12/6.6	1.3/1.2	2/2	0.0082	23
17/7.5	**M3AA**	**200 MLB**	**3GAA**	208 221-••C	985/740	88.0/81.5	0.85/0.77	33/17	7.1/6.4	165/97	2.2/2.2	2.5/2.5	0.42	185
20/9	**M3AA**	**200 MLC**	**3GAA**	208 222-••C	985/740	88.5/82.5	0.84/0.74	39/21	7.6/7	194/116	2.4/2.6	2.7/2.9	0.48	200
26/12	**M3AA**	**225 SMB**	**3GAA**	228 215-••C	985/740	89.5/84.5	0.85/0.76	49/27	7.4/7.1	252/155	2.2/2.4	2.5/2.7	0.63	225
32/14	**M3AA**	**225 SMC**	**3GAA**	228 216-••C	985/740	90.5/85.5	0.83/0.76	62/31	7/7.2	310/180	2.4/2.5	2.4/2.5	0.74	250
43/15	**M3AA**	**250 SMB**	**3GAA**	258 208-••C	990/745	91.0/86.0	0.84/0.75	81/34	7.3/7.4	415/198	2.2/2.7	2.5/2.8	1.41	320
1000/500 r/min = 6-12 poles					**400 V 50 Hz**							**Fan drive, Dahlander-connection**		
0.4/0.08	**M3VA**	**80 A**	**3GVA**	088 361-••B	900/460	62.0/30.0	0.78/0.56	1.2/0.7	3.1/1.9	4.26/1.67	1.6/1.6	1.6/1.7	0.0019	9
0.5/0.105	**M3VA**	**80 B**	**3GVA**	088 362-••B	915/465	66.0/31.0	0.75/0.52	1.45/0.95	3.7/2	5.23/2.16	1.9/1.9	2/2	0.0022	10
0.6/0.12	**M3VA**	**80 C**	**3GVA**	088 363-••B	920/470	68.0/32.0	0.74/0.50	1.75/1.05	3.8/2.1	6.24/2.45	2/2	2/2	0.0025	11
0.5/0.08	**M3AA**	**90 S**	**3GAA**	098 107-••E	920/440	60.0/31.0	0.74/0.59	1.7/0.63	2.9/1.7	5.2/1.7	1.2/1.4	1.8/2	0.0032	13
0.75/0.12	**M3AA**	**90 L**	**3GAA**	098 108-••E	930/450	64.0/36.0	0.73/0.54	2.4/0.9	3/1.8	7.7/2.5	1.3/1.6	1.9/1.9	0.0043	16
0.9/0.16	**M3AA**	**100 LA**	**3GAA**	108 106-••E	940/470	69.0/45.0	0.73/0.49	2.6/0.96	3.6/2.1	9/3.2	1.3/1.2	2/1.8	0.0069	20
1.3/0.2	**M3AA**	**100 LB**	**3GAA**	108 107-••E	940/460	71.0/52.0	0.76/0.47	3.5/1.2	3.4/2.2	13/4	1.2/1	1.8/1.5	0.0082	23

Data for motor size 280 on request.

The bullets in the product code indicate choice of mounting arrangement, voltage and frequency, generation code (see ordering information page).

General purpose aluminum motors

Technical data for totally enclosed squirrel cage three phase motors, two-speed

IP 55 – IC 411 – Insulation class F, temperature rise class F

Output kW	Motor type	Product code	Speed r/min	Effi-ciency %	Power factor cos φ	Current I_N A	Current I_s/I_N	Torque T_N Nm	Torque T_s/T_N	Torque T_{max}/T_N	Moment of inertia J=1/4 GD² kgm²	Weight kg
3000/1500 r/min = 2/4 poles			**400 V 50 Hz**								**Constant torque, two separate windings**	
0.58/0.28	**M3VA 80 A**	**3GVA** 089 121-••B	2850/1400	70.0/60.0	0.88/0.78	1.35/0.85	4.4/3.1	1.95/1.92	1.6/1.5	1.9/1.5	0.0008	9
0.7/0.36	**M3VA 80 B**	**3GVA** 089 122-••B	2860/1400	74.0/64.0	0.88/0.78	1.55/1.05	5/3.4	2.35/2.46	1.8/1.6	2.2/1.8	0.0009	11
0.85/0.42	**M3VA 80 C**	**3GVA** 089 123-••B	2890/1410	76.0/66.0	0.87/0.76	1.85/1.25	5.6/3.5	2.82/2.85	1.9/1.7	2.5/1.7	0.0012	12
1.1/0.55	**M3AA 90 S**	**3GAA** 098 213-••E	2900/1450	74.0/62.0	0.85/0.64	2.5/2	5.1/3.6	3.6/3.6	1.4/1.5	2.3/2.3	0.0019	13
1.5/0.75	**M3AA 90 L**	**3GAA** 098 214-••E	2900/1450	77.0/70.0	0.87/0.67	3.3/2.4	5.7/4.1	4.9/4.9	1.5/1.5	2.5/2.3	0.0024	16
2/1	**M3AA 100 L**	**3GAA** 108 212-••E	2900/1460	76.0/67.0	0.89/0.66	4.3/3.3	6.2/4	6.5/6.5	1.9/1.4	2.8/2.6	0.0041	21
2.6/1.3	**M3AA 112 M**	**3GAA** 118 201-••C	2900/1460	80.0/75.0	0.92/0.72	5.1/3.5	6.4/5	8.6/8.5	1.6/1.6	2.3/2.3	0.012	32
4.4/2.2	**M3AA 132 SB**	**3GAA** 138 201-••C	2925/1450	81.0/74.0	0.86/0.73	9.1/5.9	7.3/4.4	14.4/14.5	2/1.3	2.3/2.2	0.016	42
5.6/2.8	**M3AA 132 M**	**3GAA** 138 202-••C	2885/1440	82.0/77.0	0.93/0.75	10.6/7	6.7/5	18.5/18.6	1.8/1.4	2.1/2.2	0.022	56
12/6	**M3AA 160 M**	**3GAA** 168 359-••C	2835/1460	87.5/84.5	0.92/0.80	22/13	7.7/6	39/39	2.1/2.3	2.8/2.4	0.054	92
15/7.5	**M3AA 160 L**	**3GAA** 168 360-••C	2940/1460	88.5/84.5	0.93/0.78	27/16.5	7.9/6	49/49	2.2/2.4	2.9/2.4	0.057	99
18/9	**M3AA 180 L**	**3GAA** 188 352-••C	2945/1460	89.0/84.0	0.90/0.77	32/20	7.7/5.2	58/59	2.5/2.3	2.8/2.1	0.108	152
23/12	**M3AA 200 MLA**	**3GAA** 208 201-••C	2960/1475	90.0/89.0	0.89/0.85	42/23	7.8/7.4	74/77	1.7/2.2	2.8/2.5	0.28	178
30/16	**M3AA 200 MLB**	**3GAA** 208 202-••C	2960/1475	91.0/90.0	0.90/0.87	53/30	8.2/7.3	97/104	1.8/2.2	2.9/2.5	0.34	204
36/18	**M3AA 225 SMB**	**3GAA** 228 201-••C	2960/1480	91.5/91.5	0.91/0.76	63/38	8/7.2	116/116	2.5/3.8	2.7/2.5	0.26	236
40/20	**M3AA 225 SMC**	**3GAA** 228 202-••C	2960/1475	92.0/91.5	0.91/0.79	69/41	8.5/6.5	129/129	2.8/3.3	2.8/2.2	0.29	261
50/25	**M3AA 250 SMB**	**3GAA** 258 201-••C	2965/1485	93.0/93.0	0.91/0.76	86/52	8.9/8.5	161/161	2.1/3.5	2.9/2.9	0.57	333
3000/1500 r/min = 2-4 poles			**400 V 50 Hz**								**Constant torque, Dahlander-connection**	
0.11/0.07	**M3VA** 56 B	3GVA 050 122-••A	2730/1370	53.0/44.0	0.75/0.58	0.4/0.4	3.4/2.6	0.38/0.48	2.5/2.7	2.6/2.8	0.00018	3.5
0.2/0.15	**M3VA 63 A**	**3GVA** 060 121-••A	2800/1400	63.0/54.0	0.70/0.63	0.65/0.65	3.6/2.8	0.68/1.02	2.1/2	2.2/2.1	0.00019	4
0.3/0.2	**M3VA 63 B**	**3GVA** 060 122-••A	2740/1370	59.0/55.0	0.78/0.63	0.95/0.85	2.8/2.8	1.05/1.4	1.7/2.1	1.8/2.2	0.00026	4.5
0.37/0.25	**M3VA 71 A**	**3GVA** 070 121-••C	2700/1390	64.0/60.0	0.89/0.79	0.95/0.7	3.3/3.1	1.3/1.72	1.9/1.5	2/1.6	0.00066	5.5
0.48/0.31	**M3VA 71 B**	**3GVA** 070 122-••C	2780/1400	68.0/68.0	0.91/0.76	1.2/0.9	3.6/4	1.66/2.15	1.4/2	1.5/2.1	0.00089	6.5
0.55/0.37	**M3VA 71 C**	**3GVA** 070 123-••C	2800/1400	66.0/64.0	0.80/0.65	1.5/1.2	4.7/4.3	1.87/2.52	1.8/1.9	1.9/2	0.0011	7
0.63/0.5	**M3VA 80 A**	**3GVA** 080 121-••B	2690/1400	66.0/67.0	0.87/0.79	1.6/1.35	3.6/4.2	2.25/3.42	1.8/1.9	1.9/2.1	0.0013	9
0.85/0.65	**M3VA 80 B**	**3GVA** 080 122-••B	2725/1405	70.0/70.0	0.88/0.80	2/1.7	4/4.4	2.99/4.43	1.9/2	1.9/2.2	0.0016	10
1.1/0.8	**M3VA 80 C**	**3GVA** 080 123-••B	2730/1410	72.0/71.0	0.88/0.79	2.55/2.05	4.2/4.7	3.8/5.38	2/2	2.1/2.4	0.002	11
1.3/1	**M3AA 90 S**	**3GAA** 098 110-••E	2730/1400	71.0/71.0	0.88/0.80	3.1/2.6	3.9/3.8	4.5/6.8	2/1.5	2.2/2	0.0032	13
1.9/1.5	**M3AA 90 L**	**3GAA** 098 111-••E	2820/1420	74.0/75.0	0.82/0.76	4.4/3.9	5.1/4.4	6.4/10	2.8/2	3/2.5	0.0043	16
2.5/2.1	**M3AA 100 LA**	**3GAA** 108 109-••E	2800/1430	68.0/76.0	0.88/0.81	6/5	4.8/4.4	8.5/14	2.2/1.6	2.5/2.2	0.0069	20
3.4/2.7	**M3AA 100 LB**	**3GAA** 108 110-••E	2810/1430	78.0/80.0	0.88/0.85	7.2/5.9	5.3/5.4	11.5/18	2.2/1.9	2.5/2.5	0.0082	23
4/2.6	**M3AA 112 M**	**3GAA** 118 101-••C	2865/1430	82.0/77.0	0.94/0.76	7.6/6.5	6.3/6.2	13.3/17.4	1.8/2.3	2.1/2.6	0.012	32
4.7/3.1	**M3AA 132 SB**	**3GAA** 138 101-••C	2820/1420	79.0/77.0	0.93/0.76	9.2/7.7	5.5/5.7	15.9/20.8	1.8/2.2	2.1/2.4	0.016	42
7.2/4.8	**M3AA 132 M**	**3GAA** 138 102-••C	2870/1435	84.0/81.0	0.93/0.76	13.3/11.5	7.1/6.2	24/31.9	2.4/2.5	2.6/2.7	0.022	56
9/6.5	**M3AA 160 MA**	**3GAA** 168 306-••C	2885/1440	83.0/82.0	0.92/0.74	17.1/15.6	4.6/4.3	40/43	1.3/1.7	1.9/1.9	0.039	73
12.5/9	**M3AA 160 M**	**3GAA** 168 307-••C	2890/1440	85.5/85.5	0.93/0.80	22.5/19	5.2/4.6	41/60	1.4/1.8	1.9/1.9	0.054	92
15/10.5	**M3AA 160 L**	**3GAA** 168 308-••C	2900/1445	87.0/86.0	0.93/0.77	27/23	5.8/4.9	49/69	1.6/2.1	2.1/2.1	0.057	99
18/12	**M3AA 180 M**	**3GAA** 188 301-••C	2940/1455	89.0/89.0	0.88/0.79	33/25	6.8/5.3	59/79	2.1/2.4	2.6/2.2	0.094	132
24/17	**M3AA 180 L**	**3GAA** 188 302-••C	2945/1455	90.0/90.0	0.89/0.80	43/34	7.4/5.2	78/111	2.4/2.4	2.8/2.1	0.108	152
32/24	**M3AA 200 MLA**	**3GAA** 208 101-••C	2940/1470	89.0/90.5	0.89/0.86	58/45	6.8/5.9	104/156	1.8/2.1	2.4/2.1	0.28	180
39/29	**M3AA 200 MLB**	**3GAA** 208 102-••C	2950/1470	90.5/91.0	0.84/0.86	75/53	6.8/7	126/188	1.7/2.2	2.6/2.4	0.34	205
42/32	**M3AA 225 SMB**	**3GAA** 228 101-••C	2955/1475	92.5/93.0	0.92/0.88	71/57	7.1/6.5	136/207	1.5/1.9	2.5/2.3	0.49	230
50/40	**M3AA 225 SMC**	**3GAA** 228 102-••C	2965/1480	92.5/93.0	0.84/0.87	87/72	7.4/7.1	161/259	2.4/2.8	3.3/3	0.49	265
68/50	**M3AA 250 SMB**	**3GAA** 258 101-••C	2940/1475	93.0/93.5	0.93/0.88	113/87	6.6/6.9	220/324	1.5/2.1	2.4/2.5	0.89	335

General purpose aluminum motors

Technical data for totally enclosed squirrel cage three phase motors, two-speed

IP 55 – IC 411 – Insulation class F, temperature rise class F

Output kW	Motor type	Product code	Speed r/min	Efficiency %	Power factor cos φ	Current I_N A	Current I_s/I_N	Torque T_N Nm	Torque T_s/T_N	Torque T_{max}/T_N	Moment of inertia J=1/4 GD² kgm²	Weight kg
3000/750 r/min = 2/8 poles			**400 V 50 Hz**							**Constant torque, two separate windings**		
0.25/0.06	**M3VA 71 A**	**3GVA** 079 141-••A	2760/660	52.0/36.0	0.94/0.70	0.75/0.35	2.9/1.9	0.86/0.86	1/1.3	1.1/1.4	0.00066	5.5
0.37/0.09	**M3VA 71 B**	**3GVA** 079 142-••A	2800/660	68.0/41.0	0.87/0.65	0.9/0.5	2.8/2	1.26/1.3	1/1.6	1.1/1.7	0.00089	6.5
0.5/0.12	**M3VA 80 A**	**3GVA** 089 141-••B	2730/700	60.0/38.0	0.87/0.58	1.4/0.8	3.2/2.3	1.78/1.64	1.3/2	1.6/2	0.0013	9
0.66/0.15	**M3VA 80 B**	**3GVA** 089 142-••B	2780/700	65.0/40.0	0.87/0.58	1.65/0.95	3.8/2.5	2.55/2.45	1.4/2.2	1.8/2.2	0.0016	10
0.78/0.18	**M3VA 80 C**	**3GVA** 089 143-••B	2800/700	68.0/43.0	0.87/0.57	1.9/1.15	4/2.6	2.67/2.46	1.5/2.4	2.2/2.4	0.002	11
0.75/0.18	**M3AA 90 LA**	**3GAA** 098 700-••E	2875/720	71.2/46.3	0.80/0.51	1.9/1.1	5.7/2.4	2.5/2.4	2.3/1.3	2.7/1.9	0.0043	16
1.3/0.33	**M3AA 90 LB**	**3GAA** 098 701-••E	2780/690	71.0/52.0	0.92/0.62	2.9/1.5	4.5/2.3	4.4/4.5	1.8/1.2	2/1.7	0.0043	16
1.8/0.5	**M3AA 100 LB**	**3GAA** 108 700-••E	2860/705	80.0/54.0	0.93/0.64	3.5/2.1	5.3/2.6	6/6.7	1.7/1.3	2.2/1.9	0.0082	24
1500/1000 r/min = 4/6 poles			**400 V 50 Hz**							**Constant torque, two separate windings**		
0.11/0.08	**M3VA 63 B**	**3GVA** 069232-••A	1390/860	40.0/25.0	0.70/0.72	0.55/0.62	2.5/1.8	0.75/0.88	1.4/1.8	1.9/1.9	0.00026	4.5
0.3/0.2	**M3VA 71 A**	**3GVA** 079 231-••C	1390/900	51.0/40.0	0.82/0.72	0.7/0.5	2.8/2	1.37/0.79	1.1/1.05	1.1/1.1	0.00066	5.5
0.37/0.22	**M3VA 71 B**	**3GVA** 079 232-••C	1380/900	58.0/40.0	0.83/0.80	0.9/0.8	2.7/1.9	2.07/1.91	1/1.1	1.1/1.1	0.00089	6.5
0.43/0.28	**M3VA 80 A**	**3GVA** 089 231-••B	1380/910	60.0/54.0	0.85/0.81	1.4/1.2	3.1/2.9	2.54/3.02	1.5/1.4	1.5/1.4	0.0019	9
0.58/0.37	**M3VA 80 B**	**3GVA** 089 232-••B	1390/920	63.0/58.0	0.85/0.80	1.6/1.15	3.3/3.2	4/3.85	1.5/1.5	1.6/1.6	0.0022	10
0.7/0.45	**M3VA 80 C**	**3GVA** 089 233-••B	1390/925	65.0/60.0	0.85/0.78	1.85/1.4	3.4/3.4	4.82/4.66	1.6/1.7	1.7/1.8	0.0025	10
0.8/0.5	**M3AA 90 S**	**3GAA** 098 216-••E	1430/940	68.0/57.0	0.80/0.66	2.2/2	3.9/2.8	5.3/5	1.5/1.4	2.1/2.1	0.0032	13
1.2/0.75	**M3AA 90 L**	**3GAA** 098 217-••E	1430/940	73.0/63.0	0.81/0.67	3/2.6	4.4/3.1	8/7.6	1.7/1.5	2.3/2.1	0.0043	16
1.5/0.9	**M3AA 100 LA**	**3GAA** 108 214-••E	1440/960	75.0/69.0	0.84/0.65	3.5/3	4.7/3.8	9.9/8.9	1.5/1.5	2.2/2.4	0.0069	20
1.8/1.1	**M3AA 100 LB**	**3GAA** 108 215-••E	1460/960	77.0/70.0	0.78/0.64	4.4/3.6	5.8/3.9	11/11	2.1/1.6	3/2.5	0.0082	23
2.6/1.7	**M3AA 112 M**	**3GAA** 118 202-••C	1445/960	80.0/73.0	0.86/0.76	5.5/4.4	5.9/5.2	17.2/16.9	1.5/1.5	2.2/2.4	0.018	33
3.3/2.2	**M3AA 132 S**	**3GAA** 138 223-••C	1470/980	82.0/76.0	0.82/0.65	7.1/6.4	6.8/4.6	21.4/21.4	1.4/1.2	2.5/2.4	0.038	48
4.5/3	**M3AA 132 M**	**3GAA** 138 224-••C	1470/980	82.0/77.0	0.85/0.70	9.3/8	7.2/5.6	29.2/29.2	1.4/1.5	2.3/2.6	0.048	59
7.5/5.5	**M3AA 160 M**	**3GAA** 168 361-••C	1465/965	85.5/80.5	0.83/0.77	15.5/13	7.1/4.7	49/54	2.1/1.8	2.7/1.9	0.089	93
11.5/8.5	**M3AA 160 L**	**3GAA** 168 362-••C	1465/965	86.5/82.5	0.84/0.76	23/19.5	7/4.9	75/84	2.1/1.8	2.8/2	0.119	117
13/8	**M3AA 180 M**	**3GAA** 188 353-••C	1475/975	88.0/82.5	0.82/0.75	26/19	6.5/4.3	84/78	1.9/1.4	2.6/1.8	0.176	131
15/10	**M3AA 180 L**	**3GAA** 188 354-••C	1475/975	88.5/84.0	0.83/0.74	30/23	7.1/4.4	97/98	2.3/1.5	2.7/1.9	0.224	159
18/12	**M3AA 200 MLA**	**3GAA** 208 204-••C	1475/985	88.5/86.0	0.91/0.86	33/24	7.6/7.8	117/116	2.1/2.6	2.5/2.6	0.42	185
22/14.7	**M3AA 200 MLB**	**3GAA** 208 205-••C	1480/985	89.5/86.5	0.89/0.87	40/29	8.2/7.6	142/143	2.4/2.6	2.8/2.5	0.48	200
25/16.7	**M3AA 200 MLC**	**3GAA** 208 206-••C	1475/980	89.0/85.5	0.87/0.88	47/32	7.7/6.7	162/162	2.3/2.3	2.6/2.2	0.48	200
32/21	**M3AA 225 SMB**	**3GAA** 228 203-••C	1480/985	90.0/89.5	0.88/0.86	58/40	8.6/8	206/204	2.3/2.4	2.8/2.7	0.63	225
36/24	**M3AA 225 SMC**	**3GAA** 228 204-••C	1480/985	90.5/90.0	0.88/0.87	66/45	8.4/7.4	232/233	2.2/2.2	2.8/2.5	0.74	250
50/32	**M3AA 250 SMB**	**3GAA** 258 202-••C	1475/985	92.5/90.5	0.89/0.80	89/65	7.5/7.1	324/310	2.3/3.1	2.6/2.6	0.89	335

Data for motor size 280 on request.

The bullets in the product code indicate choice of mounting arrangement, voltage and frequency, generation code (see ordering information page).

General purpose aluminum motors

Technical data for totally enclosed squirrel cage three phase motors, two-speed

IP 55 – IC 411 – Insulation class F, temperature rise class F

Output kW	Motor type	Product code	Speed r/min	Effi-ciency %	Power factor cos φ	Current I_N A	Current I_s/I_N	Torque T_N Nm	Torque T_s/T_N	Torque T_{max}/T_N	Moment of inertia J=1/4 GD² kgm²	Weight kg
1500/750 r/min = 4/8 poles			**400 V 50 Hz**								**Constant torque, two separate windings**	
0.28/0.14	**M3VA 80 A**	**3GVA** 089 241-••B	1425/700	60.0/50.0	0.77/0.68	0.9/0.6	4/3	1.88/1.92	1.9/1.9	2.2/2	0.0019	9
0.38/0.19	**M3VA 80 B**	**3GVA** 089 242-••B	1430/705	64.0/52.0	0.77/0.68	1.1/0.8	4.2/3.1	2.55/2.58	2/2	2.4/2	0.0022	10
0.46/0.23	**M3VA 80 C**	**3GVA** 089 243-••B	1430/710	66.0/55.0	0.78/0.65	1.3/0.95	4.3/3.3	3.1/3.1	2/2.1	2.4/2.2	0.0025	11
0.55/0.25	**M3AA 90 S**	**3GAA** 098 219-••E	1450/700	62.0/51.0	0.78/0.59	1.9/1.2	4.2/2.3	3.6/3.4	1.3/1.4	2.2/2.1	0.0032	13
0.75/0.37	**M3AA 90 L**	**3GAA** 098 220-••E	1450/700	66.0/57.0	0.75/0.57	2.2/1.7	4.1/2.5	4.9/5	1.4/1.5	2.4/2.2	0.0043	16
1.1/0.55	**M3AA 100 LA**	**3GAA** 108 217-••E	1460/710	68.0/62.0	0.77/0.61	3.1/2.2	4.2/2.6	7.2/7.4	1.2/1.2	2.3/1.9	0.0069	20
1.5/0.75	**M3AA 100 LB**	**3GAA** 108 218-••E	1440/700	72.0/60.0	0.82/0.60	3.7/2.9	4.6/2.7	9.8/10	1.3/1.2	2.2/1.9	0.0082	23
1.8/0.9	**M3AA 112 M**	**3GAA** 118 203-••C	1470/715	77.0/65.0	0.76/0.66	4.4/3	6.5/4	11.7/12	1.2/1.6	2.2/2.4	0.018	32
2.5/1.3	**M3AA 132 S**	**3GAA** 138 225-••C	1470/730	80.0/69.0	0.79/0.58	5.7/4.7	6.7/4.4	16.2/17	1.6/1.4	2.6/2.7	0.038	48
3.3/1.7	**M3AA 132 M**	**3GAA** 138 226-••C	1470/725	81.0/71.0	0.83/0.67	7.1/5.2	8/4.8	21.4/22.4	1.8/1.8	2.7/2.2	0.048	59
5.5/2.7	**M3AA 160 M**	**3GAA** 168 363-••C	1465/730	85.0/71.0	0.83/0.57	11.5/9.6	5.6/4	36/35	1.7/2	2.2/2.3	0.089	92
9/4.5	**M3AA 160 L**	**3GAA** 168 364-••C	1465/730	86.5/73.5	0.83/0.56	18/16	7/4.1	59/59	2.1/2.1	2.7/2.5	0.119	117
14/7	**M3AA 180 L**	**3GAA** 188 356-••C	1475/735	88.0/76.0	0.83/0.56	28/24	7.7/4.2	91/91	2.6/2.3	2.9/2.3	0.225	159
18.5/9.4	**M3AA 200 MLA**	**3GAA** 208 207-••C	1475/730	89.5/82.5	0.85/0.65	35/26	7.3/4.3	120/123	2.2/1.9	2.5/1.8	0.28	180
22/11	**M3AA 200 MLB**	**3GAA** 208 208-••C	1480/735	90.5/83.0	0.84/0.60	42/32	8.4/4.7	142/143	2.6/2.4	2.9/2.2	0.34	205
28/14	**M3AA 225 SMB**	**3GAA** 228 205-••C	1480/735	90.0/85.5	0.85/0.61	53/39	7.7/4.9	181/182	2.1/2.4	2.7/2.2	0.41	230
34/17	**M3AA 225 SMC**	**3GAA** 228 206-••C	1480/735	92.0/87.0	0.86/0.66	63/43	7.9/4.8	219/221	2.2/2.2	2.7/2	0.49	265
50/25	**M3AA 250 SMB**	**3GAA** 258 203-••C	1480/740	92.5/88.0	0.87/0.60	90/68	8.6/6	323/323	2.6/3.5	3/2.9	0.89	335
1500/750 r/min = 4-8 poles			**400 V 50 Hz**								**Constant torque, Dahlander-connection**	
0.11/0.06	**M3VA 63 B**	**3GVA** 060 242-••A	1390/660	54.0/33.0	0.60/0.49	0.5/0.55	3/1.7	0.75/0.87	1.6/2.5	1.7/2.6	0.00026	4.5
0.18/0.11	**M3VA 71 A**	**3GVA** 070 241-••C	1380/680	54.0/37.0	0.70/0.53	0.7/0.8	3.2/2.5	1.24/1.54	1.9/2.2	2/2.3	0.00066	5.5
0.3/0.15	**M3VA 71 B**	**3GVA** 070 242-••C	1400/700	60.0/47.0	0.74/0.51	0.9/0.9	3.2/2.6	2.05/2.05	2/2.5	2.1/2.6	0.00089	6.5
0.45/0.25	**M3VA 80 A**	**3GVA** 080 241-••B	1380/700	65.0/48.0	0.87/0.58	1.15/1.3	3.5/2.7	3.12/3.42	1.7/2.1	1.7/2.1	0.0019	9
0.63/0.33	**M3VA 80 B**	**3GVA** 080 242-••B	1380/705	67.0/50.0	0.88/0.56	1.55/1.7	3.5/2.8	4.37/4.48	1.7/2.2	1.7/2.2	0.0022	10
0.75/0.37	**M3VA 80 C**	**3GVA** 080 243-••B	1390/710	70.0/52.0	0.86/0.51	1.8/2	3.9/2.9	5.16/4.98	1.9/2.5	1.9/2.5	0.0025	10
0.7/0.37	**M3AA 90 S**	**3GAA** 098 113-••E	1420/700	72.0/50.0	0.80/0.57	1.8/1.9	4.4/2.3	4.7/5.1	1.6/1.6	2.3/2.2	0.0032	13
1.1/0.55	**M3AA 90 L**	**3GAA** 098 114-••E	1390/685	70.0/55.0	0.84/0.58	2.6/2.6	4.1/2.3	7.4/7.5	1.4/1.5	2/2.1	0.0043	16
1.5/0.75	**M3AA 100 LA**	**3GAA** 108 112-••E	1440/710	76.0/62.0	0.85/0.57	3.4/3.2	4.6/2.8	10/10	1.4/1.5	2.2/2.2	0.0069	20
2/0.95	**M3AA 100 LB**	**3GAA** 108 113-••E	1440/710	78.0/64.0	0.86/0.55	4.4/4	4.8/2.9	13/12	1.4/1.6	2.2/2.3	0.0082	23
2.5/1.5	**M3AA 112 M**	**3GAA** 118 103-••C	1410/705	78.0/67.0	0.90/0.66	5.1/4.9	5.5/4.1	16.9/20.3	1.4/1.5	2.1/2.4	0.018	32
3.8/1.9	**M3AA 132 S**	**3GAA** 138 125-••C	1450/730	82.0/70.0	0.86/0.52	7.7/7.6	5.6/3.7	25/24.9	1.4/1.3	2.1/2.7	0.038	48
5/2.5	**M3AA 132 M**	**3GAA** 138 126-••C	1455/730	85.0/73.0	0.88/0.52	9.6/9.6	6.9/4.8	32.8/32.7	1.7/2	2.4/2.8	0.048	59
8/4.5	**M3AA 160 M**	**3GAA** 168 309-••C	1440/730	84.5/79.5	0.86/0.60	16/13.5	4.5/3.4	53/59	1.3/1.4	1.8/1.9	0.089	92
12/7	**M3AA 160 L**	**3GAA** 168 310-••C	1445/730	86.5/81.0	0.87/0.59	23/21	5/3.5	79/92	1.5/1.4	1.9/1.9	0.119	117
16/8	**M3AA 180 L**	**3GAA** 188 304-••C	1460/730	88.0/78.5	0.86/0.53	31/28	1.9/3.4	105/104	1.4/1.6	1.9/2.1	0.224	159
22/13	**M3AA 200 MLA**	**3GAA** 208 107-••C	1475/735	87.5/86.0	0.81/0.69	45/32	6.5/5.9	142/169	2/2.5	2.6/2.7	0.36	165
25/15	**M3AA 200 MLB**	**3GAA** 208 108-••C	1475/735	89.0/86.0	0.86/0.67	47/38	7.6/6	162/195	2.2/2.6	2.7/2.7	0.42	185
29/17	**M3AA 200 MLC**	**3GAA** 208 109-••C	1475/735	90.0/88.0	0.91/0.75	52/38	7.2/6.1	188/221	2.2/2.6	2.4/2.4	0.48	200
35/21	**M3AA 225 SMB**	**3GAA** 228 105-••C	1475/735	90.0/89.0	0.90/0.74	63/47	6.7/5.8	227/273	1.7/2.1	2.2/2.3	0.63	225
42/25	**M3AA 225 SMC**	**3GAA** 228 106-••C	1475/735	91.0/89.5	0.91/0.75	74/54	6.8/5.9	272/325	1.8/2.1	2.2/2.2	0.74	250
55/33	**M3AA 250 SMB**	**3GAA** 258 103-••C	1480/740	92.0/90.5	0.90/0.75	97/71	7.3/6.4	355/426	2.1/2.5	2.5/2.5	1.5	320
1000/750 r/min = 6/8 poles			**400 V 50 Hz**								**Constant torque, two separate windings**	
1.6/0.8	**M3AA 112 M**	**3GAA** 118 207-••C	965/725	72.9/60.0	0.70/0.64	4.5/3	5.6/4.4	15.8/10.6	2.3/2.3	2.6/2.4	0.015	35
2.3/1.3	**M3AA 132 S**	**3GAA** 138 213-••C	975/730	77.2/63.5	0.72/0.64	6.8/4.6	6.4/4.2	25.4/17	1.6/1.5	2.8/2.3	0.04	48
3.5/1.6	**M3AA 132 M**	**3GAA** 138 214-••C	975/730	78.8/65.8	0.72/0.66	9/5.2	7.1/5.1	34.2/20.9	2/1.9	2.9/2.4	0.041	48
16/12	**M3AA 200 MLB**	**3GAA** 208 219-••C	985/740	86.5/82.5	0.85/0.73	31/29	7/6.3	155/155	2.1/2.4	2.4/2.6	0.42	185
18/13.5	**M3AA 200 MLC**	**3GAA** 208 220-••C	985/740	87.5/83.5	0.83/0.72	36/32	7.9/6.6	174/174	2.5/2.6	2.8/2.8	0.48	200
23/17	**M3AA 225 SMB**	**3GAA** 228 213-••C	985/740	89.0/85.5	0.84/0.78	46/37	7.9/6.3	222/220	2.3/2.2	2.7/2.3	0.63	225
28/20	**M3AA 225 SMC**	**3GAA** 228 214-••C	985/740	89.0/86.5	0.86/0.77	57/43	7.1/6.5	272/259	2/2.3	2.4/2.4	0.74	250
37/27	**M3AA 250 SMB**	**3GAA** 258 207-••C	990/740	90.0/87.5	0.83/0.75	71/59	7.8/6.7	357/348	2.3/2.5	2.7/2.5	1.41	320

General purpose aluminum motors - Variant codes

Code [1]	Variant	Motor size 56-63	71-80	90-100	M2AA 112-132	M2AA 160-200	M2AA 225-250	M3AA 112-132	M3AA 160-180	M3AA 200-250	M3AA 280
	Balancing										
052	Vibration acc. to Grade A (IEC 60034-14).	P	P	P	P	P	P	P	P	P	P
417	Vibration acc. to Grade B (IEC 60034-14).	NA	NA	NA	R	R	R	R	R	R	R
423	Balancing without key.	P	P	P	R	R	R	R	R	R	R
424	Full key balancing.	P	P	P	P	P	P	P	P	P	P
	Bearings and lubrication										
036	Transport lock for bearings.	NA	NA	M	M	M	M	M	M	M	M
037	Roller bearing at D-end. Transport lock included.	NA	NA	M	NA	M	M	NA	M	M	M
039	Cold resistant grease. For ambient temperatures -40 - +100° C.	M	M	M	M	M	M	M	M	M	M
040	Heat resistant grease. For bearing temperatures -40 - +160° C. Mandatory for ambient temperatures >50° C.	M	M	M	S	S	S	S	S	S	S
041	Bearings regreasable via grease nipples.	NA	NA	M	M	M	S	M	M	S	S
042	Locked drive-end. Standard for sizes 90-132, flanged versions.	NA	M	S	M	S	S	M	S	S	S
043	SPM nipples.	NA	NA	R	M	M	M	M	M	M	M
057	2RS bearings at both ends. Grease for bearing temperatures -20 - +110° C.	M	M	M	M	R	R	M	M	M	M
058	Angular contact ball bearing at D-end, shaft force away from bearing. Transport lock included.	NA	NA	M	M	R	R	M	M	M	M
059	Angular contact ball bearing at N-end, shaft force towards bearing. Transport lock included.	NA	NA	M	M	R	R	M	M	M	M
107	Bearing mounted PT100 resistance elements.	NA	NA	NA	NA	NA	NA	NA	R	R	R
188	63-series bearings.	NA	NA	M	M	S	S	M	S	S	S
796	Grease nipples JIS B 1575 PT 1/8 Type A. Stainless steel.	NA	NA	NA	M	M	M	M	M	M	M
797	Stainless steel SMP nipples.	NA	NA	NA	M	M	M	M	M	M	M
798	Stainless steel grease nipples.	NA	NA	NA	M	M	M	M	M	M	M
	Branch standard designs										
071	Cooling tower duty. Only motors with shaft extensions downwards.	NA	NA	NA	P	P	P	P	P	P	P
079	Silumin-alloy rotor cage.	NA	P	P	R	R	R	R	R	R	R
142	”Manilla” winding connection. (440 VD series, 220 VD parallel, 60Hz) Single speed motors only.	NA	NA	P	P	P	P	P	P	P	P
178	Stainless steel/acid proof bolts.	M	M	M	M	M	M	M	M	M	M
199	Extreme heavy duty design. Type designation M2AP or M3AP.	NA	NA	NA	M	NA	NA	M	M	M	M
209	Non-standard voltage or frequency (special winding).	P	P	P	P	P	P	P	P	P	P
416	High speed design.	NA	NA	NA	R	R	R	R	R	R	R
425	Corrosion protected stator and rotor core.	P	P	P	P	R	R	P	P	P	P
785	Reinforced tropicalisation.	NA	NA	NA	R	R	R	R	R	R	R
	Cooling system										
053	Metal fan cover. The dimension L1 and L2 respectively is increased by 7.5 mm for the frame size 112 and 5.5 mm for the frame size 132.	S	S	S	M	S	S	M	S	S	S
068	Metal fan. Mandatory for ambient temperatures: For sizes 71-100, ≥ 80 °C; sizes 112-132, > 50 °C; sizes 160-250, > 80 °C	NA	M	M	M	M	M	M	M	M	M
075	Cooling method IC418 (without fan).	P	P	P	R	R	R	R	R	R	R
183	Separate motor cooling (fan axial, N-end).	NA	M	R	NA	R	R	NA	M	M	M
189	Separate motor cooling, IP44, 400V, 50Hz (fan axial, N-end)	NA	NA	NA	M	M	M	M	M	M	M

[1] Certain variant codes cannot be used simultaneously.

S = Included as standard.
M = On modification of a stocked motor, or on new manufacture, the number per order may be limited.
P = New manufacture only.
R = On request.
NA = Not applicable.

Code [1]	Variant	Motor size 56-63	71-80	90-100	M2AA 112-132	M2AA 160-200	M2AA 225-250	M3AA 112-132	M3AA 160-180	M3AA 200-250	M3AA 280
793	Fan for reduced noise level (2-p fan).	NA	NA	NA	R	R	R	R	R	R	R
794	Fan for reduced noise level (4-p fan).	NA	NA	NA	R	R	R	R	R	R	R
	Coupling										
035	Assembly of customer supplied coupling-half.	NA	NA	NA	R	R	R	R	R	R	R
	Dimension drawing										
141	Binding dimension drawing	M	M	M	M	M	M	M	M	M	M
	Drain holes										
065	Plugged drain holes.	M	M	M	M	M	M	M	M	M	M
066	Modified drain hole position. IP 54 for sizes 63-100. Specify IM designation.	M	M	M	M	M	M	M	M	M	M
076	Drain holes with plugs. Holes are sealed with a felt plug. Corrosion protected rotor. IP 55. IM designation must be stated.	S	S	NA	NA	NA	NA	NA	NA	NA	NA
	Earthing bolt										
067	External earthing bolt. Earthing screw for connection of external protective earth.	M	M	M	M	M	M	M	M	M	M
	Hazardous environments										
	See catalogue 'Motors for Hazardous Environments' for details.										
	Heating elements										
	Motor size / Element capacity										
	56-71 / 8 W										
	80-160 / 25 W										
	180-280 / 50 W										
450	Heating element 100-120 V.	M	M	M	M	M	M	M	M	M	M
451	Heating element 200-240 V.	M	M	M	M	M	M	M	M	M	M
	Insulation systems										
014	Winding insulation class H.	P	P	P	P	P	P	P	P	P	P
405	Special winding insulation for frequency converter supply rated voltage >500 V.	NA	NA	R	P	R	R	P	P	P	P
406	Winding for supply > 690 ≥ 1000 V.	NA	NA	NA	NA	NA	NA	R	R	P	P
	Marine Motors										
	See catalogue "Marine Motors" for details.										
	Mounting arrangements										
	NOTE: Multiple flange sizes available using two-piece flange system, see page 48.										
007	IM 3001 flange mounted, IEC flange, from IM 1001 (B5 from B3). Large flange with clearance holes.	NA	M	M	NA	R	M	NA	NA	M	M
008	IM 2101 foot/flange mounted, IEC flange, from IM 1001 (B34 from B3). Small flange with tapped holes. Frame size 180 not available.	NA	M	M	M	R	NA	M	R	NA	NA
009	IM 2001 foot/flange mounted, IEC flange, from IM 1001 (B35 from B3). Large flange with clearance holes.	M	M	M	M	M	M	M	M	M	M
047	IM 3601 flange mounted, IEC flange, from IM 3001 (B14 from B5), flange mounted motor with large flange. Small flange with tapped holes. Frame size 180 not available.	M	M	M	M	R	NA	M	R	NA	NA
048	IM 3001 flange mounted, IEC flange, from IM 3601 (B5 from B14), flange mounted motor with small flange. Large flange with clearance holes.	M	M	M	M	NA	NA	M	NA	NA	NA

[1] Certain variant codes cannot be used simultaneously.

S = Included as standard.
M = On modification of a stocked motor, or on new manufacture, the number per order may be limited.
P = New manufacture only.
R = On request.
NA = Not applicable.

2

Code [1]	Variant	Motor size 56-63	71-80	90-100	M2AA 112-132	M2AA 160-200	M2AA 225-250	M3AA 112-132	M3AA 160-180	M3AA 200-250	M3AA 280
078	(IM 3601) Flange mounted, DIN C-flange. Small flange with tapped holes. Larger flange than standard version.	NA	P	NA	NA	NA	NA	NA	NA	NA	NA
080	(IM 3001) Flange mounted, DIN A-flange. Large flange with clearance holes. Larger flange than standard version.	NA	P	NA	NA	NA	NA	NA	NA	NA	NA
090	(IM 2101) foot/flange mounted, DIN C-flange, from IM 1001 (B34 from B3). Small flange with tapped holes. Larger flange than standard version.	NA	P	NA	NA	NA	NA	NA	NA	NA	NA
091	(IM 2001) foot/flange mounted, DIN A-flange, from IM 1001 (B35 from B3). Large flange with clearance holes. Larger flange than standard version.	NA	P	NA	NA	NA	NA	NA	NA	NA	NA
200	Flange ring holder.	NA	P	M	R	NA	NA	R	R	R	R
217	Cast iron D-end shield (on aluminum motor).	NA	NA	M	R	R	R	M	M	M	M
218	Flange ring FT 85 (NA for frame size 100).	NA	P	M	NA	NA	NA	NA	NA	NA	NA
219	Flange ring FT 100 (NA for frame size 100.	NA	P	M	NA	NA	NA	NA	NA	NA	NA
220	Flange ring FF 100 (NA for frame size 100).	NA	P	M	NA	NA	NA	NA	NA	NA	NA
223	Flange ring FF 115 (NA for frame size 100).	NA	P	M	NA	NA	NA	NA	NA	NA	NA
224	Flange ring FT 115 (NA for frame size 100).	NA	P	M	NA	NA	NA	NA	NA	NA	NA
226	Flange ring FF 130.	NA	P	M	NA	NA	NA	NA	NA	NA	NA
227	Flange ring FT 130.	NA	P	M	NA	NA	NA	NA	NA	NA	NA
233	Flange ring FF 165.	NA	P	M	NA	NA	NA	NA	NA	NA	NA
234	Flange ring FT 165.	NA	P	M	NA	NA	NA	NA	NA	NA	NA
243	Flange ring FF 215 (NA for frame size 90).	NA	NA	M	NA	NA	NA	NA	NA	NA	NA
244	Flange ring FT 215 (NA for frame size 90).	NA	NA	M	NA	NA	NA	NA	NA	NA	NA
304	PAD mounted according to BS 4999-141.	NA	NA	NA	R	NA	NA	R	NA	R	R
	Painting										
114	Special paint colour, standard grade.	M	M	M	M	M	M	M	M	M	M
179	Special paint specification.	NA	NA	R	R	R	R	R	R	R	R
	Protection										
005	Protective roof, vertical motor, shaft down. Vertically mounted motors with shaft extension downwards. See also the Accessories section for further information.	M	M	M	M	M	M	M	M	M	M
072	Radial seal at D-end.	P	P	M	R	R	R	P	M	M	M
073	Sealed against oil at D-end.	P	P	NA	NA	NA	NA	NA	NA	NA	NA
158	Degree of protection IP65 or IP65X. Dust proof version.	M	P	P	M	M	M	M	M	M	M
211	Weather protected, IP xx W	NA	NA	P	NA	NA	NA	NA	NA	NA	NA
403	Degree of protection IP 56. Water from waves which splash over must not enter in serious quantities.	M	P	P	M	M	M	M	M	M	M
784	Gamma-seal at D-end.	NA	NA	NA	R	R	R	M	M	M	M
	Rating and instruction plates										
002	Restamping voltage, frequency, and output. Continuous duty. All data to be specified in the order.	M	M	M	M	M	M	M	M	M	M
003	Individual serial number.	P	P	M	M	M	M	M	M	M	M
004	Additional text on std rating plate (max 12 digits on free text line).	NA	NA	NA	M	M	M	M	M	M	M
095	Restamping of output. Maintained voltage and frequency. Intermittent duty. All data to be specified in order.	M	M	M	M	M	M	M	M	M	M
098	Stainless rating plate.	M	M	M	M	R	R	M	M	M	M
135	Mounting of additional identification plate, stainless.				NA	NA	NA	R	R	R	R
138	Mounting of additional identification plate, aluminium.	M	M	M	M	M	M	M	M	M	M

[1] Certain variant codes cannot be used simultaneously.

S = Included as standard.
M = On modification of a stocked motor, or on new manufacture, the number per order may be limited.
P = New manufacture only.
R = On request.
NA = Not applicable

Code [1]	Variant	Motor size 56-63	71-80	90-100	M2AA 112-132	M2AA 160-200	M2AA 225-250	M3AA 112-132	M3AA 160-180	M3AA 200-250	M3AA 280
139	Additional indentification plate delivered loose.	M	M	M	M	M	M	M	M	M	M
160	Additional rating plate affixed.	M	M	M	R	R	R	R	R	R	R
161	Additional rating plate delivered loose.	M	M	M	M	M	M	M	M	M	M
163	Frequency converter rating plate. Rating data according to quotation.	NA	NA	NA	M	M	M	M	M	M	M
198	Aluminium rating plate.	S	S	S	R	S	S	R	S	S	S
	Shaft and rotor										
069	Two shaft extensions as per basic catalogue. Standard shaft material.	P	P	P	P	R	R	P	P	P	P
070	One or two special shaft extensions, standard shaft material.	P	P	P	R	R	R	R	R	R	R
131	Motor delivered with half-key (key not exceeding shaft material).				M	M	M	M	M	M	M
165	Shaft extension with open key-way.	P	P	P	P	NA	NA	P	P	P	P
410	Stainless/acid-proof steel shaft, standard or non-standard design. One or two shaft extensions.	P	P	P	R	R	R	R	R	R	R
	Standards and regulations										
010	Fulfilling CSA Safety Certificate.	P	P	P	M	R	R	M	M	M	M
011	Fulfilling CSA. Energy efficiency verification (010 included). For frame sizes 90-100 own product code, contact ABB.	NA	NA	NA	NA	NA	NA	M	M	M	M
029	Fulfilling Underwriters Laboratory (UL) requirements.	P	P	P	NA	NA	NA	NA	NA	NA	NA
408	Energy efficient design, according to IEEE, Std 112	NA	NA	R	NA	NA	NA	M	M	M	NA
778	Gost R Export/Import Certificate (Russia)	R	R	NA	M	M	M	M	M	M	M
779	SASO Export/Import Certificate (Saudi Arabia)	R	R	NA	M	M	M	M	M	M	M
	Stator winding temperature sensors										
121	Bimetal detectors, break type (NCC), (3 in series), 130°C, in stator winding. Two-speed motors for only new manufacture.	M	M	M	M	M	M	M	M	M	M
122	Bimetal detectors, break type (NCC), (3 in series), 150°C, in stator winding. Two-speed motors for only new manufacture.	M	M	M	M	M	M	M	M	M	M
123	Bimetal detectors, break type (NCC), (3 in series), 170°C, in stator winding. Two-speed motors for only new manufacture.	M	M	M	M	M	M	M	M	M	M
124	Bimetal detectors, break type (NCC), (3 in series), 140°C, in stator winding. Two-speed motors for only new manufacture.	M	M	NA	M	M	M	M	M	M	M
125	Bimetal detectors, break type (NCC), (2 x 3 in series), 150°C, in stator winding. Two-speed motors only for new manufacture.	M	M	M	M	M	M	M	M	M	M
127	Bimetal detectors, break type (NCC), (3 in series, 130°C & 3 in series, 150°C), in stator winding. Two-speed motors only for new manufacture.	M	M	M	M	M	M	M	M	M	M
321	Bimetal detectors, closing type (NO), (3 in parallel), 130°C, in stator winding.	NA	NA	P	R	NA	NA	R	R	R	R
322	Bimetal detectors, closing type (NO), (3 in parallel), 150°C, in stator winding.	NA	NA	P	R	R	R	R	R	R	R
323	Bimetal detectors, closing type (NO), (3 in parallel), 170°C, in stator winding.	NA	NA	P	R	R	R	R	R	R	R
325	Bimetal detectors, closing type (NO), (2x3 in parallel), 150°C, in stator winding.	NA	NA	P	R	R	R	R	R	R	R
435	PTC - thermistors, (3 in series), 130°C, 3 in stator winding. Two-speed motors only for new manufacture.	M	M	M	M	M	M	M	M	M	M
436	PTC thermistors, 150°C, 3 in series. Motor sizes 160-180 as modification. Two-speed motors only for new manufacture.	M	M	M	M	M	S	M	M	S	S
437	PTC - thermistors, (3 in series), 170°C, in stator winding. Two-speed motors only for new manufacture.	M	M	M	M	M	M	M	M	M	M
439	PTC - thermistors, (2x3 in series), 150°C, in stator winding. Two-speed motors only for new manufacture.	M	M	M	M	M	M	M	M	M	M

[1] Certain variant codes cannot be used simultaneously.

S = Included as standard.
M = On modification of a stocked motor, or on new manufacture, the number per order may be limited.
P = New manufacture only.
R = On request.
NA = Not applicable.

2

Code [1]	Variant	Motor size 56-63	71-80	90-100	M2AA 112-132	M2AA 160-200	M2AA 225-250	M3AA 112-132	M3AA 160-180	M3AA 200-250	M3AA 280
440	PTC - thermistors, (3 in series, 110 °C, & 3 in series, 130°C), in stator winding. Two-speed motors only for new manufacture.	M	M	M	R	R	R	R	R	R	R
441	PTC - thermistors, (3 in series, 130 °C, & 3 in series, 150°C), in stator winding. Two-speed motors only for new manufacture.	M	M	M	M	M	M	M	M	M	M
442	PTC - thermistors, (3 in series, 150 °C & 3 in series, 170°C), in stator winding. Two-speed motors only for new manufacture.	M	M	R	M	M	M	M	M	M	M
445	PT100 (1 per phase) in stator winding. Measurement current max. 10 mA. Temperature: 0 10 20 50 100 150 °C. Resistance: 100 103.9 107.7 119.3 128.5 158 Ohm. Monitoring unit, more information from ABB.	NA	NA	R	M	M	M	M	M	M	M
446	PT100 (2 per phase) in stator winding. Measurement current max. 10 mA. Temperature: 0 10 20 50 100 150 °C. Resistance: 100 103.9 107.7 119.3 128.5 158 Ohm. Monitoring unit, more information from ABB.	NA	NA	R	NA	M	M	NA	M	M	M
	Terminal box										
015	Motor supplied in D-connection. Single speed motors only.	M	M	M	M	M	M	M	M	M	M
017	Motor supplied in Y-connection. Single speed motors only.	M	M	M	M	M	M	M	M	M	M
018	D connection in terminal box (reconnection from Y.) Single phase Steinmetz.	NA	NA	NA	NA	NA	NA	NA	NA	NA	NA
019	Larger than standard terminal box. Standard for frame size 280, and for sizes 200-250 by voltage code S.	NA	NA	NA	M	M	M	M	M	M	NA
021	Terminal box on left-hand side, seen from D-end.	NA	M	M	NA	NA	R	NA	NA	P	P
112	Mounting of plug-in contact.	NA	NA	R	R	NA	NA	R	NA	NA	NA
136	Extended cable connection, standard terminal box. 2 m long connection cable.	P	P	R	R	R	R	R	R	R	R
137	Extended cable connection, low terminal box, 'flying leads'.	NA	NA	P	NA	NA	NA	NA	NA	NA	NA
180	Terminal box on right-hand side, seen from D-end.	NA	M	M	NA	NA	R	NA	NA	P	P
187	Cable glands of non-standard design.	NA	NA	NA	R	R	R	R	R	R	R
230	Standard cable glands.	M	M	M	M	M	M	M	M	M	M
402	Terminal box adapted for Al cables.	NA	NA	NA	NA	NA	NA	NA	NA	P	P
413	Extended cable connection, no terminal box.	NA	NA	NA	NA	NA	R	NA	NA	R	R
418	Separate terminal box for temperature detectors.	NA	NA	R	M	M	M	M	M	M	M
467	Lower than standard terminal box and rubber extended cable. Terminal box without screw terminals and extended rubber connection cable, 2 m.	NA	NA	NA	M	R	R	M	M	M	M
468	Non-standard cable entry direction (please state direction).	NA	NA	NA	R	R	R	R	R	R	R
469	Axial cable entry direction, terminal box 4x90° turnable.	NA	NA	NA	R	R	R	R	R	R	R
729	Cable flanges without holes / blank gland plates.	NA	NA	NA	NA	NA	M	NA	NA	M	M
731	Two standard cable glands.	NA	M	M	M	M	M	M	M	M	M
739	Prepared for metric cable glands according to DIN 429225, draft Aug. 1999.	NA	NA	NA	M	S	R	M	S	M	S
740	Prepared for PG cable glands.	NA	NA	NA	M	R	R	M	M	M	M
	Testing										
140	Test confirmation.	M	M	M	M	M	M	M	M	M	M
145	Type test report from catalogue motor, 400 V 50 Hz.	M	M	M	M	M	M	M	M	M	M
146	Type test with report for motor from specific delivery batch.	P	P	P	M	M	M	M	M	M	M
147	Type test report with motor from specific delivery batch, customer witnessed.	P	P	P	M	M	M	M	M	M	M
148	Routine test report.	P	P	M	M	M	M	M	M	M	M
149	Test according to separate test specification.	NA	NA	R	R	R	R	R	R	R	R
153	Reduced test for classification society.	P	P	P	M	M	M	M	M	M	M

[1] Certain variant codes cannot be used simultaneously.

S = Included as standard.
M = On modification of a stocked motor, or on new manufacture, the number per order may be limited.
P = New manufacture only.
R = On request.
NA = Not applicable.

Code [1]	Variant	Motor size 56-63	71-80	90-100	M2AA 112-132	M2AA 160-200	M2AA 225-250	M3AA 112-132	M3AA 160-180	M3AA 200-250	M3AA 280
221	Type test and multi-point load test with report for motor from specific delivery batch.	R	R	P	M	M	M	M	M	M	M
222	Torque/speed curve, type test and multi-point load test with report from specific delivery batch.	R	R	P	M	M	M	M	M	M	M
760	Vibration level test.	P	P	R	M	M	M	M	M	M	M
761	Vibration spectrum test.	NA	NA	NA	R	R	R	R	R	R	R
762	Noise level test.	P	P	R	M	M	M	M	M	M	M
763	Noise spectrum test.	NA	NA	M	R	R	R	R	R	R	R
764	Complete test with ABB frequency converter.	NA	NA	R	R	R	R	R	R	R	R
	Variable speed drives										
	See also the Accessories section for further information.										
	For long cables, see code 405 "Insulation systems".										
701	Insulated bearing at N-end. For fan and pump duty up to 500 V.	NA	NA	NA	NA	NA	NA	NA	NA	M	M
704	EMC cable gland.	NA	NA	NA	M	R	R	M	M	M	M
	Separate motor cooling										
183	Separate motor cooling (fan axial, N-end).	NA	P	R	NA	R	R	NA	M	M	M
189	Separate motor cooling, IP44, 400V, 50Hz (fan axial, N-end).	NA	NA	NA	M	M	M	M	M	M	M
	Mounting of tacho; tacho not included										
182	Pulse sensor mounted as specified.	NA	NA	R	R	NA	NA	R	R	R	R
470	Prepared for hollow shaft pulse tacho. (Leine & Linde equivalent).	R	R	R	P	R	R	P	M	M	M
570	Prepared for hollow shaft pulse tacho (L&L 562).	NA	NA	R	P	M	M	P	M	M	M
	Mounting of tacho; tacho included										
472	1024 of pulse tacho, (Leine & Linde equivalent). Hollow shaft version.	R	R	R	P	R	R	P	M	M	M
473	2048 of pulse tacho. (Leine & Linde equivalent). Hollow shaft version.	R	R	R	P	R	R	P	M	M	M
572	1024 pulse tacho (L&L 562).	NA	NA	R	P	M	M	P	M	M	M
573	2048 pulse tacho (L&L 562).	NA	NA	R	P	M	M	P	M	M	M
	Separate motor cooling & prepared for tacho; tacho not included										
474	Separate motor cooling and prepared for hollow shaft pulse tacho. (Leine & Linde equivalent).	NA	NA	R	P	R	R	P	M	M	M
	Separate motor cooling & tacho; tacho included										
476	Separate motor cooling (fan axial, N-end) and 1024 pulse tacho. (Leine & Linde equivalent).	NA	NA	R	P	R	R	P	M	M	M
477	Separate motor cooling (fan axial, N-end) and 2048 pulse tacho. (Leine & Linde equivalent).	NA	NA	R	P	R	R	P	M	M	M
574	Separate motor cooling (fan axial, N-end) and prepared for hollow shaft tacho (L&L 562).	NA	NA	R	NA	R	R	NA	M	M	M
576	Separate motor cooling (fan axial, N-end) and 1024 pulse tacho (L&L 562).	NA	NA	R	NA	R	R	NA	M	M	M
577	Separate motor cooling (fan axial, N-end) and 2048 pulse tacho (L&L 562).	NA	NA	R	NA	R	R	NA	M	M	M
578	Separate motor cooling, IP44, 400V, 50Hz (fan axial, N-end) and prepared for hollow shaft tacho (L&L 562).	NA	NA	NA	P	M	M	P	M	M	M
580	Separate motor cooling, IP44, 400V, 50Hz (fan axial, N-end) and 1024 pulse tacho (L&L 562).	NA	NA	NA	P	M	M	P	M	M	M
581	Separate motor cooling, IP44, 400V, 50Hz (fan axial, N-end) and 2048 pulse tacho (L&L 562).	NA	NA	NA	P	M	M	P	M	M	M

[1] Certain variant codes cannot be used simultaneously.

S = Included as standard.
M = On modification of a stocked motor, or on new manufacture, the number per order may be limited.
P = New manufacture only.
R = On request.
NA = Not applicable.

2

Code [1]	Variant	Motor size 56-63	71-80	90-100	M2AA 112-132	M2AA 160-200	M2AA 225-250	M3AA 112-132	M3AA 160-180	M3AA 200-250	M3AA 280
	Y/D starting										
117	Terminals for Y/D start at both speeds (two speed motors with separate windings).	NA	NA	P	NA	NA	NA	NA	P	P	NA
118	Terminals for Y/D start at high speed (two speed motors with separate windings).	NA	NA	NA	P	NA	NA	P	NA	NA	NA

[1] Certain variant codes cannot be used simultaneously.

S = Included as standard.
M = On modification of a stocked motor, or on new manufacture, the number per order may be limited.
P = New manufacture only.
R = On request.
NA = Not applicable.

2

General purpose aluminum motors Sizes 56-100

Dimension drawings

Foot-mounted motor;
IM B3 (IM 1001), IM 1002

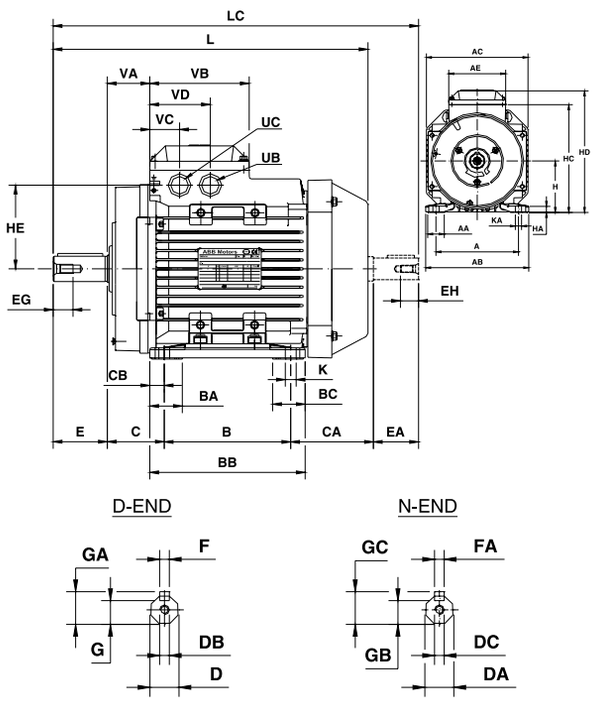

Flange-mounted motor, large flange;
IM B5 (IM 3001), IM 3002

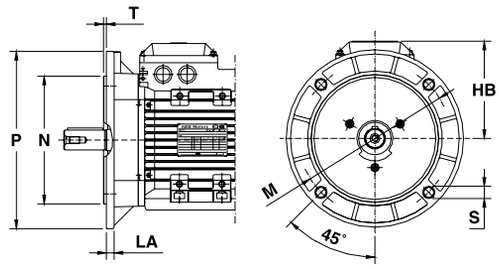

Flange-mounted motor, small flange;
IM B14 (IM 3601)

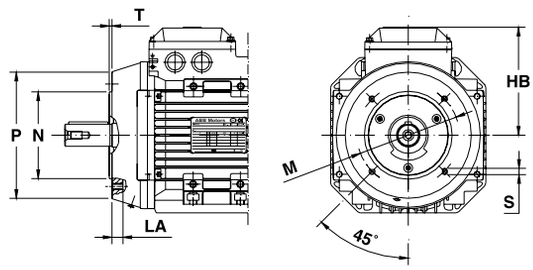

IM B3 (IM 1001), IM 1002

Motor size	A	AA	AB	AC	AE	B	BB	C	CA	CB	D	DA	DB	DC	E	EA	EG	EH	F	FA
56	90	18	108	110	72	71	85	36	78	7	9	9	M3	M3	20	20	9	9	3	3
63	100	26	120	120	72	80	96	40	71	8	11	11	M4	M4	23	23	10	10	4	4
71	112	24	136	130	85	90	110	45	78	10	14	11	M5	M4	30	23	13	10	5	4
80	125	28	154	150	97	100	125	50	80	12.5	19	14	M6	M5	40	30	16	13	6	5
90 S	140	27	170	177	110	100	125	56	81	12.5	24	14	M8	M5	50	30	19	12.5	8	5
90 L	140	27	170	177	110	125	150	56	81	12.5	24	14	M8	M5	50	30	19	12.5	8	5
100	160	32	197	197	110	140	172	63	91	16	28	19	M10	M6	60	40	22	19	8	6

Motor size	G	GA	GB	GC	H	HA	HC	HD	HE	K	KA	L	LC	UB	UC	VA	VB	VC	VD
56	7.2	10.2	7.2	10.2	56	8	110	159	71	5.8	9	197	225	Pg11	M16x1.5	30	72	26	53
63	8.5	12.5	8.5	12.5	63	10	120	171	76	7	11	205	237	Pg11	M16x1.5	36	72	26	53
71	11	16	8.5	12.5	71	9	130	176	63	7	10	238	266	Pg16	M20x1.5	35	92	22	57
80	15.5	21.5	11	16	80	10	150	190	67	10	15	265	300	Pg16	M20x1.5	37	100	26	61
90 S	20	27	11	16	90	11	177	217	82.5	10	14	282	317	M20x1.5	M25x1.5	43.5	110	33	67
90 L	20	27	11	16	90	11	177	217	82.5	10	14	307	342	M20x1.5	M25x1.5	43.5	110	33	67
100	24	31	15.5	21.5	100	12	198	237	92.5	12	15	349	394	M20x1.5	M25x1.5	47	110	33	67

IM B5 (IM 3001), IM 3002

Motor size	HB	LA	M	N	P	S	T
56	103	10	100	80	120	7	3
63	108	10	115	95	140	10	3
71	105	10	130	110	160	10	3.5
80	110	12	165	130	200	12	3.5
90	127	10	165	130	200	12	3.5
100	137	11	215	180	250	15	4

Tolerances:

A,B	+ - 0.8	**H**	+0 -0.5
D, DA	ISO j6	**N**	ISO j6
F, FA	ISO h9	**C, CA**	+- 0.8

IM B14 (IM 3601), IM 3602

Motor size	HB	LA	M	N	P	S	T
56	103	10	65	50	80	M5	2.5
63	108	10	75	60	90	M5	2.5
71	105	10	85	70	105	M6	2.5
80	110	10	100	80	120	M6	3
90	127	13	115	95	140	M8	3
100	137	14	130	110	160	M8	3.5

Above table gives the main dimensions in mm.

For detailed drawings please see our web-pages 'www.abb.com/motors&drives' or contact us.

General purpose aluminum motors Sizes 56-100

Dimension drawings

Foot- and flange-mounted motor;
IM B35 (IM 2001), IM 2002, large flange

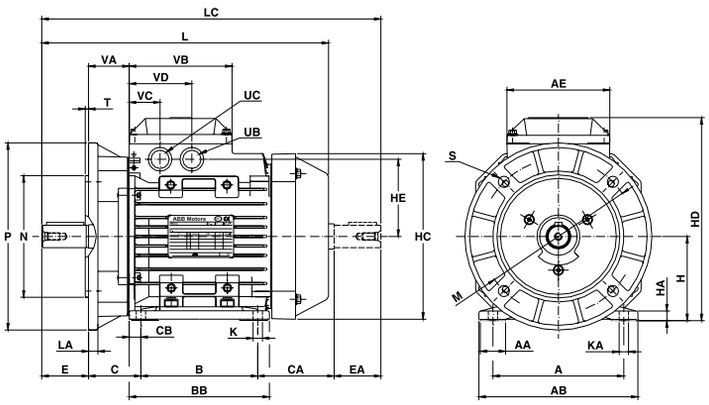

Foot- and flange-mounted motor;
IM B34 (IM 2101), IM 2102, small flange

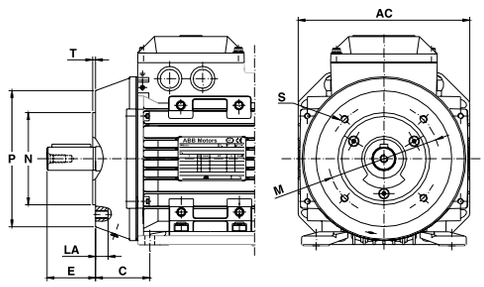

IM B35 (IM 2001),IM 2002, IM B34 (IM 2101), IM 2102

Motor size	A	AA	AB	AC	AE	B	BB	C	CA	CB	D	DA	DB	DC	E	EA	EG	EH	F	FA
56	90	18	108	110	72	71	85	36	78	7	9	9	M3	M3	20	20	9	9	3	3
63	100	26	120	120	72	80	96	40	71	8	11	11	M4	M4	23	23	10	10	4	4
71	112	24	136	130	85	90	110	45	78	10	14	11	M5	M4	30	23	13	10	5	4
80	125	28	154	150	97	100	125	50	80	12.5	19	14	M6	M5	40	30	16	13	6	5
90 S	140	27	170	177	110	100	125	56	81	12.5	24	14	M8	M5	50	30	19	12.5	8	5
90 L	140	27	170	177	110	125	150	56	81	12.5	24	14	M8	M5	50	30	19	12.5	8	5
100	160	32	197	197	110	140	172	63	91	16	28	19	M10	M6	60	40	22	19	8	6

Motor size	G	GA	GB	GC	H	HA	HC	HD	HE	K	KA	L	LC	UB	UC	VA	VB	VC	VD
56	7.2	10.2	7.2	10.2	56	8	110	159	71	5.8	9	197	225	Pg11	M16x1.5	30	72	26	53
63	8.5	12.5	8.5	12.5	63	10	120	171	76	7	11	205	237	Pg11	M16x1.5	36	72	26	53
71	11	16	8.5	12.5	71	9	130	176	63	7	10	238	266	Pg16	M20x1.5	35	92	22	57
80	15.5	21.5	11	16	80	10	150	190	67	10	15	265	300	Pg16	M20x1.5	37	100	26	61
90 S	20	27	11	16	90	10	177	217	82.5	10	14	282	317	M20x1.5	M25x1.5	43.5	110	33	67
90 L	20	27	11	16	90	10	177	217	82.5	10	14	307	342	M20x1.5	M25x1.5	43.5	110	33	67
100	24	31	15.5	21.5	100	12	197	237	92.5	12	15	349	394	M20x1.5	M25x1.5	47	110	33	67

IM B35 (IM 2001), IM 2002

Motor size	HB	LA	M	N	P	S	T
56	103	10	100	80	120	7	3
63	108	10	115	95	140	10	3
71	105	10	130	110	160	10	3.5
80	110	12	165	130	200	12	3.5
90	127	10	165	130	200	12	3.5
100	137	11	215	180	250	15	4

Tolerances:

A,B	+ - 0.8	**H**	+0 -0.5
D, DA	ISO j6	**N**	ISO j6
F, FA	ISO h9	**C, CA**	+- 0.8

IM B34 (IM 2101), IM 2102

Motor size	HB	LA	M	N	P	S	T
56	103	10	65	50	80	M5	2.5
63	108	10	75	60	90	M5	2.5
71	105	10	85	70	105	M6	2.5
80	110	10	100	80	120	M6	3
90	127	13	115	95	140	M8	3
100	137	14	130	110	160	M8	3.5

Above table gives the main dimensions in mm.

For detailed drawings please see our web-pages 'www.abb.com/motors&drives' or contact us.

Dimension drawings
Special design with two-piece flanges

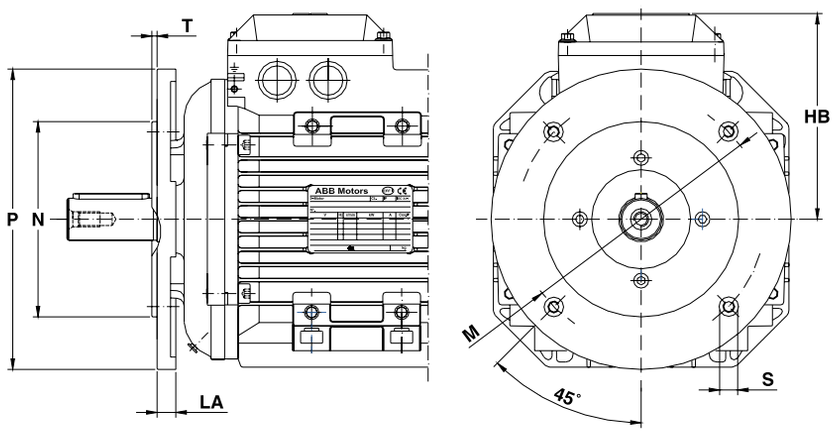

Motor size	IEC Flange	Flange dimensions HB	P	M	N	LA	S[2]	T	Variant code [1] FF	FT
71	FT85	105	105	85	70	7.5	M6	2.5	-	218
	FF100 / FT100	105	120	100	80	7.5	M6	3	220	219
	FF115 / FT115	105	140	115	95	9.5	M8	3	223	224
	FF130 / FT130	105	160	130	110	9.5	M8	3.5	226	227
	FF165 / FT165	105	200	165	130	10.5	M10	3.5	233	234
80	FT85	110	105	85	70	7.5	M6	2.5	-	218
	FF100 / FT100	110	120	100	80	7.5	M6	3	220	219
	FF115 / FT115	110	140	115	95	9.5	M8	3	223	224
	FF130 / FT130	110	160	130	110	9.5	M8	3.5	226	227
	FF165 / FT165	110	200	165	130	10.5	M10	3.5	233	234
90	FT85	127	105	85	70	7.5	M6	2.5	-	218
	FF100 / FT100	127	120	100	80	7.5	M6	3	220	219
	FF115 / FT115	127	140	115	95	9.5	M8	3	223	224
	FF130 / FT130	127	160	130	110	9.5	M8	3.5	226	227
	FF165 / FT165	127	200	165	130	10.5	M10	3.5	233	234
100	FF130 / FT130	137	160	130	110	9.5	M8	3.5	226	227
	FF165 / FT165	137	200	165	130	10.5	M10	3.5	233	234
	FF215 / FT215	137	250	215	180	12.5	M12	4	243	244

Data for smaller frame sizes on request.

[1] Variant code 200 'Flange ring holder' must be added when using the variant codes mentioned below.
[2] Flanges with clearance (FF) or tapped (FT) holes for indicated screws.

Tolerances:
N ISO j6

General purpose aluminum motors Sizes 112-132

Dimension drawings

Foot-mounted motor; IM B 3 (IM 1001), IM 1002

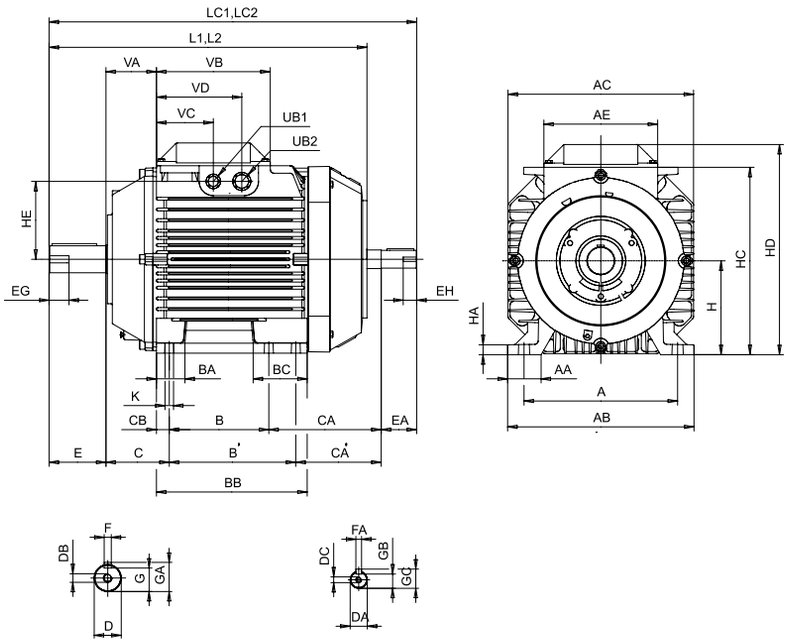

Flange-mounted motor, large flange; IM B 5 (IM 3001), IM 3002

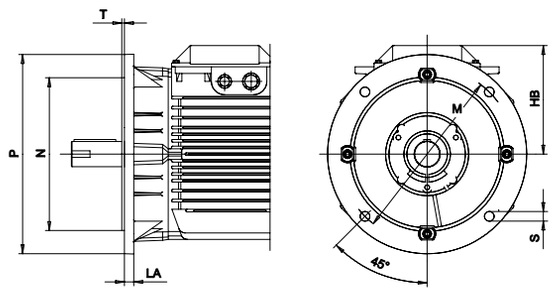

Flange-mounted motor, small flange; IM B 14 (IM 3601), IM 3602

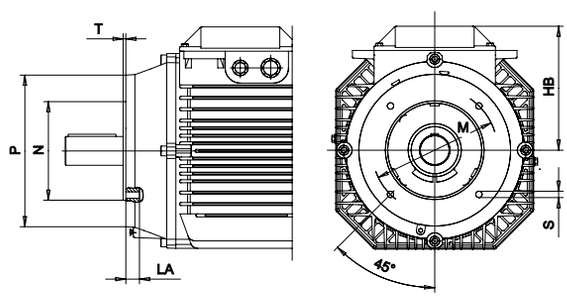

IM B 3 (IM 1001)

Motor size	A	AA	AB	AC	AE	B	B'	BA	BB	BC	C	CA	CA'	CB	D	DA	DB	DC	E[B]	EA	EG	EH	F	FA
112[1]	190	41	222	221	160	140	-	31	168	31	70	115.5	-	14	28	19	M10	M8	60	40	22	19	8	6
112[2]	190	41	222	221	160	140	-	31	168	31	70	138	-	14	28	19	M10	M8	60	40	22	19	8	6
132[3]	216	47	262	261	160	140	178[A]	40	212	76	89	158	120	18	38	24	M12	M8	80	50	28	19	10	8
132[4]	216	47	262	261	160	140[A]	178	40	212	76	89	191	153	18	38	24	M12	M8	80	50	28	19	10	8

Motor size	G	GA	GB	GC	H	HA	HC	HD	HE	K	L	L1	L2	LC	LC1	LC2	UB1[C]	UB2[C]	VA	VB	VC[D]	VD1	VD2
112[1]	24	31	15.5	21.5	112	12	226	258	92	12	361[F]	361[F]	361[F]	421.5	421.5	421.5	M20	M25	60	160	80	120	40
112[2]	24	31	15.5	21.5	112	12	226	258	92	12	388[F]	388[F]	388[F]	448	448	448	M20	M25	60	160	80	120	40
132[3]	33	41	20	27	132	14	263.5	295.5	109.5	12	447[G]	447[G]	447[G]	517	517	517	M20	M25	71	160	80	120	40
132[4]	33	41	20	27	132	14	263.5	295.5	109.5	12	481.5[G]	481.5[G]	481.5[G]	550	550	550	M20	M25	71	160	80	120	40

IM B 5 (IM 3001)

Motor size	HB	LA	M	N	P	S	T
112[1]	146	11	215	180	250	14.5	4
112[2]	146	11	215	180	250	14.5	4
132[3]	163.5	14	265	230	300	14.5	4
132[4]	163.5	14	265	230	300	14.5	4

IM B14 (IM 3601)

Motor size	HB	LA	M	N	P	S	T
112[1]	146	20	130	110	160	M8	3.5
112[2]	146	20	130	110	160	M8	3.5
132[3]	163.5	18	165	130	200	M10	3.5
132[4]	163.5	18	165	130	200	M10	3.5

Tolerances

A, B	ISO js14
C, CA	+2 -2
D28	ISO j6
D38	ISO k6
DA	ISO j6
F, FA	ISO h9
H	+0 -0.5
N	ISO j6

[1] M2AA: M-2, M-4. M3AA: M-6, M8
[2] all 112 excl [1]
[3] M2AA: SA-2, SB-2, S-4, M-4. M3AA: SA-2, S-4, S-6, MA-6, MB-6, S-8, M-8, S-Two-speed
[4] all 132 excl [3]

[A] Not acc to IEC.
[B] For IM B5 and IM B35: Shoulder of shaft extension and contact surface of flange are in the same plane.
[C] Knockout openings.
[D] Dimensions to UB1.
[E] Dimensions to UB2 (VD1 = right side, VD2 = left side) as viewed from the D-end.
[F] For variant code 053 increased by 7.5mm
[G] For variant code 053 increased by 5.5mm

Above table gives the main dimensions in mm. For detailed drawings please see our web-pages 'www.abb.com/motors&drives' or contact us.

Foot- and flange-mounted motor; IM B 35 (IM 2001), IM 2002, large flange

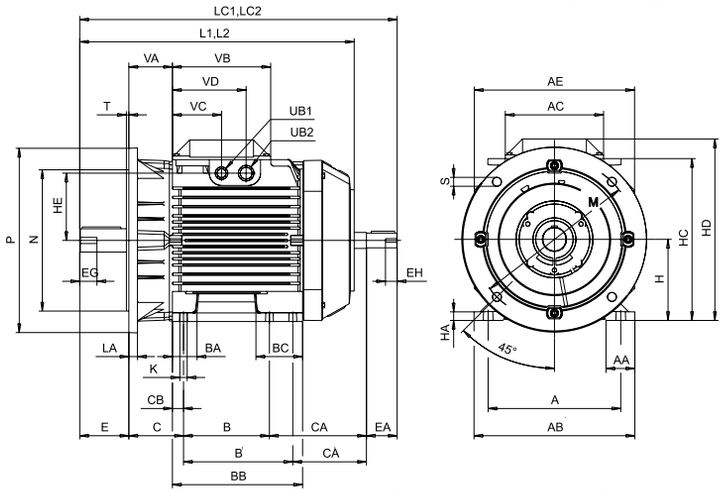

Foot- and flange-mounted motor; IM B 34 (IM 2101), IM 2102, small flange

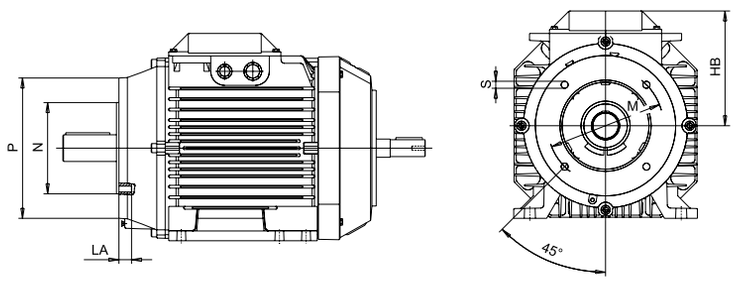

IM B 35 (IM 2001), IM 2002

Motor size	A	AA	AB	AC	AE	B	B'	BA	BB	BC	C	CA	CA'	CB	D	DA	DB	DC	E[B)]	EA	EG	EH	F	FA
112[1)]	190	41	222	221	160	140	-	31	168	31	70	115.5	-	14	28	19	M10	M8	60	40	22	19	8	6
112[2)]	190	41	222	221	160	140	-	31	168	31	70	138	-	14	28	19	M10	M8	60	40	22	19	8	6
132[3)]	216	47	262	261	160	140	178[A)]	40	212	76	89	158	120	18	38	24	M12	M8	80	50	28	19	10	8
132[4)]	216	47	262	261	160	140[A)]	178	40	212	76	89	191	153	18	38	24	M12	M8	80	50	28	19	10	8

Motor size	G	GA	GB	GC	H	HA	HC	HD	HE	K	L	L1	L2	LC	LC1	LC2	UB1[C)]	UB2[C)]	VA	VB	VC[D)]	VD1	VD2
112[1)]	24	31	15.5	21.5	112	12	226	258	92	12	361[F)]	361[F)]	361[F)]	421.5	421.5	421.5	M20	M25	60	160	80	120	40
112[2)]	24	31	15.5	21.5	112	12	226	258	92	12	388[F)]	388[F)]	388[F)]	448	448	448	M20	M25	60	160	80	120	40
132[3)]	33	41	20	27	132	14	263.5	295.5	109.5	12	447[G)]	447[G)]	447[G)]	517	517	517	M20	M25	71	160	80	120	40
132[4)]	33	41	20	27	132	14	263.5	295.5	109.5	12	481.5[G)]	481.5[G)]	481.5[G)]	550	550	550	M20	M25	71	160	80	120	40

IM B 35 (IM 2001)

Motor size	HB	LA	M	N	P	S	T
112[1)]	146	11	215	180	250	14.5	4
112[2)]	146	11	215	180	250	14.5	4
132[3)]	163.5	14	265	230	300	14.5	4
132[4)]	163.5	14	265	230	300	14.5	4

IM B 34 (IM 2101)

Motor size	HB	LA	M	N	P	S	T
112[1)]	146	20	130	110	160	M8	3.5
112[2)]	146	20	130	110	160	M8	3.5
132[3)]	163.5	18	165	130	200	M10	3.5
132[4)]	163.5	18	165	130	200	M10	3.5

Tolerances

A, B	ISO js14
C, CA	+2 -2
D28	ISO j6
D38	ISO k6
DA	ISO j6
F, FA	ISO h9
H	+0 -0.5
N	ISO j6

1) M2AA: M-2, M-4. M3AA: M-6, M8
2) all 112 excl 1)
3) M2AA: SA-2, SB-2, S-4, M-4. M3AA: SA-2, S-4, S-6, MA-6, MB-6, S-8, M-8, S-Two-speed
4) all 132 excl 3)

A) not acc to IEC.
B) For IM B5 and IM B35: Shoulder of shaft extension and contact surface of flange are in the same plane.
C) Knockout openings.
D) Dimensions to UB1.
E) Dimensions to UB2 (VD1 = right side, VD2 = left side) as viewed from the D-end.
F) For variant code 053 increased by 7.5mm
G) For variant code 053 increased by 5.5mm

Above table gives the main dimensions in mm. For detailed drawings please see our web-pages 'www.abb.com/motors&drives' or contact us.

General purpose aluminum motors M2AA 160-200

Dimension drawings

Foot-mounted motor; IM B3 (IM 1001), IM 1002

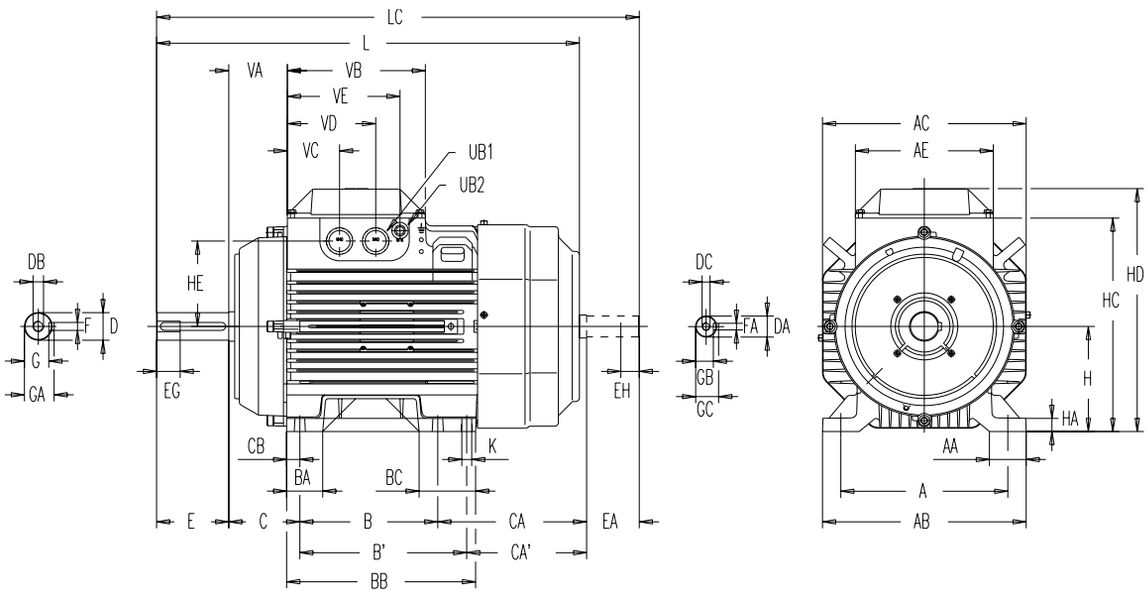

IM B3 (IM 1001), IM 1002

Motor size	A	AA	AB	AC	AE	B[8]	B'[8]	BA	BB	BC	C	CA	CA'	CB	D	DA	DB	DC	E	EA	EG	EH	F
160 [3]	254	56	310	310	210	210	254	55	287.5	86	108	185.5	141.5	20	42	32	M16	M12	110	80	36	28	12
180 [4]	279	65.5	340	310	210	241	279	58	316	88	121	185.5	141.5	25	48	32	M16	M12	110	80	36	28	14
180 [5]	279	65.5	340	310	210	241	279	58	316	88	121	226.5	182.5	25	48	32	M16	M12	110	80	36	28	14
200 [6]	318	64	380	360	210	267	305	98	365	98	133	218	180	30	55	32	M20	M12	110	80	42	28	16
200 [7]	318	64	380	360	210	267	305	98	365	98	133	238	200	30	55	32	M20	M12	110	80	42	28	16

Motor size	FA	G	GA	GB	GC	H	HA	HC	HD	HE	K	L	LC	UB1[2]	UB2[2]	VA	VB	VC	VD	VE
160 [3]	10	37	45	27	35	160	20	325	370	130	15	602.5	693.5	2*M40	M16	89	210	84.5	134.5	167.5
180 [4]	10	42.5	51.5	27	35	180	20	345	390	130	15	602.5	693.5	2*M40	M16	89	210	84.5	134.5	167.5
180 [5]	10	42.5	51.5	27	35	180	20	345	390	130	15	643.5	734.5	2*M40	M16	89	210	84.5	134.5	167.5
200 [6]	10	49	59	27	35	200	25	380	425	145	18	711.5	801.5	2*M40	M16	109	210	84.5	134.5	167.5
200 [7]	10	49	59	27	35	200	25	380	425	145	18	732	821.5	2*M40	M16	109	210	84.5	134.5	167.5

Tolerances

A, B	ISO js14
C, CA	0 +2
DA 32	ISO k6
D 45-48	ISO k6
D 55	ISO m6
F, FA	ISO h9
H	+0 -0.5

[2] Knockout openings.
[3] MA-2, M-2, L-2, M-4, L-4
[4] M-2, M-4
[5] L-4
[6] LA-4
[7] L-2, L-4
[8] 160 M, 180 M: B' not acc. to IEC
160 L, 180 L, 200 LA: B not acc. to IEC

Above table gives the main dimensions in mm.
For detailed drawings please see our web-pages 'www.abb.com/motors&drives' or contact us.

Flange-mounted motor; IM B5 (IM 3001), IM 3002

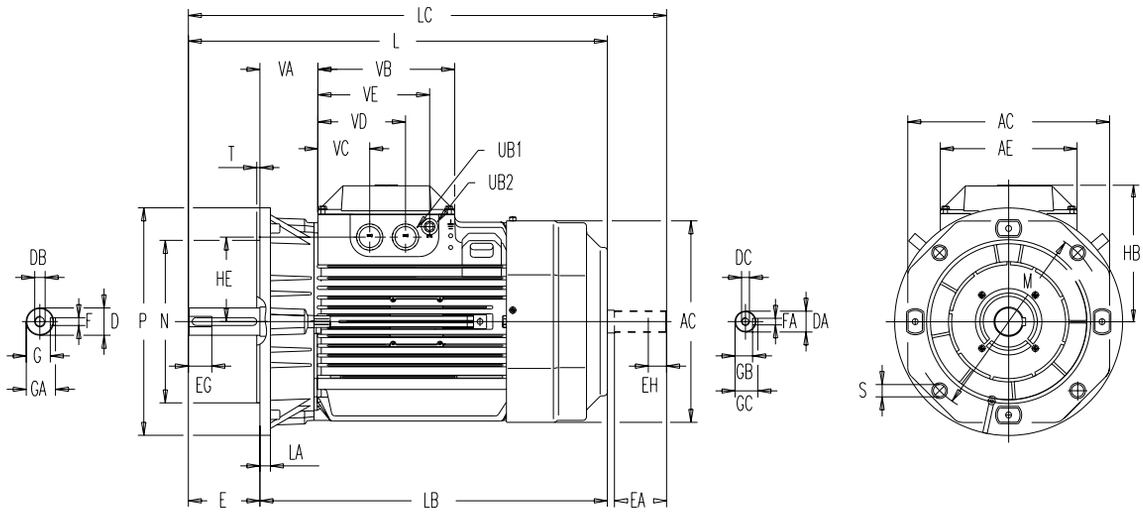

IM B5 (IM 3001), IM 3002

Motor size	AC	AE	D	DA	DB	DC	E[8]	EA	EG	EH	F	FA	G	GA	GB	GC	HB	HE
160 [3]	310	210	42	32	M16	M12	110	80	36	28	12	10	37	45	27	35	210	130
180 [4]	310	210	48	32	M16	M12	110	80	36	28	14	10	42.5	51.5	27	35	210	130
180 [5]	310	210	48	32	M16	M12	110	80	36	28	14	10	42.5	51.5	27	35	210	130
200 [6]	360	210	55	32	M20	M12	110	80	42	28	16	10	49	59	27	35	210	145
200 [7]	360	210	55	32	M20	M12	110	80	42	28	16	10	49	59	27	35	210	145

Motor size	L	LA	LB	LC	M	N	P	S	T	UB1[2]	UB2[2]	VA	VB	VC	VD	VE
160 [3]	602.5	16	492.5	693.5	300	250	350	19	5	2*M40	M16	89	210	79.5	134.5	171.5
180 [4]	602.5	16	492.5	693.5	300	250	350	19	5	2*M40	M16	89	210	79.5	134.5	171.5
180 [5]	643.5	16	533.5	734.5	300	250	350	19	5	2*M40	M16	89	210	79.5	134.5	171.5
200 [6]	711.5	20	601.5	801.5	350	300	400	19	5	2*M40	M16	109	210	79.5	134.5	171.5
200 [7]	732	20	622	821.5	350	300	400	19	5	2*M40	M16	109	210	79.5	134.5	171.5

Tolerances

DA 32	ISO k6
D 45-48	ISO k6
D 55	ISO m6
F, FA	ISO h9
N	ISO j6

[2] Knockout openings.
[3] MA-2, M-2, L-2, M-4, L-4
[4] M-2, M-4
[5] L-4
[6] LA-2
[7] L-2, L-4
[8] Shoulder of shaft extension and contact surface of flange are in the same plane.

Above table gives the main dimensions in mm.
For detailed drawings please see our web-pages 'www.abb.com/motors&drives' or contact us.

General purpose aluminum motors M2AA 160-200

Dimension drawings

Foot- and flange-mounted motor; IM B35 (IM 2001), IM 2002

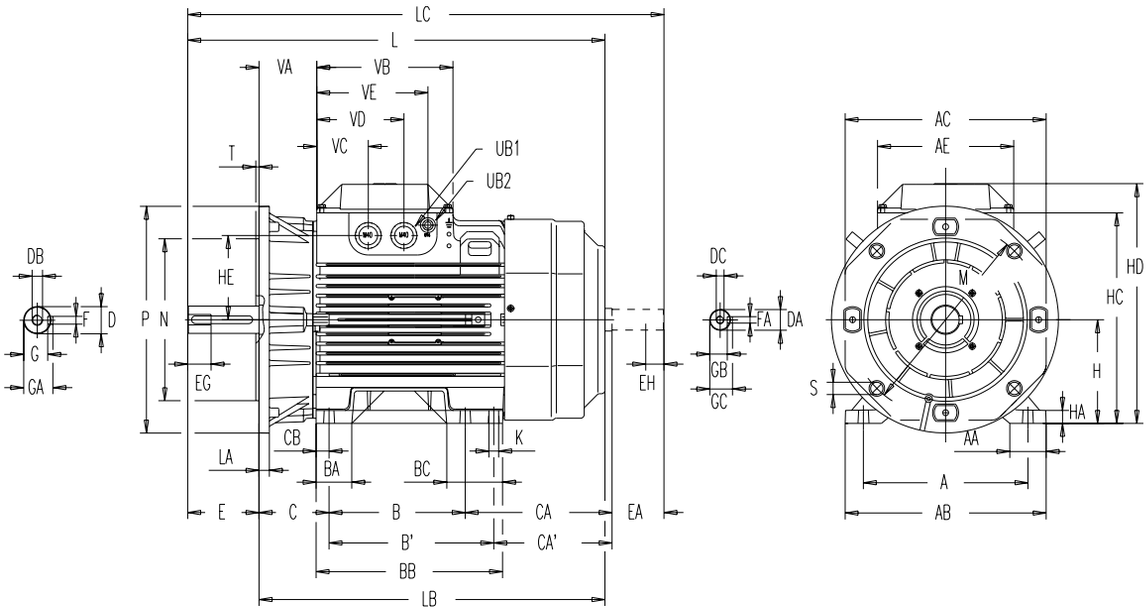

IM B35 (IM 2001), IM 2002

Motor size	A	AA	AB	AC	AE	B[9]	B'[9]	BA	BB	BC	C	CA	CA'	CB	D	DA	DB	DC
160 [3]	254	56	310	310	210	210	254	55	287.5	86	108	185.5	141.5	20	42	32	M16	M12
180 [4]	279	65.5	340	310	210	241	279	58	316	88	121	185.5	141.5	25	48	32	M16	M12
180 [5]	279	65.5	340	310	210	241	279	58	316	88	121	226.5	182.5	25	48	32	M16	M12
200 [6]	318	64	380	360	210	267	305	98	365	98	133	218	180	30	55	32	M20	M12
200 [7]	318	64	380	360	210	267	305	98	365	98	133	238	200	30	55	32	M20	M12

Motor size	E[8]	EA	EG	EH	F	FA	G	GA	GB	GC	H	HA	HB	HC	HD	HE	K	L
160 [3]	110	80	36	28	12	10	37	45	27	35	160	20	325	370	130	15	602.5	
180 [4]	110	80	36	28	14	10	42.5	51.5	27	35	180	20	345	390	130	15	602.5	
180 [5]	110	80	36	28	14	10	42.5	51.5	27	35	180	20	345	390	130	15	643.5	
200 [6]	110	80	42	28	16	10	49	59	27	35	200	25	380	425	145	18	711.5	
200 [7]	110	80	42	28	16	10	49	59	27	35	200	25	380	425	145	18	732	

Motor size	LA	LB	LC	M	N	P	S	T	UB1[2]	UB2[2]	VA	VB	VC	VD	VE
160 [3]	16	492.5	693.5	300	250	350	19	5	2*M40	M16	89	210	79.5	134.5	171.5
180 [4]	20	492.5	693.5	300	250	350	19	5	2*M40	M16	89	210	79.5	134.5	171.5
180 [5]	20	533.5	734	300	250	350	19	5	2*M40	M16	89	210	79.5	134.5	171.5
200 [6]	20	601.5	801.5	350	300	400	19	5	2*M40	M16	109	210	79.5	134.5	171.5
200 [7]	20	622.0	821.5	350	300	400	19	5	2*M40	M16	109	210	79.5	134.5	171.5

Tolerances

A, B	ISO js14
C, CA	+0 -2
DA32	ISO k6
D45-48	ISO k6
D55	ISO m6
F, FA	ISO h9
H	+0 - 0.5
N	ISO j6

[2] Knockout openings.
[3] MA-2, M-2, L-2, M-4, L-4
[4] M-2, M-4
[5] L-4
[6] LA-2
[7] L-2, L-4
[8] Shoulder of shaft extension and contact surface of flange are in the same plane.
[9] 160 M, 180 M: B' not acc. to IEC.
160 L, 180 L, 200 LA: B not acc. to IEC.

Above table gives the main dimensions in mm.

For detailed drawings please see our web-pages 'www.abb.com/motors&drives' or contact us.

Foot-mounted motor; IM B3 (IM 1001), IM 1002

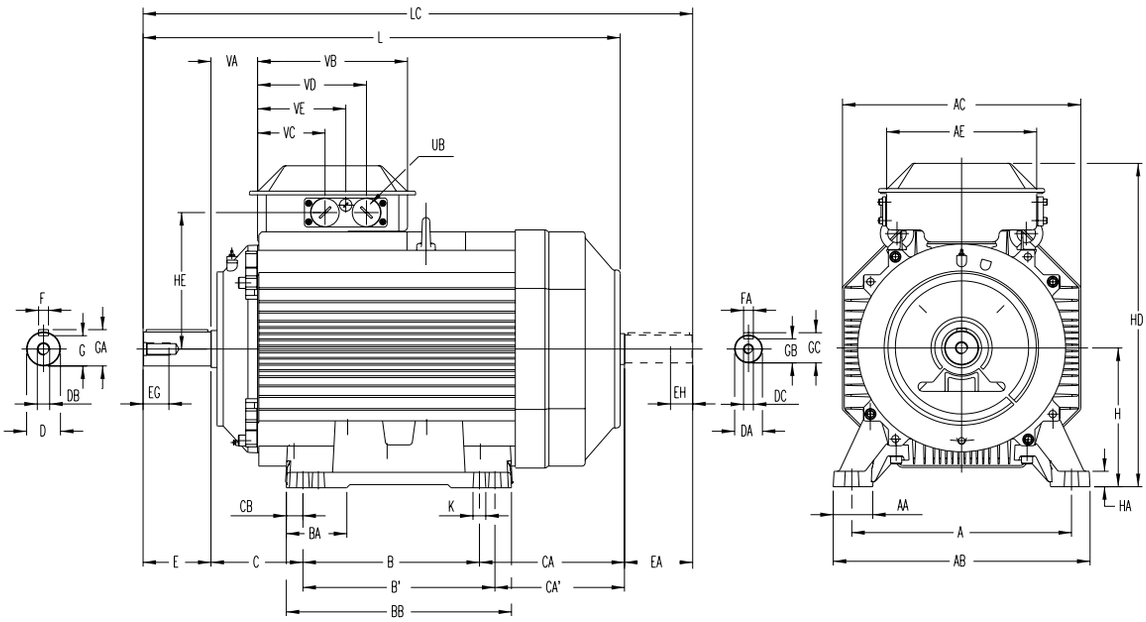

Dimension AD and HD refer to side mounted terminal box, see page 73.

IM B3 (IM 1001), IM 1002

Motor size	A	AA	AB	AC	AE	B[5]	B'	BA	BB	C	CA	CA'	CB	D	DA	DB	DC	E	EA	EG	EH
225 M-2	356	64	416	386	243	286[7]	311	81.5	365	149	238	213	27	55	45	M20	M16	110	110	42	36
225 S-4	356	64	416	386	243	286	311[8]	81.5	365	149	238	213	27	60	45	M20	M16	140	110	42	36
225 M-4	356	64	416	386	243	286[7]	311	81.5	365	149	278	253	27	60	45	M20	M16	140	110	42	36
250 M-2	406	76	472	425	243	311[7]	349	99.5	409	168	256	218	30	60	55	M20	M20	140	110	42	42
250 M-4	406	76	472	425	243	311[7]	349	99.5	409	168	256	218	30	65	55	M20	M20	140	110	42	42

Motor size	F	FA	G	GA	GB	GC	H	HA	HD	HE	K	L	LC	UB[2]	VA	VB	VC[3]	VC[4]	VD[3]	VD[4]
225 M-2	16	14	49	59	39.5	48.5	225	25	525.5	221	18	773	893	2xFL 13	75.5	243	109.5	81.5	176.5	171.5
225 S-4	18	14	53	64	39.5	48.5	225	25	525.5	221	18	803	923	2xFL 13	75.5	243	109.5	81.5	176.5	171.5
225 M-4	18	14	53	64	39.5	48.5	225	25	525.5	221	18	843	963	2xFL 13	75.5	243	109.5	81.5	176.5	171.5
250 M-2	18	16	53	64	49	59	250	40	571	241	22	866	985	2xFL 13	93.5	243	109.5	81.5	176.5	171.5
250 M-4	18	16	58	69	49	59	250	40	571	241	22	866	985	2xFL 13	93.5	243	109.5	81.5	176.5	171.5

Motor size	VE[3]	VE[4]
225 M-2	143	126.5
225 S-4	143	126.5
225 M-4	143	126.5
250 M-2	143	126.5
250 M-4	143	126.5

Tolerances	
A, B	ISO js14
C, CA	0 +2
DA 45	ISO k6
D, DA 55-65	ISO m6
F, FA	ISO h9
H	+0 - 0.5

2) Flange opening is provided with pipe flange FL 13, with tapped lead-in holes plugged with sealing plugs.
Single- and two-speed motors: 2 x M40 + M16.
Motors for 230 V 50 Hz have pipe flange FL 21 and 2 x M63 + M16.
3) For flange opening FL 13: 2 x M40 + M16.
4) For extra large terminal box with flange opening FL 21: 2 x M63 + M16.
5) Basic design only.
6) Dimension CB = 30 for high output design.
7) Not according to IEC for M.
8) Not according to IEC for S.

Above table gives the main dimensions in mm.
For detailed drawings please see our web-pages 'www.abb.com/motors&drives' or contact us.

General purpose aluminum motors M2AA 225-250

Dimension drawings

Flange-mounted motor; IM B5 (IM 3001), IM 3002

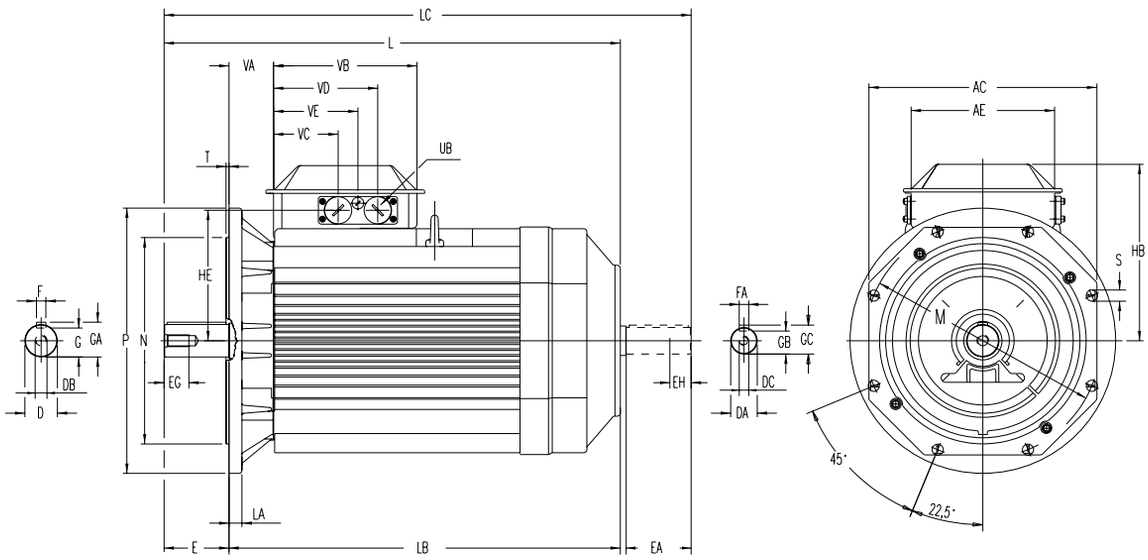

IM B5 (IM 3001), IM 3002

Motor size	AC	AE	D	DA	DB	DC	E[2]	EA	EG	EH	F	FA	G	GA	GB	GC	HB	HE
225 M-2	386	243	55	45	M20	M16	110	110	42	36	16	14	49	59	39.5	48.5	300.5	221
225 S-4	386	243	60	45	M20	M16	140	110	42	36	18	14	53	64	39.5	48.5	300.5	221
225 M-4	386	243	60	45	M20	M16	140	110	42	36	18	14	53	64	39.5	48.5	300.5	221
250 M-2	425	243	60	55	M20	M20	140	110	42	42	18	16	53	64	49	59	321	241
250 M-4	425	243	65	55	M20	M20	140	110	42	42	18	16	58	69	49	59	321	241

Motor size	L	LA	LB	LC	M	N	P	S	T	UB[3]	VA	VB	VC[4]	VC[5]	VD[4]	VD[5]	VE[4]	VE[5]
225 M-2	773	22	663	893	400	350	450	19	5	2 x FL 13	75.5	243	109.5	81.5	176.5	171.5	143	126.5
225 S-4	803	22	663	923	400	350	450	19	5	2 x FL 13	75.5	243	109.5	81.5	176.5	171.5	143	126.5
225 M-4	843	22	703	963	400	350	450	19	5	2 x FL 13	75.5	243	109.5	81.5	176.5	171.5	143	126.5
250 M-2	866	22	725	985	500	450	550	19	5	2 x FL 13	93.5	243	109.5	81.5	176.5	171.5	143	126.5
250 M-4	866	22	725	985	500	450	550	19	5	2 x FL 13	93.5	243	109.5	81.5	176.5	171.5	143	126.5

Tolerances

DA 45	ISO k6
D, DA 55-60	ISO m6
F, FA	ISO h9
N	ISO js6

2) Shoulder of shaft extension and contact surface of flange are in the same plane.
3) Flange opening is provided with pipe flange FL 13, with tapped lead-in holes plugged with sealing plugs. Single- and two-speed motors: 2 x M40 + M16. Motors for 230 V 50 Hz have pipe flange FL 21 and 2 x M63 + M16.
4) For flange opening FL 13: 2 x M40 + M16.
5) For extra large terminal box with flange opening FL 21: 2 x M63 + M16.

Above table gives the main dimensions in mm.
For detailed drawings please see our web-pages 'www.abb.com/motors&drives' or contact us.

Foot- and flange-mounted motor; IM B35 (IM 2001), IM 2002

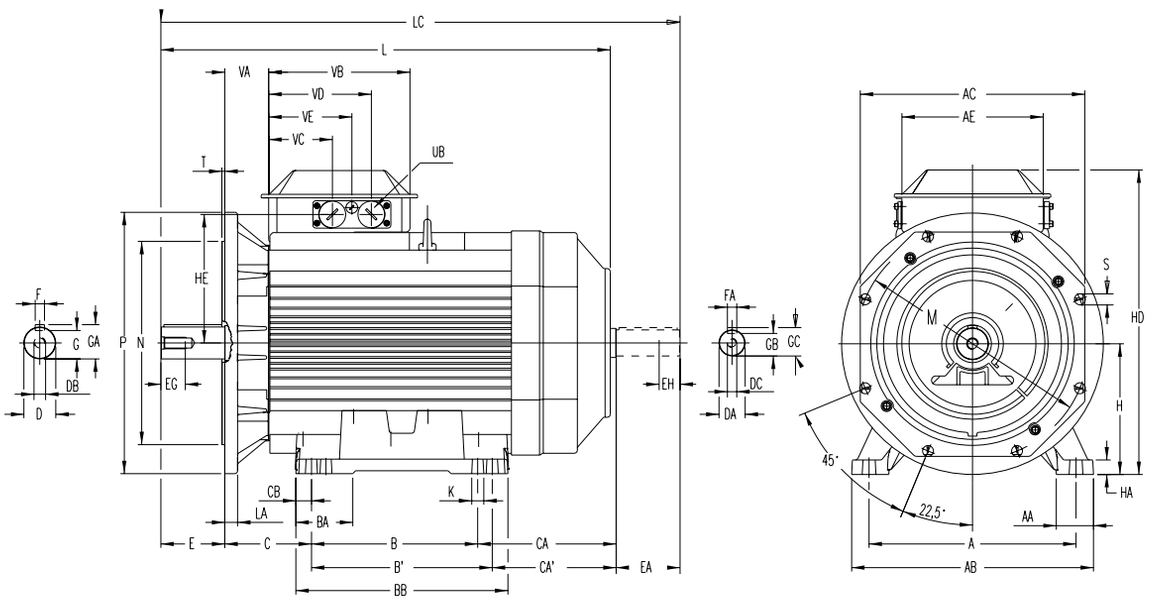

IM B35 (IM 2001), IM 2002

Motor size	A	AA	AB	AC	AE	B	B'	BA	BB	C	CA	CA'	CB	D	DA	DB	DC	E[5]	EA	EG	EH	F	FA	G	GA
225 M-2	356	64	416	386	243	286	311	81.5	365	149	238	213	27	55	45	M20	M16	110	110	42	36	16	14	49	59
225 S-4	356	64	416	386	243	286	311	81.5	365	149	238	213	27	60	45	M20	M16	140	110	42	36	18	14	53	64
225 M-4	356	64	416	386	243	286	311	81.5	365	149	278	253	27	60	45	M20	M16	140	110	42	36	18	14	53	64
250 M-2	406	76	472	425	243	311	349	99.5	409	168	256	218	30	60	55	M20	M20	140	110	42	42	18	16	53	64
250 M-4	406	76	472	425	243	311	349	99.5	409	168	256	218	30	65	55	M20	M20	140	110	42	42	18	16	58	69

Motor size	GB	GC	H	HA	HD	HE	K	L	LA	LB	LC	M	N[1]	P	S	T	UB[2]	VA	VB	VC[3]	VC[4]	VD[3]	VD[4]
225 M-2	39.5	48.5	225	25	525.5	221	18	773	22	663	893	400	350	450	19	5	2 x FL 13	75.5	243	109.5	81.5	176.5	171.5
225 S-4	39.5	48.5	225	25	525.5	221	18	803	22	663	923	400	350	450	19	5	2 x FL 13	75.5	243	109.5	81.5	176.5	171.5
225 M-4	39.5	48.5	225	25	525.5	221	18	843	22	703	963	400	350	450	19	5	2 x FL 13	75.5	243	109.5	81.5	176.5	171.5
250 M-2	49	59	250	40	571	241	22	866	22	725	985	500	450	550	19	5	2 x FL 13	93.5	243	109.5	81.5	176.5	171.5
250 M-4	49	59	250	40	571	241	22	866	22	725	985	500	450	550	19	5	2 x FL 13	93.5	243	109.5	81.5	176.5	171.5

Motor size	VE[3]	VE[4]
225 M-2	143	126.5
225 S-4	143	126.5
225 M-4	143	126.5
250 M-2	143	126.5
250 M-4	143	126.5

Tolerances	
A, B	ISO js14
C, CA	0 +2
D 44	ISO k6
D, DA 55-65	ISO m6
F, FA	ISO h9
H	+0 -0.5

2) Flange opening is provided with pipe flange FL 13, with tapped lead-in holes plugged with sealing plugs, 2 x M40 + M16.
3) For flange opening FL 13: 2 x M40 + M16.
4) For extra large terminal box with flange opening FL 21: 2 x M63 + M16.
5) Shoulder of shaft extension and contact surface of flange are in the same plane.

Above table gives the main dimensions in mm.

For detailed drawings please see our web-pages 'www.abb.com/motors&drives' or contact us.

General purpose aluminum motors M3AA 160-180

Dimension drawings

Foot-mounted motor; IM B3 (IM 1001), IM 1002

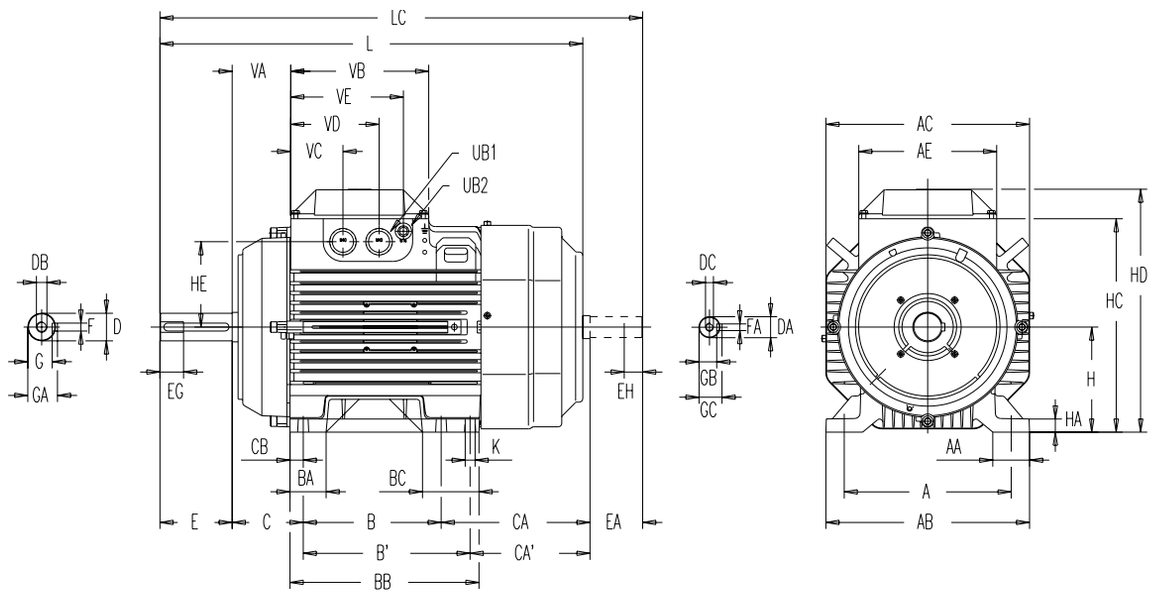

IM B3 (IM 1001), IM 1002

Motor size	A	AA	AB	AC	AE	B[7]	B'[7]	BA	BB	BC	C	CA	CA'	CB	D	DA	DB	DC	E	EA	EG	EH	F
160 [3]	254	56	310	310	210	210	254	55	287.5	86	108	185.5	141.5	20	42	32	M16	M12	110	80	36	28	12
160 [4]	254	56	310	310	210	210	254	55	287.5	86	108	226.5	182.5	20	42	32	M16	M12	110	80	36	28	12
180 [5]	279	65.5	340	360	210	241	279	58	316	88	121	218	180	25	48	32	M16	M12	110	80	36	28	14
180 [6]	279	65.5	340	360	210	241	279	58	316	88	121	238	200	25	48	32	M16	M12	110	80	36	28	14

Motor size	FA	G	GA	GB	GC	H	HA	HC	HD	HE	K	L	LC	UB1[2]	UB2[2]	VA	VB	VC	VD	VE
160 [3]	10	37	45	27	35	160	20	325	370	130	15	602.5	693.5	2*M40	M16	89	210	84.5	134.5	167.5
160 [4]	10	37	45	27	35	160	20	325	370	130	15	643.5	734.5	2*M40	M16	89	210	84.5	134.5	167.5
180 [5]	10	42.5	51.5	27	35	180	20	360	405	145	15	680	770	2*M40	M16	77.5	210	84.5	134.5	167.5
180 [6]	10	42.5	51.5	27	35	180	20	360	405	145	15	700.5	790	2*M40	M16	77.5	210	84.5	134.5	167.5

Tolerances

A, B	ISO js14
C, CA	+2 -2
D, DA	ISO k6
F, FA	ISO h9
H	+0 -0.5

[2] Knockout openings.
[3] M-2, MA-2, M-4, M-6, M-8, MA-8, L-2, L-4, L-6, MA-2/4, M-2/4, L-2/4, M-4/6, M-4/8, LB-2, LB-4
[4] L-8, L-4/6, L-4/8, LB-6, LB-8
[5] M-2, M-4, L-6, L-8, M-2/4, M-4/6, M-4/8, LB-2
[6] L-4, L-2/4, L-4/6, L-4/8, LB-4, LB-6, LB-8
[7] 160 M, 180 M: B' not acc. to IEC
160 L, 180 L: B not acc. to IEC

Above table gives the main dimensions in mm.
For detailed drawings please see our web-pages 'www.abb.com/motors&drives' or contact us.

M3AA 160-180

Flange-mounted motor; IM B5 (IM 3001), IM 3002

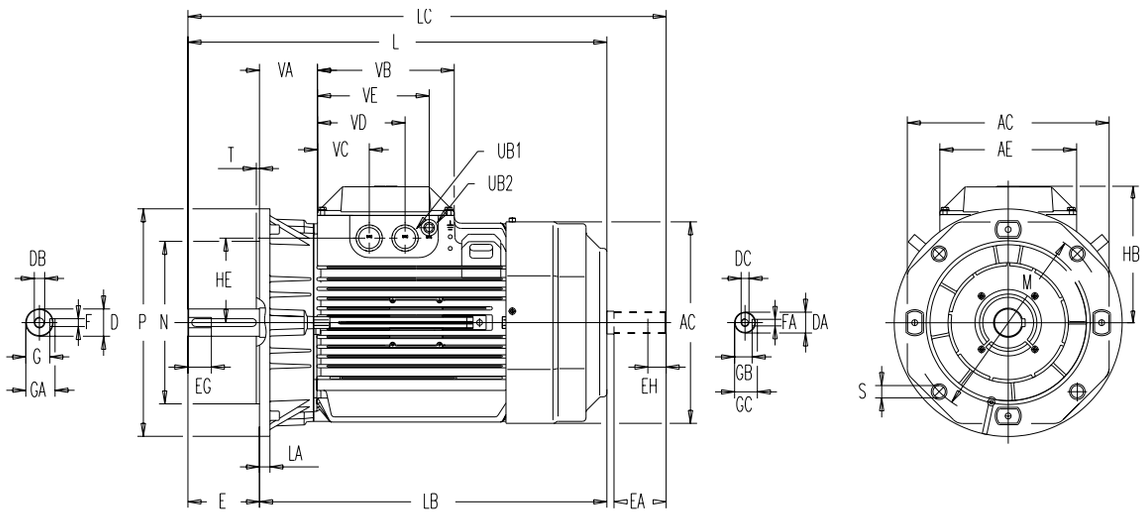

IM B5 (IM 3001), IM 3002

Motor size	AC	AE	D	DA	DB	DC	E[7]	EA	EG	EH	F	FA	G	GA	GB	GC	HB	HE
160 [3]	310	210	42	32	M16	M12	110	80	36	28	12	10	37	45	27	35	210	130
160 [4]	310	210	42	32	M16	M12	110	80	36	28	12	10	37	45	27	35	210	130
180 [5]	360	210	48	32	M16	M12	110	80	36	28	14	10	42.5	51.5	27	35	225	145
180 [6]	360	210	48	32	M16	M12	110	80	36	28	14	10	42.5	51.5	27	35	225	145

Motor size	L	LA	LB	LC	M	N	P	S	T	UB1[2]	UB2[2]	VA	VB	VC	VD	VE
160 [3]	602.5	16	492.5	693.5	300	250	350	19	5	2*M40	M16	89	210	79.5	134.5	171.5
160 [4]	643.5	16	533.5	734.5	300	250	350	19	5	2*M40	M16	89	210	79.5	134.5	171.5
180 [5]	680	21	570	770	300	250	350	19	5	2*M40	M16	77.5	210	79.5	134.5	171.5
180 [6]	700.5	21	590.5	790	300	250	350	19	5	2*M40	M16	77.5	210	79.5	134.5	171.5

Tolerances
D, DA ISO k6
F, FA ISO h9
N ISO j6

[2] Knockout openings.
[3] M-2, MA-2, M-4, M-6, M-8, MA-8, L-2, L-4, L-6, MA-2/4, M-2/4, L-2/4, M-4/6, M-4/8, LB-2, LB-4
[4] L-8, L-4/6, L-4/8, LB-6, LB-8
[5] M-2, M-4, L-6, L-8, M-2/4, M-4/6, M-4/8, LB-2
[6] L-4, L-2/4, L-4/6, L-4/8, LB-4, LB-6, LB-8
[7] Shoulder of shaft extension and contact surface of flange are in the same plane.

Above table gives the main dimensions in mm.
For detailed drawings please see our web-pages 'www.abb.com/motors&drives' or contact us.

General purpose aluminum motors M3AA 160-180

Dimension drawings

Foot- and flange-mounted motor; IM B35 (IM 2001), IM 2002

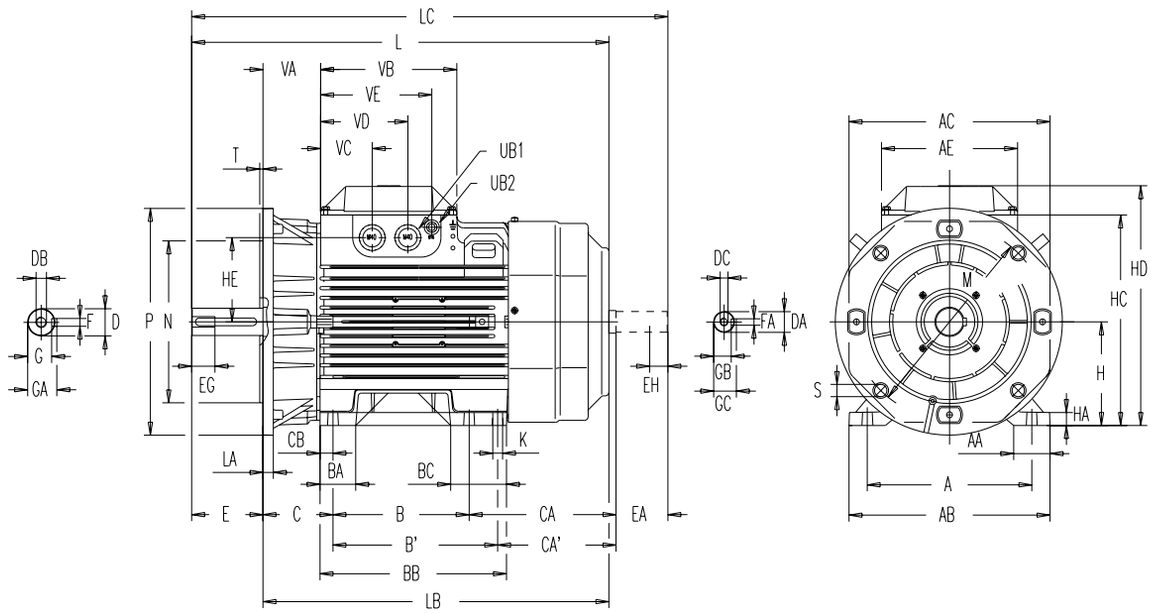

IM B35 (IM 2001), IM 2002

Motor size	A	AA	AB	AC	AE	B[8]	B'[8]	BA	BB	BC	C	CA	CA'	CB	D	DA	DB	DC
160 [3]	254	56	310	310	210	210	254	55	287.5	86	108	185.5	141.5	20	42	32	M16	M12
160 [4]	254	56	310	310	210	210	254	55	287.5	86	108	226.5	182.5	20	42	32	M16	M12
180 [5]	279	65.5	340	360	210	241	279	58	316	88	121	218	180	25	48	32	M16	M12
180 [6]	279	65.5	340	360	210	241	279	58	316	88	121	238	200	25	48	32	M16	M12

Motor size	E[7]	EA	EG	EH	F	FA	G	GA	GB	GC	H	HA	HB	HC	HD	HE	K	L
160 [3]	110	80	36	28	12	10	37	45	27	35	160	20	210	325	370	130	15	602.5
160 [4]	110	80	36	28	12	10	37	45	27	35	160	20	210	325	370	130	15	643.5
180 [5]	110	80	36	28	14	10	42.5	51.5	27	35	180	20	225	360	405	145	15	680
180 [6]	110	80	36	28	14	10	42.5	51.5	27	35	180	20	225	360	405	145	15	700.5

Motor size	LA	LB	LC	M	N	P	S	T	UB1[2]	UB2[2]	VA	VB	VC	VD	VE
160 [3]	16	492.5	693.5	300	250	350	19	5	2*M40	M16	89	210	79.5	134.5	171.5
160 [4]	16	533.5	734.5	300	250	350	19	5	2*M40	M16	89	210	79.5	134.5	171.5
180 [5]	21	570	770	300	250	350	19	5	2*M40	M16	77.5	210	79.5	134.5	171.5
180 [6]	21	590.5	790	300	250	350	19	5	2*M40	M16	77.5	210	79.5	134.5	171.5

Tolerances

A, B	ISO js14
C, CA	+0 -2
D, DA	ISO k6
F, FA	ISO h9
H	+0 - 0.5
N	ISO j6

[2] Knockout openings.
[3] M-2, MA-2, M-4, M-6, M-8, MA-8, L-2, L-4, L-6, MA-2/4, M-2/4, L-2/4, M-4/6, M-4/8, LB-2, LB-4.
[4] L-8, L-4/6, L-4/8, LB-6, LB-8.
[5] M-2, M-4, L-6, L-8, M-2/4, M-4/6, M-4/8, LB-2.
[6] L-4, L-2/4, L-4/6, L-4/8, LB-4, LB-6, LB-8.
[7] Shoulder of shaft extension and contact surface of flange are in the same plan.
[8] 160 M, 180 M: B' not acc. to IEC.
160 L, 180 L: B not acc. to IEC.

Above table gives the main dimensions in mm.
For detailed drawings please see our web-pages 'www.abb.com/motors&drives' or contact us.

Foot-mounted motor; IM B3 (IM 1001), IM 1002

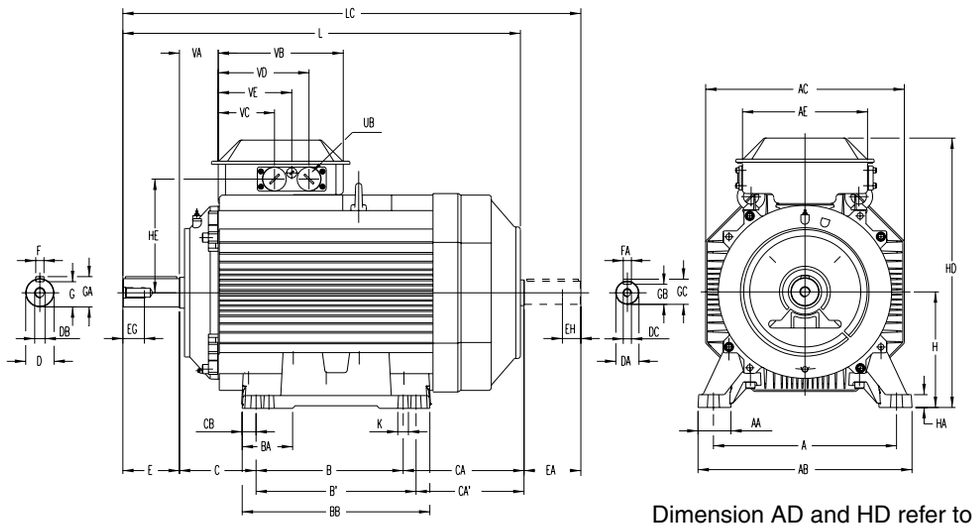

Dimension AD and HD refer to side mounted terminal box, see page 73.

IM B3 (IM 1001), IM 1002

Motor size	A	AA	AB	AC	AE	B	B'	BA	BB	C	CA	CA'	CB	D	DA	DB	DC	E[D]	EA	EG	EH	F	FA
200[1]	318	64	380	386	243	267	305	98	365	133	273	235	30	55	45	M20	M16	110	110	42	36	16	14
200[2]	318	64	380	386	243	267	305	98	365	133	313	275	30	55	45	M20	M16	110	110	42	36	16	14
225[3]	356	69	418	425	243	286	311	84	360	149	300	275	24.5	55	55	M20	M20	110	110	42	42	16	16
225[4]	356	69	418	425	243	286	311	84	360	149	325	300	24.5	55	55	M20	M20	110	110	42	42	16	16
225[5]	356	69	418	425	243	286	311	84	360	149	300	275	24.5	60	55	M20	M20	140	110	42	42	18	16
225[6]	356	69	418	425	243	286	311	84	360	149	325	300	24.5	60	55	M20	M20	140	110	42	42	18	16

Motor size	G	GA	GB	GC	H	HA	HD[B]	HD[C]	HE	K	L	LC	UB[A]	VA	VB	VC[B]	VC[C]	VD[B]	VD[C]	VE[B]	VE[C]
200[1]	49	59	39.5	48.5	200	25	500.5	533	224	18	774	893	2xFL13	75.5	243	109.5	81.5	176.5	171.5	143	126.5
200[2]	49	59	39.5	48.5	200	25	500.5	533	224	18	814	933	2xFL13	75.5	243	109.5	81.5	176.5	171.5	143	126.5
225[3]	49	59	49	59	225	25	546	578	244.5	18	836	955	2xFL13	93.5	243	109.5	81.5	176.5	171.5	143	126.5
225[4]	49	59	49	59	225	25	546	578	244.5	18	861	980	2xFL13	93.5	243	109.5	81.5	176.5	171.5	143	126.5
225[5]	53	64	49	59	225	25	546	578	244.5	18	866	985	2xFL13	93.5	243	109.5	81.5	176.5	171.5	143	126.5
225[6]	53	64	49	59	225	25	546	578	244.5	18	891	1100	2xFL13	93.5	243	109.5	81.5	176.5	171.5	143	126.5

Tolerances

A,B	ISO js14
C, CA	+0 -2
D 55-65	ISO m6
DA 45-55	ISO k6
F, FA	ISO h9
H	+0 -0.5
N	ISO j6

1) all 200 excl 2)
2) MLD-2, MLC-4
3) SMB-2, SMC-2, SM_-2/4
4) SMD-2,
5) all 225 excl 3) 4) 6)
6) SMD-4

A) Flange opening is provided with pipe flange FL 13, with tapped lead-in holes plugged with sealing plugs 2 x M40 + M16. Motors for 230VD 50Hz have pipe flange FL21 and 2 x M63 + M16
B) For flange opening FL13: 2 x M40 + M16
C) For extra large flange opening FL21: 2 x M63 + M16
D) For IM B5 and IM B35: Shoulder of shaft extension and contact surface of flange are in the same plane.

Above table gives the main dimensions in mm.

For detailed drawings please see our web-pages 'www.abb.com/motors&drives' or contact us.

General purpose aluminum motors M3AA 200-225

Dimension drawings

Flange-mounted motor; IM B5 (IM 3001), IM 3002

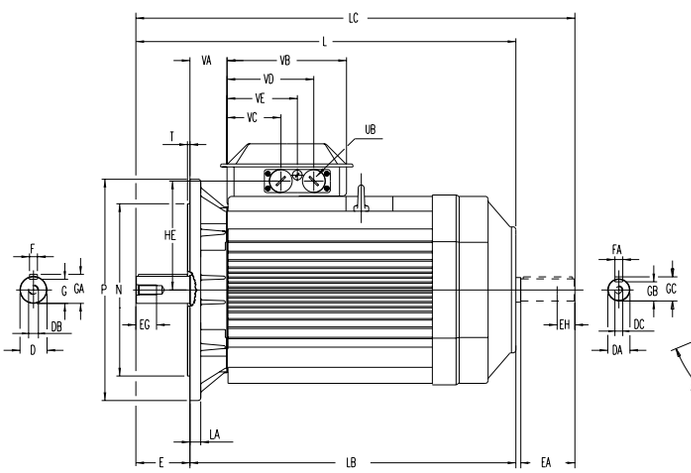

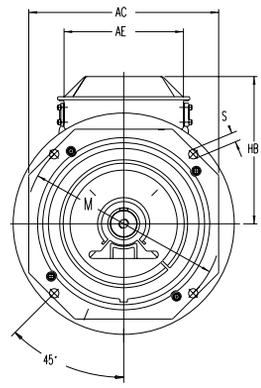

M3AA 200

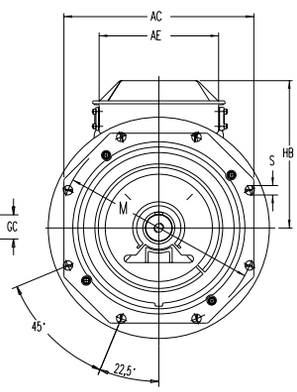

M3AA 225

IM B5 (IM 3001), IM 3002

Motor size	AC	AE	D	DA	DB	DC	E[D)]	EA	EG	EH	F	FA	G	GA	GB	GC	HB[B)]	HB[C)]	HE
200[1)]	386	243	55	45	M20	M16	110	110	42	36	16	14	49	59	39.5	48.5	301	333	224
200[2)]	386	243	55	45	M20	M16	110	110	42	36	16	14	49	59	39.5	48.5	301	333	224
225[3)]	425	243	55	55	M20	M20	110	110	42	42	16	16	49	59	49	59	321	353	244.5
225[4)]	425	243	55	55	M20	M20	110	110	42	42	16	16	49	59	49	59	321	353	244.5
225[5)]	425	243	60	55	M20	M20	140	110	42	42	16	16	53	64	49	59	321	353	244.5
225[6)]	425	243	60	55	M20	M20	140	110	42	42	16	16	53	64	49	59	321	353	244.5

Motor size	L	LA	LB	LC	M	N	P	S	T	UB[A)]	VA	VB	VC[B)]	VC[C)]	VD[B)]	VD[C)]	VE[B)]	VE[C)]
200[1)]	774	20	664	893	350	300	400	19	5	2xFL13	75.5	243	109.5	81.5	176.5	171.5	143	126.5
200[2)]	814	20	704	933	350	300	400	19	5	2xFL13	75.5	243	109.5	81.5	176.5	171.5	143	126.5
225[3)]	836	22	726	955	400	350	450	19	5	2xFL13	93.5	243	109.5	81.5	176.5	171.5	143	126.5
225[4)]	861	22	751	980	400	350	450	19	5	2xFL13	93.5	243	109.5	81.5	176.5	171.5	143	126.5
225[5)]	866	22	726	985	400	350	450	19	5	2xFL13	93.5	243	109.5	81.5	176.5	171.5	143	126.5
225[6)]	891	22	751	1100	400	350	450	19	5	2xFL13	93.5	243	109.5	81.5	176.5	171.5	143	126.5

Tolerances

A,B	ISO js14
C, CA	+0 -2
D 55-65	ISO m6
DA 45-55	ISO k6
F, FA	ISO h9
H	+0 -0.5
N	ISO j6

1) all 200 excl 2)
2) MLD-2, MLC-4
3) SMB-2, SMC-2, SM_-2/4
4) SMD-2,
5) all 225 excl 3) 4) 6)
6) SMD-4

A) Flange opening is provided with pipe flange FL 13, with tapped lead-in holes plugged with sealing plugs 2 x M40 + M16. Motors for 230VD 50Hz have pipe flange FL21 and 2 x M63 + M16
B) For flange opening FL13: 2 x M40 + M16
C) For extra large flange opening FL21: 2 x M63 + M16
D) For IM B5 and IM B35: Shoulder of shaft extension and contact surface of flange are in the same plane.

Above table gives the main dimensions in mm.

For detailed drawings please see our web-pages 'www.abb.com/motors&drives' or contact us.

General purpose aluminum motors

Dimension drawings

M3AA 200-225

Foot- and flange-mounted motor; IM B35 (IM 2001), IM 2002

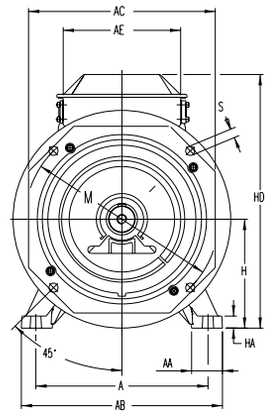

M3AA 200

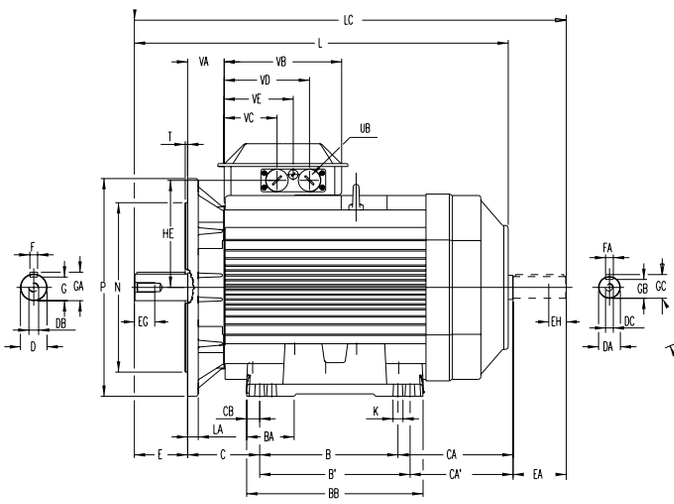

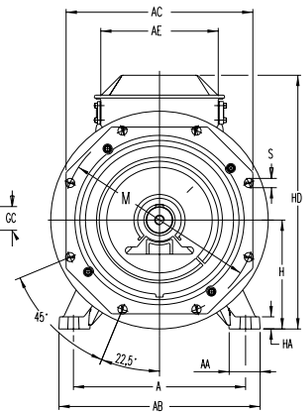

M3AA 225

IM B35 (IM 2001), IM 2002

Motor size	A	AA	AB	AC	AE	B	B'	BA	BB	C	CA	CA'	CB	D	DA	DB	DC	E[D]	EA	EG	EH	F	FA	G	GA	GB	GC
200[1]	318	64	380	386	243	267	305	98	365	133	273	235	30	55	45	M20	M16	110	110	42	36	16	14	49	59	39.5	48.5
200[2]	318	64	380	386	243	267	305	98	365	133	313	275	30	55	45	M20	M16	110	110	42	36	16	14	49	59	39.5	48.5
225[3]	356	69	418	425	243	286	311	84	360	149	300	275	25	55	55	M20	M20	110	110	42	42	16	16	49	59	49	59
225[4]	356	69	418	425	243	286	311	84	360	149	325	300	25	55	55	M20	M20	110	110	42	42	16	16	49	59	49	59
225[5]	356	69	418	425	243	286	311	84	360	149	300	275	25	60	55	M20	M20	140	110	42	42	18	16	53	64	49	59
225[6]	356	69	418	425	243	286	311	84	360	149	325	300	25	60	55	M20	M20	140	110	42	42	18	16	53	64	49	59

Motor size	H	HA	HB[B]	HB[C]	HD[B]	HD[C]	HE	K	L	LA	LB	LC	M	N	P	S	T	UB[A]	VA	VB	VC[B]	VC[C]	VD[B]	VD[C]	VE[B]	VE[C]
200[1]	200	25	301	333	501	533	224	18	774	20	664	893	350	300	400	19	5	2xFL13	75.5	243	110	81.5	176.5	171.5	143	126.5
200[2]	200	25	301	333	501	533	224	18	814	20	704	933	350	300	400	19	5	2xFL13	75.5	243	110	81.5	176.5	171.5	143	126.5
225[3]	225	25	321	353	546	578	245	18	836	22	726	955	400	350	450	19	5	2xFL13	93.5	243	110	81.5	176.5	171.5	143	126.5
225[4]	225	25	321	353	546	578	245	18	861	22	751	980	400	350	450	19	5	2xFL13	93.5	243	110	81.5	176.5	171.5	143	126.5
225[5]	225	25	321	353	546	578	245	18	866	22	726	985	400	350	450	19	5	2xFL13	93.5	243	110	81.5	176.5	171.5	143	126.5
225[6]	225	25	321	353	546	578	245	18	891	22	751	1100	400	350	450	19	5	2xFL13	93.5	243	110	81.5	176.5	171.5	143	126.5

Tolerances

A,B	ISO js14
C, CA	+0 -2
D 55-65	ISO m6
DA 45-55	ISO k6
F, FA	ISO h9
H	+0 -0.5
N	ISO j6

1) all 200 excl 2)
2) MLD-2, MLC-4
3) SMB-2, SMC-2, SM_-2/4
4) SMD-2
5) all 225 excl 3) 4) 6)
6) SMD-4

A) Flange opening is provided with pipe flange FL 13, with tapped lead-in holes plugged with sealing plugs 2 x M40 + M16. Motors for 230VD 50Hz have pipe flange FL21 and 2 x M63 + M16
B) For flange opening FL13: 2 x M40 + M16
C) For extra large flange opening FL21: 2 x M63 + M16
D) For IM B5 and IM B35: Shoulder of shaft extension and contact surface of flange are in the same plane.

Above table gives the main dimensions in mm.

For detailed drawings please see our web-pages 'www.abb.com/motors&drives' or contact us.

General purpose aluminum motors M3AA 250-280

Dimension drawings

Foot-mounted motor; IM B3 (IM 1001), IM 1002

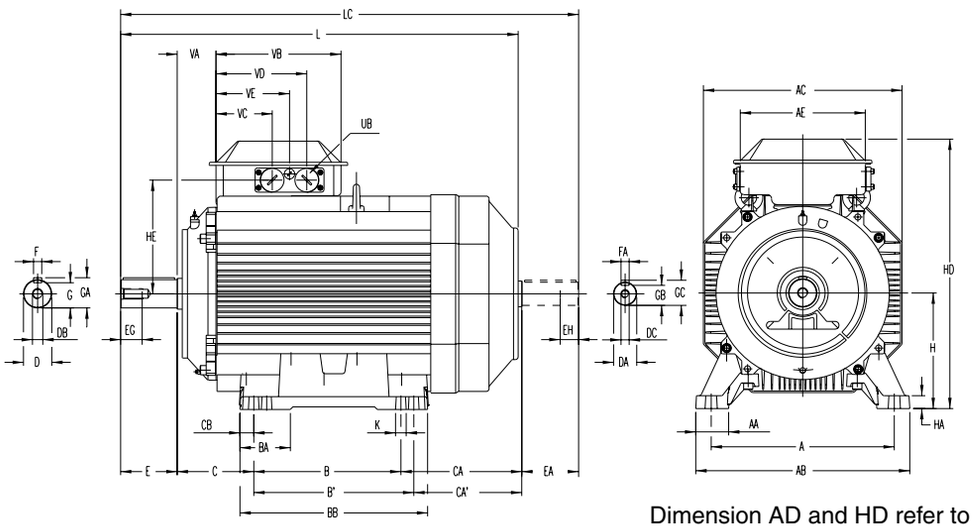

Dimension AD and HD refer to side mounted terminal box, see page 73.

IM B3 (IM 1001), IM 1002

Motor size	A	AA	AB	AC	AE	B	B'	BA	BB	C	CA	CA'	CB	D	DA	DB	DC	E[D]	EA	EG	EH	F	FA
250[1]	406	78	474	471	243	311	349	94.5	409	168	263	225	40	60	55	M20	M20	140	110	42	42	18	16
250[2]	406	78	474	471	243	311	349	94.5	409	168	288	250	40	60	55	M20	M20	140	110	42	42	18	16
250[3]	406	78	474	471	243	311	349	94.5	409	168	263	225	30	65	55	M20	M20	140	110	42	42	18	16
250[4]	406	78	474	471	243	311	349	94.5	409	168	263	225	30	65	55	M20	M20	140	110	42	42	18	16
280[5]	457	102.5	525	471	243	368	419	90.5	489	190	184	133	37.5	65	55	M20	M20	140	110	42	42	18	16
280[6]	457	102.5	525	471	243	368	419	90.5	489	190	209	158	37.5	65	55	M20	M20	140	110	42	42	18	16
280[7]	457	102.5	525	471	243	368	419	90.5	489	190	184	133	37.5	75	55	M20	M20	140	110	42	42	20	16
280[8]	457	102.5	525	471	243	368	419	90.5	489	190	209	160	37.5	75	55	M20	M20	140	110	42	42	20	16

Motor size	G	GA	GB	GC	H	HA	HD[B]	HD[C]	HE	K	L	LC	UB[A]	VA	VB	VC[B]	VC[C]	VD[B]	VD[C]	VE[B]	VE[C]
250[1]	53	64	49	59	250	40	594	626	267.5	22	875	992	2xFL13	93.5	243	109.5	81.5	176.5	171.5	143	126.5
250[2]	53	64	49	59	250	40	594	626	267.5	22	900	1017	2xFL13	93.5	243	109.5	81.5	176.5	171.5	143	126.5
250[3]	58	69	49	59	250	30	594	626	267.5	22	875	992	2xFL13	93.5	243	109.5	81.5	176.5	171.5	143	126.5
250[4]	58	69	49	59	250	30	594	626	267.5	22	900	1017	2xFL13	93.5	243	109.5	81.5	176.5	171.5	143	126.5
280[5]	58	69	49	59	280	40	-	656	283.5	24	875	992	2xFL21	93.5	243	-	76.5	-	166.5	-	121.5
280[6]	58	69	49	59	280	40	-	656	283.5	24	900	1017	2xFL21	93.5	243	-	76.5	-	166.5	-	121.5
280[7]	67.5	79.5	49	59	280	40	-	656	283.5	24	875	992	2xFL21	93.5	243	-	76.5	-	166.5	-	121.5
280[8]	67.5	79.5	49	59	280	40	-	656	283.5	24	900	1017	2xFL21	93.5	243	-	76.5	-	166.5	-	121.5

Tolerances

A,B	ISO js14
C, CA	+0 -2
D 55-65	ISO m6
DA 45-55	ISO k6
F, FA	ISO h9
H	+0 -0.5
N	ISO j6

1) SMA-2, SMB-2, SMB2/4
2) SMC-2
3) all 250 excl 1) 2) 4)
4) SMC-4
5) SMA-2
6) SMB-2
7) SMA-4-8
8) SMB-4

A) Flange opening is provided with pipe flange FL 13, with tapped lead-in holes plugged with sealing plugs 2 x M40 + M16. Motors for 230VD 50Hz have pipe flange FL21 and 2 x M63 + M16
B) For flange opening FL13: 2 x M40 + M16
C) For extra large flange opening FL21: 2 x M63 + M16
D) For IM B5 and IM B35: Shoulder of shaft extension and contact surface of flange are in the same plane.

Above table gives the main dimensions in mm.

For detailed drawings please see our web-pages 'www.abb.com/motors&drives' or contact us.

Dimension drawings

Flange-mounted motor; IM B5 (IM 3001), IM 3002

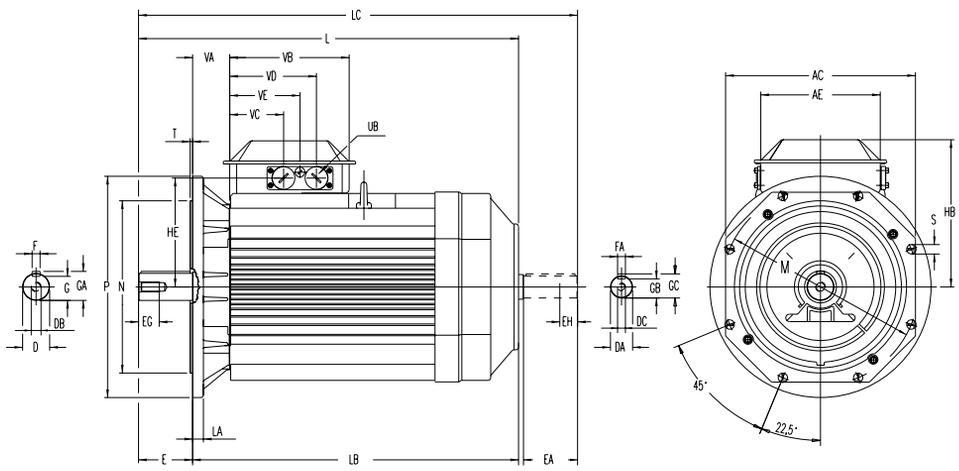

M3AA 250-280

IM B5 (IM 3001), IM 3002

Motor size	AC	AE	D	DA	DB	DC	E[D)]	EA	EG	EH	F	FA	G	GA	GB	GC	HB[B)]	HB[C)]	HE
250[7)]	471	243	60	55	M20	M20	140	110	42	42	18	16	53	64	49	59	344	376	267.5
250[8)]	471	243	60	55	M20	M20	140	110	42	42	18	16	53	64	49	59	344	376	267.5
250[9)]	471	243	65	55	M20	M20	140	110	42	42	18	16	58	69	49	59	344	376	267.5
250[10)]	471	243	65	55	M20	M20	140	110	42	42	18	16	58	69	49	59	344	376	267.5
280[11)]	471	243	65	55	M20	M20	140	110	42	42	18	16	58	69	49	59	-	376	283.5
280[12)]	471	243	65	55	M20	M20	140	110	42	42	18	16	58	69	49	59	-	376	283.5
280[13)]	471	243	75	55	M20	M20	140	110	42	42	20	16	67.5	79.5	49	59	-	376	283.5
280[14)]	471	243	75	55	M20	M20	140	110	42	42	20	16	67.5	79.5	49	59	-	376	283.5

Motor size	L	LA	LB	LC	M	N	P	S	T	UB[A)]	VA	VB	VC[B)]	VC[C)]	VD[B)]	VD[C)]	VE[B)]	VE[C)]
250[1)]	875	25	735	992	500	450	550	19	5	2xFL13	93.5	243	109.5	81.5	176.5	171.5	143	126.5
250[2)]	900	25	760	1017	500	450	550	19	5	2xFL13	93.5	243	109.5	81.5	176.5	171.5	143	126.5
250[3)]	875	25	735	992	500	450	550	19	5	2xFL13	93.5	243	109.5	81.5	176.5	171.5	143	126.5
250[4)]	900	25	760	1017	500	450	550	19	5	2xFL13	93.5	243	109.5	81.5	176.5	171.5	143	126.5
280[5)]	875	25	735	992	500	450	550	19	5	2xFL21	93.5	243	-	76.5	-	166.5	-	121.5
280[6)]	900	25	760	1017	500	450	550	19	5	2xFL21	93.5	243	-	76.5	-	166.5	-	121.5
280[7)]	875	25	735	992	500	450	550	19	5	2xFL21	93.5	243	-	76.5	-	166.5	-	121.5
280[8)]	900	25	760	1017	500	450	550	19	5	2xFL21	93.5	243	-	76.5	-	166.5	-	121.5

Tolerances

A,B	ISO js14
C, CA	+0 -2
D 55-65	ISO m6
DA 45-55	ISO k6
F, FA	ISO h9
H	+0 -0.5
N	ISO j6

1) SMA-2, SMB-2, SMB2/4
2) SMC-2
3) all 250 excl 1) 2) 4)
4) SMC-4
5) SMA-2
6) SMB-2
7) SMA-4-8
8) SMB-4

A) Flange opening is provided with pipe flange FL 13, with tapped lead-in holes plugged with sealing plugs 2 x M40 + M16. Motors for 230VD 50Hz have pipe flange FL21 and 2 x M63 + M16
B) For flange opening FL13: 2 x M40 + M16
C) For extra large flange opening FL21: 2 x M63 + M16
D) For IM B5 and IM B35: Shoulder of shaft extension and contact surface of flange are in the same plane.

Above table gives the main dimensions in mm.

For detailed drawings please see our web-pages 'www.abb.com/motors&drives' or contact us.

General purpose aluminum motors M3AA 250-280

Dimension drawings

Foot- and flange-mounted motor; IM B35 (IM 2001), IM 2002

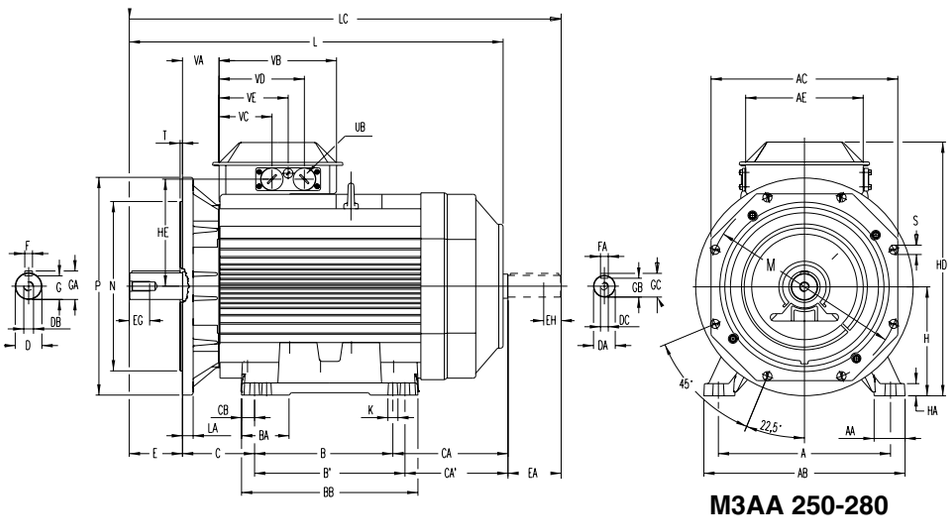

M3AA 250-280

IM B35 (IM 2001), IM 2002

Motor size	A	AA	AB	AC	AE	B	B'	BA	BB	C	CA	CA'	CB	D	DA	DB	DC	E[D]	EA	EG	EH	F	FA	G	GA	GB	GC
250[1]	406	78	474	471	243	311	349	94.5	409	168	263	225	40	60	55	M20	M20	140	110	42	42	18	16	53	64	49	59
250[2]	406	78	474	471	243	311	349	94.5	409	168	288	250	40	60	55	M20	M20	140	110	42	42	18	16	53	64	49	59
250[3]	406	78	474	471	243	311	349	94.5	409	168	263	225	30	65	55	M20	M20	140	110	42	42	18	16	58	69	49	59
250[4]	406	78	474	471	243	311	349	94.5	409	168	263	225	30	65	55	M20	M20	140	110	42	42	18	16	58	69	49	59
280[5]	457	103	525	471	243	368	419	90.5	489	190	184	133	38	65	55	M20	M20	140	110	42	42	18	16	58	69	49	59
280[6]	457	103	525	471	243	368	419	90.5	489	190	209	158	38	65	55	M20	M20	140	110	42	42	18	16	58	69	49	59
280[7]	457	103	525	471	243	368	419	90.5	489	190	184	133	38	75	55	M20	M20	140	110	42	42	20	16	68	80	49	59
280[8]	457	103	525	471	243	368	419	90.5	489	190	209	160	38	75	55	M20	M20	140	110	42	42	20	16	68	80	49	59

Motor size	H	HA	HB[B]	HB[C]	HD[B]	HD[C]	HE	K	L	LA	LB	LC	M	N	P	S	T	UB[A]	VA	VB	VC[B]	VC[C]	VD[B]	VD[C]	VE[B]	VE[C]
250[1]	250	40	344	376	594	626	268	22	875	25	735	992	500	450	550	19	5	2xFL13	93.5	243	110	81.5	176.5	171.5	143	126.5
250[2]	250	40	344	376	594	626	268	22	900	25	760	1017	500	450	550	19	5	2xFL13	93.5	243	110	81.5	176.5	171.5	143	126.5
250[3]	250	30	344	376	594	626	268	22	875	25	735	992	500	450	550	19	5	2xFL13	93.5	243	110	81.5	176.5	171.5	143	126.5
250[4]	250	30	344	376	594	626	268	22	900	25	760	1017	500	450	550	19	5	2xFL13	93.5	243	110	81.5	176.5	171.5	143	126.5
280[5]	280	40	-	376	-	656	284	24	875	25	735	992	500	450	550	19	5	2xFL21	93.5	243	-	76.5	-	166.5	-	121.5
280[6]	280	40	-	376	-	656	284	24	900	25	760	1017	500	450	550	19	5	2xFL21	93.5	243	-	76.5	-	166.5	-	121.5
280[7]	280	40	-	376	-	656	284	24	875	25	735	992	500	450	550	19	5	2xFL21	93.5	243	-	76.5	-	166.5	-	121.5
280[8]	280	40	-	376	-	656	284	24	900	25	760	1017	500	450	550	19	5	2xFL21	93.5	243	-	76.5	-	166.5	-	121.5

Tolerances

A,B	ISO js14
C, CA	+0 -2
D 55-65	ISO m6
DA 45-55	ISO k6
F, FA	ISO h9
H	+0 -0.5
N	ISO js6

1) SMA-2, SMB-2, SMB24
2) SMC-2
3) all 250 excl 1) 2) 4)
4) SMC-4
5) SMA-2
6) SMB-2
7) SMA-4-8
8) SMB-4

A) Flange opening is provided with pipe flange FL 13, with tapped lead-in holes plugged with sealing plugs 2 x M40 + M16. Motors for 230VD 50Hz have pipe flange FL21 and 2 x M63 + M16
B) For flange opening FL13: 2 x M40 + M16
C) For extra large flange opening FL21: 2 x M63 + M16
D) For IM B5 and IM B35: Shoulder of shaft extension and contact surface of flange are in the same plane.

Above table gives the main dimensions in mm.

For detailed drawings please see our web-pages 'www.abb.com/motors&drives' or contact us.

Dimensions for terminal box

Code 019 Larger than standard terminal box

Motor size	Dimensions AD	HB	HD	HE
M2AA 225 S/M	-	332.5	557.5	240
M2AA 250 M	-	353	578	260.5
M3AA 200 ML.	332.5	332.5	603	240
M3AA 225 SM.	353	353	578	260.5
M3AA 250 SM.	376	376	626	283.5

Code 021 Terminal box on left-hand side seen from D end
Code 180 Terminal box on right-hand side seen from D end

Motor size	Dimensions AD	HD
M2AA 225 - 250	On request	
M3AA 200 ML.	300.5	412.5
M3AA 225 SM.	321	452
M3AA 250 SM.	344	494
M3AA 280	376	524

Code 467 M2AA 160-250 on request.
Lower than standard terminal box without screw terminals and extended rubber connection cable 2 m.

Motor size	Dimensions AD	HB	HD
112 M		123.5	235.5
132 S		141	273
132 M		141	273
160		211.5	371.5
180		226.5	406.5
200 ML.	248	248	448
225 SM.	269	269	494
250 SM.	292	292	542
280	292	292	572

Accessories

Protective roof and variable speed drives

Protective roof
Variant code 005

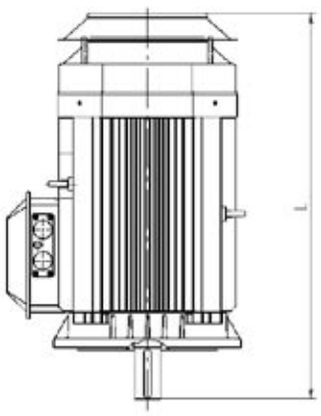

Tacho
Variant codes; 472, 473, 572 and 573

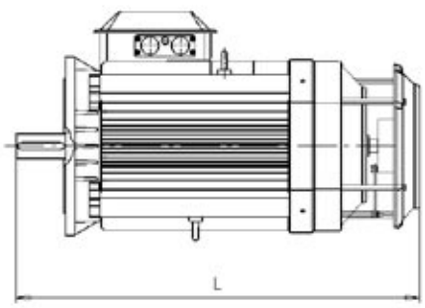

Separate cooling with or without tacho
Variant codes; 183, 474, 476, 477, 189, 574, 576 and 577

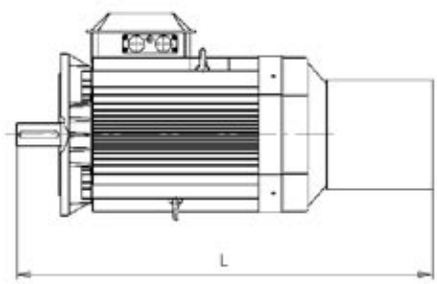

Variant codes	005	183	189	472, 473 572, 573 576, 577	474, 476 477, 574
Motor size	L	L	L	L	L
56	216	-	-	-	-
63	224	-	275	-	-
71	261	352	287	304	352
80	288	373	313	326	373
90 S	318	1)	1)	1)	1)
90 L	343	1)	1)	1)	1)
100 L	385	1)	1)	1)	1)

1) On request.

Variant codes; M2AA	Pole	005	183	189	472, 473 572, 573	474, 476 477, 574 576, 577
Motor size		L	L	L	L	L
112	2-4	400	-	493.5	458.5	543.5
132	2-4	484	-	580.5	542	630.5
160[1]	2-4	653.5	1015.5	870.5	697	1015.5
180[2]	2-4	653.5	1015.5	870.5	697	1015.5
180[3]	4	694.5	1056.5	911.5	738	1056.5
200[4]	4	762.5	1128.5	983.5	806	1128.5
200[5]	2-4	783	1149	1004	826.5	1149
225 M	2	824	1233	1088	867	1233
225 S	4	854	1263	1118	897	1263
225 M	4	894	1303	1158	937	1303
250 M	2-4	915	1325	1180	960	1325

1) MA-2, M-2, L-2, M-4, L-4
2) M-2, M-4
3) L-4
4) LA-4
5) L-2, L-4

Accessories

Protective roof and variable speed drives

Protective roof
Variant code 005

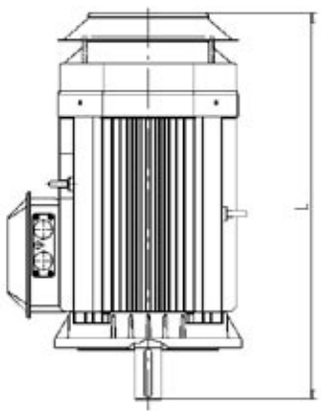

Tacho
Variant codes; 472, 473, 572 and 573

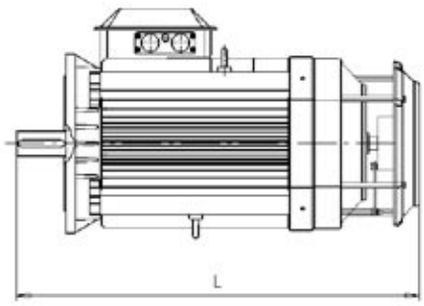

Separate cooling with or without tacho
Variant codes; 183, 474, 476, 477, 189, 574, 576 and 577

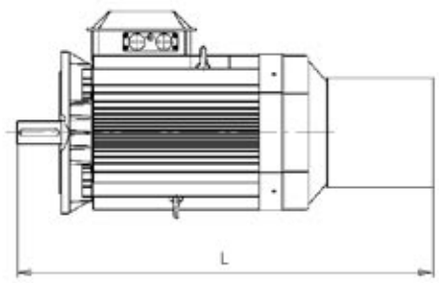

Variant codes; M3AA	005	183	189	472, 473 572, 573	474, 476 477, 574 576, 577
Motor size	L	L	L	L	L
112[1)]	400	-	493.5	458.5	543.5
112[2)]	428	-	538	487	588
132[3)]	484	-	580.5	542	630.5
132[4)]	522	-	640	580	690
160[5)]	653.5	1015.5	870.5	697	1015.5
160[6)]	694.5	1056.5	911.5	738	1056.5
180[7)]	731	1097	952	774	1097
180[8)]	751.5	1117.5	972.5	795	1117.5
200[9)]	825	1234	1089	868	1234
200[10)]	865	1274	1129	908	1274
225[11)]	885	1295	1150	930	1295
225[12)]	910	1320	1175	955	1320
225[13)]	915	1325	1180	960	1325
225[14)]	940	1350	1205	985	1350
250[15)]	922	1346	1201	969	1346
250[16)]	947	1371	1226	994	1371
280[17)]	922	1346	1201	969	1346
280[18)]	947	1371	1226	994	1371

1) M-6, M-8,
2) all 112 excl 1)
3) SA-2, S-4, S-6, MA-6, MB-6, S-8, M-8, S-Two-speed
4) all 132 excl 3)
5) M-2, MA-2, M-4, M-6, M-8, MA-8, L-2, L-4, L-6, MA-2/4, M-2/4, L-2/4, M-4/6, M-4/8, LB-2, LB-4
6) L-8, L-4/6, L-4/8, LB-6, LB-8.
7) M-2, M-4, L-6, L-8, M-2/4, M-4/6, M-4/8, LB-2
8) L-2/4, L-4/6, L-4/8, L-4, LB-4, LB-6, LB-8.
9) all 200 excl 10)
10) MLD-2, MLC-4
11) SMB-2, SMC-2, SM_-2/4
12) SMD-2,
13) all 225 excl 11) 12) 14)
14) SMD-4
15) all 250 excl 16)
16) SMC-2, SMC-4
17) all 280 excl 18)
18) SMB-2, SMB-4

Accessories

Slide rails for motor sizes 112-280

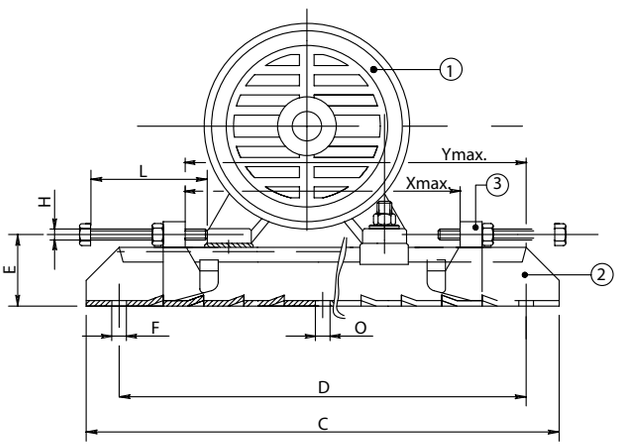

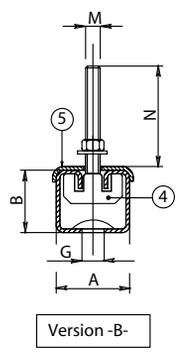

Motorsize	Type	Product code 3GZV103001-	A	B	C	D	E	F	G	H	L	M	N	O	Xmax	Ymax	weight kg
112-132	TT132/10	-12	65	40	530	480	52	17	26	M12	120	M10	45	-	360	420	7,8
160-180	TT180/12	-14	75	42	700	630	57	17	26	M12	120	M12	50	-	520	580	12,0
200-225	TT225/16	-15	82	50	864	800	68	17	27	M16	140	M16	65	17	670	740	20,4
250-280	TT280/20	-16	116	70	1072	1000	90	20	27	M18	150	M20	80	20	870	940	43,0

1) When mounting on a ceiling or on a wall please contact the manufacturer.

Tolerances

A,B	ISO js14
C, CA	+0 -2
D 55-65	ISO m6
DA 45-55	ISO k6
F, FA	ISO h9
H	+0 -0.5
N	ISO js6

Each set includes two complete slide rails including screw for mounting the motor on the rails. Screws for mounting the rails on the foundation are not included. Slide rails are supplied with unmachined lower surfaces and should, prior to tightenng down, be supported in a suitable manner.

General purpose aluminum motors in brief, basic design

Size		56	63	71	80	90	100
Stator and feet	Material Paint colour shade Paint	Diecast aluminum alloy. Loose feet in sizes 71-100; feet integrated with stator in sizes 56-63. Munsell blue 8B 4.5/3.25 / NCS 4822 B05G / RAL 5014 Epoxy polyester powder paint , ≥ 30µm				Polyester powder paint, ≥ 30µm	
Bearing end shields	Material Paint colour shade Paint	Diecast aluminum alloy Munsell blue 8B 4.5/3.25 / NCS 4822 B05G / RAL 5014 Epoxy polyester powder paint , ≥ 30µm				Polyester powder paint, ≥ 30µm	
Bearings Single-speed motor	D-end N-end	6201-2Z/C3 6201-2Z/C3	6202-2Z/C3 6201-2Z/C3	6203-2Z/C3 6202-2Z/C3	6204-2Z/C3 6203-2Z/C3	6205-2Z/C3 6204-2Z/C3	6306-2Z/C3 6205-2Z/C3
Bearings Two-speed motor	D-end N-end	6201-2Z/C3 6201-2Z/C3	6202-2Z/C3 6201-2Z/C3	6203-2Z/C3 6202-2Z/C3	6204-2Z/C3 6203-2Z/C3	6205-2Z/C3 6204-2Z/C3	6306-2Z/C3 6205-2Z/C3
Axially-locked bearings	Inner bearing cover	Spring washer at the N-end.				D-end	
Bearing seals	D-end N-end	V-ring Labyrinth seal.					
Lubrication		Permanently lubricated bearings. Grease for bearing temperatures -30 to +110°C.					
Terminal box	Material Surface treatment Screws	Diecast aluminum alloy. Similar to stator. Steel 5G. Chromated.					
Connections	Knock-out openings Max Cu-area mm² Terminal box	1 x M16 x Pg11 2.5 Screw terminal, 6 terminals		2 x M20, 2 x Pg16 4		2 x (M20 + M25) 6	
Fan	Material	Polypropylene. Reinforced with 20% glass fibre.					
Fan cover	Material	Steel.					
Stator winding	Material Impregnation Insulation class	Copper. Polyester varnish. Tropicalised. Insulation class F. Temperature rise class B, unless otherwise stated.					
Stator winding temperature sensors		Optional.					
Rotor winding	Material	Diecast aluminum.					
Balancing method		Half key balancing.					
Key ways		Closed keyway					
Heating elements	On request	8 W			25 W		
Enclosure		IP 55.					
Cooling method		IC 411.					
Drain holes		Standard.					

2

Size	M2AA	112	132	160	180	200	225	250
Stator	Material	Diecast aluminum alloy.					Extruded aluminum alloy.	
	Paint colour shade Paint	Munsell blue 8B 4.5/3.25 / NCS 4822 B05G / RAL 5014 Polyester powderpaint, ≥ 50µm						
Feet	Material	Aluminum alloy, integrated with stator.			Cast iron bolted to the stator.			
Bearing end shields	Material	Diecast aluminum alloy			Flanged bearing end shields cast iron, others diecast Aluminum. 280 N-end shields cast iron in 2-pole motors.			
	Paint colour shade Paint	Munsell blue 8B 4.5/3.25 / NCS 4822 B05G / RAL 5014 Polyester powderpaint, ≥ 50µm						
Bearings Single-speed motor	D-end N-end	6206-2Z/C3 6205-2Z/C3	6208-2Z/C3 6206-2Z/C3	6309-2Z/C3 6209-2Z/C3	6310-2Z/C3 6209-2Z/C3	6312/C3 6209-2Z/C3	6313/C3 6210/C3	6315/C3 6212/C3
Bearings Two-speed motor	D-end N-end	NA NA						
Axially-locked bearings	Inner bearing cover	D-end[1)]		D-end				
		[1)] Foot motor. A spring washer at the N-end presses the motor towards the D-end.						
Bearing seals	D-end N-end	V-ring Labyrinth seal.					Outer and inner V-rings. Outer and inner V-rings.	
Lubrication		Permanently lubricated shielded bearings. Grease temperature range -40 to +160°C.					Valve lubrication. Grease temp. range -40 to 150°C.	
Terminal box	Material Surface treatment	Diecast aluminum alloy,base integrated with stator. Similar to stator.					Deep-drawn steel sheet, bolted to stator. Phosphated. Polyester paint.	
	Screws	Steel 5G. Galvanised.						
Connections	Knock-out openings Flange-openings	2 x (M25 + M20)		2 x (2 x M40 + M16)			2 x FL13, 2 x M40 2 x FL 21, 2 x M63 (voltage code S)	
	Screws Max Cu-area mm²	M5 10		M6 35			M10 70	
Terminal box		Cable lugs, 6 terminals						
Fan	Material	Polypropylene. Reinforced with 20% glass fibre.						
Fan cover	Material Surface treatment	Polypropylene.		Steel sheet. Also two-speed sizes 112 and 132 M. Phosphated. Polyester paint.				
Stator winding	Material Impregnation Insulation class	Copper. Polyester varnish. Tropicalised. Insulation class F. Temperature rise class B, unless otherwise stated.						
Stator winding temperature sensors		Optional.					PTC thermistors, 150°C, 3 in series.	
Rotor winding	Material	Diecast aluminum.						
Balancing method		Half key balancing.						
Key ways		Closed keyway						
Heating elements	On request	25 W			50 W			
Enclosure		IP 55.						
Cooling method		IC 411.						
Drain holes		Drain holes with closable plastic plugs, open on delivery.						

Size	M3AA	112	132	160	180	200	225	250	280
Stator	Material	Diecast aluminum alloy.				Extruded aluminum alloy.			
	Paint colour shade Paint	Munsell blue 8B 4.5/3.25 / NCS 4822 B05G / RAL 5014 Polyester powderpaint, ≥ 50µm							
Feet	Material	Aluminum alloy, integrated with stator.				Aluminum[1] alloy, bolted to the stator. [1] 250-2, cast iron			Cast iron
Bearing end shields	Material	Diecast aluminum alloy			Flanged bearing end shields cast iron, others diecast Aluminum.				Cast iron
	Paint colour shade Paint	Munsell blue 8B 4.5/3.25 / NCS 4822 B05G / RAL 5014 Polyester powderpaint, ≥ 50µm							
Bearings Single-speed motor	D-end N-end [2] N-end [3]	6206-2Z/C3 6205-2Z/C3 6206-2Z/C3	6208-2Z/C3 6206-2Z/C3 6208-2Z/C3	6309-2Z/C3 6209-2Z/C3	6310-2Z/C3 6209-2Z/C3	6312/C3 6210/C3	6313/C3 6212/C3	6315/C3 6213/C3	6316/C3[1] 6213/C3
		[1] 6315/C3 for 2-pole motors [2] M3AA 112: M-6, M-8, M3AA 132: SA-2, S-4, S-6, MA-6, MB-6, S-8 and M-8. [3] All motors sizes 112-132 not included in [2].							
Bearings Two-speed motor	D-end N-end [1] N-end [2]	6206-2Z/C3 6206-2Z/C3 6205-2Z/C3	6208-2Z/C3 6206-2Z/C3 6206-2Z/C3	6309-2Z/C3 6209-2Z/C3	6310-2Z/C3 6209-2Z/C3	6312/C3 6210/C3	6313/C3 6212/C3	6315/C3 6213/C3	NA
		[1] M3AA 112, M3AA 132M.			[2] M3AA 132S				
Axially-locked bearings	Inner bearing cover	D-end[1]		D-end					
		[1] Foot motor. A spring washer at the N-end presses the motor towards the D-end.							
Bearing seals	D-end N-end	V-ring Labyrinth seal. Except two-speed motors 112-132M, outer and inner V-rings.				Outer and inner V-rings. Outer and inner V-rings.			
Lubrication		Permanently lubricated shielded bearings. Grease temperature range -40 to +160°C.				Valve lubrication. Grease temp. range -40 to 150°C.			
Terminal box	Material Surface treatment Screws	Diecast aluminum alloy,base integrated with stator. Similar to stator. Steel 5G. Galvanised.				Deep-drawn steel sheet, bolted to stator. Phosphated. Polyester paint.			
Connections	Knock-out openings Flange-openings	2 x (M25 + M20)		2 x (2 x M40 + M16)		2 x FL13, 2 x M40 2 x FL 21, 2 x M63 (voltage code S)			2 x FL21 2 x M63 1 x M16
	Screws Max Cu-area mm²	M5 10		M6 35		M10 70			
Terminal box		Cable lugs, 6 terminals							
Fan	Material	Polypropylene. Reinforced with 20% glass fibre.							
Fan cover	Material Surface treatment	Polypropylene.		Steel sheet. Also two-speed sizes 112 and 132 M. Phosphated. Polyester paint.					
Stator winding	Material Impregnation Insulation class	Copper. Polyester varnish. Tropicalised. Insulation class F. Temperature rise class B, unless otherwise stated.							
Stator winding temperature sensors		Optional.				PTC thermistors, 150°C, 3 in series.			
Rotor winding	Material	Diecast aluminum.							
Balancing method		Half key balancing.							
Key ways		Closed keyway							
Heating elements	On request	25 W			50 W				
Enclosure		IP 55.							
Cooling method		IC 411.							

2

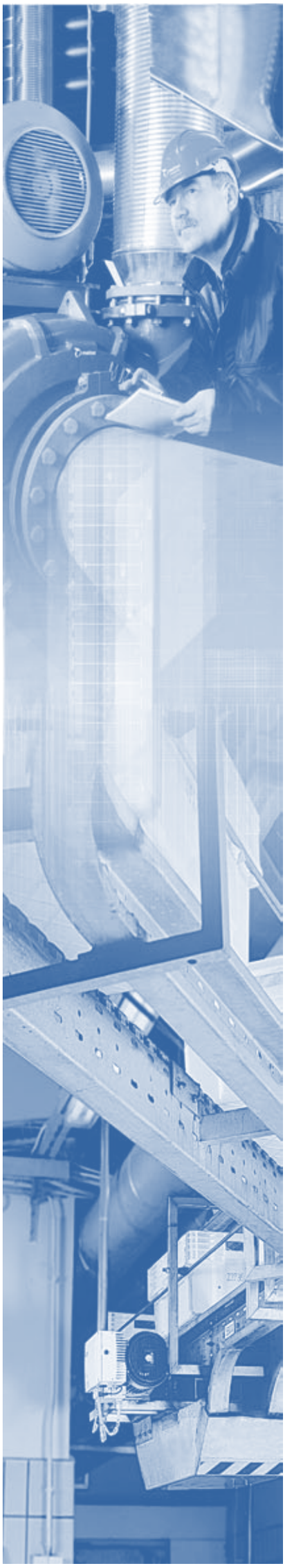

General Purpose Steel Motors

Totally enclosed squirrel cage three phase low voltage motors,
Sizes 280 - 400, 75 to 630 kW

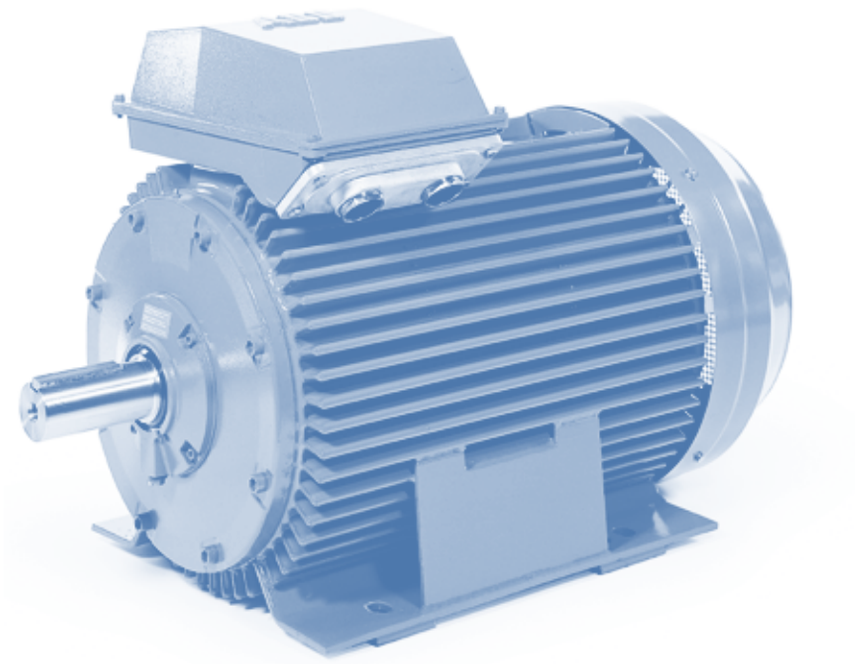

3

www.abb.com/motor&drives
> Motors
> Low voltage motors
> General purpose motors

Mechanical design 82
Ordering information 89
Technical data 90
Variant codes 95
Dimension drawings 98
Rating plates 108
Steel motors in brief 111

Mechanical design

Stator

The stator frame is made of profile-pressed sheet steel, giving the motor high mechanical strength, low weight and a good surface finish. The stator core is welded into the stator frame and contributes to its excellent mechanical properties.

Feet and lifting eyes are welded to the stator frame. The terminal box and end shields are of cast iron.

Drain holes

Motors that will be operated in very humid or wet environments, and especially under intermittent duty, should be provided with drain holes. The appropriate IM designation, such as IM V3 (IM 3031), is specified, on the basis of the method of motor mounting.

M2CA motors are fitted with drain holes and plugs. The plugs are open on delivery. Check that the drain holes and grease outlet face downwards, when mounting designation differs from standard horizontal mounting.

In the case of vertical mounting, the upper plug must be hammered home completely. In very dusty environments the drain hole plug should be knocked in.

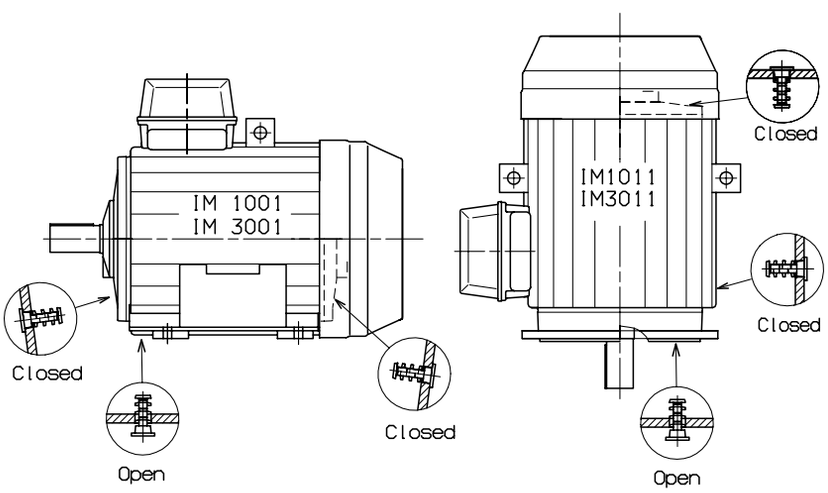

Terminal box

Terminal boxes are mounted either on the top of the motor, or on either side of the motor, see ordering information.

In basic version the terminal box can be rotated 2x180° to allow cable entry from either side of the motor, as option the terminal box can be turned 4x90°.

Degree of protection of standard terminal box is IP 55.

The terminal box is equipped with cable glands or cable boxes as standard, and terminations are suitable for Cu- and Al-cables. Cables are connected to the terminals by cable lugs which are not included with the motor.

To enable us to supply suitable terminations for the motor please state cable type, quantity and size when ordering. Non-standard design of terminal boxes; e.g. size, degree of protection, are available as options.

Please see variant codes for options and dimension drawings of terminal boxes.

Co-ordination of terminal boxes and cable entries

If no ordering information on the cable is given, it is assumed to be p.v.c. -insulated type and termination parts are supplied according to the table below and on next page.

Deviations from standard design according to the following tables are available on request.

M2CA 280-400 motors with top-mounted terminal box
Standard cable entries and cable boxes

Voltage 220 - 690 V, 50 Hz

Motor size M2CA	Terminal box	Flange or adapter	Cable box or cable gland	Gland thread	Cable diameter	Max. connection cable area mm²	Terminal bolt size	Voltage/ freq. code
3000 r/min (2 poles)								
280	122/4	3GZF 294730-749	2x 3GZF 294730-613	**2x M63x1.5**	2x Ø32-49	2x150	M12	
315 S_,M_,LA,LB	142/4	3GZF 294730-753	2x 3GZF 294730-613	**2x M63x1.5**	2x Ø32-49	2x240	M12	
315 LC	162/4	3GZF 294730-944	3GZF 294730-301		2x Ø48-60	4x240	M12	
355 SA	142/4	3GZF 294730-753	2x 3GZF 294730-613	**2x M63x1.5**	2x Ø32-49	2x240	M12	
355 M_	162/4	3GZF 294730-944	3GZF 294730-301		2x Ø48-60	4x240	M12	D
	142/4	-	3GZF 294730-301		2x Ø48-60	2x240	M12	E
355 L_	162/4	3GZF 294730-944	3GZF 294730-301		2x Ø48-60	4x240	M12	
400 M_	162/4	3GZF 294730-944	3GZF 294730-501		2x Ø60-80	4x240	M12	
400 LK_	162/9	3GZF 294730-944	3GZF 294730-501		2x Ø60-80	4x240	M12	
1500 r/min (4 poles)								
280	122/4	3GZF 294730-749	2x 3GZF 294730-613	**2x M63x1.5**	2x Ø32-49	2x150	M12	
315 S_,M_,LA,LB	142/4	3GZF 294730-753	2x 3GZF 294730-613	**2x M63x1.5**	2x Ø32-49	2x240	M12	
315 LC	162/4	3GZF 294730-944	3GZF 294730-301		2x Ø48-60	4x240	M12	
355 SA	142/4	3GZF 294730-753	2x 3GZF 294730-613	**2x M63x1.5**	2x Ø32-49	2x240	M12	
355 M_	162/4	3GZF 294730-944	3GZF 294730-301		2x Ø48-60	4x240	M12	D
	142/4	-	3GZF 294730-301		2x Ø48-60	2x240	M12	E
355 LA, LB	162/4	3GZF 294730-944	3GZF 294730-301		2x Ø48-60	4x240	M12	
355 LKD	162/4	3GZF 294730-944	3GZF 294730-501		2x Ø60-80	4x240	M12	
400 M_	162/4	3GZF 294730-944	3GZF 294730-501		2x Ø60-80	4x240	M12	
400 LKA	162/9	3GZF 294730-944	3GZF 294730-501		2x Ø60-80	4x240	M12	D
	162/4	3GZF 294730-944	3GZF 294730-501		2x Ø60-80	4x240	M12	E
400 LKB, LKC	162/9	3GZF 294730-944	3GZF 294730-501		2x Ø60-80	4x240	M12	
1000 r/min (6 poles)								
280	122/4	3GZF 294730-749	2x 3GZF 294730-613	**2x M63x1.5**	2x Ø32-49	2x150	M12	
315 S_,M_,LA,LB	142/4	3GZF 294730-753	2x 3GZF 294730-613	**2x M63x1.5**	2x Ø32-49	2x240	M12	
355 SA,SB	142/4	3GZF 294730-753	2x 3GZF 294730-613	**2x M63x1.5**	2x Ø32-49	2x240	M12	
355 MA	142/4	-	3GZF 294730-301		2x Ø48-60	2x240	M12	
355 MB	162/4	3GZF 294730-944	3GZF 294730-301		2x Ø48-60	4x240	M12	D
	142/4	-	3GZF 294730-301		2x Ø48-60	2x240	M12	E
355 LKD	162/4	3GZF 294730-944	3GZF 294730-301		2x Ø48-60	4x240	M12	
400 MLA	162/4	3GZF 294730-944	3GZF 294730-301		2x Ø60-80	4x240	M12	D
400 MLB	162/4	-	3GZF 294730-501		2x Ø48-60	2x240	M12	E
400 LK_	162/9	3GZF 294730-944	3GZF 294730-501		2x Ø60-80	4x240	M12	D
400 LK_	162/4	3GZF 294730-944	3GZF 294730-501		2x Ø60-80	4x240	M12	E
750 r/min (8 poles)								
280	122/4	3GZF 294730-749	2x 3GZF 294730-613	**2x M63x1.5**	2x Ø32-49	2x150	M12	
315	142/4	3GZF 294730-753	2x 3GZF 294730-613	**2x M63x1.5**	2x Ø32-49	2x240	M12	
355 SA, SB	142/4	3GZF 294730-753	2x 3GZF 294730-613	**2x M63x1.5**	2x Ø32-49	2x240	M12	
355 MA	142/4	-	3GZF 294730-301		2x Ø48-60	2x240	M12	
355 MB	142/4	-	3GZF 294730-301		2x Ø48-60	4x240	M12	D
355 MB	142/4	-	3GZF 294730-301		2x Ø48-60	2x240	M12	E
355 LKD	162/4	-	3GZF 294730-301		2x Ø48-60	4x240	M12	
400 MLA	162/4	3GZF 294730-944	3GZF 294730-301		2x Ø48-60	4x240	M12	D
	142/4	-	3GZF 294730-301		2x Ø48-60	2x240	M12	E
400 LKA	162/4	3GZF 294730-944	3GZF 294730-501		2x Ø60-80	4x240	M12	

Voltage/frequency codes:
D - 380-420 VD 50 Hz, 660-690 VY 50 Hz, 440-480 VD 60 Hz
E - 500 VD 50 Hz, 575 VD 60 Hz

Examples:

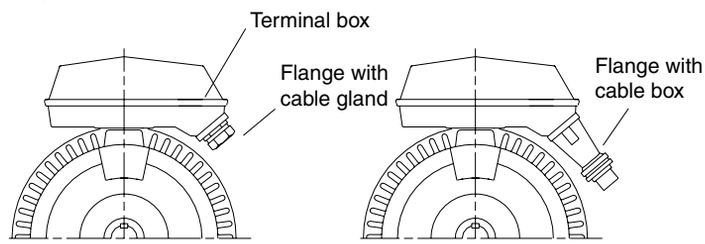

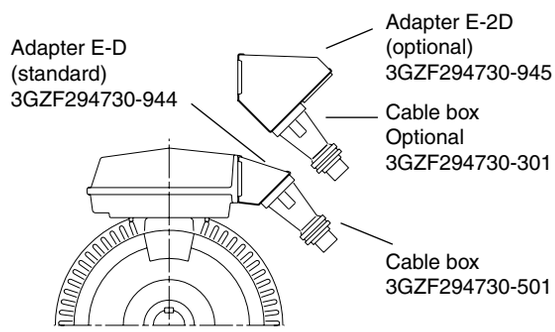

M2CA motors with side-mounted terminal box:

Standard cable entries and cable boxes — Voltage 220 - 690 V, 50 Hz

Motor size M2CA	Terminal box	Flange or adapter	Cable box or cable gland	Gland thread	Cable diameter	Max. connection cable area mm²	Terminal bolt size	Voltage/ freq. code
3000 r/min (2 poles)								
280	122/5	3GZF 294730-749	2x 3GZF 294730-613	**2x M63x1.5**	2x Ø32-49	2x150	M12	
315 S_,M_,LA,LB	142/6	3GZF 294730-753	2x 3GZF 294730-613	**2x M63x1.5**	2x Ø32-49	2x240	M12	
315 LC	162/7	3GZF 294730-759	3GZF 294730-301		2x Ø48-60	4x240	M12	
355 SA	142/6	3GZF 294730-753	2x 3GZF 294730-613	**2x M63x1.5**	2x Ø32-49	2x240	M12	
355 M_	162/7	3GZF 294730-759	3GZF 294730-301		2x Ø48-60	4x240	M12	D
	142/6	-	3GZF 294730-301		2x Ø48-60	2x240	M12	E
355 L_	162/7	3GZF 294730-759	3GZF 294730-301		2x Ø48-60	4x240	M12	
400 M_	162/7	3GZF 294730-759	3GZF 294703-501		2x Ø60-80	4x240	M12	
400 LK_	162/7	3GZF 294730-759	3GZF 294703-501		2x Ø60-80	4x240	M12	
1500 r/min (4 poles)								
280	122/5	3GZF 294730-749	2x 3GZF 294730-613	**2x M63x1.5**	2x Ø32-49	2x150	M12	
315 S_,M_,LA,LB	142/6	3GZF 294730-753	2x 3GZF 294730-613	**2x M63x1.5**	2x Ø32-49	2x240	M12	
315 LC	162/7	3GZF 294730-759	3GZF 294730-301		2x Ø48-60	4x240	M12	
355 SA	142/6	3GZF 294730-753	2x 3GZF 294730-613	**2x M63x1.5**	2x Ø32-49	2x240	M12	
355 M_	162/7	3GZF 294730-759	3GZF 294730-301		2x Ø48-60	4x240	M12	D
	142/6	-	3GZF 294730-301		2x Ø48-60	2x240	M12	E
355 LA, LB	162/7	3GZF 294730-759	3GZF 294730-301		2x Ø48-60	4x240	M12	
355 LKD	162/7	3GZF 294730-759	3GZF 294703-501		2x Ø60-80	4x240	M12	
400 M_	162/7	3GZF 294730-759	3GZF 294703-501		2x Ø60-80	4x240	M12	
400 LKA	162/7	3GZF 294730-759	3GZF 294703-501		2x Ø60-80	4x240	M12	D
	162/7	3GZF 294730-759	3GZF 294703-501		2x Ø60-80	4x240	M12	E
400 LKB, LKC	162/7	3GZF 294730-759	3GZF 294703-501		2x Ø60-80	4x240	M12	
1000 r/min (6 poles)								
280	122/5	3GZF 294730-749	2x 3GZF 294730-613	**2x M63x1.5**	2x Ø32-49	2x150	M12	
315 S_,M_,LA,LB	142/6	3GZF 294730-753	2x 3GZF 294730-613	**2x M63x1.5**	2x Ø32-49	2x240	M12	
355 SA,SB	142/6	3GZF 294730-753	2x 3GZF 294730-613	**2x M63x1.5**	2x Ø32-49	2x240	M12	
355 MA	142/6	-	3GZF 294730-301		2x Ø48-60	2x240	M12	
355 MB	162/7	3GZF 294730-759	3GZF 294730-301		2x Ø48-60	4x240	M12	D
	142/6	-	3GZF 294730-301		2x Ø48-60	2x240	M12	E
355 LKD	162/7	3GZF 294730-759	3GZF 294730-301		2x Ø48-60	4x240	M12	
400 ML_	162/7	3GZF 294730-759	3GZF 294703-501		2x Ø60-80	4x240	M12	D
	142/6	-	3GZF 294730-301		2x Ø48-60	2x240	M12	E
400 LK_	162/7	3GZF 294730-759	3GZF 294703-501		2x Ø60-80	4x240	M12	
750 r/min (8 poles)								
280	122/5	3GZF 294730-749	2x 3GZF 294730-613	**2x M63x1.5**	2x Ø32-49	2x150	M12	
315	142/6	3GZF 294730-753	2x 3GZF 294730-613	**2x M63x1.5**	2x Ø32-49	2x240	M12	
355 SA, SB	142/6	3GZF 294730-753	2x 3GZF 294730-613	**2x M63x1.5**	2x Ø32-49	2x240	M12	
355 MA	142/6	-	3GZF 294730-301		2x Ø48-60	2x240	M12	
355 MB	162/7	3GZF 294730-759	3GZF 294730-301		2x Ø48-60	4x240	M12	D
	142/6	-	3GZF 294730-301		2x Ø48-60	2x240	M12	E
355 LKD	162/7	3GZF 294730-759	3GZF 294730-301		2x Ø48-60	4x240	M12	D
400 MLA	162/7	3GZF 294730-759	3GZF 294730-301		2x Ø48-60	4x240	M12	D
	142/6	-	3GZF 294730-301		2x Ø48-60	2x240	M12	E
400 LK_	162/7	3GZF 294730-759	3GZF 294703-501		2x Ø60-80	4x240	M12	

Voltage/frequency codes:
D - 380-420 VD 50 Hz, 660-690 VY 50 Hz, 440-480 VD 60 Hz
E - 500 VD 50 Hz, 575 VD 60 Hz

Examples:

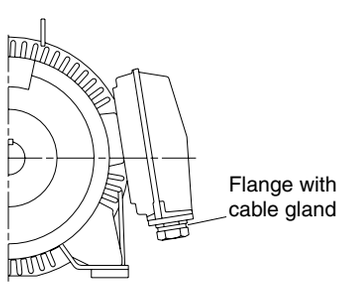

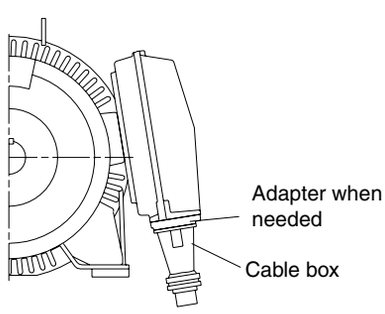

Auxiliary devices (view from N-end):

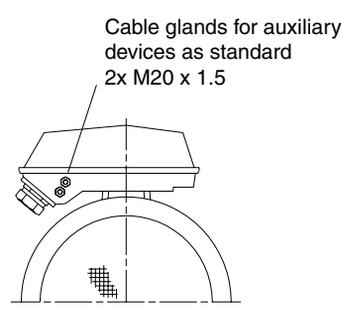

Alternatives for cable entries and cable boxes

The tables on previous pages show the standard terminal boxes and termination parts that are delivered when no information on the cable is given.
The table below shows the different alternatives available for cable boxes and cable entries. Other types on request.

Motor size	Terminal box on top	Terminal box on side	Opening type	Max. rated current A (Δ/Y-conn.)	Max.size of conductor mm²	Cable gland	Cable box	Blank plate
280	122/4	122/5	C (FL 21)	360/210	2x150	2xPg29...42	1xØ36...52/Ø48...60	MKLN 20
315 S_, M_, LA, LB	142/4	142/6	D (FL33)	640/370	2x240	1xPg36...42 2xPg36...48	1xØ36...52/Ø48...60 2xØ48...60/Ø50...68 2xØ68.. .80	MKLN 30
315 LC 355, 400	142/4	142/6	D (FL33)	640/370	2x240	1xPg36...42 2xPg36...48	1xØ36...52/Ø48...60 2xØ48...60/Ø50...68 2xØ68.. .80	MKLN 30
	162/4	162/7	E-D [1]	950/550	4x240	2xPg36...48 1xPg36...42	1xØ36...52/Ø48...60 2xØ48...60/Ø50...68 2xØ68.. .80	
	162/4	162/7	E-D [1]	1300/750	4x240	2xPg36...48 1xPg36...42	1xØ36...52/Ø48...60 2xØ48...60/Ø50...68 2xØ68.. .80	
	162/4	162/7	E-2D [1]	1300/750	4x240	2x2xPg36...48 2x1xPg36...42	2x1xØ36...52/Ø48...60 2x2xØ48...60/Ø50...68 2x2xØ68.m. .80	

[1] Terminal box type 162 is used with a combination of one E-opening and one or two D-openings, see pictures below and drawing pages.

Terminal box 162 with adapting flange 3GZF 294730-501 (E-D) or optional 3GZF 294730-301 (E-2D) :

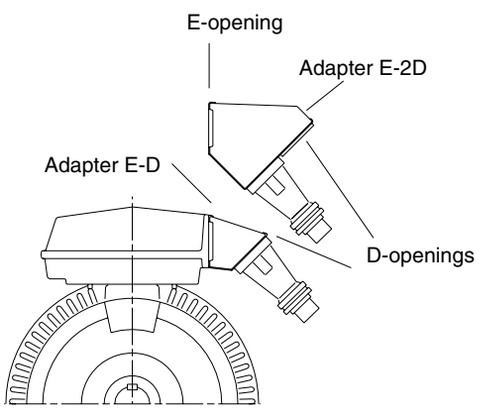

Terminal box 162 with adapting flange:

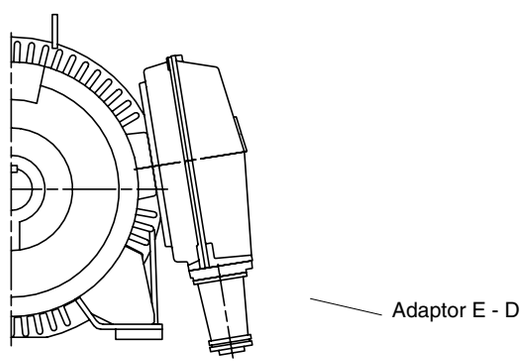

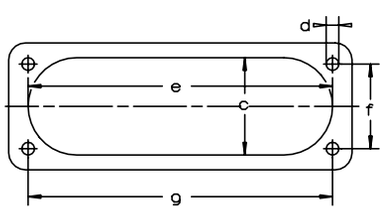

Opening	c	e	f	g	d
C (FL 21)	62	193	62	193	M8
D (FL 33)	100	300	80	292	M10
E (FL 40)	115	370	100	360	M12

Bearings

The motors are normally fitted with single-row deep groove ball bearings as listed in the table below. The complete ball bearing designation is stated on the rating plate.

If the bearing at the D-end is replaced with a roller bearing (NU- or NJ-), higher radial forces can be handled. Roller bearings are suitable for belt drive applications.

When there are high axial forces, angular contact ball bearings should be used. This option is available on request. When a motor with angular contact ball bearings is ordered, the method of mounting and direction and magnitude of the axial force must be specified. For special bearings, please see the variant codes.

Bearing types

Motor size	Number of poles	Standard design Deep groove ball bearings D-end	N-end	Alternative designs Roller bearings variant code 037 D-end
280	2	6316/C4	6316/C4	[1]
	4-12	6316/C3	6316/C3	NU 316/C3
315	2	6316/C4	6316/C4	[1]
	4-12	6319/C3	6316/C3	NU319/C3
355	2	6316M/C4	6316M/C4	[1]
	4-12	6322/C3	6319/C3	NU 322/C3
400	2	6317M/C4	6317M/C4	[1]
	4-12	6322/C3	6319/C3	NU 322/C3

[1] On request

3

Axially-locked bearings

The outer bearing ring at the D-end is axially locked with an inner bearing cover. The inner ring is locked by tight tolerance to the shaft.

All motors are equipped as standard with an axially-locked bearing at the D-end.

Transport locking

Motors that have roller bearings or an angular contact ball bearing are fitted with a transport lock before despatch to prevent damage to the bearings during transport. In case of transport locked bearing, the motor is provided with a warning sign.

Locking may also be fitted in other cases where transport conditions are suspected of being potentially damaging.

Bearing seals

M2CA motors have, as standard, V-rings at both ends. The size and type of suitable seals are in accordance with the table below:

Motor size	Number of poles	d_1	d_2	B_1	b	Standard design Axial seal D-end	N-end	Alternative design Radial seal (DIN 3760) Variant code 072
280	2	80	100	13.5	10	VS 80	VS 80	80x100x10[1)]
	4-12	80	100	13.5	10	VS 80	VS 80	80x100x10
315	2	80	100	13.5	10	VS 80	VS 80	80x100x10[1)]
	4-12	95	120	13.5	12	VS 95	VS 80	95x120x12
355	2	95	120	13.5	12	VS 80	VS 80	80x100x10[1)]
	4-12	110	140	15.5	12	VS 110	VS 95	110x140x12[1)]
400	2	95	120	13.5	12	VS 85	VS 85	85x110x12[1)]
	4-12	110	140	15.5	12	VS 110	VS 95	110x140x12[1)]

[1)] Viton-seal

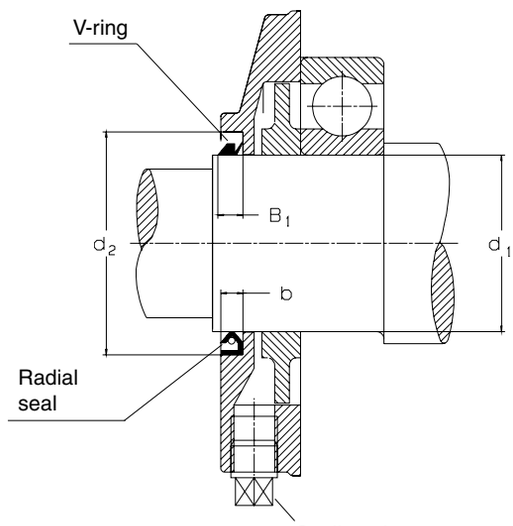

Sealing plugs are not used in standard flange-mounted motors.

Bearing life

The nominal life L_{10} of a bearing is defined according to ISO as the number of operating hours achieved or exceeded by 90% of identical bearings in a large test series under certain specified conditions. 50% of the bearings achieve at least five times this figure.

The calculated bearing life L_{10} for power transmission by means of a coupling (horizontal machine):
Motor sizes M2CA 280 to 400 ≥ 200.000 hours.

Pulley diameter

When the desired bearing life has been determined, the minimum permissible pulley diameter can be calculated using F_R, as follows:

$$D = \frac{1.9 \cdot 10^7 \cdot K \cdot P}{n \cdot F_R}$$

where:
D = diameter of pulley, mm
P = power requirement, kW
n = motor speed, r/min
K = belt tension factor, dependent on belt type and type of duty. A common value for V-belts is 2.5.
F_R = permissible radial force

Permissible loading on shaft

The table below gives the permissible radial and axial forces in Newtons, assuming the occurrence of only radial or axial force. In case of simultaneous radial and axial forces, information can be supplied on request. The values are based on normal conditions at 50 Hz and calculated bearing lives of 40,000 h.

Motors are B3 version with force directed sideways. In some cases the strength of the shaft affects the permissible forces.

At 60 Hz the values must be reduced by 10 %. For two-speed motors, the values must be based on the higher speed. When there are high axial forces, angular contact ball bearings should be used.

Permissible loads of simultaneous radial and axial forces will be supplied on request.

Permissible radial and axial force for a bearing life of 40,000 hours

			Permissible radial force:				**Permissible axial force:**		
			Horizontal mounting, sideways direction of force				Horizontal mounting	Vertical mounting with shaft extension downwards	
		Length of shaft	Ball bearing at point of application:		Roller bearing at point of application:		Direction of force		
Motor	Number	extension	FX_0	FX_{max}	FX_0	X_{max}	Outwards	Upwards	Downwards
size	of poles	E (mm)	N	N	N	N	N	N	N
280	2	140	5800	4800	–	–	3700	7050	2600
	4	140	7300	6100	20000	10500	4000	7650	2800
	6	140	8300	6800	22500	10500	4900	8800	3400
	8	140	9200	7500	24700	10500	5700	9750	4100
315	2	140	5800	4900	–	–	3600	7400	1800
	4	170	8900	7300	26500	10500	4900	9200	2800
	6	170	10300	8500	29800	10500	6150	10700	3300
	8	170	11300	9300	32500	11000	6900	11800	4300
355	2	140	5800	5100	–	–	2400	1)	1)
	4	210	12000	9800	36700	17500	3900	1)	1)
	6	210	13500	11300	41500	17000	5100	1)	1)
	8	210	15000	12500	45200	17500	6350	1)	1)
400	2	170	5800	5100	–	–	6700	1)	1)
	4	210	11800	10200	37300	16700	3450	1)	1)
	6	210	13600	11700	42000	13500	4750	1)	1)
	8	210	15100	12900	45700	16800	5700	1)	1)

1) On request

If the radial force is applied between points X_0 and X_{max}, the permissible force F_R can be calculated from the following formula:

$$F_R = F_{X0} - \frac{X}{E} (F_{X0} - F_{Xmax})$$

E = length of shaft extension in basic version

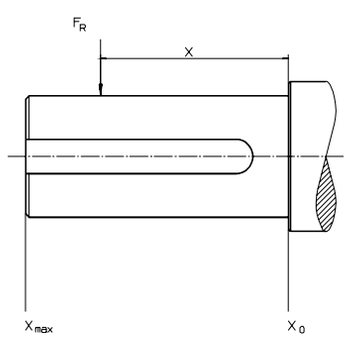

Ordering information

When placing an order, please state the following minimum data in the order, as in the example.

The product code of the motor is composed in accordance with the following example.

Motor type	M2CA 315SMA
Pole number	4
Mounting arrangement (IM-code)	IM B3 (IM 1001)
Rated output	132 kW
Product code	3GCA312210-ADA
Variant codes if needed	

A	B	C	D,E,F, G
M2CA	**315 SMA**	**3GCA 312 210 - ADA, 003 etc.**	

1 - 4	5 - 6	7	8 - 10	11	12	13	14

A Motor type
B Motor size
C Product code
- **D** Mounting arrangement code
- **E** Voltage/frequency code
- **F** Generation code

G Variant code

Explanation of the product code:

Positions 1 to 4
3GCA = Totally enclosed fan cooled squirrel cage motor with steel stator frame

Positions 5 and 6
IEC-size

28 = 280	**35** = 355
31 = 315	**40** = 400

Position 7
Speed (Pole pairs)

1 = 2 poles	**6** =12 poles
2 = 4 poles	**7** = > 12 poles
3 = 6 poles	**8** =Two-speed motors
4 = 8 poles	**9** =Multi-speed motors
5 = 10 poles	

Position 8 to 10
Serial number

Position 11
- (dash)

Position 12
Mounting arrangement
A = Foot-mounted, top-mounted terminal box
R = Foot-mounted, terminal box RHS seen from D-end
L = Foot-mounted, terminal box LHS seen from D-end
B = Flange-mounted, large flange
H = Foot- and flange-mounted, top-mounted terminal box
S = Foot- and flange-mounted, terminal box RHS seen from D-end
T = Foot- and flange-mounted, terminal box LHS seen from D-end

Position 13
Voltage and frequency code
See table below

Position 14
Generation code = A

The product code must be, if needed, followed by variant codes.

Code letters for supplementing the product code for voltage and frequency:

A	B	D	E	F	H
380 VY 50 Hz	380 VΔ 50 Hz	380-420 VΔ 50 Hz 660-690 VY 50 Hz 440-480 VΔ 60 Hz	500 VΔ 50 Hz 575 VΔ 60 Hz	500 VY 50 Hz 575 VY 60 Hz	415 VΔ 50 Hz

S	T	U	X
220-240 VΔ 50 Hz 380-420 VY 50 Hz 440-480 VY 60 Hz	660 VΔ 50 Hz	690 VΔ 50 Hz	Other rated voltage, connection or frequency, max. 690 V

General purpose steel motors

Technical data for totally enclosed squirrel cage three phase motors

IP 55 – IC 411 – Insulation class F, temperature rise class B

Output kW		Motor type		Product code		Speed r/min	Efficiency Full load 100%	Efficiency 3/4 load 75%	Power factor cos φ 100%	Current I_N A	Current I_s / I_N	Torque T_N Nm	Torque T_s / T_N	Torque T_{max} / T_N
3000 r/min = 2-poles						**400 V 50 Hz**					**Basic design**			
75		**M2CA**	**280 SA**	3GCA	281 110-••A	2977	94.9	94.6	0.88	131	7.5	241	2.3	3.30
90		**M2CA**	**280 SMA**	3GCA	281 210-••A	2975	95.1	94.9	0.90	152	7.6	289	2.3	2.90
110		**M2CA**	**315 SA**	3GCA	311 110-••A	2982	95.1	94.4	0.86	194	7.6	352	2.0	3.00
132		**M2CA**	**315 SMA**	3GCA	311 210-••A	2982	95.4	94.9	0.88	228	7.4	423	2.2	3.00
160		**M2CA**	**315 MB**	3GCA	311 320-••A	2981	96.1	95.6	0.89	269	7.5	513	2.3	3.00
200		**M2CA**	**355 SA**	3GCA	351 110-••A	2977	95.5	95.1	0.92	330	6.6	641	1.3	2.80
200	2)	**M2CA**	**315 LA**	3GCA	311 510-••A	2978	96.3	95.9	0.90	334	7.8	641	2.6	3.00
250		**M2CA**	**355 MA**	3GCA	351 310-••A	2980	96.1	95.7	0.92	410	6.6	801	1.3	3.00
280		**M2CA**	**355 MB**	3GCA	351 320-••A	2978	96.1	95.9	0.92	470	5.7	897	1.1	2.70
315		**M2CA**	**355 LA**	3GCA	351 510-••A	2980	96.6	96.4	0.93	510	7.7	1009	1.3	3.30
355		**M2CA**	**355 LB**	3GCA	351 520-••A	2977	96.0	95.9	0.92	575	7.0	1138	1.0	3.10
400		**M2CA**	**400 MLA**	3GCA	401 410-••A	2982	96.6	96.5	0.92	655	7.6	1281	0.8	3.00
450	1)	**M2CA**	**400 MLB**	3GCA	401 420-••A	2980	96.6	96.5	0.92	730	7.4	1442	0.8	3.00
500	1)	**M2CA**	**400 LKA**	3GCA	401 510-••A	2984	96.6	96.5	0.91	815	7.2	1600	0.7	3.40
560	1)	**M2CA**	**400 LKB**	3GCA	401 520-••A	2983	96.7	96.6	0.92	910	7.3	1792	0.7	3.40
3000 r/min = 2-poles						**400 V 50 Hz**					**High-output design**			
110		**M2CA**	**280 MB**	3GCA	281 320-••A	2977	95.8	95.5	0.90	184	7.9	353	2.4	3.0
132		**M2CA**	**280 MC**	3GCA	281 330-••A	2976	96.0	95.7	0.91	222	7.7	424	2.6	3.0
160		**M2CA**	**280 MD**	3GCA	281 340-••A	2975	96.0	95.7	0.91	266	7.9	514	2.8	3.1
250	2)	**M2CA**	**315 LB**	3GCA	311 520-••A	2980	96.5	96.2	0.90	420	8.1	801	2.8	2.9
315	2)	**M2CA**	**315 LC**	3GCA	311 530-••A	2982	96.8	96.6	0.90	528	8.9	1009	3.4	3.1
1500 r/min = 4-poles						**400 V 50 Hz**					**Basic design**			
75		**M2CA**	**280 SA**	3GCA	282 110-••A	1483	95.0	94.9	0.84	137	6.8	483	2.4	2.8
90		**M2CA**	**280 SMA**	3GCA	282 210-••A	1484	95.2	95.1	0.85	163	7.1	579	2.7	2.9
110		**M2CA**	**315 SA**	3GCA	312 110-••A	1487	95.4	95.1	0.85	198	6.9	706	2.1	2.8
132		**M2CA**	**315 SMA**	3GCA	312 210-••A	1486	95.6	95.5	0.85	238	6.7	848	2.2	2.7
160	2)	**M2CA**	**315 MB**	3GCA	312 320-••A	1486	96.0	95.9	0.86	282	7.2	1028	2.4	2.9
200	2)	**M2CA**	**315 LA**	3GCA	312 510-••A	1486	96.2	96.2	0.86	351	7.2	1285	2.5	2.9
200		**M2CA**	**355 SA**	3GCA	352 110-••A	1487	95.8	95.6	0.87	345	7.0	1284	2.1	2.7
250		**M2CA**	**355 MA**	3GCA	352 310-••A	1487	96.5	96.4	0.87	430	7.2	1605	2.3	2.8
315		**M2CA**	**355 LA**	3GCA	352 510-••A	1488	96.5	96.4	0.87	545	7.4	2021	2.4	2.8
355		**M2CA**	**355 LB**	3GCA	352 520-••A	1489	96.5	96.4	0.88	605	7.2	2276	1.4	3.0
400	1)	**M2CA**	**355 LKD**	3GCA	352 540-••A	1489	96.7	96.5	0.88	680	7.5	2565	1.5	3.0
450		**M2CA**	**400 MLA**	3GCA	402 410-••A	1489	96.7	96.6	0.90	740	6.9	2886	1.2	2.8
500		**M2CA**	**400 MLB**	3GCA	402 420-••A	1489	96.8	96.7	0.89	830	7.3	3206	1.3	2.9
560		**M2CA**	**400 LKA**	3GCA	402 510-••A	1489	96.9	96.8	0.90	925	6.6	3591	1.1	2.6
630	1)	**M2CA**	**400 LKB**	3GCA	402 520-••A	1489	96.9	96.8	0.87	1080	6.9	4040	1.2	2.8
1500 r/min = 4-poles						**400 V 50 Hz**					**High-output design**			
110		**M2CA**	**280 MB**	3GCA	282 320-••A	1483	95.3	95.2	0.86	195	7.5	708	2.7	2.8
132		**M2CA**	**280 MC**	3GCA	282 330-••A	1483	95.6	95.5	0.86	235	7.1	850	2.8	2.9
160		**M2CA**	**280 MD**	3GCA	282 340-••A	1483	95.8	95.7	0.86	283	7.1	1030	2.8	3.1
250		**M2CA**	**315 LB**	3GCA	312 520-••A	1487	96.1	96.0	0.85	445	7.4	1605	2.5	2.9
315	2)	**M2CA**	**315 LC**	3GCA	312 530-••A	1487	96.4	96.2	0.85	560	7.8	2023	2.6	3.2

1) Temperature rise class F.
2) Temperature rise class F for 380 V.

The two bullets in the product code indicate choice of mounting arrangement, voltage and frequency (see ordering information page).

General purpose steel motors

Technical data for totally enclosed squirrel cage three phase motors

IP 55 – IC 411 – Insulation class F, temperature rise class B

Output kW		Motor type		Speed r/min	Effi-ciency %	Power factor cos φ 100%	Current I_N A	Speed r/min	Effi-ciency %	Power factor cos φ 100%	Current I_N A	Moment of inertia J = ¼ GD² kgm²	Weight kg	Sound pressure level L_P dB(A)
3000 r/min = 2-poles				**380 V 50 Hz**				**415 V 50 Hz**				**Basic design**		
75		**M2CA**	**280 SA**	2974	94.8	0.89	137	2980	94.8	0.87	127	0.8	480	77
90		**M2CA**	**280 SMA**	2970	95.1	0.90	159	2978	95.1	0.89	147	0.9	545	77
110		**M2CA**	**315 SA**	2980	95.1	0.87	202	2983	0.0	0.85	190	1.2	695	80
132		**M2CA**	**315 SMA**	2980	95.4	0.89	238	2983	95.7	0.87	222	1.4	770	80
160		**M2CA**	**315 MB**	2979	96.1	0.90	282	2982	96.1	0.89	262	1.7	840	80
200		**M2CA**	**355 SA**	2975	95.4	0.92	350	2979	95.5	0.91	325	3.2	1220	83
200		**M2CA**	**315 LA**	2977	96.3	0.90	350	2981	96.3	0.90	321	2.1	975	80
250		**M2CA**	**355 MA**	2978	96.0	0.92	430	2982	96.1	0.92	395	3.8	1320	83
280		**M2CA**	**355 MB**	2975	96.0	0.92	495	2980	96.1	0.92	450	3.8	1320	83
315		**M2CA**	**355 LA**	2976	96.5	0.93	540	2982	96.6	0.92	495	4.8	1530	83
355		**M2CA**	**355 LB**	2972	96.0	0.92	605	2974	96.1	0.92	550	4.8	1550	83
400		**M2CA**	**400 MLA**	2980	96.5	0.92	680	2983	96.5	0.92	630	7.2	2300	85
450	1)	**M2CA**	**400 MLB**	2978	96.6	0.92	770	2982	96.6	0.92	700	7.2	2300	85
500	1)	**M2CA**	**400 LKA**	2982	96.6	0.92	850	2985	96.6	0.91	790	8.5	2700	85
560	1)	**M2CA**	**400 LKB**	2981	96.7	0.92	965	2984	96.8	0.91	885	8.5	2700	85
3000 r/min = 2-poles				**380 V 50 Hz**				**415 V 50 Hz**				**High-output design**		
110		**M2CA**	**280 MB**	2974	95.7	0.91	193	2979	95.8	0.90	179	1.15	580	77
132		**M2CA**	**280 MC**	2972	95.9	0.91	233	2978	96.0	0.90	213	1.4	755	77
160		**M2CA**	**280 MD**	2971	95.9	0.91	280	2977	96.0	0.90	255	1.55	810	77
250	2)	**M2CA**	**315 LB**	2977	96.4	0.90	442	2982	96.5	0.89	404	2.65	1230	80
315	2)	**M2CA**	**315 LC**	2979	96.8	0.90	550	2983	96.8	0.90	508	3.3	1410	80
1500 r/min = 4-poles				**380 V 50 Hz**				**415 V 50 Hz**				**Basic design**		
75		**M2CA**	**280 SA**	1481	94.8	0.86	142	1485	95.0	0.82	134	1.15	445	68
90		**M2CA**	**280 SMA**	1482	95.1	0.86	169	1486	95.2	0.83	159	1.4	490	68
110		**M2CA**	**315 SA**	1486	95.3	0.86	204	1488	95.3	0.83	198	2	675	71
132		**M2CA**	**315 SMA**	1485	95.5	0.86	245	1487	95.5	0.84	232	2.3	730	71
160		**M2CA**	**315 MB**	1485	95.9	0.87	294	1487	96.0	0.85	277	2.9	850	71
200		**M2CA**	**315 LA**	1484	96.1	0.87	365	1487	96.2	0.85	342	3.5	970	71
200		**M2CA**	**355 SA**	1485	95.7	0.87	360	1488	95.8	0.86	340	5.5	1220	80
250		**M2CA**	**355 MA**	1486	96.4	0.87	455	1488	96.5	0.86	420	6.5	1350	80
315		**M2CA**	**355 LA**	1486	96.4	0.87	570	1489	96.5	0.86	530	7.8	1550	80
355		**M2CA**	**355 LB**	1487	96.4	0.89	630	1490	96.5	0.87	590	7.8	1550	80
400	1)	**M2CA**	**355 LKD**	1487	96.6	0.89	710	1490	96.7	0.87	660	10	1900	85
450		**M2CA**	**400 MLA**	1487	96.6	0.90	770	1490	96.7	0.90	720	13	2400	85
500		**M2CA**	**400 MLB**	1488	96.7	0.90	870	1490	96.8	0.89	800	13	2400	85
560		**M2CA**	**400 LKA**	1487	96.8	0.91	965	1490	96.9	0.90	890	14	2700	85
630	1)	**M2CA**	**400 LKB**	1488	96.8	0.88	1125	1490	96.9	0.87	1040	15	2800	85
1500 r/min = 4-poles				**380 V 50 Hz**				**415 V 50 Hz**				**High-output design**		
110		**M2CA**	**280 MB**	1481	95.2	0.87	204	1486	95.5	0.84	193	1.7	550	68
132		**M2CA**	**280 MC**	1481	95.4	0.87	245	1485	95.7	0.85	227	2.3	775	70
160		**M2CA**	**280 MD**	1482	95.6	0.87	295	1485	95.8	0.85	276	2.5	820	70
250		**M2CA**	**315 LB**	1485	95.9	0.86	463	1488	96.2	0.84	434	4.4	1200	78
315	2)	**M2CA**	**315 LC**	1485	96.1	0.86	582	1489	96.4	0.84	548	5.5	1380	78

General purpose steel motors

Technical data for totally enclosed squirrel cage three phase motors

IP 55 – IC 411 – Insulation class F, temperature rise class B

Output kW		Motor type		Product code		Speed r/min	Efficiency Full load 100%	Efficiency 3/4 load 75%	Power factor cos φ 100%	Current I_N A	Current I_s / I_N	Torque T_N Nm	Torque T_s / T_N	Torque T_{max} / T_N
1000 r/min = 6-poles						**400 V 50 Hz**					**Basic design**			
45		**M2CA**	**280 SA**	3GCA	283 110-••A	990	94.1	94.0	0.82	85	6.6	434	2.5	2.5
55		**M2CA**	**280 SMA**	3GCA	283 210-••A	989	94.4	94.3	0.83	102	6.6	531	2.5	2.5
75		**M2CA**	**315 SA**	3GCA	313 110-••A	992	94.9	94.7	0.80	143	7.1	722	2.3	2.7
90		**M2CA**	**315 SMA**	3GCA	313 210-••A	991	95.3	95.2	0.83	165	7.1	867	2.3	2.7
110		**M2CA**	**315 MB**	3GCA	313 320-••A	991	95.3	95.1	0.83	201	7.3	1060	2.5	2.8
132		**M2CA**	**355 SA**	3GCA	353 110-••A	992	95.3	95.1	0.85	235	6.8	1270	1.7	2.6
132		**M2CA**	**315 LA**	3GCA	313 510-••A	990	95.4	95.3	0.84	241	6.7	1273	2.4	2.7
160		**M2CA**	**355 SB**	3GCA	353 120-••A	992	95.9	95.7	0.85	280	6.8	1540	1.8	2.7
200		**M2CA**	**355 MA**	3GCA	353 310-••A	993	95.9	95.7	0.85	350	7.5	1923	2.0	2.8
250	1)	**M2CA**	**355 MB**	3GCA	353 320-••A	991	95.9	95.8	0.80	475	7.3	2409	2.2	3.0
315		**M2CA**	**355 LKD**	3GCA	353 540-••A	991	96.2	96.1	0.84	565	7.3	3035	2.0	3.0
355		**M2CA**	**400 MLA**	3GCA	403 410-••A	992	96.4	96.3	0.85	625	6.4	3417	1.2	2.7
400	1)	**M2CA**	**400 MLB**	3GCA	403 420-••A	992	96.5	96.4	0.85	700	6.4	3850	1.2	2.7
450		**M2CA**	**400 LKA**	3GCA	403 510-••A	993	96.5	96.4	0.85	790	6.8	4327	1.3	2.8
500	1)	**M2CA**	**400 LKB**	3GCA	403 520-••A	992	96.5	96.4	0.85	880	6.8	4813	1.3	2.8
1000 r/min = 6-poles						**400 V 50 Hz**					**High-output design**			
75		**M2CA**	**280 MB**	3GCA	283 320-••A	990	94.5	94.4	0.83	139	7.3	723	2.8	2.7
90		**M2CA**	**280 MC**	3GCA	283 330-••A	989	94.9	94.8	0.83	168	7.4	869	2.9	2.9
110		**M2CA**	**280 MD**	3GCA	283 340-••A	990	95.2	95.1	0.83	202	7.9	1061	3.1	3.0
160	2)	**M2CA**	**315 LB**	3GCA	313 520-••A	991	95.6	95.4	0.83	292	7.7	1542	2.9	3.1
200	2)	**M2CA**	**315 LC**	3GCA	313 530-••A	991	95.8	95.7	0.83	364	7.4	1927	2.8	2.9
750 r/min = 8-poles						**400 V 50 Hz**					**Basic design**			
37		**M2CA**	**280 SA**	3GCA	284 110-••A	741	93.4	93.1	0.78	74	7.3	477	1.8	3.1
45		**M2CA**	**280 SMA**	3GCA	284 210-••A	741	94.0	93.8	0.78	90	7.6	580	1.9	3.2
55		**M2CA**	**315 SA**	3GCA	314 110-••A	741	94.0	93.7	0.80	107	7.1	710	1.8	2.8
75		**M2CA**	**315 SMA**	3GCA	314 210-••A	740	94.5	94.2	0.81	142	7.1	968	1.8	2.8
90		**M2CA**	**315 MB**	3GCA	314 320-••A	740	94.7	94.5	0.82	169	7.3	1161	1.9	2.8
110	2)	**M2CA**	**315 LA**	3GCA	314 510-••A	740	94.8	94.7	0.83	202	7.0	1420	1.9	2.7
110		**M2CA**	**355 SA**	3GCA	354 110-••A	742	94.6	94.0	0.80	215	5.6	1415	1.4	2.2
132		**M2CA**	**355 MA**	3GCA	354 310-••A	743	95.0	94.5	0.77	265	5.8	1696	1.5	2.3
160		**M2CA**	**355 MB**	3GCA	354 320-••A	742	95.2	94.8	0.79	310	6.4	2059	1.8	2.5
200		**M2CA**	**355 LKD**	3GCA	354 540-••A	743	95.5	95.1	0.74	414	6.6	2570	1.8	2.7
250		**M2CA**	**400 MLA**	3GCA	404 410-••A	744	96.0	95.7	0.77	490	7.2	3209	1.6	2.9
315	1)	**M2CA**	**400 LKA**	3GCA	404 510-••A	744	96.2	95.9	0.79	605	6.9	4043	1.5	2.8
750 r/min = 8-poles						**400 V 50 Hz**					**High-output design**			
55		**M2CA**	**280 MB**	3GCA	284 320-••A	741	94.4	94.2	0.79	108	7.8	709	1.9	3.2

1) Temperature rise acc. to class F.
2) Temperature rise acc. to class F by 380 V.

The two bullets in the product code indicate choice of mounting arrangement, voltage and frequency (see ordering information page).

General purpose steel motors

Technical data for totally enclosed squirrel cage three phase motors

IP 55 – IC 411 – Insulation class F, temperature rise class B

Output kW		Motor type		Speed r/min	Effi-ciency %	Power factor cos φ 100%	Current I_N A	Speed r/min	Effi-ciency %	Power factor cos φ 100%	Current I_N A	Moment of inertia J = ¼ GD² kgm²	Weight kg	Sound pressure level L_P dB(A)
1000 r/min = 6-poles				**380 V 50 Hz**				**415 V 50 Hz**				**Basic design**		
45		**M2CA**	**280 SA**	988	94.0	0.83	89	991	94.2	0.81	82	1.65	440	66
55		**M2CA**	**280 SMA**	988	94.3	0.84	106	991	94.4	0.82	99	2	475	66
75		**M2CA**	**315 SA**	991	94.8	0.82	146	993	94.9	0.77	143	2.9	630	72
90		**M2CA**	**315 SMA**	990	95.2	0.84	173	992	95.3	0.82	162	3.8	720	72
110		**M2CA**	**315 MB**	990	95.1	0.84	212	992	95.3	0.82	198	4.5	805	75
132		**M2CA**	**355 SA**	991	95.2	0.86	245	993	95.3	0.84	230	8.7	1200	75
132		**M2CA**	**315 LA**	988	95.3	0.84	252	991	95.5	0.83	234	5.4	910	75
160		**M2CA**	**355 SB**	991	95.8	0.86	295	993	95.9	0.84	275	10	1320	75
200		**M2CA**	**355 MA**	992	95.8	0.86	370	993	95.9	0.84	350	13	1550	75
250	1)	**M2CA**	**355 MB**	990	95.8	0.82	485	992	95.9	0.78	470	13	1550	75
315		**M2CA**	**355 LKD**	990	96.2	0.85	590	992	96.2	0.82	560	15	1900	82
355		**M2CA**	**400 MLA**	991	96.3	0.86	650	993	96.4	0.84	610	17	2400	82
400	1)	**M2CA**	**400 MLB**	991	96.3	0.86	730	992	96.4	0.84	680	17	2400	82
450		**M2CA**	**400 LKA**	992	96.5	0.86	825	993	96.5	0.83	790	19	2700	82
500	1)	**M2CA**	**400 LKB**	991	96.5	0.86	920	993	96.5	0.83	870	19	2700	82
1000 r/min = 6-poles				**380 V 50 Hz**				**415 V 50 Hz**				**High-output design**		
75		**M2CA**	**280 MB**	988	94.5	0.84	144	991	94.5	0.81	137	2.6	545	67
90		**M2CA**	**280 MC**	988	94.8	0.84	174	990	94.9	0.81	164	3.1	815	67
110		**M2CA**	**280 MD**	988	95.1	0.84	210	991	95.2	0.81	200	4.1	835	67
160	2)	**M2CA**	**315 LB**	990	95.5	0.84	304	992	95.6	0.82	287	7.3	1200	80
200	2)	**M2CA**	**315 LC**	989	95.7	0.84	381	992	95.8	0.82	354	9.2	1380	80
750 r/min = 8-poles				**380 V 50 Hz**				**415 V 50 Hz**				**Basic design**		
37		**M2CA**	**280 SA**	740	93.2	0.80	75	742	93.4	0.76	73	1.85	460	65
45		**M2CA**	**280 SMA**	740	93.8	0.80	92	742	94.0	0.75	90	2.2	500	65
55		**M2CA**	**315 SA**	740	93.9	0.82	108	742	94.0	0.78	105	2.9	630	70
75		**M2CA**	**315 SMA**	739	94.3	0.82	148	741	94.3	0.79	138	3.8	715	70
90		**M2CA**	**315 MB**	739	94.6	0.83	175	741	94.6	0.80	165	4.5	800	77
110	2)	**M2CA**	**315 LA**	738	94.7	0.84	213	740	94.8	0.81	198	5.4	900	77
110		**M2CA**	**355 SA**	740	94.5	0.80	220	742	94.7	0.79	205	8.7	1200	75
132		**M2CA**	**355 MA**	742	94.8	0.78	270	744	95.0	0.75	260	10	1350	75
160		**M2CA**	**355 MB**	741	95.1	0.80	320	743	95.2	0.78	300	13	1550	75
200		**M2CA**	**355 LKD**	742	95.5	0.76	423	744	95.5	0.72	410	15	1900	80
250		**M2CA**	**400 MLA**	743	96.0	0.79	500	745	96.0	0.75	480	17	2400	80
315	1)	**M2CA**	**400 LKA**	743	96.1	0.80	620	745	96.2	0.76	600	19	2700	80
750 r/min = 8-poles				**380 V 50 Hz**				**415 V 50 Hz**				**High-output design**		
55		**M2CA**	**280 MB**	740	94.2	0.81	110	742	94.4	0.77	106	2.85	575	65

General purpose steel motors

Technical data for totally enclosed squirrel cage three phase motors, two-speed

IP 55 – IC 411 – Insulation class F, temperature rise class F

Output kW	Motor type		Product code	Speed r/min	Effi-ciency %	Power factor cos φ	Current I_N A	Current I_s/I_N	Torque T_N Nm	Torque T_s/T_N	Torque T_{max}/T_N	Moment of inertia J = ¼ GD² kgm²	Weight kg
1500/1000 r/min = 4/6 poles				**400 V 50 Hz**								**Fan drive, two separate windings**	
60/18.5	**M2CA**	**280 SA**	3GCA 288 114-••A	1487/991	93.5/88.0	0.82/0.76	113/40	7.7/7.4	385/178	2.3/2.9	3.0/2.6	1.15	445
77/25	**M2CA**	**280 SMA**	3GCA 288 214-••A	1486/991	93.9/89.3	0.83/0.76	144/54	7.6/7.7	495/241	2.4/3.2	2.9/2.7	1.4	490
90/28	**M2CA**	**280 MB**	3GCA 288 324-••A	1485/991	94.2/89.8	0.86/0.78	161/58	7.4/7.7	579/270	2.3/3.2	2.7/2.8	1.7	550
110/32	**M2CA**	**315 SMA**	3GCA 318 214-••A	1489/992	95.2/91.2	0.85/0.78	199/67	6.6/6.5	706/308	1.9/2.8	2.6/2.9	2.3	730
125/37	**M2CA**	**315 MB**	3GCA 318 324-••A	1488/992	95.5/92.2	0.86/0.79	219/75	6.6/6.4	802/356	1.9/2.9	2.4/2.8	2.9	850
150/44	**M2CA**	**315 LA**	3GCA 318 514-••A	1488/991	95.7/92.6	0.87/0.79	260/88	6.6/6.4	963/424	1.9/3.0	2.4/2.7	3.5	970
180/55	**M2CA**	**355 MA**	3GCA 358 314-••A	1483/986	95.0/91.2	0.90/0.85	300/100	5.3/5.0	1159/532	1.1/1.3	2.3/2.2	6.5	1350
260/85	**M2CA**	**355 LA**	3GCA 358 514-••A	1487/988	95.7/92.0	0.90/0.85	435/155	7.7/5.9	1670/821	1.7/1.6	3.2/2.4	7.8	1550
1500/750 r/min = 4 - 8 poles				**400 V 50 Hz**								**Fan drive, Dahlander-connection**	
65/15	**M2CA**	**280 SA**	3GCA 288 119-••A	1484/743	93.2/90.0	0.84/0.63	121/38	7.5/5.3	418/193	2.7/2.8	2.9/2.3	1.15	445
80/20	**M2CA**	**280 SMA**	3GCA 288 219-••A	1486/743	93.8/91.5	0.83/0.63	150/50	8.5/5.4	514/257	3.3/2.9	3.4/2.6	1.4	490
90/23	**M2CA**	**280 MB**	3GCA 288 329-••A	1486/742	94.1/91.8	0.85/0.64	164/56	8.8/5.4	578/296	3.6/2.8	3.5/2.6	1.7	550
110/22	**M2CA**	**315 SMA**	3GCA 318 219-••A	1487/744	94.6/92.5	0.85/0.62	197/56	6.8/4.9	706/282	1.9/2.1	2.6/2.5	2.3	730
132/26	**M2CA**	**315 MB**	3GCA 318 329-••A	1486/746	94.9/93.0	0.86/0.64	235/65	6.8/4.8	848/334	2.0/2.0	2.6/2.4	2.9	850
160/32	**M2CA**	**315 LA**	3GCA 318 519-••A	1486/743	95.2/93.4	0.86/0.64	283/80	7.0/4.8	1028/411	2.1/2.1	2.7/2.5	3.5	970
200/40	**M2CA**	**355 MA**	3GCA 358 319-••A	1489/745	95.3/93.7	0.90/0.68	340/90	6.8/4.8	1282/512	1.4/1.3	2.8/2.5	6.5	1350
250/50	**M2CA**	**355 LA**	3GCA 358 519-••A	1490/745	95.5/94.0	0.87/0.64	435/120	7.5/5.1	1602/641	1.5/1.4	3.2/2.6	7.8	1550
1500/1000 r/min = 4/6 poles				**400 V 50 Hz**								**Constant torque, two separate windings**	
50/32	**M2CA**	**280 SA**	3GCA 289 114-••A	1486/987	92.0/90.5	0.84/0.78	94/65	6.9/6.2	321/310	2.0/2.5	2.6/2.2	1.15	445
60/40	**M2CA**	**280 SMA**	3GCA 289 214-••A	1486/987	92.6/91.8	0.85/0.78	111/82	7.1/6.6	386/387	2.1/2.8	2.7/2.3	1.4	490
70/47	**M2CA**	**280 MB**	3GCA 289 324-••A	1488/989	93.2/92.6	0.84/0.77	131/96	8.0/7.4	450/454	2.6/3.4	3.1/2.5	1.7	550
90/60	**M2CA**	**315 SMA**	3GCA 319 214-••A	1488/990	94.3/93.5	0.86/0.77	161/121	5.9/5.8	577/579	1.5/2.6	2.3/2.4	2.3	730
110/75	**M2CA**	**315 MB**	3GCA 319 324-••A	1490/989	94.9/93.9	0.86/0.79	195/147	6.8/5.6	705/724	1.9/2.7	2.6/2.3	2.9	850
132/90	**M2CA**	**315 LA**	3GCA 319 514-••A	1489/990	95.1/94.1	0.85/0.76	238/181	6.7/6.0	847/868	1.9/3.1	2.7/2.7	3.5	970
160/110	**M2CA**	**315 LB**	3GCA 319 524-••A	1491/990	95.3/94.5	0.85/0.79	287/213	7.2/5.8	1025/1061	2.1/2.8	2.7/2.3	3.9	1000
180/120	**M2CA**	**355 MA**	3GCA 359 314-••A	1488/990	95.0/94.3	0.89/0.80	305/230	7.2/7.3	1155/1157	1.4/2.0	3.1/3.1	6.5	1350
230/150	**M2CA**	**355 LA**	3GCA 359 514-••A	1489/990	95.3/94.5	0.89/0.82	395/280	7.7/6.9	1475/1447	1.5/2.0	3.2/2.9	7.8	1550
1500/750 r/min = 4 - 8 poles				**400 V 50 Hz**								**Constant torque, Dahlander-connection**	
50/32	**M2CA**	**280 SA**	3GCA 289 119-••A	1486/743	92.7/91.8	0.88/0.70	89/72	7.2/6.9	321/411	1.9/2.7	2.6/2.5	1.85	460
65/40	**M2CA**	**280 SMA**	3GCA 289 219-••A	1486/743	93.1/92.0	0.88/0.69	115/92	7.7/7.2	418/514	2.1/3.1	2.7/2.7	2.2	500
85/50	**M2CA**	**280 MB**	3GCA 289 329-••A	1487/743	93.8/92.8	0.88/0.68	149/115	8.5/7.7	546/643	2.5/3.4	2.9/2.9	2.85	575
100/65	**M2CA**	**315 SMA**	3GCA 319 219-••A	1487/742	94.2/93.8	0.89/0.74	174/137	6.5/6.3	642/836	1.5/2.1	2.6/2.5	4.1	755
120/75	**M2CA**	**315 MB**	3GCA 319 329-••A	1486/742	94.5/94.1	0.90/0.74	204/155	7.0/6.5	739/965	1.7/2.2	2.6/2.6	4.9	845
150/95	**M2CA**	**315 LA**	3GCA 319 519-••A	1486/742	94.7/94.2	0.89/0.72	262/204	7.2/6.5	964/1223	2.0/2.4	2.8/2.6	5.8	950
150/100	**M2CA**	**355 MA**	3GCA 359 319-••A	1487/741	94.7/94.3	0.90/0.72	255/210	5.6/4.4	963/1288	1.2/1.2	2.5/2.2	6.5	1350
180/130	**M2CA**	**355 LA**	3GCA 359 519-••A	1488/742	95.2/94.6	0.90/0.72	305/275	6.6/4.5	1155/1673	1.4/1.3	2.8/2.2	7.8	1550

The two bullets in the product code indicate choice of mounting arrangement, voltage and frequency (see ordering information page).

General purpose steel motors - Variant codes

Code [1]	Variant	Motor size 280	315	355	400
	Balancing				
052	Vibration acc. to Grade A (IEC 60034-14).	P	P	P	P
417	Vibration acc. to Grade B (IEC 60034-14).	P	P	P	P
423	Balanced without key.	R	R	R	R
424	Full key balancing.	P	P	P	P
	Bearings and lubrication				
036	Transport lock for bearings.	M	M	M	M
037	Roller bearing at D-end.	M	M	M	R
039	Cold resistant grease. For bearing temperatures -55 - +100°C.	M	M	M	M
040	Heat resistant grease (-25°... +150°C).	M	M	M	M
043	SPM-nipples.	M	M	M	M
058	Angular contact bearing at D-end, shaft force away from bearing.	P	P	P	P
060	Angular contact bearing at D-end, shaft force towards bearing.	P	P	P	P
107	Bearing mounted PT100 resistance elements.	P	P	P	P
420	Bearing mounted PTC thermistors.	P	P	P	P
796	Grease nipples JIS B 1575 PT 1/8 Type A. Stainless steel.	M	M	M	M
	Branch standard designs				
071	Cooling tower duty. Only motors with shaft extensions downwards.	R	R	R	R
142	”Manilla”-winding connection, (440 VD series, 220 VD parallel, 60 Hz).	P	P	P	P
178	Stainless steel/acid proof bolts.	P	P	P	P
209	Non-standard voltage or frequency (special winding).	P	P	P	P
425	Corrosion protected stator and rotor core.	P	P	P	P
	Cooling system				
044	Unidirectional fan, clockwise seen from D-end.	P	P	P	P
045	Unidirectional fan, counter clockwise seen from D-end.	P	P	P	P
068	Metal fan.	M	M	M	M
075	Cooling method IC 418 (without fan).	P	P	P	P
	Coupling				
035	Assembly of customer supplied coupling-half (finish bored and balanced).	M	M	M	M
	Dimension drawing				
141	Binding dimension drawing.	M	M	M	M
	Drain holes				
065	Plugged drain holes.	M	M	M	M
066	Modified drain hole position (for specified IM xxxx).	M	M	M	M
	Earthing bolt				
067	External earthing bolt.	M	M	M	M

[1] Certain variant codes cannot be used simultaneously.

S = Included as standard
M = On modification of a stocked motor, or on new manufacture, the number per order may be limited.
P = New manufacture only.
R = On request.
NA = Not applicable

Code [1]	Variant	Motor size 280	315	355	400
	Heating elements				
	Motor size / **Element capacity:** 280 / 50 W 315 / 65 W 355-400 / 2 x 65 W				
450	Heating element, 100-120 V.	P	P	P	P
451	Heating element, 200-240 V.	M	M	M	M
	Mounting arrangements				
009	IM 2001 foot/flange mounted, IEC flange, from IM 1001 (B35 from B3).	M	M	M	M
	Painting				
114	Special paint colour, standard grade.	M	M	M	M
179	Special paint specification.	P	P	P	P
	Protection				
005	Protective roof, vertical motor, shaft down.	M	M	M	M
072	Radial seal at D-end.	M	M	M	M
073	Sealed against oil at D-end.	P	P	P	P
158	Degree of protection IP 65. Dust proof version.	M	M	M	M
403	Degree of protection IP 56.	M	M	M	M
	Rating & instruction plates				
002	Restamping voltage, frequency and output, continuous duty.	M	M	M	M
095	Restamping output (maintained voltage, frequency), intermittent duty.	M	M	M	M
135	Mounting of additional identification plate, stainless.	M	M	M	M
138	Mounting of additional identification plate, aluminum.	M	M	M	M
161	Additional rating plate delivered loose.	M	M	M	M
	Shaft & rotor				
069	Two shaft extensions as per basic catalogue. Standard shaft material.	P	P	P	P
070	One or two special shaft extensions, standard shaft material.	P	P	P	P
410	Stainless/acid-proof steel shaft (standard or non-standard design). One or two extensions.				
	Standards and regulations				
010	Fulfilling CSA requirements.	P	P	P	P
011	Fulfilling CSA Energy Efficiency Verification (010 included).	R	R	R	R
	Stator winding temperature sensors				
121	Bimetal detectors, break type (NCC), (3 in series), 130°C, in stator winding.	M	M	M	M
122	Bimetal detectors, break type (NCC), (3 in series), 150°C, in stator winding.	M	M	M	M
123	Bimetal detectors, break type (NCC), (3 in series), 170°C, in stator winding.	M	M	M	M
125	Bimetal detectors, break type (NCC), (2x3 in series), 150°C, in stator winding.	M	M	M	M
127	Bimetal detectors, break type (NCC), (3 in series, 130°C & 3 in series, 150°C), in stator winding.				
435	PTC - thermistors (3 in series), 130°C, in stator winding.	M	M	M	M
436	PTC - thermistors (3 in series), 150°C, in stator winding.	S	S	S	S
437	PTC - thermistors (3 in series), 170°C, in stator winding.	M	M	M	M
439	PTC - thermistors (2x3 in series), 150°C, in stator winding.	M	M	M	M

[1] Certain variant codes cannot be used simultaneously.

S = Included as standard
M = On modification of a stocked motor, or on new manufacture, the number per order may be limited.
P = New manufacture only.
R = On request.
NA = Not applicable

Code [1]	Variant	Motor size 280	315	355	400
440	PTC - thermistors (3 in series, 110°C & 3 in series, 130°C), in stator winding.	R	R	R	R
441	PTC - thermistors (3 in series 130°C & 3 in series 150°C), in stator winding.	M	M	M	M
442	PTC - thermistors (3 in series 150°C & 3 in series 170°C), in stator winding.	M	M	M	M
446	PT100 resistance elements (2 per phase) in stator winding.	M	M	M	M
446	PT100 resistance elements (2 per phase) in stator winding.	M	M	M	M
	Terminal box				
015	Motor supplied in D-connection.	M	M	M	M
017	Motor supplied in Y-connection.	M	M	M	M
019	Larger than standard terminal box.	R	R	R	R
136	Extended cable connection, standard terminal box.	R	R	R	R
137	Extended cable connection, low terminal box.	P	P	R	R
157	Terminal box degree of protection IP 65.	M	M	M	M
187	Cable glands of non-standard design.	R	R	R	R
413	Extended cable connection, no terminal box.	P	P	P	R
414	Smaller than standard terminal box.	P	P	P	P
418	Separate terminal box for temperature detectors.	P	P	P	P
468	Non-standard cable entry direction (please state direction).	M	M	M	M
469	Axial cable entry direction, terminal box 4x90° turnable.	P	P	P	P
	Testing				
145	Type test report from catalogue motor, 400 V 50 Hz.	M	M	M	M
146	Type test with report for motor from specific delivery batch.	P	P	P	P
147	Type test with report for motor from specific delivery batch, customer witnessed.	P	P	P	P
148	Routine test report.	M	M	M	M
149	Testing according to separate test specification.	R	R	R	R
221	Type test and multi-point load test with report for motor from specific delivery batch.	R	R	R	R
222	Torque/speed curve, type test and multi-point load test with report for motor from specific delivery batch.	P	P	P	P
760	Vibration level test.	P	P	P	P
761	Vibration spectrum test.	P	P	P	P
762	Noise level test.	P	P	P	P
763	Noise spectrum test.	P	P	P	P
	Y/D-starting				
117	Terminals for Y/D start at both speeds (two speed windings).	P	P	P	P
118	Terminals for Y/D start at high speed (two speed windings).	P	P	P	P
119	Terminals for Y/D start at low speed (two speed windings).	P	P	P	P

[1] Certain variant codes cannot be used simultaneously.

S = Included as standard
M = On modification of a stocked motor, or on new manufacture, the number per order may be limited.
P = New manufacture only.
R = On request.
NA = Not applicable

General purpose steel motors Sizes 280-315

Dimension drawings

Foot-mounted; IM B3 (IM 1001), IM B6 (IM 1051), IM B7 (IM 1061), IM B8 (IM 1071), IM V5 (IM 1011), IM V6 (IM 1031) – terminal box top mounted

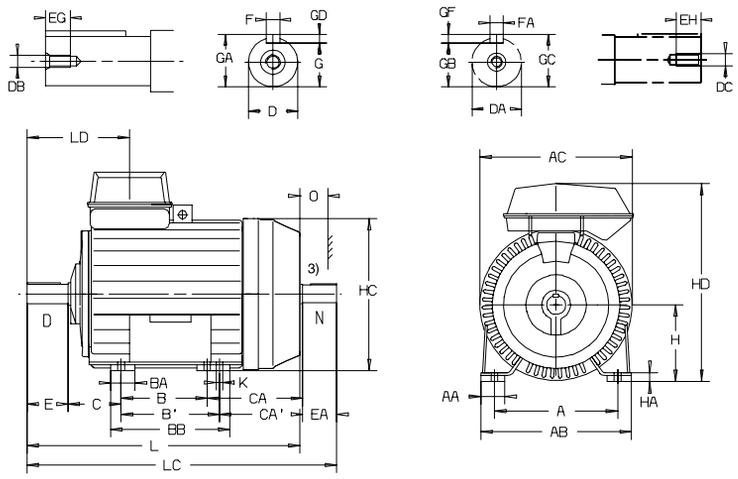

Motor size	Poles [1]	A	AA	AB	AC	B	B'	BA	BB	C	CA	CA'	D	DA	DB	DC	E	EA	EG	EH
280 SA	2	457	80	545	555	368	–	100	501	190	372	–	65	60	M20	M20	140	140	40	40
	4-8	457	80	545	555	368	–	100	450	190	302	–	75	65	M20	M20	140	140	40	40
280 SMA	2	457	80	545	555	368	419	100	501	190	372	321	65	60	M20	M20	140	140	40	40
	4-8	457	80	545	555	368	419	100	501	190	372	321	75	65	M20	M20	140	140	40	40
280 MB	2	457	80	545	555	419	–	100	501	190	381	–	65	60	M20	M20	140	140	40	40
	4-8	457	80	545	555	419	–	100	501	190	381	–	75	65	M20	M20	140	140	40	40
280 MC,MD	2	457	80	545	555	419	–	100	501	190	381	–	65	60	M20	M20	140	140	40	40
	4-8	457	80	545	555	419	–	100	501	190	381	–	75	65	M20	M20	140	140	40	40
315 SA	2	508	100	622	624	406	–	100	539	216	343	–	65	60	M20	M20	140	140	40	40
	4-8	508	100	622	624	406	–	100	539	216	343	–	80	75	M20	M20	170	140	40	40
315 SMA	2	508	100	622	624	406	457	100	539	216	443	392	65	60	M20	M20	140	140	40	40
	4-8	508	100	622	624	406	457	100	539	216	343	292	80	75	M20	M20	170	140	40	40
315 MB	2	508	100	622	624	457	–	100	539	216	392	–	65	60	M20	M20	140	140	40	40
	4-8	508	100	622	624	457	–	100	539	216	392	–	80	75	M20	M20	170	140	40	40
315 LA	2	508	100	622	624	508	–	100	592	216	411	–	65	60	M20	M20	140	140	40	40
	4-8	508	100	622	624	508	–	100	592	216	411	–	90	75	M24	M20	170	140	48	40
315 LB,LC	2	508	100	622	624	508	–	100	592	216	411	–	65	60	M20	M20	140	140	40	40
	4-8	508	100	622	624	508	–	100	592	216	411	–	90	75	M24	M20	170	140	48	40

Motor size	Poles [1]	F	FA	G	GA	GB	GC	GD	GF	H	HA	HC	HD	K	L	LC	LD	O
280 SA	2	18	18	58	69	53	64	11	11	280	32	558	730	24	1060	1210	385	100
	4-8	20	18	67.5	79.5	58	69	12	11	280	32	558	730	24	990	1140	385	100
280 SMA	2	18	18	58	69	53	64	11	11	280	32	558	730	24	1060	1210	385	100
	4-8	20	18	67.5	79.5	58	69	12	11	280	32	558	730	24	1060	1210	385	100
280 MB	2	18	18	58	69	53	64	11	11	280	32	558	730	24	1120	1270	385	100
	4-8	20	18	67.5	79.5	58	69	12	11	280	32	558	730	24	1120	1270	385	100
280 MC	2	18	18	58	69	53	64	11	11	280	32	555	730	24	1255	1405	385	100
	4-8	20	18	67.5	79.5	58	69	12	11	280	32	558	730	24	1255	1405	385	100
280 MD	2	18	18	58	69	53	64	11	11	280	32	558	730	24	1255	1405	385	100
	4-8	20	18	67.5	79.5	58	69	12	11	280	32	558	730	24	1255	1405	385	100
315 SA	2	18	18	58	69	53	64	11	11	315	32	627	820	28	1095	1245	390	115
	4-8	22	20	71	85	67.5	79.5	14	12	315	32	627	820	28	1125	1275	420	115
315 SMA	2	18	18	58	69	53	64	11	11	315	32	627	820	28	1195	1345	390	115
	4-8	22	20	71	85	67.5	79.5	14	12	315	32	627	820	28	1125	1275	420	115
315 MB	2	18	18	58	69	53	64	11	11	315	32	627	820	28	1195	1345	390	115
	4-8	22	20	71	85	67.5	79.5	14	12	315	32	627	820	28	1225	1375	420	115
315 LA	2	18	18	58	69	53	64	11	11	315	32	627	820	28	1265	1415	390	115
	4-8	25	20	81	95	67.5	79.5	14	12	315	32	627	820	28	1295	1445	420	115
315 LB	2	18	18	58	69	53	64	11	11	315	32	627	820	28	1545	1695	390	115
	4-8	25	20	81	95	67.5	79.5	14	12	315	32	627	820	28	1575	1725	420	115
315 LC	2	18	18	58	69	53	64	11	11	315	32	627	848	28	1545	1695	390	115
	4	25	20	81	95	67.5	79.5	14	12	315	32	627	848	28	1575	1725	420	115
	6	25	20	81	95	67.5	79.5	14	12	315	32	627	820	28	1575	1725	420	115

Tolerances:

A, B	ISO js14	H	ISO 0, -1.0
D,DA	ISO m6		
F, FA	ISO h9		

[1] Dimensions for 4-pole motors also valid for 4/6- and 4-8 -pole two-speed motors.
[2] Cooling distance.
[3] Second shaft end on request.

Above dimensions are in mm.
For detailed drawings please see our web-pages 'www.abb.com/motors&drives' or contact us.

Dimension drawings

Foot-mounted; IM B3 (IM 1001), IM B6 (IM 1051), IM B7 (IM 1061), IM B8 (IM 1071), IM V5 (IM 1011), IM V6 (IM 1031) – terminal box side mounted

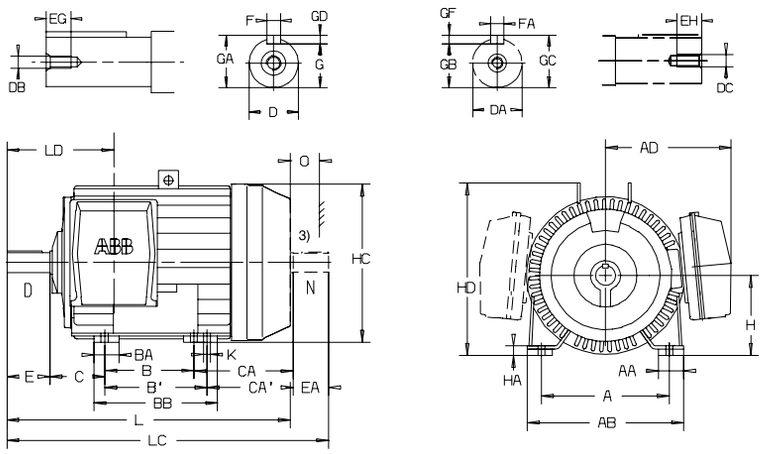

Motor size	Poles [1]	A	AA	AB	AD	B	B'	BA	BB	C	CA	CA'	D	DA	DB	DC	E	EA	EG	EH
280 SA	2	457	80	545	448	368	–	100	501	190	372	–	65	60	M20	M20	140	140	40	40
	4-8	457	80	545	448	368	–	100	450	190	302	–	75	65	M20	M20	140	140	40	40
280 SMA	2	457	80	545	448	368	419	100	501	190	372	321	65	60	M20	M20	140	140	40	40
	4-8	457	80	545	448	368	419	100	501	190	372	321	75	65	M20	M20	140	140	40	40
280 MB	2	457	80	545	448	419	–	100	501	190	381	–	65	60	M20	M20	140	140	40	40
	4-8	457	80	545	448	419	–	100	501	190	381	–	75	65	M20	M20	140	140	40	40
280 MC,MD	2	457	80	545	448	419	–	100	501	190	381	–	65	60	M20	M20	140	140	40	40
	4-8	457	80	545	448	419	–	100	501	190	381	–	75	65	M20	M20	140	140	40	40
315 SA	2	508	100	622	502	406	–	100	539	216	343	–	65	60	M20	M20	140	140	40	40
	4-8	508	100	622	502	406	–	100	539	216	343	–	80	75	M20	M20	170	140	40	40
315 SMA	2	508	100	622	502	406	457	100	539	216	443	392	65	60	M20	M20	140	140	40	40
	4-8	508	100	622	502	406	457	100	539	216	343	292	80	75	M20	M20	170	140	40	40
315 MB	2	508	100	622	502	457	–	100	539	216	392	–	65	60	M20	M20	140	140	40	40
	4-8	508	100	622	502	457	–	100	539	216	392	–	80	75	M20	M20	170	140	40	40
315 LA	2	508	100	622	502	508	–	100	592	216	411	–	65	60	M20	M20	140	140	40	40
	4-8	508	100	622	502	508	–	100	592	216	411	–	90	75	M24	M20	170	140	48	40
315 LB,LC	2	508	100	622	502	508	–	100	592	216	411	–	65	60	M20	M20	140	140	40	40
	4-8	508	100	622	502	508	–	100	592	216	411	–	90	75	M24	M20	170	140	48	40

Motor size	Poles [1]	F	FA	G	GA	GB	GC	GD	GF	H	HA	HC	HD	K	L	LC	LD	O
280 SA	2	18	18	58	69	53	64	11	11	280	32	558	620	24	1060	1210	385	100
	4-8	20	18	67.5	79.5	58	69	12	11	280	32	558	620	24	990	1140	385	100
280 SMA	2	18	18	58	69	53	64	11	11	280	32	558	620	24	1060	1210	385	100
	4-8	20	18	67.5	79.5	58	69	12	11	280	32	558	620	24	1060	1210	385	100
280 MB	2	18	18	58	69	53	64	11	11	280	32	558	620	24	1120	1270	385	100
	4-8	20	18	67.5	79.5	58	69	12	11	280	32	558	620	24	1120	1270	385	100
280 MC	2	18	18	58	69	53	64	11	11	280	32	558	620	24	1255	1405	385	100
	4-8	20	18	67.5	79.5	58	69	12	11	280	32	558	620	24	1255	1405	385	100
280 MD	2	18	18	58	69	53	64	11	11	280	32	558	620	24	1255	1405	385	100
	4-8	20	18	67.5	79.5	58	69	12	11	280	32	558	620	24	1255	1405	385	100
315 SA	2	18	18	58	69	53	64	11	11	315	32	627	685	28	1095	1245	390	115
	4-8	22	20	71	85	67.5	79.5	14	12	315	32	627	685	28	1125	1275	420	115
315 SMA	2	18	18	58	69	53	64	11	11	315	32	627	685	28	1195	1345	390	115
	4-8	22	20	71	85	67.5	79.5	14	12	315	32	627	685	28	1125	1275	420	115
315 MB	2	18	18	58	69	53	64	11	11	315	32	627	685	28	1195	1345	390	115
	4-8	22	20	71	85	67.5	79.5	14	12	315	32	627	685	28	1225	1375	420	115
315 LA	2	18	18	58	69	53	64	11	11	315	32	627	685	28	1265	1415	390	115
	4-8	25	20	81	95	67.5	79.5	14	12	315	32	627	685	28	1295	1445	420	115
315 LB,LC	2	18	18	58	69	53	64	11	11	315	32	627	685	28	1545	1695	390	115
	4-8	25	20	81	95	67.5	79.5	14	12	315	32	627	685	28	1575	1575	420	115

Tolerances:

A, B	ISO js14	H	ISO 0, -1.0
D,DA	ISO m6		
F, FA	ISO h9		

[1] Dimensions for 4-pole motors also valid for 4/6- and 4-8 -pole two-speed motors.
[2] Cooling distance.
[3] Second shaft end on request.

Above dimensions are in mm.
For detailed drawings please see our web-pages 'www.abb.com/motors&drives' or contact us.

General purpose steel motors Sizes 355-400

Dimension drawings

Foot-mounted; IM B3 (IM 1001), IM B6 (IM 1051), IM B7 (IM 1061), IM B8 (IM 1071), IM V5 (IM 1011), IM V6 (IM 1031) – terminal box top mounted

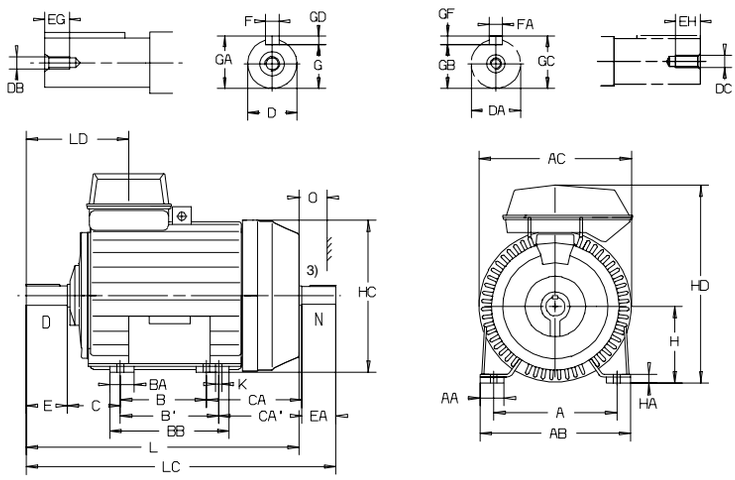

Motor size	Poles 1)	A	AA	AB	AC	B	B'	BA	BB	C	CA	CA'	D	DA	DB	DC	E	EA	EG	EH
355 SA,SB	2	610	110	714	720	500	–	100	584	254	416	–	70	70	M20	M20	140	140	40	40
	4-8	610	110	714	720	500	–	100	584	254	416	–	100	90	M24	M20	210	170	48	48
355 MA	2	610	110	714	720	560	–	100	644	254	416	–	70	70	M20	M20	140	140	40	40
	4-8	610	110	714	720	560	–	100	644	254	416	–	100	90	M24	M24	210	170	48	48
355 MB	2	610	110	714	720	560	–	100	644	254	416	–	70	70	M20	M20	140	140	40	40
	4-8	610	110	714	720	560	–	100	644	254	416	–	100	90	M24	M24	210	170	48	48
355 LA	2	610	110	714	720	630	–	100	714	254	426	–	70	70	M20	M20	140	140	40	40
	4-8	610	110	714	720	630	–	100	714	254	426	–	100	90	M24	M24	210	170	48	48
355 LB	2	610	110	714	720	630	–	100	714	254	426	–	70	70	M20	M20	140	140	40	40
	4-8	610	110	714	720	630	–	100	714	254	426	–	100	90	M24	M24	210	170	48	48
355 LKD	4-8	610	110	714	720	630	710	100	802	254	583	503	100	90	M24	M24	210	170	48	48
400 MLA	2	686	140	820	810	630	710	140	850	280	583	503	70	70	M20	M20	140	140	40	40
	4-8	686	140	820	810	630	710	140	850	280	583	503	100	90	M24	M24	210	170	48	48
400 MLB	2	686	140	820	810	630	710	140	850	280	583	503	70	70	M20	M20	140	140	40	40
	4-8	686	140	820	810	630	710	140	850	280	583	503	100	90	M24	M24	210	170	48	48
400 LKA	2	686	140	820	810	710	800	140	935	280	643	553	80	75	M20	M20	170	140	40	40
	4-8	686	140	820	810	710	800	140	935	280	643	553	100	90	M24	M24	210	170	48	48
400 LKB	2	686	140	820	810	710	800	140	935	280	643	553	80	75	M20	M20	170	140	40	40
	4-8	686	140	820	810	710	800	140	935	280	643	553	100	90	M24	M24	210	170	48	48

Motor size	Poles 1)	F	FA	G	GA	GB	GC	GD	GF	H	HA	HC	HD	K	L	LC	LD	O 2)
355 SA,SB	2	20	20	62.5	74.5	62.5	74.5	12	12	355	36	715	920	28	1310	1460	392	130
	4-8	28	25	90	106	81	95	16	14	355	36	715	920	28	1380	1560	462	130
355 MA	2	20	20	62.5	74.5	62.5	74.5	12	12	355	36	715	920	28	1370	1520	392	130
	4-8	28	25	90	106	81	95	16	14	355	36	715	920	28	1440	1620	462	130
355 MB	2	20	20	62.5	74.5	62.5	74.5	12	12	355	36	715	920	28	1370	1520	392	130
	4-8	28	25	90	106	81	95	16	14	355	36	715	920	28	1440	1620	462	130
355 LA	2	20	20	62.5	74.5	62.5	74.5	12	12	355	36	715	920	28	1450	1600	392	130
	4-8	28	25	90	106	81	95	16	14	355	36	715	920	28	1520	1700	462	130
355 LB	2	20	20	62.5	74.5	62.5	74.5	12	12	355	36	715	920	28	1450	1600	392	130
	4-8	28	25	90	106	81	95	16	14	355	36	715	920	28	1520	1700	462	130
355 LKD	4-8	28	25	90	106	91	95	16	14	355	36	715	920	28	1660	1847	462	130
400 MLA	2	20	20	62.5	74.5	62.5	74.5	12	12	400	45	805	1003	35	1616	1773	408	150
	4-8	28	25	90	106	81	95	16	14	400	45	805	1003	35	1686	1873	478	150
400 MLB	2	20	20	62.5	74.5	62.5	74.5	12	12	400	45	805	1003	35	1616	1773	408	150
	4-8	28	25	90	106	81	95	16	14	400	45	805	1003	35	1686	1873	478	150
400 LKA	2	22	20	71	85	67.5	79.5	14	12	400	45	805	1003	35	1786	1943	438	150
	4-8	28	25	90	106	81	95	16	14	400	45	805	1003	35	1826	2013	478	150
400 LKB	2	22	20	71	85	67.5	79.5	14	12	400	45	805	1003	35	1786	1943	438	150
	4-8	28	25	90	106	81	95	16	14	400	45	805	1003	35	1826	2013	478	150

Tolerances:

A, B	ISO js14	H	ISO 0, -1.0
D,DA	ISO m6		
F, FA	ISO h9		

1) Dimensions for 4-pole motors also valid for 4/6- and 4-8 -pole two-speed motors.
2) Cooling distance.
3) Second shaft end on request.

Above dimensions are in mm.
For detailed drawings please see our web-pages 'www.abb.com/motors&drives' or contact us.

Dimension drawings

Foot-mounted; IM B3 (IM 1001), IM B6 (IM 1051), IM B7 (IM 1061), IM B8 (IM 1071), IM V5 (IM 1011), IM V6 (IM 1031) – terminal box side mounted

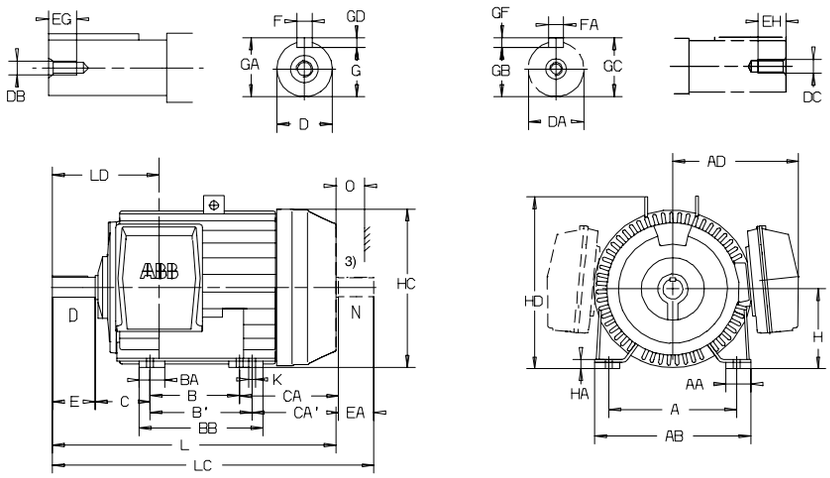

3

Motor size	Poles 1)	A	AA	AB	AD	B	B'	BA	BB	C	CA	CA'	D	DA	DB	DC	E	EA	EG	EH
355 SA,SB	2	610	110	714	570	500	–	100	584	254	416	–	70	70	M20	M20	140	140	40	40
	4-8	610	110	714	570	500	–	100	584	254	416	–	100	90	M24	M20	210	170	48	48
355 MA	2	610	110	714	570	560	–	100	644	254	416	–	70	70	M20	M20	140	140	40	40
	4-8	610	110	714	570	560	–	100	644	254	416	–	100	90	M24	M24	210	170	48	48
355 MB	2	610	110	714	570	560	–	100	644	254	416	–	70	70	M20	M20	140	140	40	40
	4-8	610	110	714	570	560	–	100	644	254	416	–	100	90	M24	M24	210	170	48	48
355 LA	2	610	110	714	570	630	–	100	714	254	426	–	70	70	M20	M20	140	140	40	40
	4-8	610	110	714	570	630	–	100	714	254	426	–	100	90	M24	M24	210	170	48	48
355 LB	2	610	110	714	570	630	–	100	714	254	426	–	70	70	M20	M20	140	140	40	40
	4-8	610	110	714	570	630	–	100	714	254	426	–	100	90	M24	M24	210	170	48	48
355 LKD	4-8	610	110	714	570	630	710	100	802	254	583	503	100	90	M24	M24	210	170	48	48
400 MLA	2	686	140	820	603	630	710	140	850	280	583	503	70	70	M20	M20	140	140	40	40
	4-8	686	140	820	603	630	710	140	850	280	583	503	100	90	M24	M24	210	170	48	48
400 MLB	2	686	140	820	603	630	710	140	850	280	583	503	70	70	M20	M20	140	140	40	40
	4-8	686	140	820	603	630	710	140	850	280	583	503	100	90	M24	M24	210	170	48	48
400 LKA	2	686	140	820	603	710	800	140	935	280	643	553	80	75	M20	M20	170	140	40	40
	4-8	686	140	820	603	710	800	140	935	280	643	553	100	90	M24	M24	210	170	48	48
400 LKB	2	686	140	820	603	710	800	140	935	280	643	553	80	75	M20	M20	170	140	40	40
	4-8	686	140	820	603	710	800	140	935	280	643	553	100	90	M24	M24	210	170	48	48

Motor size	Poles 1)	F	FA	G	GA	GB	GC	GD	GF	H	HA	HC	HD	K	L	LC	LD	O 2)
355 SA,SB	2	20	20	62.5	74.5	62.5	74.5	12	12	355	36	715	768	28	1310	1460	392	130
	4-8	28	25	90	106	81	95	16	14	355	36	715	768	28	1380	1560	462	130
355 MA	2	20	20	62.5	74.5	62.5	74.5	12	12	355	36	715	768	28	1370	1520	392	130
	4-8	28	25	90	106	81	95	16	14	355	36	715	768	28	1440	1620	462	130
355 MB	2	20	20	62.5	74.5	62.5	74.5	12	12	355	36	715	768	28	1370	1520	392	130
	4-8	28	25	90	106	81	95	16	14	355	36	715	768	28	1440	1620	462	130
355 LA	2	20	20	62.5	74.5	62.5	74.5	12	12	355	36	715	768	28	1450	1600	392	130
	4-8	28	25	90	106	81	95	16	14	355	36	715	768	28	1520	1700	462	130
355 LB	2	20	20	62.5	74.5	62.5	74.5	12	12	355	36	715	768	28	1450	1600	392	130
	4-8	28	25	90	106	81	95	16	14	355	36	715	768	28	1520	1700	462	130
355 LKD	4-8	28	25	90	106	91	95	16	14	355	36	715	768	28	1660	1847	462	130
400 MLA	2	20	20	62.5	74.5	62.5	74.5	12	12	400	45	805	900	35	1616	1773	408	150
	4-8	28	25	90	106	81	95	16	14	400	45	805	900	35	1686	1873	478	150
400 MLB	2	20	20	62.5	74.5	62.5	74.5	12	12	400	45	805	900	35	1616	1773	408	150
	4-8	28	25	90	106	81	95	16	14	400	45	805	900	35	1686	1873	478	150
400 LKA	2	22	20	71	85	67.5	79.5	14	12	400	45	805	900	35	1786	1943	438	150
	4-8	28	25	90	106	81	95	16	14	400	45	805	900	35	1826	2013	478	150
400 LKB	2	22	20	71	85	67.5	79.5	14	12	400	45	805	900	35	1786	1943	438	150
	4-8	28	25	90	106	81	95	16	14	400	45	805	900	35	1826	2013	478	150

Tolerances:

A, B	ISO js14	H	ISO 0, -1.0
D,DA	ISO m6		
F, FA	ISO h9		

1) Dimensions for 4-pole motors also valid for 4/6- and 4-8 -pole two-speed motors.
2) Cooling distance.
3) Second shaft end on request.

Above dimensions are in mm.
For detailed drawings please see our web-pages 'www.abb.com/motors&drives' or contact us.

General purpose steel motors Sizes 280-315

Dimension drawings

Flange-mounted; IM B5 (IM 3001), V1 (IM 3011), V3 (IM 3031) and IM B14 (IM 3601), V18 (IM 3611), V19 (IM 3631)

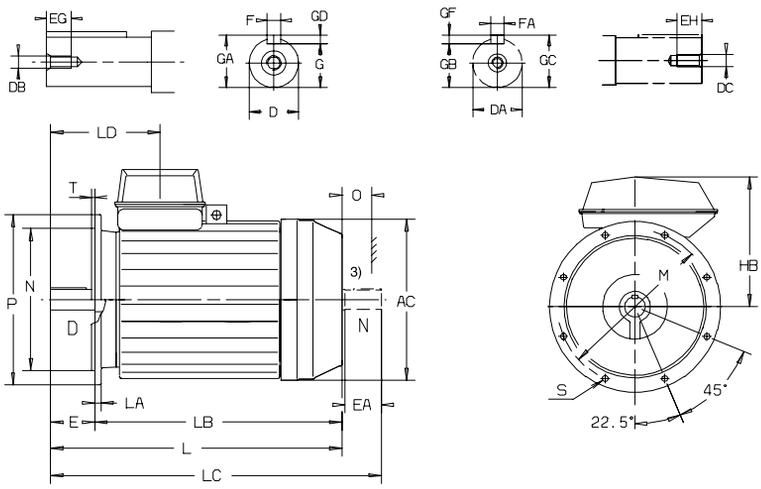

Motor size	Poles 1)	AC	D	DA	DB	DC	E	EA	EG	EH	F	FA	G	GA	GB	GC
280 SA	2	555	65	60	M20	M20	140	140	40	40	18	18	58	69	53	64
	4-8	555	75	65	M20	M20	140	140	40	40	20	18	67.5	79.5	58	69
280 SMA	2	555	65	60	M20	M20	140	140	40	40	18	18	58	69	53	64
	4-8	555	75	65	M20	M20	140	140	40	40	20	18	67.5	79.5	58	69
280 MB	2	555	65	60	M20	M20	140	140	40	40	18	18	58	69	53	64
	4-8	555	75	65	M20	M20	140	140	40	40	20	18	67.5	79.5	58	69
280 MC,MD	2	555	65	60	M20	M20	140	140	40	40	18	18	58	69	53	64
	4-8	555	75	65	M20	M20	140	140	40	40	20	18	67.5	79.5	58	69
315 SA	2	624	65	60	M20	M20	140	140	40	40	18	18	58	69	53	64
	4-8	624	80	75	M20	M20	170	140	40	40	22	20	71	85	67.5	79.5
315 SMA	2	624	65	60	M20	M20	140	140	40	40	18	18	58	69	53	64
	4-8	624	80	75	M20	M20	170	140	40	40	22	20	71	85	67.5	79.5
315 MB	2	624	65	60	M20	M20	140	140	40	40	18	18	58	69	53	64
	4-8	624	80	75	M20	M20	170	140	40	40	22	20	71	85	67.5	79.5
315 LA	2	624	65	60	M20	M20	140	140	40	40	18	18	58	69	53	64
	4-8	624	90	75	M24	M20	170	140	48	40	25	20	81	95	67.5	79.5
315 LB,LC	2	624	65	60	M20	M20	140	140	40	40	18	18	58	69	53	64
	4-8	624	90	75	M24	M20	170	140	48	40	25	20	81	95	67.5	79.5

Motor size	Poles 1)	GD	GF	HB	L	LA	LB	LC	LD	M	N	O 2)	P	S	T
280 SA	2	11	11	450	1060	22	920	1210	385	500	450	100	550	18	5
	4-8	12	11	450	990	22	850	1140	385	500	450	100	550	18	5
280 SMA	2	11	11	450	1060	22	920	1210	385	500	450	100	550	18	5
	4-8	12	11	450	1060	22	920	1210	385	500	450	100	550	18	5
280 MB	2	11	11	450	1120	22	980	1270	385	500	450	100	550	18	5
	4-8	12	11	450	1120	22	980	1270	385	500	450	100	550	18	5
280 MC	2	11	11	450	1255	22	980	1405	385	500	450	100	550	18	5
	4-8	12	11	450	1255	22	980	1405	385	500	450	100	550	18	5
280 MD	2	11	11	450	1255	22	980	1405	385	500	450	100	550	18	5
	4-8	12	11	450	1255	22	980	1405	385	500	450	100	550	18	5
315 SA	2	11	11	505	1095	25	955	1245	390	600	550	115	660	23	6
	4-8	14	12	505	1125	25	955	1275	420	600	550	115	660	23	6
315 SMA	2	11	11	505	1195	25	1055	1345	390	600	550	115	660	23	6
	4-8	14	12	505	1125	25	955	1275	420	600	550	115	660	23	6
315 MB	2	11	11	505	1195	25	1055	1345	390	600	550	115	660	23	6
	4-8	14	12	505	1225	25	1055	1375	420	600	550	115	660	23	6
315 LA	2	11	11	505	1265	25	1125	1415	390	600	550	115	660	23	6
	4-8	14	12	505	1295	25	1125	1445	420	600	550	115	660	23	6
315 LB	2	11	11	505	1545	25	1125	1415	390	600	550	115	660	23	6
	4-8	14	12	505	1575	25	1405	1725	420	600	550	115	660	23	6
315 LC	2	11	11	505	1545	25	1125	1415	390	600	550	115	660	23	6
	4-8	14	12	526	1575	25	1405	1725	420	600	550	115	660	23	6

Tolerances:

D,DA	ISO m6
F, FA	ISO h9
N	ISO j6

1) Dimensions for 4-pole motors also valid for 4/6- and 4-8 -pole two-speed motors.
2) Cooling distance.
3) Second shaft end on request.

Above dimensions are in mm.
For detailed drawings please see our web-pages 'www.abb.com/motors&drives' or contact us.

Dimension drawings

Flange-mounted; IM B5 (IM 3001), V1 (IM 3011), V3 (IM 3031) and IM B14 (IM 3601), V18 (IM 3611), V19 (IM 3631)

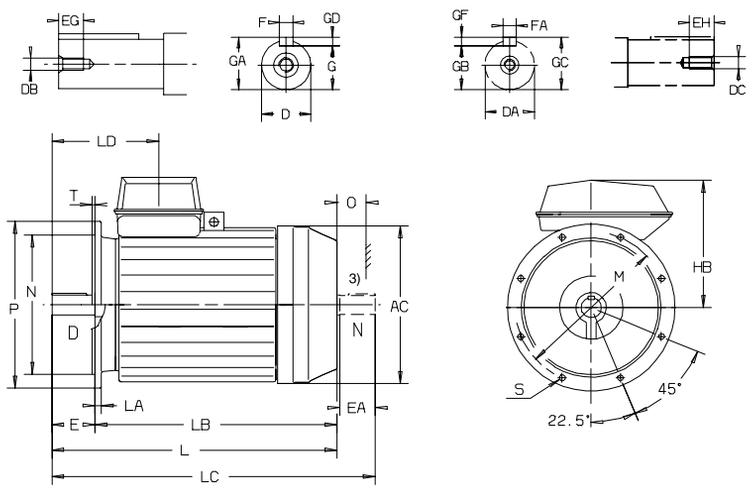

Motor size	Poles 1)	AC	D	DA	DB	DC	E	EA	EG	EH	F	FA	G	GA	GB	GC
355 SA,SB	2	720	70	70	M20	M20	140	140	40	40	20	20	62.5	74.5	62.5	74.5
	4-8	720	100	90	M24	M24	210	170	48	48	28	25	90	106	81	95
355 MA	2	720	70	70	M20	M20	140	140	40	40	20	20	62.5	74.5	62.5	74.5
	4-8	720	100	90	M24	M24	210	170	48	48	28	25	90	106	81	95
355 MB	2	720	70	70	M20	M20	140	140	40	40	20	20	62.5	74.5	62.5	74.5
	4-8	720	100	90	M24	M24	210	170	48	48	28	25	90	106	81	95
355 LA	2	720	70	70	M20	M20	140	140	40	40	20	20	62.5	74.5	62.5	74.5
	4-8	720	100	90	M24	M24	210	170	48	48	28	25	90	106	81	95
355 LB	2	720	70	70	M20	M20	140	140	40	40	20	20	62.5	74.5	62.5	74.5
	4-8	720	100	90	M24	M24	210	170	48	48	28	25	90	106	81	95
355 LKD	4-8	720	100	90	M24	M24	210	170	48	48	28	25	90	106	81	95
400 MLA	2	810	70	70	M20	M20	140	140	40	40	20	20	62.5	74.5	62.5	74.5
	4-8	810	100	90	M24	M24	210	170	48	48	28	25	90	106	81	95
400 MLB	2	810	70	70	M20	M20	140	140	40	40	20	20	62.5	74.5	62.5	74.5
	4-8	810	100	90	M24	M24	210	170	48	48	28	25	90	106	81	95
400 LKA	2	810	80	75	M20	M20	170	140	40	40	22	20	71	85	67.5	79.5
	4-8	810	100	90	M24	M24	210	170	48	48	28	25	90	106	81	95
400 LKB	2	810	80	75	M20	M20	170	140	40	40	22	20	71	85	67.5	79.5
	4-8	810	100	90	M24	M24	210	170	48	48	28	25	90	106	81	95

Motor size	Poles 1)	GD	GF	HB	L	LA	LB	LC	LD	M	N	O 2)	P	S	T
355 SA,SB	2	12	12	565	1310	25	1170	1460	392	740	680	130	800	23	6
	4-8	16	14	565	1380	25	1170	1560	462	740	680	130	800	23	6
355 MA	2	12	12	565	1370	25	1230	1520	392	740	680	130	800	23	6
	4-8	16	14	565	1440	25	1230	1620	462	740	680	130	800	23	6
355 MB	2	12	12	565	1370	25	1230	1520	392	740	680	130	800	23	6
	4-8	16	14	565	1440	25	1230	1620	462	740	680	130	800	23	6
355 LA	2	12	12	565	1450	25	1310	1600	392	740	680	130	800	23	6
	4-8	16	14	565	1520	25	1310	1700	462	740	680	130	800	23	6
355 LB	2	12	12	565	1450	25	1310	1600	392	740	680	130	800	23	6
	4-8	16	14	565	1520	25	1310	1700	462	740	680	130	800	23	6
355 LKD	4-8	16	14	565	1660	25	1450	1847	462	740	680	130	800	23	6
400 MLA	2	12	12	603	1616	25	1476	1773	408	740	680	150	800	23	6
	4-8	16	14	603	1686	25	1476	1873	478	740	680	150	800	23	6
400 MLB	2	12	12	603	1616	25	1476	1773	408	740	680	150	800	23	6
	4-8	16	14	603	1686	25	1476	1873	478	740	680	150	800	23	6
400 LKA	2	14	12	603	1786	25	1616	1943	438	740	680	150	800	23	6
	4-8	16	14	603	1826	25	1616	2013	478	740	680	150	800	23	6
400 LKB	2	14	12	603	1786	25	1616	1943	438	740	680	150	800	23	6
	4-8	16	14	603	1826	25	1616	2013	478	740	680	150	800	23	6

Tolerances:

D,DA	ISO m6
F, FA	ISO h9
N	ISO j6

1) Dimensions for 4-pole motors also valid for 4/6- and 4-8 -pole two-speed motors.
2) Cooling distance.
3) Second shaft end on request.

Above dimensions are in mm.
For detailed drawings please see our web-pages 'www.abb.com/motors&drives' or contact us.

General purpose steel motors Sizes 280-315

Dimension drawings

Foot- and flange-mounted; IM B35 (IM 2001), IM V15 (IM 2011), IM V36 (IM 2031) – terminal box top mounted

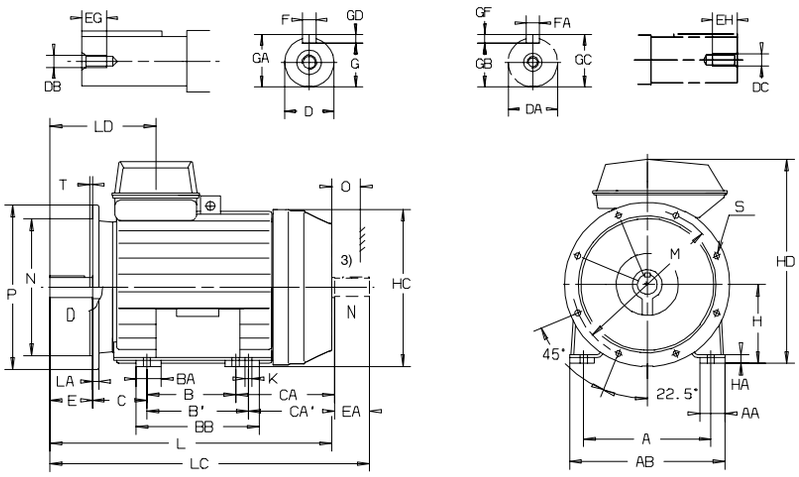

3

Motor size	Poles 1)	A	AA	AB	B	B'	BA	BB	C	CA	CA'	D	DA	DB	DC	E	EA	EG	EH	F	FA
280 SA	2	457	80	545	368	–	100	501	190	372	–	65	60	M20	M20	140	140	40	40	18	18
	4-8	457	80	545	368	–	100	501	190	302	–	75	65	M20	M20	140	140	40	40	20	18
280 SMA	2	457	80	545	368	419	100	501	190	372	321	65	60	M20	M20	140	140	40	40	18	18
	4-8	457	80	545	368	419	100	501	190	372	321	75	65	M20	M20	140	140	40	40	20	18
280 MB	2	457	80	545	419	–	100	501	190	381	–	65	60	M20	M20	140	140	40	40	18	18
	4-8	457	80	545	419	–	100	501	190	381	–	75	65	M20	M20	140	140	40	40	20	18
280 MC,MD	2	457	80	545	419	–	100	501	190	381	–	65	60	M20	M20	140	140	40	40	18	18
	4-8	457	80	545	419	–	100	501	190	381	–	75	65	M20	M20	140	140	40	40	20	18
315 SA	2	508	100	622	406	–	100	539	216	343	–	65	60	M20	M20	140	140	40	40	18	18
	4-8	508	100	622	406	–	100	539	216	343	–	80	75	M20	M20	170	140	40	40	22	20
315 SMA	2	508	100	622	406	457	100	539	216	443	392	65	60	M20	M20	140	140	40	40	18	18
	4-8	508	100	622	406	457	100	539	216	343	292	80	75	M20	M20	170	140	40	40	22	20
315 MB	2	508	100	622	457	–	100	539	216	392	–	65	60	M20	M20	140	140	40	40	18	18
	4-8	508	100	622	457	–	100	539	216	392	–	80	75	M20	M20	170	140	40	40	22	20
315 LA	2	508	100	622	508	–	100	592	216	411	–	65	60	M20	M20	140	140	40	40	18	18
	4-8	508	100	622	508	–	100	592	216	411	–	90	75	M24	M20	170	140	48	40	25	20
315 LB,LC	2	508	100	622	508	–	100	592	216	411	–	65	60	M20	M20	140	140	40	40	18	18
	4-8	508	100	622	508	–	100	592	216	411	–	90	75	M24	M20	170	140	48	40	25	20

Motor size	Poles 1)	G	GA	GB	GC	GD	GF	H	HA	HC	HD	K	L	LC	LD	M	N	O 2)	P	S	T
280 SA	2	58	69	53	64	11	11	280	32	558	730	24	1060	1210	385	500	450	100	550	18	5
	4-8	67.5	79.5	58	69	12	11	280	32	558	730	24	990	1140	385	500	450	100	550	18	5
280 SMA	2	58	69	53	64	11	11	280	32	558	730	24	1060	1210	385	500	450	100	550	18	5
	4-8	67.5	79.5	58	69	12	11	280	32	558	730	24	1060	1210	385	500	450	100	550	18	5
280 MB	2	58	69	53	64	11	11	280	32	558	730	24	1120	1270	385	500	450	100	550	18	5
	4-8	67.5	79.5	58	69	12	11	280	32	558	730	24	1120	1270	385	500	450	100	550	18	5
280 MC	2	58	69	53	64	11	11	280	32	558	730	24	1255	1405	385	500	450	100	550	18	5
	4-8	67.5	79.5	58	69	12	11	280	32	558	730	24	1225	1405	385	500	450	100	550	18	5
280 MD	2	58	69	53	64	11	11	280	32	558	730	24	1255	1405	385	500	450	100	550	18	5
	4-8	67.5	79.5	58	69	12	11	280	32	558	730	24	1255	1405	385	500	450	100	550	18	5
315 SA	2	58	69	53	64	11	11	315	32	627	820	28	1095	1245	390	600	550	115	660	23	6
	4-8	71	85	67.5	79.5	14	12	315	32	627	820	28	1125	1275	420	600	550	115	660	23	6
315 SMA	2	58	69	53	64	11	11	315	32	627	820	28	1195	1345	390	600	550	115	660	23	6
	4-8	71	85	67.5	79.5	14	12	315	32	627	820	28	1125	1275	420	600	550	115	660	23	6
315 MB	2	58	69	53	64	11	11	315	32	627	820	28	1195	1345	390	600	550	115	660	23	6
	4-8	71	85	67.5	79.5	14	12	315	32	627	820	28	1225	1375	420	600	550	115	660	23	6
315 LA	2	58	69	53	64	11	11	315	32	627	820	28	1265	1415	390	600	550	115	660	23	6
	4-8	81	95	67.5	79.5	14	12	315	32	627	820	28	1295	1445	420	600	550	115	660	23	6
315 LB	2	58	69	53	64	11	11	315	32	627	820	28	1545	1695	390	600	550	115	660	23	6
	4-8	81	95	67.5	79.5	14	12	315	32	627	820	28	1575	1725	420	600	550	115	660	23	6
315 LC	2	58	69	53	64	11	11	315	32	627	848	28	1545	1695	390	600	550	115	660	23	6
	4	81	95	67.5	79.5	14	12	315	32	627	848	28	1575	1725	420	600	550	115	660	23	6
	6	81	95	67.5	79.5	14	12	315	32	627	820	28	1575	1725	420	600	550	115	660	23	6

Tolerances:

A, B	ISO js14	H	ISO 0, -1.0
D,DA	ISO m6	N	ISO j6
F, FA	ISO h9		

1) Dimensions for 4-pole motors also valid for 4/6- and 4-8 -pole two-speed motors.
2) Cooling distance.
3) Second shaft end on request.

Above dimensions are in mm.
For detailed drawings please see our web-pages 'www.abb.com/motors&drives' or contact us.

Dimension drawings

Foot- and flange-mounted; IM B35 (IM 2001), IM V15 (IM 2011), IM V36 (IM 2031) – terminal box side mounted

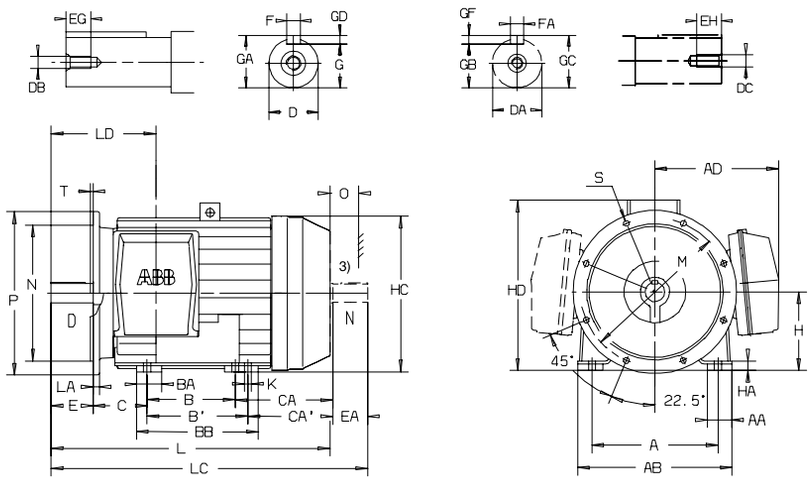

Motor size	Poles 1)	A	AA	AB	AD	B	B'	BA	BB	C	CA	CA'	D	DA	DB	DC	E	EA	EG	EH	F	FA
280 SA	2	457	80	545	448	368	–	100	501	190	372	–	65	60	M20	M20	140	140	40	40	18	18
	4-8	457	80	545	448	368	–	100	501	190	302	–	75	65	M20	M20	140	140	40	40	20	18
280 SMA	2	457	80	545	448	368	419	100	501	190	372	321	65	60	M20	M20	140	140	40	40	18	18
	4-8	457	80	545	448	368	419	100	501	190	372	321	75	65	M20	M20	140	140	40	40	20	18
280 MB	2	457	80	545	448	419	–	100	501	190	381	–	65	60	M20	M20	140	140	40	40	18	18
	4-8	457	80	545	448	419	–	100	501	190	381	–	75	65	M20	M20	140	140	40	40	20	18
280 MC,MD	2	457	80	545	448	419	–	100	501	190	381	–	65	60	M20	M20	140	140	40	40	18	18
	4-8	457	80	545	448	419	–	100	501	190	381	–	75	65	M20	M20	140	140	40	40	20	18
315 SA	2	508	100	622	502	406	–	100	539	216	343	–	65	60	M20	M20	140	140	40	40	18	18
	4-8	508	100	622	502	406	–	100	539	216	343	–	80	75	M20	M20	170	140	40	40	22	20
315 SMA	2	508	100	622	502	406	457	100	539	216	443	392	65	60	M20	M20	140	140	40	40	18	18
	4-8	508	100	622	502	406	457	100	539	216	343	292	80	75	M20	M20	170	140	40	40	22	20
315 MB	2	508	100	622	502	457	–	100	539	216	392	–	65	60	M20	M20	140	140	40	40	18	18
	4-8	508	100	622	502	457	–	100	539	216	392	–	80	75	M20	M20	170	140	40	40	22	20
315 LA	2	508	100	622	502	508	–	100	592	216	411	–	65	60	M20	M20	140	140	40	40	18	18
	4-8	508	100	622	502	508	–	100	592	216	411	–	90	75	M24	M20	170	140	48	40	25	20
315 LB,LC	2	508	100	622	502	508	–	100	592	216	411	–	65	60	M20	M20	140	140	40	40	18	18
	4-8	508	100	622	502	508	–	100	592	216	411	–	90	75	M24	M20	170	140	48	40	25	20

Motor size	Poles 1)	G	GA	GB	GC	GD	GF	H	HA	HC	HD	K	L	LC	LD	M	N	O 2)	P	S	T
280 SA	2	58	69	53	64	11	11	280	32	558	620	24	1060	1210	385	500	450	100	550	18	5
	4-8	67.5	79.5	58	69	12	11	280	32	558	620	24	990	1140	385	500	450	100	550	18	5
280 SMA	2	58	69	53	64	11	11	280	32	558	620	24	1060	1210	385	500	450	100	550	18	5
	4-8	67.5	79.5	58	69	12	11	280	32	558	620	24	1060	1210	385	500	450	100	550	18	5
280 MB	2	58	69	53	64	11	11	280	32	558	620	24	1120	1270	385	500	450	100	550	18	5
	4-8	67.5	79.5	58	69	12	11	280	32	558	620	24	1120	1270	385	500	450	100	550	18	5
280 MC	2	58	69	53	64	11	11	280	32	558	620	24	1255	1405	385	500	450	100	550	18	5
	4-8	67.5	79.5	58	69	12	11	280	32	558	620	24	1255	1405	385	500	450	100	550	18	5
280 MD	2	58	69	53	64	11	11	280	32	558	620	24	1255	1405	385	500	450	100	550	18	5
	4-8	67.5	79.5	58	69	12	11	280	32	558	620	24	1255	1405	385	500	450	100	550	18	5
315 SA	2	58	69	53	64	11	11	315	32	627	685	28	1095	1245	390	600	550	115	660	23	6
	4-8	71	85	67.5	79.5	14	12	315	32	627	685	28	1125	1275	420	600	550	115	660	23	6
315 SMA	2	58	69	53	64	11	11	315	32	627	685	28	1195	1345	390	600	550	115	660	23	6
	4-8	71	85	67.5	79.5	14	12	315	32	627	685	28	1125	1275	420	600	550	115	660	23	6
315 MB	2	58	69	53	64	11	11	315	32	627	685	28	1195	1345	390	600	550	115	660	23	6
	4-8	71	85	67.5	79.5	14	12	315	32	627	685	28	1225	1375	420	600	550	115	660	23	6
315 LA	2	58	69	53	64	11	11	315	32	627	685	28	1265	1415	390	600	550	115	660	23	6
	4-8	81	95	67.5	79.5	14	12	315	32	627	685	28	1295	1445	420	600	550	115	660	23	6
315 LB,LC	2	58	69	53	64	11	11	315	32	627	685	28	1545	1695	390	600	550	115	660	23	6
	4-8	81	95	67.5	79.5	14	12	315	32	627	685	28	1575	1725	420	600	550	115	660	23	6

Tolerances:

A, B	ISO js14	H	ISO 0, -1.0
D,DA	ISO m6	N	ISO j6
F, FA	ISO h9		

1) Dimensions for 4-pole motors also valid for 4/6- and 4-8 -pole two-speed motors.
2) Cooling distance.
3) Second shaft end on request.

Above dimensions are in mm.
For detailed drawings please see our web-pages 'www.abb.com/motors&drives' or contact us.

General purpose steel motors Sizes 355-400

Dimension drawings

Foot- and flange-mounted; IM B35 (IM 2001), IM V15 (IM 2011), IM V36 (IM 2031) – terminal box top mounted

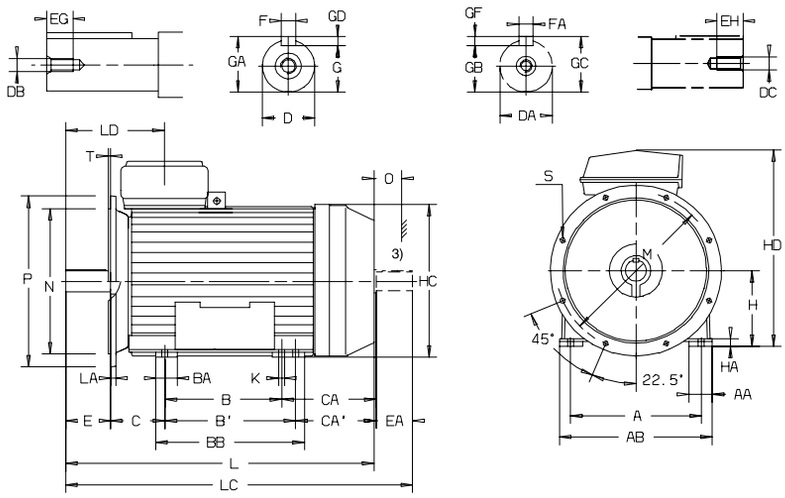

Motor size	Poles 1)	A	AA	AB	B	B'	BA	BB	C	CA	CA'	D	DA	DB	DC	E	EA	EG	EH	F	FA
355 SA,SB	2	610	110	714	500	–	100	584	254	426	–	70	70	M20	M20	140	140	40	40	20	20
	4-8	610	110	714	500	–	100	584	254	426	–	100	90	M24	M20	210	170	48	48	28	25
355 MA	2	610	110	714	560	–	100	644	254	426	–	70	70	M20	M20	140	140	40	40	20	20
	4-8	610	110	714	560	–	100	644	254	426	–	100	90	M24	M24	210	170	48	48	28	25
355 MB	2	610	110	714	560	–	100	644	254	426	–	70	70	M20	M20	140	140	40	40	20	20
	4-8	610	110	714	560	–	100	644	254	426	–	100	90	M24	M24	210	170	48	48	28	25
355 LA	2	610	110	714	630	–	100	714	254	436	–	70	70	M20	M20	140	140	40	40	20	20
	4-8	610	110	714	630	–	100	714	254	436	–	100	90	M24	M24	210	170	48	48	28	25
355 LB	2	610	110	714	630	–	100	714	254	436	–	70	70	M20	M20	140	140	40	40	20	20
	4-8	610	110	714	630	–	100	714	254	436	–	100	90	M24	M24	210	170	48	48	28	25
355 LKD	4-8	610	110	714	630	710	100	802	254	583	503	100	90	M24	M24	210	170	48	48	28	25
400 MLA	2	686	140	820	630	710	140	850	280	583	503	70	70	M20	M20	140	140	40	40	20	20
	4-8	686	140	820	630	710	140	850	280	583	503	100	90	M24	M24	210	170	48	48	28	25
400 MLB	2	686	140	820	630	710	140	850	280	583	503	70	70	M20	M20	140	140	40	40	20	20
	4-8	686	140	820	630	710	140	850	280	583	503	100	90	M24	M24	210	170	48	48	28	25
400 LKA	2	686	140	820	710	800	140	935	280	643	553	80	75	M20	M20	170	140	40	40	22	20
	4-8	686	140	820	710	800	140	935	280	643	553	100	90	M24	M24	210	170	48	48	28	25
400 LKB	2	686	140	820	710	800	140	935	280	643	553	80	75	M20	M20	170	140	40	40	22	20
	4-8	686	140	820	710	800	140	935	280	643	553	100	90	M24	M24	210	170	48	48	28	25

Motor size	Poles 1)	G	GA	GB	GC	GD	GF	H	HA	HC	HD	K	L	LC	LD	M	N	O 2)	P	S	T
355 SA,SB	2	62.5	74.5	62.5	74.5	12	12	355	36	715	920	28	1310	1460	392	740	680	130	800	23	6
	4-8	90	106	81	95	16	14	355	36	715	920	28	1380	1560	462	740	680	130	800	23	6
355 MA	2	62.5	74.5	62.5	74.5	12	12	355	36	715	920	28	1370	1520	392	740	680	130	800	23	6
	4-8	90	106	81	95	16	14	355	36	715	920	28	1440	1620	462	740	680	130	800	23	6
355 MB	2	62.5	74.5	62.5	74.5	12	12	355	36	715	920	28	1370	1520	392	740	680	130	800	23	6
	4-8	90	106	81	95	16	14	355	36	715	920	28	1440	1620	462	740	680	130	800	23	6
355 LA	2	62.5	74.5	62.5	74.5	12	12	355	36	715	920	28	1450	1600	392	740	680	130	800	23	6
	4-8	90	106	81	95	16	14	355	36	715	920	28	1520	1700	462	740	680	130	800	23	6
355 LB	2	62.5	74.5	62.5	74.5	12	12	355	36	715	920	28	1450	1600	392	740	680	130	800	23	6
	4-8	90	106	81	95	16	14	355	36	715	920	28	1520	1700	462	740	680	130	800	23	6
355 LKD	4-8	90	106	91	95	16	14	355	36	715	920	28	1660	1847	462	740	680	130	800	23	6
400 MLA	2	62.5	74.5	62.5	74.5	12	12	400	45	805	1003	35	1616	1773	408	740	680	150	800	23	6
	4-8	90	106	81	95	16	14	400	45	805	1003	35	1686	1873	478	740	680	150	800	23	6
400 MLB	2	62.5	74.5	62.5	74.5	12	12	400	45	805	1003	35	1616	1773	408	740	680	150	800	23	6
	4-8	90	106	81	95	16	14	400	45	805	1003	35	1686	1873	478	740	680	150	800	23	6
400 LKA	2	71	85	67.5	79.5	14	12	400	45	805	1003	35	1786	1943	438	740	680	150	800	23	6
	4-8	90	106	81	95	16	14	400	45	805	1003	35	1826	2013	478	740	680	150	800	23	6
400 LKB	2	71	85	67.5	79.5	14	12	400	45	805	1003	35	1786	1943	438	740	680	150	800	23	6
	4-8	90	106	81	95	16	14	400	45	805	1003	35	1826	2013	478	740	680	150	800	23	6

Tolerances:

A, B	ISO js14	H	ISO 0, -1.0
D,DA	ISO m6	N	ISO j6
F, FA	ISO h9		

1) Dimensions for 4-pole motors also valid for 4/6- and 4-8 -pole two-speed motors.
2) Cooling distance.
3) Second shaft end on request.

Above dimensions are in mm.
For detailed drawings please see our web-pages 'www.abb.com/motors&drives' or contact us.

Dimension drawings

Foot- and flange-mounted; IM B35 (IM 2001), IM V15 (IM 2011), IM V36 (IM 2031) – terminal box side mounted

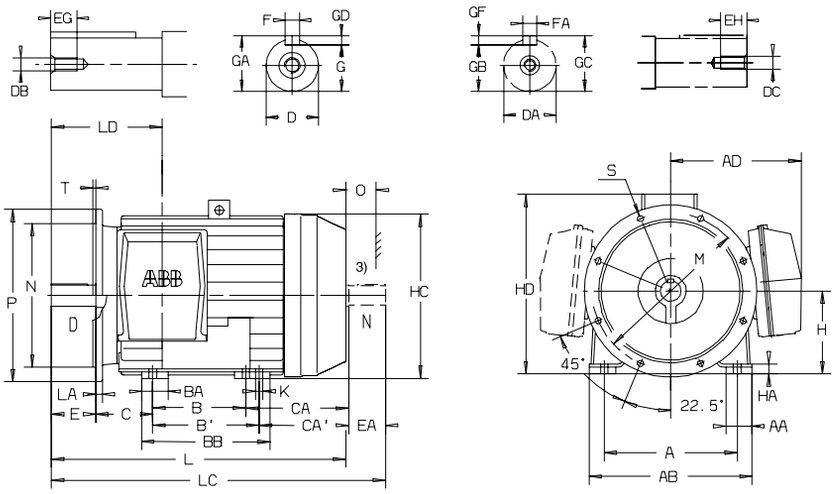

Motor size	Poles 1)	A	AA	AB	AD	B	B'	BA	BB	C	CA	CA'	D	DA	DB	DC	E	EA	EG	EH	F	FA
355 SA,SB	2	610	110	714	570	500	–	100	584	254	416	–	70	70	M20	M20	140	140	40	40	20	20
	4-8	610	110	714	570	500	–	100	584	254	416	–	100	90	M24	M20	210	170	48	48	28	25
355 MA	2	610	110	714	570	560	–	100	644	254	416	–	70	70	M20	M20	140	140	40	40	20	20
	4-8	610	110	714	570	560	–	100	644	254	416	–	100	90	M24	M24	210	170	48	48	28	25
355 MB	2	610	110	714	570	560	–	100	644	254	416	–	70	70	M20	M20	140	140	40	40	20	20
	4-8	610	110	714	570	560	–	100	644	254	416	–	100	90	M24	M24	210	170	48	48	28	25
355 LA	2	610	110	714	570	630	–	100	765	254	426	–	70	70	M20	M20	140	140	40	40	20	20
	4-8	610	110	714	570	630	–	100	765	254	426	–	100	90	M24	M24	210	170	48	48	28	25
355 LB	2	610	110	714	570	630	–	100	765	254	426	–	70	70	M20	M20	140	140	40	40	20	20
	4-8	610	110	714	570	630	–	100	765	254	426	–	100	90	M24	M24	210	170	48	48	28	25
355 LKD	4-8	610	110	714	570	630	710	100	802	254	583	503	100	90	M24	M24	210	170	48	48	28	25
400 MLA	2	686	140	820	603	630	710	140	850	280	583	503	70	70	M20	M20	140	140	40	40	20	20
	4-8	686	140	820	603	630	710	140	850	280	583	503	100	90	M24	M24	210	170	48	48	28	25
400 MLB	2	686	140	820	603	630	710	140	850	280	583	503	70	70	M20	M20	140	140	40	40	20	20
	4-8	686	140	820	603	630	710	140	850	280	583	503	100	90	M24	M24	210	170	48	48	28	25
400 LKA	2	686	140	820	603	710	800	140	935	280	643	553	80	75	M20	M20	170	140	40	40	22	20
	4-8	686	140	820	603	710	800	140	935	280	643	553	100	90	M24	M24	210	170	48	48	28	25
400 LKB	2	686	140	820	603	710	800	140	935	280	643	553	80	75	M20	M20	170	140	40	40	22	20
	4-8	686	140	820	603	710	800	140	935	280	643	553	100	90	M24	M24	210	170	48	48	28	25

Motor size	Poles 1)	G	GA	GB	GC	GD	GF	H	HA	HC	HD	K	L	LC	LD	M	N	O 2)	P	S	T
355 SA,SB	2	62.5	74.5	62.5	74.5	12	12	355	36	715	768	28	1310	1460	392	740	680	130	800	23	6
	4-8	90	106	81	95	16	14	355	36	715	768	28	1380	1560	462	740	680	130	800	23	6
355 MA	2	62.5	74.5	62.5	74.5	12	12	355	36	715	768	28	1370	1520	392	740	680	130	800	23	6
	4-8	90	106	81	95	16	14	355	36	715	768	28	1440	1620	462	740	680	130	800	23	6
355 MB	2	62.5	74.5	62.5	74.5	12	12	355	36	715	768	28	1370	1520	392	740	680	130	800	23	6
	4-8	90	106	81	95	16	14	355	36	715	768	28	1440	1620	462	740	680	130	800	23	6
355 LA	2	62.5	74.5	62.5	74.5	12	12	355	36	715	768	28	1450	1600	392	740	680	130	800	23	6
	4-8	90	106	81	95	16	14	355	36	715	768	28	1520	1700	462	740	680	130	800	23	6
355 LB	2	62.5	74.5	62.5	74.5	12	12	355	36	715	768	28	1450	1600	392	740	680	130	800	23	6
	4-8	90	106	81	95	16	14	355	36	715	768	28	1520	1700	462	740	680	130	800	23	6
355 LKD	4-8	90	106	91	95	16	14	355	36	715	768	28	1660	1847	462	740	680	130	800	23	6
400 MLA	2	62.5	74.5	62.5	74.5	12	12	400	45	805	900	35	1616	1773	408	740	680	150	800	23	6
	4-8	90	106	81	95	16	14	400	45	805	900	35	1686	1873	478	740	680	150	800	23	6
400 MLB	2	62.5	74.5	62.5	74.5	12	12	400	45	805	900	35	1616	1773	408	740	680	150	800	23	6
	4-8	90	106	81	95	16	14	400	45	805	900	35	1686	1873	478	740	680	150	800	23	6
400 LKA	2	71	85	67.5	79.5	14	12	400	45	805	900	35	1786	1943	438	740	680	150	800	23	6
	4-8	90	106	81	95	16	14	400	45	805	900	35	1826	2013	478	740	680	150	800	23	6
400 LKB	2	71	85	67.5	79.5	14	12	400	45	805	900	35	1786	1943	438	740	680	150	800	23	6
	4-8	90	106	81	95	16	14	400	45	805	900	35	1826	2013	478	740	680	150	800	23	6

Tolerances:

A, B	ISO js14	H	ISO 0, -1.0
D,DA	ISO m6	N	ISO j6
F, FA	ISO h9		

1) Dimensions for 4-pole motors also valid for 4/6- and 4-8 -pole two-speed motors.
2) Cooling distance.
3) Second shaft end on request.

Above dimensions are in mm.
For detailed drawings please see our web-pages 'www.abb.com/motors&drives' or contact us.

Dimension drawings

Terminal box in standard design with 6 terminals

Top-mounted terminal box:

122/4
142/4

162/4, 162/9 +
adapter

Side-mounted terminal box:

122/5
142/6
162/7, 162/10

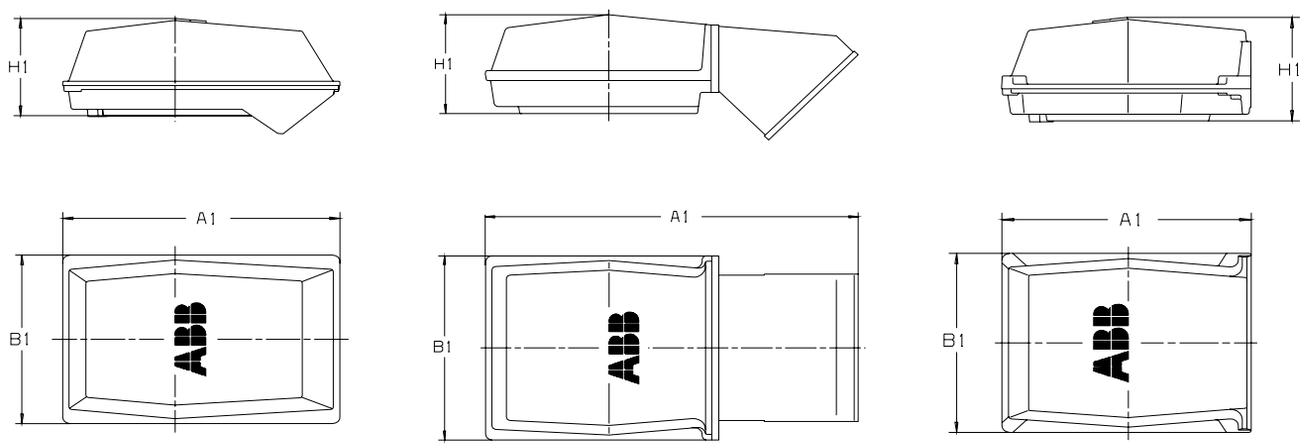

Terminal box type	**Motor size**	A1	B1	H1
Top-mounted terminal box:				
122/4	**280**	455	280	177
142/4	**315 - 400M**	536	349	197
162/4 + adapter	**355 - 400**	787	410	226
Side-mounted terminal box:				
122/5	**280**	383	280	180
142/6	**315 - 400M**	426	347	201
162/7	**355 - 400**	508	412	226

Further details on terminal boxes on previous pages.

For motor dimensions please see dimension drawings on earlier pages.

Rating plate

The rating plate is in table form giving values for speed, current and power factor for six voltages.

ABB Oy, Electrical Machines
LV Motors, Vaasa, Finland

CE

3 ~ Motor M2CA 315 SMA 4 B3
IEC 315 S/M 80

No. 0320-010119452
Ins.cl. F IP 55

V	Hz	kW	r/min	A	cos φ	Duty
690 Y	50	132	1486	138	0,85	S1
400 D	50	132	1486	232	0,85	S1
660 Y	50	132	1485	141	0,86	S1
380 D	50	132	1485	245	0,86	S1
415 D	50	132	1487	232	0,84	S1
440 D	60	150	1784	238	0,87	S1

Prod.code 3GCA312310-ADA

Nmax r/min
6319/C3 6316/C3 730 kg

ABB IEC 60034-1

Accessories

Slide rails for motor sizes 280-400

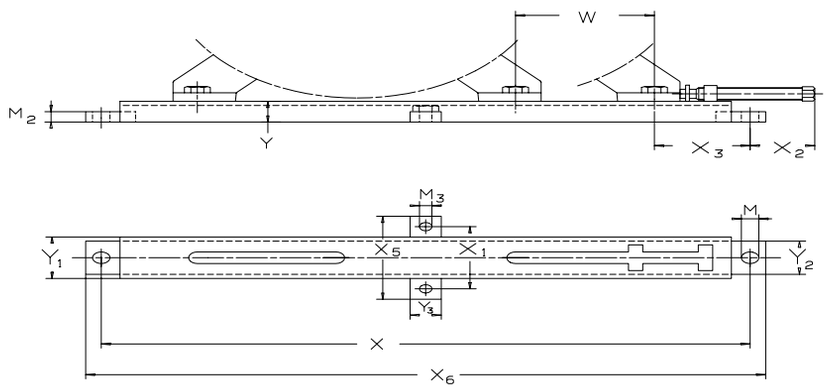

Type	Motor size	M	M_2	M_3	W_{max}	X	X_1	X_2 max	X_3 min	X_5	X_6	Y	Y_1	Y_2	Y_3	Weight/ rail kg
ZHKJ 50	**280**	28	25	20	135	850	150	125	135	200	900	50	100	80	50	14.5
ZHKJ 63	**315**	28	25	20	220	1040	150	125	150	200	1090	50	100	80	50	17.5
ZHKJ 71 [1)]	**355**	33	30	20	275	1260	190	145	185	240	1320	60	140	120	50	31
ZHKJ 71 [1)]	**400**	33	30	20	180	1260	190	140	200	240	1320	60	140	120	50	31

[1)] When mounting on a ceiling or on a wall please contact the manufacturer.

Each set includes two complete slide rails including screw for mounting the motor on the rails. Screws for mounting the rails on the foundation are not included. Slide rails are supplied with unmachined lower surfaces and should, prior to tightenng down, be supported in a suitable manner.

Foundation studs for motor sizes 280-400

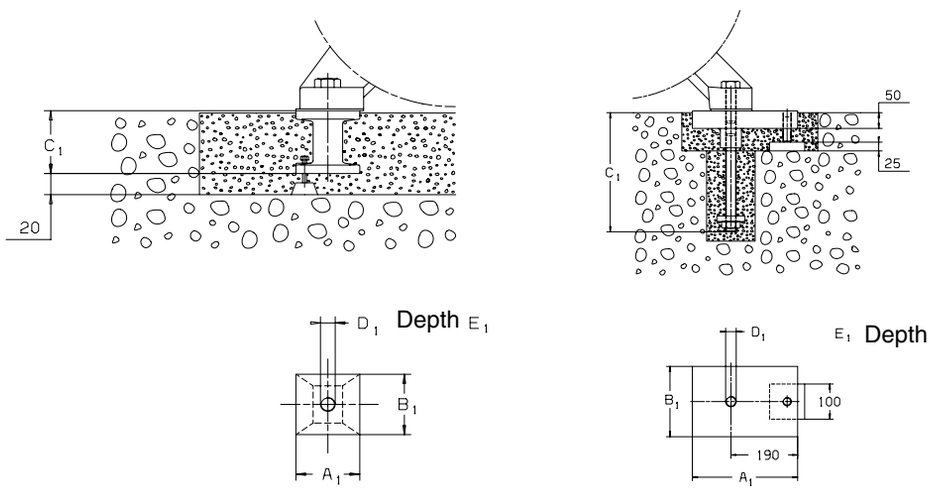

ZBYH 161...241 **ZBHE 301**

Foundation stud type	Fixing screw	Motor size	Main dimensions A1	B1	C1	D1	E1	Weight kg
ZBYH 201	M20 x 70/70 Y	**280**	100	100	95	M20	35	3.4
ZBYH 241	M24 x 90/90 Y	**315, 355**	130	130	135	M24	45	7
ZBHE 301	M30 x 100/100 Y	**400**	300	200	385	M30	65	30

Each set of foundation studs includes 4 studs, fixing screw for the motor, adjusting screw with foundation plate.

Accessories

Protective roof (variant code 005)

Motor size	Poles	Ø	L
280 S_	2	555	1160
	4-12	555	1090
280 SM_	2	555	1160
	4-12	555	1160
280 M_	2	555	1220
	4-12	555	1220
315 S_	2	624	1210
	4-12	624	1240
315 SM_	2	624	1310
	4-12	624	1240
315 M_	2	624	1310
	4-12	624	1340
315 L_	2	624	1380
	4-12	624	1410
355 S_	2	720	1440
	4-12	720	1510
355 M_	2	720	1500
	4-12	720	1570
355 L_	2	720	1580
	4-12	720	1650
355 LK_	4-12	720	1790
400 ML_	2	810	1796
	4-12	810	1836
400 LK_	2	810	1936
	4-12	810	1976

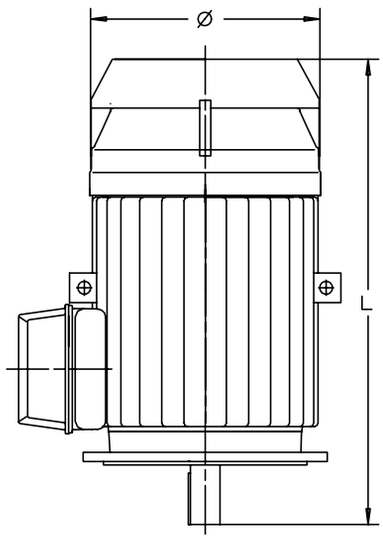

Mounting arrangement IM V1
with protective roof

3

Silencer for motor sizes 280-400

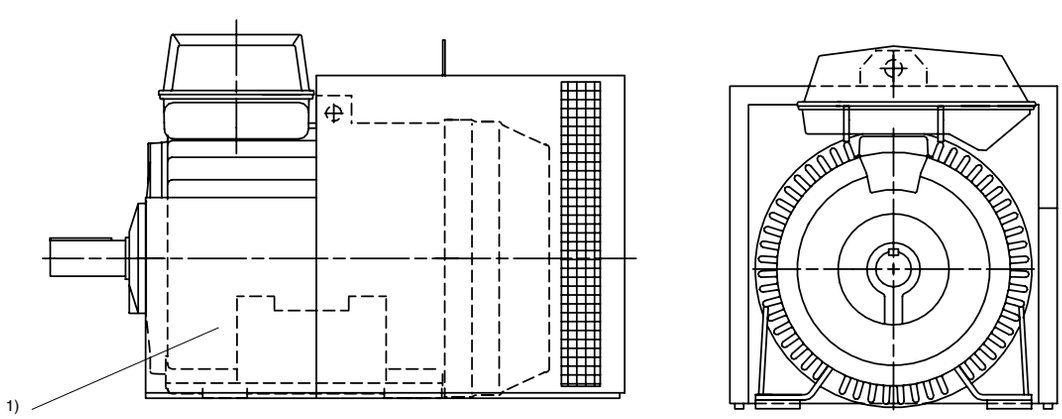

Both foot-mounted and flange-mounted motors can be fitted with a silencer to reduce the noise level by about 10 dB(A). The silencer is painted blue and is made of 2 mm steel sheet. The sound absorbing material is 40 mm thick polyurethane foam. On the underside there is a rubber strip to seal against the floor. The silencer fits loosely over the motor.

Dimensions of silencers on request.

1) If connections to the motor or control gear require it, an opening can be made in the extension of the silencer or it can be removed.

General purpose steel motors in brief, basic design

Motor frame size			280	315	355	400
Stator	Material Paint colour shade Paint thickness		Profile-pressed sheet steel Blue, Munsell 8B 4.5/3.25 (NCS 4822-B05G) / RAL 5014 Two-pack epoxy paint, thickness ≥ 70 µm			
Bearing end shields	Material Paint colour shade Paint thickness		Cast iron EN-GJL-200 or spheroidal graphit EN-GJS-400 Blue, Munsell 8B 4.5/3.25 (NCS 4822-B05G) / RAL 5014 Two-pack epoxy paint, thickness ≥ 70 µm			
Bearings	D-end	2-pole 4-12 poles	6316/C4 6316/C3	6316/C4 6319/C3	6316M/C4 6322/C3	6317M/C4 6322/C3
	N-end	2-pole 4-12 poles	6316/C4 6316/C3	6316/C4 6316/C3	6316M/C4 6319/C3	6317M/C4 6319/C3
Axially-locked bearings	Inner bearing cover		As standard, locked at D-end			
Bearing seal			V-ring as standard, radial seal on request			
Lubrication			Regreasing nipples, M10x1 Grease for bearing temperatures -30°C to +120°C			
SPM-nipples			On request			
Rating plate			Acid proof stainless steel AISI 316, thickness 0.6 mm, with individual serial number			
Terminal box	Frame material Cover material Cover screw material		Cast iron EN-GJL-150 Cast iron EN-GJL-150 Steel 5G, coated with sinc and yellow cromated			
Connections	Cable entries	2-4 pole 6-8 pole	2 x M63 2 x M63	2 x M63 2 x M63	2 x Ø60/80 2 x Ø60	2 x Ø80 2 x Ø60/80
	Terminals		6 terminals for connection with cable lugs (not included)			
Fan	Material		Reinforced glassfiber laminate, aluminium or polypropylene with metal hub			
Fan cover	Material Paint colour shade Paint thickness		Sheet steel Blue, Munsell 8B 4.5/3.25 (NCS 4822-B05G) / RAL 5014 Two-pack epoxy polyester paint, thickness ≥ 80 µm			
Stator winding	Material Insulation		Copper Insulation class F; temperature rise class B unless otherwise stated.			
	Winding protection		PTC-thermistors 150°C, 3 in series, as standard			
Rotor winding	Material		Pressure die-cast aluminium			
Balancing method			Half key balancing as standard			
Key ways			Open key way			
Heating elements	On request		50 W	1 x 65 W	2 x 65 W	2 x 65 W
Drain holes			As standard, open on delivery			
Enclosure			IP 55, higher protection on request			
Cooling method			IC 411			

3

3

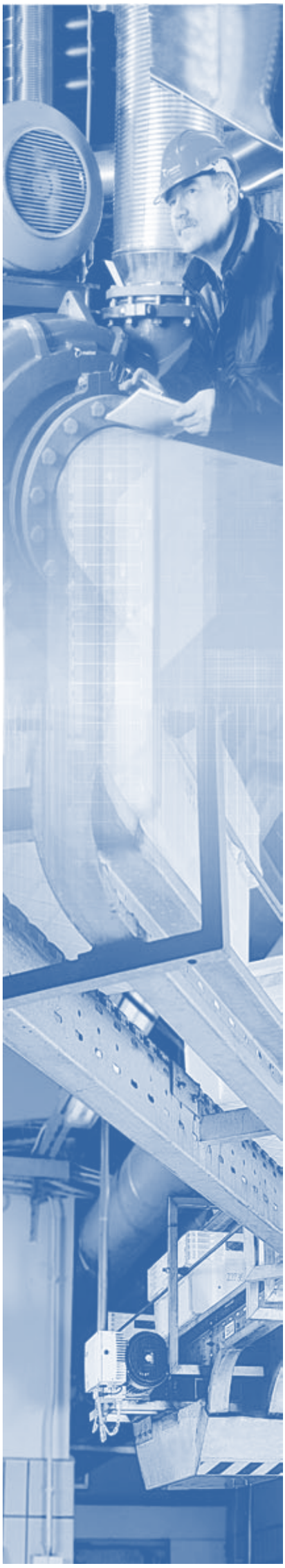

General Purpose Cast Iron Motors

Totally enclosed squirrel cage three phase low voltage motors,
Sizes 71 - 355, 0.25 to 250 kW

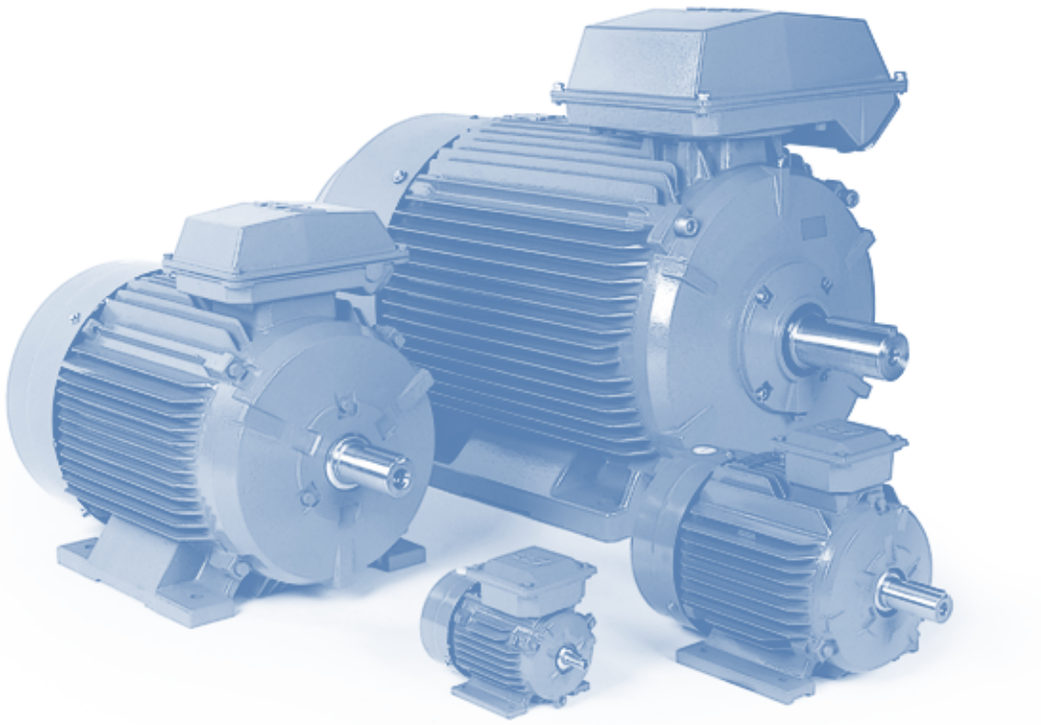

4

www.abb.com/motor&drives

> Motors

> Low voltage motors

> General purpose motors

Mechanical design 114

Ordering information 121

Technical data 122

Variant codes 130

Dimension drawings 133

Rating plates 142

Construction 143

Cast iron motors in brief 144

Mechanical design

Stator

The motor frame including feet, bearing housing and terminal box is made of cast iron. Integrally cast feet allow a very rigid mounting and minimal vibration.

Motors can be supplied for foot mounting, flange mounting and combinations of these.

Drain holes

Motors, frame sizes 280 to 355, are fitted with drain holes and closable plugs. The plugs are open on delivery. When mounting the motors, ensure that the drain holes face downwards.

In the case of vertical mounting, the upper plug must be hammered home completely. In very dusty environments, both plugs should be hammered home.

Drain holes for motors IEC frame sizes 71 to 250 are available as modification.

Drain holes for motors IEC-frame sizes 280 to 355

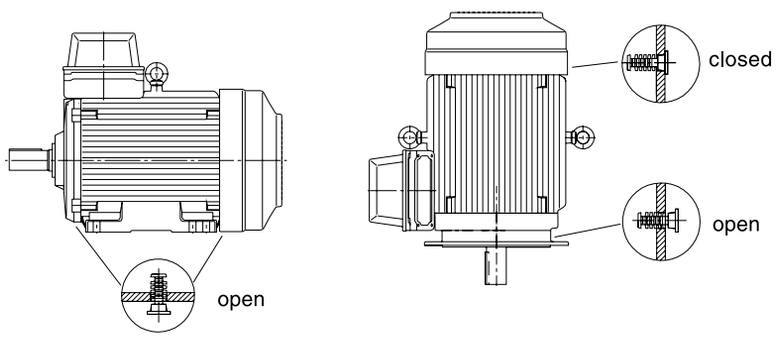

4

Terminal boxes

Terminal boxes are mounted on top of the motor as standard. The terminal box can also be mounted on the left or right side, see ordering information.

The terminal box of motor sizes 71 to 250 can be turned 4x90° and in motors sizes 280 to 355 rotated 2x180° to allow cable entry from either side of the motor.
Degree of protection of standard terminal box is IP 55.

The terminal boxes in sizes 280 to 355 are equipped with cable glands or cable boxes as standard.

Terminations are suitable for Cu- and Al-cables. Cables are connected to the terminals by cable lugs which are not included with the motor.

To enable the supply of suitable terminations for the motor, please state cable type, quantity and size when ordering. Non-standard design of terminal boxes; e.g. size, degree of protection, are available as options.

Please see variant codes for options.

Terminal box examples

Motor sizes 71 to 132

Motor sizes 160 to 250

Motor sizes 280 to 355, provided either with a cable gland or a cable box.

Terminal boxes and cable entries

If no ordering information of the cable is given, it is assumed to be p.v.c.-insulated and termination parts are supplied according to the table below.

In motor sizes 280 to 355 the terminal box is equipped with cable glands or cable boxes as standard.

To enable the supply of suitable terminations for the motor, please state cable type, quantity and size when ordering.

The table below shows the different alternatives available for cable boxes and cable entries. Other types on request.

Cast iron motor sizes 71 to 250 with top-mounted terminal box

Motor size	Poles	Cable entry mm
71M	2,4,6	2xM16×1.5
80M	2,4,6	2xM25×1.5
90S	2,4,6	2xM25×1.5
90L	2,4,6	2xM25×1.5
100L	2,4,6,8	2xM32×1.5
112M	2,4,6,8	2xM32×1.5
132S	2,4,6,8	2xM32×1.5
132M	2,4,6,8	2xM32×1.5

Motor size	Poles	Cable entry mm
160M	2,4,6,8	2xM40×1.5
160L	2,4,6,8	2xM40×1.5
180M	2,4,6,8	2xM40×1.5
180L	2,4,6,8	2xM40×1.5
200L	2,4,6,8	2xM50×1.5
225S	4,6,8	2xM50×1.5
225M	2,4,6,8	2xM50×1.5
250M	2,4,6,8	2xM63×1.5

Cable entries for thermistors: 1xM16x1.5 (type 160 to 250)

Cast iron motor sizes 280 to 355 with top-mounted terminal box

Motor size	Terminal box	Flange opening	Flange	Cable gland	Cable entry	Cable diameter	Auxiliary entries	Terminal bolt
3000 r/min (2 poles)								
280 SM_	122/2	C	3GZF 294 730-749	3GZF 294 730-613	2 x M63	2 x Ø32-49	2 x M20	M8
315 SM_, ML_	142/1	D	3GZF 294 730-753	3GZF 294 730-613	2 x M63	3 x Ø32-49	2 x M20	M10
355 S	162/1	E-D	3GZF 294 730-753	3GZF 294 730-613	2 x M63	3 x Ø32-49	2 x M20	M12
1500 r/min (4 poles)								
280 SM_	122/2	C	3GZF 294 730-749	3GZF 294 730-613	2 x M63	2 x Ø32-49	2 x M20	M8
315 SM_, ML_	142/1	D	3GZF 294 730-753	3GZF 294 730-613	2 x M63	3 x Ø32-49	2 x M20	M10
355 S	162/1	E-D	3GZF 294 730-753	3GZF 294 730-613	2 x M63	3 x Ø32-49	2 x M20	M12
1000 r/min (6 poles)								
280 SM_	122/2	C	3GZF 294 730-749	3GZF 294 730-613	2 x M63	2 x Ø32-49	2 x M20	M8
315 SM_, ML_	142/1	D	3GZF 294 730-753	3GZF 294 730-613	2 x M63	3 x Ø32-49	2 x M20	M10
355 S	142/2	D	3GZF 294 730-753	3GZF 294 730-613	2 x M63	3 x Ø32-49	2 x M20	M10
750 r/min (8 poles)								
280 SM_	122/2	C	3GZF 294 730-749	3GZF 294 730-613	2 x M63	2 x Ø32-49	2 x M20	M8
315 SM_, ML_	142/1	D	3GZF 294 730-753	3GZF 294 730-613	2 x M63	3 x Ø32-49	2 x M20	M10
355 S	142/2	D	3GZF 294 730-753	3GZF 294 730-613	2 x M63	3 x Ø32-49	2 x M20	M10

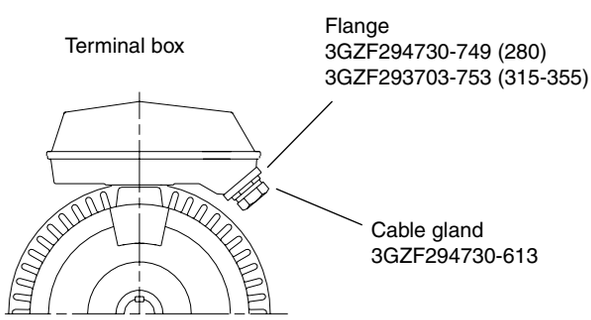

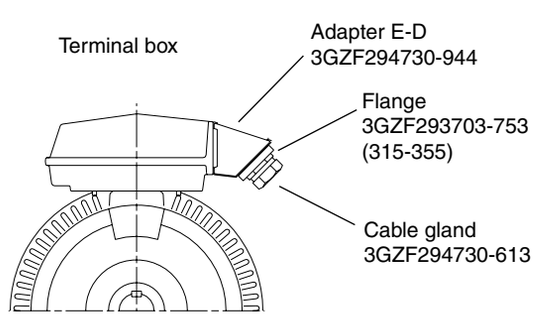

Alternatives for cable entries and cable boxes for motor sizes 280 to 355

Motor size	Terminal box on top	on side	Opening type (D/Y-conn.)	Max. rated current A mm²	Max connection cable area	Cable gland diameter	Auxliary cable entries	Cable box diameter	Blank plate
280	122/2	NA	C	363/210	2 x 150	2 x M40-63	2 x M20	max 2xØ60	MKLN 20
315	142/1	NA	D	640/370	2 x 240	1 x M40-63	2 x M20	max 2xØ60	MKLN 30
355	142/2		D	640/370	2 x 240	2 x M40-63	2 x M20	max 2xØ80	
	162/1		E-D	950/550	4 x 240			max 4xØ60	

Flange

Opening	Adapter 3GZF	c	e	f	g	d
C		62	193	62	193	M8
D		100	300	80	292	M10
E		100	300	80	292	M10
E-D	294730-944	100	300	80	292	M10

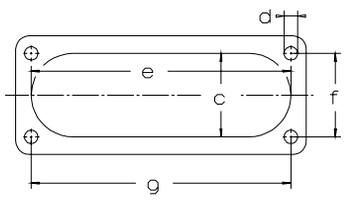

Bearings

The motors are normally fitted with single-row deep groove ball bearings as listed in the table below.

When there are high axial forces, angular-contact ball bearings should be used. This option is available on request.

When a motor with angular-contact ball bearings is ordered, the method of mounting and direction and magnitude of the axial force must be specified. For special bearings, please see the variant codes.

4

Basic version with deep groove ball bearings

Motor size	Number of poles	Deep groove ball bearings D-end	N-end
71M	2-6	6202 VV C3	6202 VV C3
80M	2-6	6204 DDU C3	6204 DDU C3
90S	2-6	6205 DDU C3	6205 DDU C3
90L	2-6	6205 DDU C3	6205 DDU C3
100L	2-8	6206 DDU C3	6206 DDU C3
112M	2-8	6207 DDU C3	6206 DDU C3
132S	2-8	6208 DDU C3	6207 DDU C3
132M	2-8	6208 DDU C3	6207 DDU C3
160M	2-8	6309 DDU C3	6209 DDU C3
160L	2-8	6309 DDU C3	6209 DDU C3

Motor size	Number of poles	Deep groove ball bearings D-end	N-end
180M	2-8	6310 DDU C3	6210 DDU C3
180L	2-8	6310 DDU C3	6210 DDU C3
200L	2-8	6312 DDU C3	6212 DDU C3
225S	4-8	6313 ZZ C3	6213 ZZ C3
225M	2-8	6313 ZZ C3	6213 ZZ C3
250M	2-8	6314/C3	6214/C3
280	2	6316/C4	6316/C4
	4-12	6316/C3	6316/C3
315	2	6316/C4	6316/C4
	4-12	6319/C3	6316/C3
355	2	6316/C3	6316/C3
	4-12	6322/C3	6319/C3

Axially-locked bearings

The D-end bearing is locked, in sizes 71 to 180 with the spring ring and in sizes 200 to 355 with the inner bearing cover. The inner ring is locked by tight tolerance to the shaft.

Transport locking

Motors that have roller bearings or an angular contact ball bearing are fitted with a transport lock before despatch to prevent damage to the bearings during transport. In case of transport locked bearing, motor sizes 280 to 355 are provided with a warning sign.

Locking may also be fitted in other cases where transport conditions are suspected of being potentially damaging.

Bearing seals

The motors are as standard provided with seals according to table below.

Motor size	Description D-end	**Standard design** **Axial seal** N-end		**Alternative design** **Radial seal (DIN 3760)** Variant code 072	Number of poles	d_1	d_2	B_1	b
71 to 132	Sealed bearings (2RS) and axial seal, gamma ring, at D-end								
160 to 225	Axial seal, gamma ring, at D-end								
250	Radial seal at D-end								
280	Axial seals at both ends	VS 80 VS 80	VS 80 VS 80	80x100x10[1)] 80x100x10	2 4-12	80 80	100 100	13.5 13.5	10 10
315	Axial seals at both ends	VS 80 VS 95	VS 80 VS 80	80x100x10[1)] 95x120x12	2 4-12	80 95	100 120	13.5 13.5	10 12
355	Axial seals at both ends	VS 80 VS 110	VS 80 VS 95	80x100x10[1)] 110x140x12[1)]	2 4-12	80 110	100 140	13.5 15.5	10 12

[1)] Viton-seal

Motor sizes 71-132

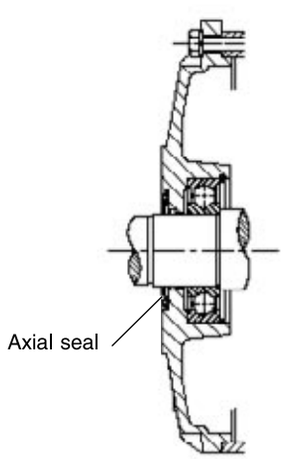

Motor sizes 160-225

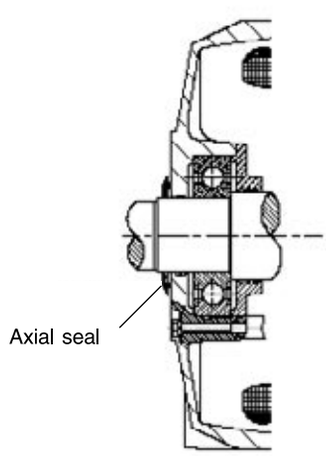

Motor size 250

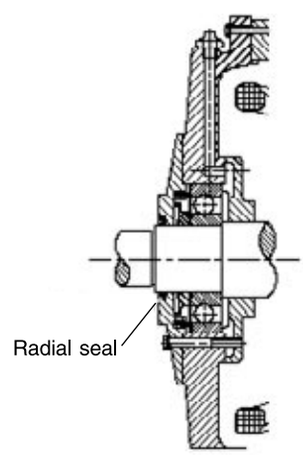

Motor sizes 280-355

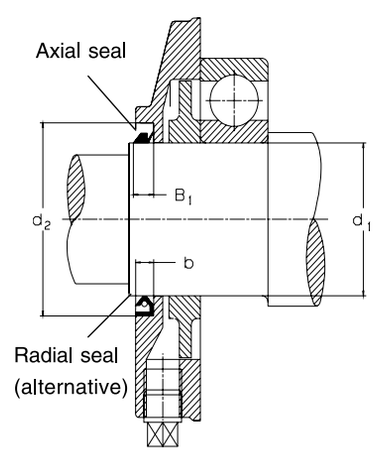

Bearing life

The nominal life L_{10} of a bearing is defined according to ISO as the number of operating hours achieved or exceeded by 90% of identical bearings in a large test series under certain specified conditions. 50% of the bearings achieve at least five times this figure.

The calculated bearing life L_{10} for power transmission by means of a coupling (horizontal machine):

Motor sizes 280 to 355 200,000 hours.

Lubrication

On delivery, the motors are lubricated with a type of grease intended for use in dry or humid environments, at normal ambient temperature.

Standard versions of motors 71 to 225 are lubricated for life, with lithium based grease.

Motors 160 to 225 are available with either permanent greased or, as against variant codes, with regreasable bearings.

Motors 250 to 355 have grease value lubrication for lubrication in service. The lubrication intervals and quantity are stated in the maintenance manual which comes with the motor.

Pulley diameter

When the desired bearing life has been determined, the minimum permissible pulley diameter can be calculated with FR (or FRX), according to the formula:

$$D = \frac{1.9 \cdot 10^7 \cdot K \cdot P}{N \cdot F_R}$$

Where:

D = diameter of pulley, mm
P = power requirement, kW
N = motor speed, r /min
K = belt tension factor, dependent on belt type and type of duty. A common value for V belts is K= 2.5
F_R = permissible radial force

Permissible loadings on shaft

4

The tables below give the permissible radial force in Newtons,assuming zero axial force. The values are based on normal conditions at 50 Hz and calculated bearing lives of 20,000 and 40,000 hours.

Motors are foot-mounted IM B3 version with force directed sideways. In some cases the strength of the shaft affects the permissible forces.

At 60 Hz the values must be reduced by 10 %.

If the radial force is applied between points X_0 and X_{max}, the permissible force F_R can be calculated from the following formula:

$$F_R = F_{X0} - \frac{X}{E} (F_{X0} - F_{Xmax})$$

E = length of shaft extension in basic version

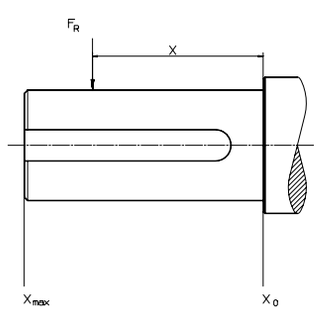

Permissible radial forces

Motor size	Poles	Length of shaft extension E (mm)	**Radial forces Ball bearings 20,000 hours** X_0 (N)	FX_{max} (N)	**40,000** X_0 (N)	X_{max} (N)
71 M	2	30	381	322	303	256
	4	30	480	405	381	322
	6	30	555	469	441	372
80 M	2	40	624	509	495	404
	4	40	788	643	626	511
	6	40	907	740	720	587
	8	40	997	813	791	646
90 S	2	40	686	542	545	430
	4	40	870	687	690	545
	6	40	1000	790	794	627
	8	40	1095	866	870	687

Permissible radial forces

Motors size	Poles	Length of shaft extension E (mm)	Radial forces Ball bearings 20,000 hours X_0 (N)	FX_{max} (N)	40,000 X_0 (N)	X_{max} (N)
90 L	2	50	696	564	553	448
	4	50	885	717	702	569
	6	50	1015	823	806	653
	8	50	1112	901	883	715
100 L	2	60	979	785	777	622
	4	60	1234	989	979	785
	6	60	1419	1137	1126	903
	8	60	1566	1255	1243	996
112 M	2	60	1258	1014	998	805
	4	60	1592	1284	1264	1019
	6	60	1831	1477	1453	1172
	8	60	2020	1629	1603	1293
132 S	2	80	1435	1122	1139	890
	4	80	1821	1423	1445	1130
	6	80	2079	1625	1650	1290
	8	80	2299	1797	1825	1427
132 M	4	80	1840	1476	1461	1172
	6	80	2107	1690	1672	1341
	8	80	2329	1869	1849	1483
160 M	2	110	1544	1200	1226	952
	4	110	1948	1513	1546	1201
	6	110	2232	1734	1772	1377
	8	110	2465	1916	1957	1520
160L	2	110	1563	1243	1240	987
	4	110	1971	1568	1565	1244
	6	110	2259	1797	1793	1426
	8	110	2495	1984	1980	1575
180M	2	110	2984	2371	2368	1882
	4	110	3759	2988	2984	2371
180L	4	110	3802	3073	3017	2439
	6	110	4352	3518	3454	2792
	8	110	4800	3881	3810	3080
200L	2	110	4090	3377	3246	2680
	4	110	5162	4262	4097	3383
	6	110	5909	4879	4690	3872
	8	110	6518	5382	5173	4272
225S	4	140	5763	4526	4574	4593
	8	140	7261	5703	5763	4526
225M	2	110	4591	3811	3644	3025
	4	110	5791	4594	4596	3646
	6	110	6644	5271	5273	4184
	8	110	7296	5788	5791	4594
250M	2	140	5112	4170	4057	3310
	4	140	6440	5254	5111	4170
	6	140	7388	6027	5864	4784
	8	140	8113	6619	6439	5253
280SM_	2	140	7300	6200	5800	4900
	4	140	9200	7800	7300	6200
	6	140	10600	8900	8400	7100
	8	140	11600	9800	9200	7800
315SM_	2	140	7300	6000	5800	4950
	4	170	11300	9400	9000	7500
	6	170	13000	10600	10300	8500
	8	170	14300	10400	11300	9400
315ML	2	140	7300	6000	5800	4950
	4	140	11300	9400	9000	7500
	6	140	13000	10600	10300	8500
	8	140	14300	10400	11300	9400
355 S_	2	140	7400	6400	5100	5800
	4	210	15200	12500	12000	9850
	6	210	17300	14200	13700	11300
	8	210	19000	15600	15200	12400

Permissible axial forces

The following tables give the permissible axial forces in Newton, assuming zero radial force. The values are based on normal conditions at 50 Hz with standard bearings and calculated bearing lives of 20,000 and 40,000 hours.
Motors are foot-mounted IM B3 version.

At 60 Hz the values are to be reduced by 10%.

Mounting arrangement IM B3

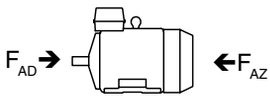

Motor size	20,000 hours 2-pole F_{AD} N	2-pole F_{AZ} N	4-pole F_{AD} N	4-pole F_{AZ} N	6-pole F_{AD} N	6-pole F_{AZ} N	8-pole F_{AD} N	8-pole F_{AZ} N	40,000 hours 2-pole F_{AD} N	2-pole F_{AZ} N	4-pole F_{AD} N	4-pole F_{AZ} N	6-pole F_{AD} N	6-pole F_{AZ} N	8-pole F_{AD} N	8-pole F_{AZ} N
71	270	270	360	360	440	440	-	-	200	200	270	270	320	320	-	-
80	430	430	590	590	710	710	800	800	320	320	440	440	530	530	600	600
90	470	470	650	650	780	780	870	870	350	350	470	470	580	580	650	650
100	650	650	880	880	1060	1060	1200	1200	480	480	650	650	780	780	890	890
112	840	840	1160	1160	1380	1380	1570	1570	620	620	850	850	1020	1020	1170	1170
132 S_	950	950	1300	1300	1540	1540	1760	1760	690	690	960	960	1140	1140	1310	1310
132 M_	-	-	1300	1300	1540	1540	1760	1760	-	-	950	950	1140	1140	1310	1310
160	1020	1020	1380	1380	1650	1650	1880	1880	740	740	1020	1020	1210	1210	1390	1390
180M	1970	1970	2660	2660	-	-	-	-	1440	1440	1970	1970	-	-	-	-
180L	-	-	2660	2660	3200	3200	3620	3620	-	-	1970	1970	2350	2350	2670	2670
200	2570	2570	3490	3490	4200	4200	4750	4750	1890	1890	2580	2580	3080	3080	3500	3500
225S	-	-	3900	3900	-	-	5310	5310	-	-	2880	2880	-	-	3900	3900
225M	2870	2870	3900	3900	4720	4720	5310	5310	2120	2120	2880	2880	3460	3460	3900	3900
250	3220	3220	4380	4380	5290	5290	5960	5960	2380	2380	3220	3220	3880	3880	4380	4380
280	7300	5300	8000	6000	9000	7000	10000	8000	5750	3750	6200	4200	6900	4900	7700	5700
315	7000	5000	9000	7000	10600	8600	11600	9600	5600	3600	6900	4900	7900	5900	8900	6900
355	8000	4000	13500	6500	15300	8300	16800	9800	6500	2500	10800	3800	12000	5000	13300	6300

Mounting arrangement IM V1

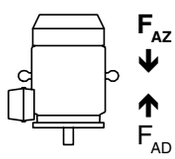

Motor size	20,000 hours 2-pole F_{AD} N	2-pole F_{AZ} N	4-pole F_{AD} N	4-pole F_{AZ} N	6-pole F_{AD} N	6-pole F_{AZ} N	8-pole F_{AD} N	8-pole F_{AZ} N	40,000 hours 2-pole F_{AD} N	2-pole F_{AZ} N	4-pole F_{AD} N	4-pole F_{AZ} N	6-pole F_{AD} N	6-pole F_{AZ} N	8-pole F_{AD} N	8-pole F_{AZ} N
71	280	260	380	350	450	420	-	-	210	190	280	250	340	310	-	-
80	450	410	620	560	740	560	830	770	340	300	460	410	550	500	620	560
90	500	440	590	600	820	730	920	830	380	320	510	440	620	530	690	600
100	710	590	950	800	1140	980	1280	1110	530	420	720	560	860	700	970	800
112	920	770	1260	1050	1490	1270	1680	1470	690	540	950	740	1130	910	1270	1060
132 S_	1050	830	1450	1160	1690	1400	1930	1600	800	570	1100	810	1280	990	1470	1140
132 M_	-	-	1480	1120	1730	1320	1950	1580	-	-	1130	770	1320	910	1490	1120
160 M_	1240	750	1670	1100	1960	1340	2140	1560	970	480	1300	730	1530	900	1650	1070
160 L_	1320	710	1730	1030	2050	1250	2260	1500	1050	440	1370	670	1610	820	1770	1010
180 M_	2320	1630	3100	2230	-	-	-	-	1780	1100	2400	1540	-	-	-	-
180 L_	-	-	3170	2150	3750	2650	4160	3100	-	-	2480	1460	2900	1800	3200	2140
200	3050	2050	4100	2880	4830	3510	5450	4060	2370	1370	3180	1970	3700	2390	4200	2800
225 S_	-	-	4680	3130	-	-	6120	4500	-	-	3650	2100	-	-	4720	3090
225 M_	3570	2180	4770	3040	5650	3790	6250	4370	2810	1420	3740	2020	4390	2530	4850	2960
250	4090	2360	5570	3180	6520	4070	7210	4700	3240	1520	4420	2030	5100	2650	5630	3120
280	8500	4300	9500	4600	11000	5500	12200	6600	6950	2700	7700	2800	8900	3350	9750	4200
315 SM_	9000	3700	11600	5400	13500	6200	14500	7500	7450	2100	9450	3200	10900	3650	11900	4650
315 ML_	9600	3400	12400	5000	14800	5600	16200	7000	8100	1850	10100	2850	12200	3150	13200	4150
355 S_	10900	2000	18500	3800	21200	5000	23000	6800	8500	500	15700	1000	18000	1750	19400	3100

Ordering information

When placing an order, please state the following minimum data in the order, as in the example.

The product code of the motor is composed in accordance with the following example.

Motor type	M2QA 90S4A
Pole number	4
Mounting arrangement (IM-code)	IM B3 (IM 1001)
Rated output	1.1 kW
Product code	3GQA092101-ADA
Variant codes if needed	

A	B	C	D, E, F	G
M2QA	**90S4A**	**3GQA 092 101 -**	**AD A**	**003 etc.**
		1-4 5-6 7 8-10 11	12 13 14	

A Motor type
B Motor size
C Product code
D Mounting arrangement code
E Voltage and frequency code
F Generation code
G Variant codes

Explanation of the product code (C, D, E, F):

Positions 1 to 4
3GQA = Totally enclosed fan cooled squirrel cage motor with cast iron frame

Positions 5 and 6
IEC frame

07 = 71	**11** = 112	**20** = 200	**31** = 315
08 = 80	**13** = 132	**22** = 225	**35** = 355
09 = 90	**16** = 160	**25** = 250	
10 = 100	**18** = 180	**28** = 280	

Position 7
Speed (Pole pairs)

1 = 2 poles	**6** = 12 poles
2 = 4 poles	**7** = >12 poles
3 = 6 poles	**8** = Two-speed motors
4 = 8 poles	**9** = Multi-speed motors
5 = 10 poles	

Positions 8 to 10
Serial number

Position 11
- (dash)

Position 12
Mounting arrangement
A = Foot-mounted, top-mounted terminal box
R = Foot-mounted, terminal box on RHS, seen from D-end
L = Foot-mounted, terminal box on LHS, seen from D-end
B = Flange-mounted, large flange
C = Flange-mounted, small flange sizes (71-112)
H = Foot- and flange-mounted

Position 13
Voltage and frequency code
See tables on appropriate page

Position 14
Generation code
A, B, C…

The product code must be, if needed, followed by variant codes.

4

Code letters for supplementing the product code for voltage and frequency:

A	B	D	E	F	H
380 VY 50 Hz	380 V 50 Hz	380-420 V 50 Hz 660-690 VY 50 Hz 440-480[1] V 60 Hz	500 V 50 Hz 575 V 60 Hz	500 VY 50 Hz 575 VY 60 Hz	415 V 50 Hz

S	T	U	X	
220-240 V 50 Hz 380-420 VY 50 Hz 440-480 VY 60 Hz	660 V 50 Hz	690 V 50 Hz	Other rated voltage, connection or frequency, max. 690 V	[1] 480 V not stamped on sizes 160 to 250

General purpose cast iron motors

Technical data for totally enclosed squirrel cage three phase motors

IP 55 – IC 411 – Insulation class F, temperature rise class B

Output kW		Motor type		Product code		Speed r/min	Efficiency Full load 100%	Efficiency 3/4 load 75%	Power factor cos 100%	Current I_N A	Current I_s/I_N	Torque T_N Nm	Torque T_s/T_N	Torque T_{max}/T_N
3000 r/min = 2-poles						**400 V 50 Hz**				**Basic design**				
0.37		**M2QA**	**71 M2A**	3GQA	071 301-••A	2780	70.0	68.0	0.81	0.94	6.1	1.27	2.2	3.0
0.55		**M2QA**	**71 M2B**	3GQA	071 302-••A	2785	73.0	72.4	0.82	1.33	6.1	1.89	2.2	2.7
0.75		**M2QA**	**80 M2A**	3GQA	081 301-••A	2840	75.0	75.5	0.85	1.7	6.1	2.52	2.2	3.0
1.1		**M2QA**	**80 M2B**	3GQA	081 302-••A	2855	78.0	77.9	0.85	2.4	7.0	3.68	2.2	2.2
1.5		**M2QA**	**90 S2A**	3GQA	091 101-••A	2850	79.0	79.0	0.87	3.15	7.0	5.03	2.2	2.5
2.2		**M2QA**	**90 L2A**	3GQA	091 501-••A	2850	81.5	81.8	0.86	4.53	7.0	7.37	2.2	3.5
3		**M2QA**	**100 L2A**	3GQA	101 501-••A	2860	83.0	83.2	0.88	5.93	7.0	10.02	2.2	3.0
4		**M2QA**	**112 M2A**	3GQA	111 301-••A	2900	85.0	84.6	0.9	7.55	7.0	13.17	2.2	3.2
5.5		**M2QA**	**132 S2A**	3GQA	131 101-••A	2920	87.5	87.9	0.89	10.2	7.0	17.99	2.2	3.0
7.5		**M2QA**	**132 S2B**	3GQA	131 102-••A	2920	88.5	90.1	0.9	13.6	7.0	24.53	2.2	3.5
11		**M2QA**	**160 M2A**	3GQA	161 301-••A	2930	90.0	90.5	0.89	19.82	6.5	35.85	2.5	3.1
15		**M2QA**	**160 M2B**	3GQA	161 302-••A	2920	90.0	90.1	0.89	27.03	6.5	49.06	2.5	2.6
18.5		**M2QA**	**160 L2A**	3GQA	161 501-••A	2930	90.5	90.9	0.9	32.78	6.5	60	2.5	2.7
22		**M2QA**	**180 M2A**	3GQA	181 301-••A	2940	90.8	91.0	0.9	38.86	6.5	71	2.3	2.5
30		**M2QA**	**200 L2A**	3GQA	201 501-••A	2955	91.4	91.1	0.9	52	6.5	96	2.2	2.6
37		**M2QA**	**200 L2B**	3GQA	201 502-••A	2955	92.2	91.8	0.9	64	6.5	119	2.3	2.6
45		**M2QA**	**225 M2A**	3GQA	221 301-••A	2970	92.6	92.2	0.89	78	7.0	144	2.5	2.7
55		**M2QA**	**250 M2A**	3GQA	251 301-••A	2960	93.4	91.7	0.89	96	7.5	177	2.4	2.7
75		**M2BAT**	**280 SMA**	3GBA	281 210-••D	2974	94.1	93.6	0.87	134	6.7	241	1.7	2.6
90	2)	**M2BAT**	**280 SMB**	3GBA	281 220-••D	2970	94.5	94.2	0.89	156	6.4	289	1.7	2.5
110		**M2BAT**	**315 SMA**	3GBA	311 210-••D	2979	94.1	93.4	0.85	198	6.3	353	1.5	2.5
132	2)	**M2BAT**	**315 SMB**	3GBA	311 220-••D	2977	94.7	94.1	0.87	232	6.3	423	1.7	2.5
160	2)	**M2BAT**	**315 SMC**	3GBA	311 230-••D	2976	95.1	94.8	0.88	273	6.2	513	1.7	2.4
200	2)	**M2BAT**	**315 MLA**	3GBA	311 410-••D	2980	95.7	95.3	0.88	345	7.9	641	2.6	3.1
250		**M2BAT**	**355 S**	3GBA	351 100-••D	2983	95.7	95.3	0.89	424	6.8	800	1.5	2.8
3000 r/min = 2-poles						**400 V 50 Hz**				**High-output design**				
5.5	1)	**M2QA**	**112 L2 A**	3GQA	111 501-••A	2900	82.0		0.9	10.76	7.0	18.1	2.0	2.1
9.2	1)	**M2QA**	**132 M2A**	3GQA	131 301-••B	2910	85.5		0.88	17.65	7.5	30.2	2.0	2.2
11	1)	**M2QA**	**132 M2B**	3GQA	131 302-••B	2900	88.0		0.9	20.05	8.0	36.2	2.2	2.2
22	1)	**M2QA**	**160 L2B**	3GQA	161 502-••A	2930	88.0		0.9	40.09	6.5	71	2.3	2.8
30	1)	**M2QA**	**180 L2A**	3GQA	181 501-••A	2950	90.8		0.9	53	6.5	97	2.3	2.8
45	1)	**M2QA**	**200 L2C**	3GQA	201 503-••A	2955	92.0		0.9	78	7.0	145	2.2	2.6
55	1)	**M2QA**	**225 M2B**	3GQA	221 302-••A	2975	92.6		0.89	96	7.0	177	2.5	2.8
75	1)	**M2QA**	**250 M2B**	3GQA	251 302-••A	2970	91.0		0.89	134	7.0	241	2.4	2.8
110	2)	**M2BAT**	**280 SMC**	3GBA	281 230-••D	2973	95.0	94.8	0.9	187	6.7	353	1.9	2.6

[1] Temperature rise class F by voltage 400 V 50 Hz.

[2] Temperature rise class F by voltage 380 V 50 Hz.

Missing data on request.

The two bullets in the product code indicate choice of mounting arrangement, voltage and frequency (see ordering information page).

General purpose cast iron motors

Technical data for totally enclosed squirrel cage three phase motors

IP 55 – IC 411 – Insulation class F, temperature rise class B

Output kW		Motor type		Speed r/min	Effi-ciency %	Power factor cos	Current I_N A	Speed r/min	Effi-ciency %	Power factor cos	Current I_N A	Moment of inertia J=1/4 GD² kgm²	Weight kg	Sound pressure level L_P dB(A)
3000 r/min = 2-poles				**380 V 50 Hz**				**415 V 50 Hz**				**Basic design**		
0.37		**M2QA**	**71 M2A**	2765	70.0	0.83	0.97	2795	70.0	0.79	0.93	0.0003	10	56
0.55		**M2QA**	**71 M2B**	2780	73.0	0.84	1.37	2800	73.0	0.79	1.33	0.00037	11	56
0.75		**M2QA**	**80 M2A**	2825	75.5	0.86	1.75	2855	75.0	0.85	1.64	0.00091	16	57
1.1		**M2QA**	**80 M2B**	2840	77.5	0.86	2.52	2870	78.0	0.83	2.37	0.00107	17	58
1.5		**M2QA**	**90 S2A**	2835	79.0	0.9	3.23	2865	79.0	0.86	3.08	0.00135	21	61
2.2		**M2QA**	**90 L2A**	2835	81.5	0.89	4.61	2865	81.0	0.83	4.56	0.00163	24	61
3		**M2QA**	**100 L2A**	2845	83.0	0.9	6.14	2875	83.5	0.86	5.85	0.00402	33	65
4		**M2QA**	**112 M2A**	2885	85.0	0.92	7.82	2915	85.0	0.87	7.53	0.00671	42	67
5.5		**M2QA**	**132 S2A**	2905	87.5	0.9	10.7	2935	88.0	0.88	9.94	0.01241	58	70
7.5		**M2QA**	**132 S2B**	2905	87.5	0.9	14.5	2935	89.0	0.9	13.1	0.01491	63	70
11		**M2QA**	**160 M2A**	2918	90.0	0.91	20.41	2930	90.0	0.87	19.54	0.0436	112	72
15		**M2QA**	**160 M2B**	2917	90.0	0.91	27.82	2932	90.0	0.88	26.35	0.0551	122	72
18.5		**M2QA**	**160 L2A**	2920	90.5	0.91	34.13	2935	90.5	0.89	31.95	0.06549	142	72
22		**M2QA**	**180 M2A**	2940	90.8	0.91	40.45	2955	90.8	0.88	38.3	0.08805	170	72
30		**M2QA**	**200 L2A**	2950	91.2	0.91	54	2960	91.3	0.89	51	0.14821	235	81
37		**M2QA**	**200 L2B**	2950	91.7	0.91	67	2960	92.3	0.89	62	0.16822	254	81
45		**M2QA**	**225 M2A**	2965	92.2	0.90	82	2975	92.6	0.87	77	0.29345	328	81
55		**M2QA**	**250 M2A**	2956	93.2	0.90	100	2962	93.5	0.88	93	0.3784	390	84
75		**M2BAT**	**280 SMA**	2970	94.0	0.88	137	2976	94.2	0.86	130	0.7	570	78
90	2)	**M2BAT**	**280 SMB**	2966	94.2	0.89	163	2974	94.6	0.88	151	0.82	610	78
110		**M2BAT**	**315 SMA**	2976	94.1	0.86	208	2980	94.1	0.83	197	1.05	820	83
132	2)	**M2BAT**	**315 SMB**	2974	94.5	0.87	243	2979	94.7	0.85	230	1.25	870	83
160	2)	**M2BAT**	**315 SMC**	2972	95.0	0.88	290	2978	95.2	0.88	265	1.5	960	83
200	2)	**M2BAT**	**315 MLA**	2978	95.6	0.89	358	2982	95.7	0.87	335	1.95	1130	83
250		**M2BAT**	**355 S**	2981	95.7	0.90	440	2984	95.7	0.88	412	2.7	1500	83
3000 r/min = 2-poles				**380 V 50 Hz**				**415 V 50 Hz**				**High-output design**		
5.5	1)	**M2QA**	**112 L2 A**									0.008263	49	70
9.2	1)	**M2QA**	**132 M2A**									0.014995	68	71
11	1)	**M2QA**	**132 M2B**									0.01768	73	73
22	1)	**M2QA**	**160 L2B**									0.06549	130	75
30	1)	**M2QA**	**180 L2A**									0.10339	185	75
45	1)	**M2QA**	**200 L2C**									0.18473	276	81
55	1)	**M2QA**	**225 M2B**									0.33431	340	81
75	1)	**M2QA**	**250 M2B**									0.45829	411	85
110	2)	**M2BAT**	**280 SMC**	2968	94.8	0.90	198	2975	95.1	0.89	180	1.05	660	78

1) Temperature rise class F by voltage 400 V 50 Hz.

2) Temperature rise class F by voltage 380 V 50 Hz.

Missing data on request.

4

General purpose cast iron motors

Technical data for totally enclosed squirrel cage three phase motors

IP 55 – IC 411 – Insulation class F, temperature rise class B

Output kW	Motor type		Product code		Speed r/min	Efficiency Full load 100%	Efficiency 3/4 load 75%	Power factor cos 100%	Current I_N A	Current $\frac{I_s}{I_N}$	Torque T_N Nm	Torque $\frac{T_s}{T_N}$	Torque $\frac{T_{max}}{T_N}$
1500 r/min = 4-poles					**400 V 50 Hz**				**Basic design**				
0.25	**M2QA**	**71 M4A**	3GQA	072 301-••A	1395	65.5	63.3	0.72	0.77	5.2	1.71	2.1	2.7
0.37	**M2QA**	**71 M4B**	3GQA	072 302-••A	1395	68.5	69.4	0.75	1.04	5.2	2.53	2.1	2.7
0.55	**M2QA**	**80 M4A**	3GQA	082 301-••A	1410	73.5	71.4	0.72	1.5	5.2	3.73	2.4	2.7
0.75	**M2QA**	**80 M4B**	3GQA	082 302-••A	1415	74.5	75.2	0.75	1.93	6.0	5.06	2.4	2.6
1.1	**M2QA**	**90 S4A**	3GQA	092 101-••A	1400	77.5	77.8	0.78	2.65	6.0	7.5	2.3	2.4
1.5	**M2QA**	**90 L4A**	3GQA	092 501-••A	1390	78.5	79.2	0.79	3.5	6.0	10.31	2.3	2.6
2.2	**M2QA**	**100 L4A**	3GQA	102 501-••A	1430	81.5	82.3	0.81	4.85	6.0	14.69	2.3	2.7
3	**M2QA**	**100 L4B**	3GQA	102 502-••A	1420	82.8	82.5	0.83	6.3	6.5	20.18	2.3	2.8
4	**M2QA**	**112 M4A**	3GQA	112 301-••A	1430	85.0	84.6	0.82	8.29	6.5	26.71	2.3	2.8
5.5	**M2QA**	**132 S4A**	3GQA	132 101-••A	1430	86.0	87.1	0.85	10.9	6.5	36.73	2.3	2.9
7.5	**M2QA**	**132 M4A**	3GQA	132 301-••A	1440	88.5	88.3	0.85	14.4	6.5	49.74	2.3	2.7
11	**M2QA**	**160 M4A**	3GQA	162 301-••A	1460	89.5	90.0	0.85	20.87	6.5	71	2.4	2.8
15	**M2QA**	**160 L4A**	3GQA	162 501-••A	1460	90.0	90.4	0.86	27.97	6.5	98	2.3	2.6
18.5	**M2QA**	**180 M4A**	3GQA	182 301-••A	1470	91.0	90.9	0.86	34.12	6.5	120	2.3	3.4
22	**M2QA**	**180 L4A**	3GQA	182 501-••A	1470	91.5	90.0	0.88	39.44	6.5	142	2.4	3.0
30	**M2QA**	**200 L4A**	3GQA	202 501-••A	1470	92.2	91.8	0.88	53	6.5	194	2.2	**2.9**
37	**M2QA**	**225 S4A**	3GQA	222 101-••A	1480	92.6	91.2	0.85	67	7.0	238	2.2	2.7
45	**M2QA**	**225 M4A**	3GQA	222 301-••A	1480	92.8	91.7	0.87	80	7.0	290	2.2	2.7
55	**M2QA**	**250 M4A**	3GQA	252 301-••A	1480	93.4	91.3	0.87	98	7.0	354	2.4	2.7
75 [2]	**M2BAT**	**280 SMA**	3GBA	282 210-••D	1483	94.2	94.2	0.83	138	6.3	483	2.1	2.6
90 [2]	**M2BAT**	**280 SMB**	3GBA	282 220-••D	1481	94.6	94.7	0.86	162	6.4	580	2.1	2.4
110 [2]	**M2BAT**	**315 SMA**	3GBA	312 210-••D	1486	94.6	94.2	0.84	203	6.4	707	1.7	2.3
132 [2]	**M2BAT**	**315 SMB**	3GBA	312 220-••D	1485	94.9	94.7	0.85	239	6.1	849	1.9	2.4
160 [2]	**M2BAT**	**315 SMC**	3GBA	312 230-••D	1486	95.4	95.2	0.85	286	6.7	1028	2.1	2.6
200 [2]	**M2BAT**	**315 MLA**	3GBA	312 410-••D	1485	95.7	95.6	0.86	354	6.4	1286	2.1	2.5
250	**M2BAT**	**355 S**	3GBA	352 100-••D	1488	95.6	95.3	0.85	448	6.7	1604	2.0	2.6
1500 r/min = 4-poles					**400 V 50 Hz**				**High-output design**				
5.5 [1]	**M2QA**	**112 L4A**	3GQA	112 501-••A	1430	84.0		0.83	11.39	7.0	36.7	2.2	2.2
9.2 [1]	**M2QA**	**132 M4B**	3GQA	132 302-••A	1430	84.0		0.85	18.6	6.5	61	2.2	2.2
11 [1]	**M2QA**	**132 M4C**	3GQA	132 303-••A	1430	84.5		0.85	22.11	6.5	73	2.2	2.2
18.5 [1]	**M2QA**	**160 L4B**	3GQA	162 502-••A	1460	87.0		0.86	35.69	6.5	121	2.2	2.4
30 [1]	**M2QA**	**180 L4B**	3GQA	182 502-••A	1470	89.0		0.88	55	6.5	195	2.2	2.6
37 [1]	**M2QA**	**200 L4B**	3GQA	202 502-••A	1470	89.2		0.88	68	6.5	240	2.2	2.6
55 [1]	**M2QA**	**225 M4B**	3GQA	222 302-••A	1480	91.0		0.87	100	7.0	355	2.3	2.4
75 [1]	**M2QA**	**250 M4B**	3GQA	252 302-••A	1480	90.4		0.87	137	7.0	484	2.3	2.4
110 [2]	**M2BAT**	**280 SMC**	3GBA	282 230-••D	1484	95.1	95.1	0.85	196	7.1	708	2.7	2.8

[1] Temperature rise class F by voltage 400 V 50 Hz.

[2] Temperature rise class F by voltage 380 V 50 Hz.

Missing data on request.

The two bullets in the product code indicate choice of mounting arrangement, voltage and frequency (see ordering information page).

General purpose cast iron motors

Technical data for totally enclosed squirrel cage three phase motors

IP 55 – IC 411 – Insulation class F, temperature rise class B

Output kW		Motor type		Speed r/min	Efficiency %	Power factor cos	Current I_N A	Speed r/min	Efficiency %	Power factor cos	Current I_N A	Moment of inertia J=1/4 GD² kgm²	Weight kg	Sound pressure level L_P dB(A)
1500 r/min = 4-poles				**380 V 50 Hz**				**415 V 50 Hz**				**Basic design**		
0.25		**M2QA**	**71 M4A**	1385	66.0	0.74	0.78	1405	64.0	0.69	0.79	0.00053	11	43
0.37		**M2QA**	**71 M4B**	1385	69.0	0.78	1.05	1405	68.0	0.71	1.07	0.00066	11	45
0.55		**M2QA**	**80 M4A**	1400	73.5	0.75	1.52	1420	72.5	0.68	1.55	0.00145	16	46
0.75		**M2QA**	**80 M4B**	1405	74.5	0.78	1.97	1425	74.0	0.72	1.96	0.00174	17	46
1.1		**M2QA**	**90 S4A**	1390	77.0	0.80	2.72	1410	77.5	0.75	2.65	0.00254	21	52
1.5		**M2QA**	**90 L4A**	1380	78.5	0.80	3.64	1400	78.5	0.77	3.48	0.00317	25	52
2.2		**M2QA**	**100 L4A**	1420	81.5	0.82	4.98	1440	81.4	0.78	4.85	0.00679	32	53
3		**M2QA**	**100 L4B**	1410	82.5	0.85	6.5	1430	82.7	0.82	6.17	0.00862	36	53
4		**M2QA**	**112 M4A**	1420	84.5	0.84	8.57	1440	85.0	0.8	8.24	0.01306	45	56
5.5		**M2QA**	**132 S4A**	1420	85.5	0.87	11.3	1440	86.5	0.83	10.7	0.02673	60	59
7.5		**M2QA**	**132 M4A**	1430	88.0	0.85	15.2	1450	88.0	0.84	14.1	0.03432	73	59
11		**M2QA**	**160 M4A**	1455	89.5	0.87	21.46	1463	89.5	0.83	20.6	0.06543	116	66
15		**M2QA**	**160 L4A**	1452	90.0	0.88	28.78	1461	90.0	0.85	27.28	0.09349	137	66
18.5		**M2QA**	**180 M4A**	1465	91.0	0.88	35.1	1470	91.0	0.82	34.49	0.16049	170	66
22		**M2QA**	**180 L4A**	1465	91.5	0.90	40.59	1475	91.5	0.86	38.9	0.18046	186	66
30		**M2QA**	**200 L4A**	1465	92.3	0.89	55	1470	86.8	0.87	55	0.2819	254	71
37		**M2QA**	**225 S4A**	1475	92.3	0.85	71	1480	92.0	0.82	68	0.37	308	73
45		**M2QA**	**225 M4A**	1475	92.6	0.88	83	1480	92.8	0.85	79	0.42	335	73
55		**M2QA**	**250 M4A**	1477	93.2	0.88	102	1482	93.6	0.86	95	0.78	450	76
75	2)	**M2BAT**	**280 SMA**	1480	94.0	0.85	143	1484	94.2	0.82	137	1.05	560	71
90	2)	**M2BAT**	**280 SMB**	1478	94.2	0.86	169	1483	94.7	0.85	157	1.32	600	71
110	2)	**M2BAT**	**315 SMA**	1484	94.5	0.85	209	1487	94.6	0.82	198	1.9	800	78
132	2)	**M2BAT**	**315 SMB**	1483	94.8	0.86	248	1486	95.0	0.84	232	2.2	855	78
160	2)	**M2BAT**	**315 SMC**	1483	95.0	0.86	300	1487	95.4	0.84	279	2.6	930	78
200	2)	**M2BAT**	**315 MLA**	1482	95.2	0.86	375	1486	95.7	0.85	343	3.2	1030	78
250		**M2BAT**	**355 S**	1487	95.6	0.86	465	1489	95.6	0.84	438	5.4	1500	82
1500 r/min = 4-poles				**380 V 50 Hz**				**415 V 50 Hz**				**High-output design**		
5.5	1)	**M2QA**	**112 L4A**									0.01484	49	64
9.2	1)	**M2QA**	**132 M4B**									0.0347	75	71
11	1)	**M2QA**	**132 M4C**									0.04227	80	73
18.5	1)	**M2QA**	**160 L4B**									0.10686	147	66
30	1)	**M2QA**	**180 L4B**									0.20783	200	70
37	1)	**M2QA**	**200 L4B**									0.29715	277	72
55	1)	**M2QA**	**225 M4B**									0.6244	351	75
75	1)	**M2QA**	**250 M4B**									0.9125	485	77
110	2)	**M2BAT**	**280 SMC**	1481	94.8	0.86	204	1485	95.2	0.84	191	1.7	660	71

1) Temperature rise class F by voltage 400 V 50 Hz.

2) Temperature rise class F by voltage 380 V 50 Hz.

Missing data on request.

General purpose cast iron motors

Technical data for totally enclosed squirrel cage three phase motors

IP 55 – IC 411 – Insulation class F, temperature rise class B

Output kW		Motor type		Product code		Speed r/min	Efficiency Full load 100%	Efficiency 3/4 load 75%	Power factor cos 100%	Current I_N A	Current $\frac{I_s}{I_N}$	Torque T_N Nm	Torque $\frac{T_s}{T_N}$	Torque $\frac{T_{max}}{T_N}$
1000 r/min = 6-poles						**400 V 50 Hz**				**Basic design**				
0.18		**M2QA**	**71 M6A**	3GQA	073 301-••A	910	55.0	50.1	0.65	0.73	4.0	1.89	1.8	2.4
0.25		**M2QA**	**71 M6B**	3GQA	073 302-••A	890	60.0	58.3	0.65	0.93	4.0	2.68	1.8	2.5
0.37		**M2QA**	**80 M6A**	3GQA	083 301-••A	930	63.0	63.2	0.66	1.29	5.0	3.8	1.9	2.0
0.55		**M2QA**	**80 M6B**	3GQA	083 302-••A	925	65.0	65.1	0.68	1.8	5.0	5.68	1.9	1.8
0.75		**M2QA**	**90 S6A**	3GQA	093 101-••A	920	71.0	70.2	0.72	2.12	5.0	7.79	2.0	2.3
1.1		**M2QA**	**90 L6A**	3GQA	093 501-••A	920	73.0	73.1	0.74	2.94	5.0	11.42	2.0	2.6
1.5		**M2QA**	**100 L6A**	3GQA	103 501-••A	940	76.0	75.3	0.77	3.78	5.5	15.24	2.0	2.4
2.2		**M2QA**	**112 M6A**	3GQA	113 301-••A	940	80.0	81.2	0.76	5.23	5.5	22.35	2.0	2.3
3		**M2QA**	**132 S6A**	3GQA	133 101-••A	960	82.5	83.5	0.78	6.73	6.5	29.84	2.0	2.4
4		**M2QA**	**132 M6A**	3GQA	133 301-••A	960	84.0	84.2	0.77	8.93	6.5	39.79	2.0	2.9
5.5		**M2QA**	**132 M6B**	3GQA	133 302-••A	960	86.0	85.6	0.79	11.7	6.5	54	2.0	3.0
7.5		**M2QA**	**160 M6A**	3GQA	163 301-••A	970	88.0	88.3	0.78	15.77	6.0	73	2.0	2.3
11		**M2QA**	**160 L6A**	3GQA	163 501-••A	970	88.5	88.6	0.78	23	6.0	108	2.2	2.4
15		**M2QA**	**180 L6A**	3GQA	183 501-••A	980	89.0	89.1	0.82	29.67	6.0	146	2.3	2.9
18.5		**M2QA**	**200 L6A**	3GQA	203 501-••A	980	90.3	90.2	0.82	36.06	6.0	180	2.2	2.5
22		**M2QA**	**200 L6B**	3GQA	203 502-••A	980	90.4	90.3	0.83	42.32	6.0	214	2.1	3.2
30		**M2QA**	**225 M6A**	3GQA	223 301-••A	980	90.8	89.2	0.78	61	6.6	292	2.2	2.9
37		**M2QA**	**250 M6A**	3GQA	253 301-••A	980	92.2	92.4	0.88	66	6.8	360	2.3	2.6
45		**M2BAT**	**280 SMA**	3GBA	283 210-••D	990	93.5	93.3	0.82	85	6.7	434	2.4	2.4
55		**M2BAT**	**280 SMB**	3GBA	283 220-••D	989	93.8	93.7	0.83	103	6.4	531	2.4	2.4
75	2)	**M2BAT**	**315 SMA**	3GBA	313 210-••D	992	94.2	94.0	0.8	145	6.3	722	1.9	2.3
90	2)	**M2BAT**	**315 SMB**	3GBA	313 220-••D	991	94.8	94.7	0.83	166	6.5	867	1.9	2.3
110	2)	**M2BAT**	**315 SMC**	3GBA	313 230-••D	991	95.1	95.0	0.82	206	6.7	1060	2.1	2.6
132	2)	**M2BAT**	**315 MLA**	3GBA	313 410-••D	991	95.3	95.2	0.83	242	6.5	1272	2.2	2.5
160		**M2BAT**	**355 S**	3GBA	353 100-••D	992	95.3	95.2	0.83	293	6.2	1540	1.8	2.3
1000 r/min = 6-poles						**400 V 50 Hz**				**High-output design**				
3	1)	**M2QA**	**112 M6B**	3GQA	113 302-••A	950	77.0		0.76	740	6.5	30.2	1.9	2.1
6.5	1)	**M2QA**	**132 M6C**	3GQA	133 303-••A	970	83.0		0.78	14.49	6.5	64	1.9	2.1
14	1)	**M2QA**	**160 L6B**	3GQA	163 502-••A	970	85.5		0.78	30.3	6.0	138	2.1	2.2
18.5	1)	**M2QA**	**180 L6B**	3GQA	183 502-••A	980	86.0		0.82	37.87	6.0	180	2.2	2.7
30	1)	**M2QA**	**200 L6C**	3GQA	203 503-••A	980	87.4		0.78	63	6.0	292	2.0	2.6
37	1)	**M2QA**	**225 M6B**	3GQA	223 302-••A	980	87.8		0.78	78	6.6	361	2.1	2.6
45	1)	**M2QA**	**250 M6B**	3GQA	253 302-••A	980	89.2		0.88	82	6.8	439	2.2	2.6
75		**M2BAT**	**280 SMC**	3GBA	283 230-••D	989	94.5	94.5	0.83	139	6.9	724	2.6	2.5

[1] Temperature rise class F by voltage 400 V 50 Hz.

[2] Temperature rise class F by voltage 380 V 50 Hz.

Missing data on request.

The two bullets in the product code indicate choice of mounting arrangement, voltage and frequency (see ordering information page).

General purpose cast iron motors

Technical data for totally enclosed squirrel cage three phase motors

IP 55 – IC 411 – Insulation class F, temperature rise class B

Output kW		Motor type		Speed r/min	Effi-ciency %	Power factor cos	Current I_N A	Speed r/min	Effi-ciency %	Power factor cos	Current I_N A	Moment of inertia J=1/4 GD² kgm²	Weight kg	Sound pressure level L_P dB(A)
1000 r/min = 6-poles				**380 V 50 Hz**				**415 V 50 Hz**				**Basic design**		
0.18		**M2QA**	**71 M6A**	905	55.5	0.69	0.72	915	52.5	0.62	0.77	0.00056	10	42
0.25		**M2QA**	**71 M6B**	885	60.0	0.65	0.98	895	59.0	0.62	0.95	0.00074	11	42
0.37		**M2QA**	**80 M6A**	925	63.5	0.7	1.29	935	62.0	0.62	1.33	0.00159	17	45
0.55		**M2QA**	**80 M6B**	920	65.0	0.71	1.82	930	65.5	0.66	1.79	0.00196	18	45
0.75		**M2QA**	**90 S6A**	915	71.0	0.75	2.13	925	70.5	0.69	2.15	0.00292	21	48
1.1		**M2QA**	**90 L6A**	915	73.0	0.77	2.98	925	73.0	0.7	2.98	0.00379	25	48
1.5		**M2QA**	**100 L6A**	935	76.0	0.79	3.8	945	75.5	0.75	3.73	0.00999	32	51
2.2		**M2QA**	**112 M6A**	935	79.0	0.77	5.5	945	80.0	0.75	5.14	0.03116	40	54
3		**M2QA**	**132 S6A**	955	82.0	0.81	6.87	965	82.5	0.76	6.66	0.03116	55	56
4		**M2QA**	**132 M6A**	955	84.0	0.77	9.39	965	84.0	0.75	8.84	0.04074	65	56
5.5		**M2QA**	**132 M6B**	945	85.5	0.8	12.3	955	86.0	0.78	11.4	0.05332	75	56
7.5		**M2QA**	**160 M6A**	968	88.0	0.79	16.39	975	88.0	0.75	15.81	0.09231	119	61
11		**M2QA**	**160 L6A**	966	88.5	0.8	23.61	975	88.5	0.75	23.06	0.1297	140	62
15		**M2QA**	**180 L6A**	980	89.0	0.84	30.48	985	89.0	0.79	29.68	0.2418	180	63
18.5		**M2QA**	**200 L6A**	975	90.6	0.84	36.94	980	90.1	0.79	36.16	0.34174	231	64
22		**M2QA**	**200 L6B**	975	90.9	0.84	43.79	980	90.1	0.81	41.93	0.46837	254	64
30		**M2QA**	**225 M6A**	980	90.5	0.78	64	980	90.9	0.76	60	0.62691	308	66
37		**M2QA**	**250 M6A**	978	92.0	0.9	68	982	92.3	0.86	64	0.97	382	68
45		**M2BAT**	**280 SMA**	988	93.9	0.83	89	990	93.5	0.8	84	1.6	540	71
55		**M2BAT**	**280 SMB**	987	93.5	0.84	108	990	93.8	0.82	101	1.9	580	71
75	2)	**M2BAT**	**315 SMA**	990	94.1	0.82	148	992	94.2	0.77	143	2.8	780	75
90	2)	**M2BAT**	**315 SMB**	990	95.7	0.84	174	992	94.8	0.81	163	3.6	870	75
110	2)	**M2BAT**	**315 SMC**	990	94.9	0.83	215	991	95.0	0.8	203	4.4	930	75
132	2)	**M2BAT**	**315 MLA**	989	95.1	0.83	255	991	95.3	0.82	237	5.3	1040	75
160		**M2BAT**	**355 S**	991	95.2	0.83	307	993	95.3	0.82	287	7.3	1500	77
1000 r/min = 6-poles				**380 V 50 Hz**				**415 V 50 Hz**				**High-output design**		
3	1)	**M2QA**	**112 M6B**									0.0199	45	56
6.5	1)	**M2QA**	**132 M6C**									0.0611	75	59
14	1)	**M2QA**	**160 L6B**									0.139	155	64
18.5	1)	**M2QA**	**180 L6B**									0.283984	196	65
30	1)	**M2QA**	**200 L6C**									0.495	291	66
37	1)	**M2QA**	**225 M6B**									0.803267	351	68
45	1)	**M2QA**	**250 M6B**									1.32	455	71
75		**M2BAT**	**280 SMC**	987	94.3	0.84	144	990	94.6	0.82	135	2.6	660	71

1) Temperature rise class F by voltage 400 V 50 Hz.

2) Temperature rise class F by voltage 380 V 50 Hz.

Missing data on request.

General purpose cast iron motors

Technical data for totally enclosed squirrel cage three phase motors

IP 55 – IC 411 – Insulation class F, temperature rise class B

Output kW	Motor type		Product code		Speed r/min	Efficiency Full load 100%	Efficiency 3/4 load 75%	Power factor cos 100%	Current I_N A	Current I_s / I_N	Torque T_N Nm	Torque T_s / T_N	Torque T_{max} / T_N
750 r/min = 8-poles					**400 V 50 Hz**				**Basic design**				
0.18	**M2QA**	**80 M8A**	3GQA	084 301-••A	700	51.0	50.1	0.6	0.85	3.3	2.46	1.8	1.9
0.25	**M2QA**	**80 M8B**	3GQA	084 302-••A	700	54.5	53.3	0.6	1.11	3.6	3.41	1.8	1.9
0.37	**M2QA**	**90 S8A**	3GQA	094 101-••A	700	62.5	62.1	0.6	1.42	4.4	5.05	1.8	1.9
0.55	**M2QA**	**90 L8A**	3GQA	094 501-••A	700	63.5	63.3	0.6	2.07	4.7	7.5	1.8	2.0
0.75	**M2QA**	**100 L8A**	3GQA	104 501-••A	700	70.0	70.1	0.64	2.42	5.0	10.23	1.8	2.2
1.1	**M2QA**	**100 L8B**	3GQA	104 502-••A	700	71.5	70.3	0.65	3.45	5.0	15.01	1.8	2.4
1.5	**M2QA**	**112 M8A**	3GQA	114 301-••A	700	75.0	75.4	0.68	4.27	5.0	20.46	1.8	2.4
2.2	**M2QA**	**132 S8A**	3GQA	134 101-••A	710	81.0	81.8	0.7	5.6	5.5	29.59	1.8	2.5
3	**M2QA**	**132 M8A**	3GQA	134 301-••A	710	81.0	81.4	0.75	7.13	5.5	40.35	1.8	2.2
4	**M2QA**	**160 M8A**	3GQA	164 301-••A	720	84.0	84.0	0.73	9.42	5.5	53	2.1	2.6
5.5	**M2QA**	**160 M8B**	3GQA	164 302-••A	720	85.5	85.6	0.74	12.55	5.5	72	2.1	2.8
7.5	**M2QA**	**160 L8A**	3GQA	164 501-••A	720	86.5	85.8	0.74	16.91	5.5	99	2.1	2.5
11	**M2QA**	**180 L8A**	3GQA	184 501-••A	730	87.7	87.0	0.77	23.51	5.4	143	2.0	2.8
15	**M2QA**	**200 L8A**	3GQA	204 501-••A	730	89.0	89.4	0.76	32.009	5.5	196	2.3	2.8
18.5	**M2QA**	**225 S8A**	3GQA	224 101-••A	740	90.0	89.1	0.75	39.56	5.5	238	2.1	2.7
22	**M2QA**	**225 M8A**	3GQA	224 301-••A	740	90.5	88.2	0.75	46.78	6.0	283	2.2	2.7
30	**M2QA**	**250 M8A**	3GQA	254 301-••A	740	91.3	90.1	0.79	60	6.5	387	2.3	2.4
37	**M2BAT**	**280 SMA**	3GBA	284 210-••D	741	93.5	93.3	0.78	74	7.3	477	1.8	3.0
45	**M2BAT**	**280 SMB**	3GBA	284 220-••D	741	94.0	93.8	0.78	90	7.6	580	1.9	3.2
55	**M2BAT**	**315 SMA**	3GBA	314 210-••D	742	94.1	94.0	0.81	104	7.1	708	1.6	2.7
75	**M2BAT**	**315 SMB**	3GBA	314 220-••D	741	94.4	94.3	0.82	141	7.1	968	1.7	2.7
90	**M2BAT**	**315 SMC**	3GBA	314 230-••D	741	94.8	94.7	0.82	167	7.4	1161	1.8	2.7
110	**M2BAT**	**315 MLA**	3GBA	314 410-••D	740	95.0	95.0	0.83	203	7.3	1420	1.8	2.7
132	**M2BAT**	**355 S**	3GBA	354 100-••D	743	95.0	94.9	0.81	247	6.5	1697	1.3	2.3
750 r/min = 8-poles					**400 V 50 Hz**				**High-output design**				
2 [1]	**M2QA**	**112 M8B**	3GQA	114 302-••A	700	72.0		0.68	5.94	5.2	27.3	1.7	1.9
3.8 [1]	**M2QA**	**132 M8B**	3GQA	134 302-••A	710	78.0		0.75	9.38	5.5	51	1.7	1.9
8.5 [1]	**M2QA**	**160 L8B**	3GQA	164 502-••A	720	83.5		0.74	19.86	5.5	113	2.0	2.4
15 [1]	**M2QA**	**180 L8B**	3GQA	184 502-••A	730	84.7		0.77	33.2	5.4	196	1.9	2.6
18.5 [1]	**M2QA**	**200 L8B**	3GQA	204 502-••A	730	86.0		0.76	40.85	5.4	242	1.9	2.6
30 [1]	**M2QA**	**225 M8B**	3GQA	224 302-••A	740	87.5		0.75	66	6.3	387	2.1	2.6
37 [1]	**M2QA**	**250 M8B**	3GQA	254 302-••A	740	88.3		0.79	76	6.5	478	2.2	2.5
55	**M2BAT**	**280 SMC**	3GBA	284 230-••D	741	94.4	94.3	0.79	108	7.8	709	1.9	3.2

[1] Temperature rise class F by voltage 400 V 50 Hz.

[2] Temperature rise class F by voltage 380 V 50 Hz.

Missing data on request.

The two bullets in the product code indicate choice of mounting arrangement, voltage and frequency (see ordering information page).

General purpose cast iron motors

Technical data for totally enclosed squirrel cage three phase motors

IP 55 – IC 411 – Insulation class F, temperature rise class B

Output kW	Motor type		Speed r/min	Effi-ciency %	Power factor cos	Current I_N A	Speed r/min	Effi-ciency %	Power factor cos	Current I_N A	Moment of inertia J=1/4 GD² kgm²	Weight kg	Sound pressure level L_P dB(A)
750 r/min = 8-poles			**380 V 50 Hz**				**415 V 50 Hz**				**Basic design**		
0.18	**M2QA**	**80 M8A**	695	51.0	0.61	0.88	705	51.5	0.6	0.82	0.00111	16	42
0.25	**M2QA**	**80 M8B**	695	54.0	0.61	1.16	705	54.5	0.6	1.08	0.00326	17	42
0.37	**M2QA**	**90 S8A**	695	62.0	0.61	1.49	705	62.5	0.6	1.38	0.00541	21	46
0.55	**M2QA**	**90 L8A**	695	63.0	0.61	2.18	705	63.5	0.6	2.01	0.00756	24	46
0.75	**M2QA**	**100 L8A**	695	70.0	0.67	2.43	705	69.0	0.64	2.39	0.00971	31	53
1.1	**M2QA**	**100 L8B**	695	71.5	0.68	3.45	705	70.5	0.62	3.47	0.01186	34	53
1.5	**M2QA**	**112 M8A**	695	75.0	0.68	4.47	705	75.0	0.67	4.16	0.01559	42	55
2.2	**M2QA**	**132 S8A**	705	80.5	0.75	5.6	715	80.5	0.69	5.55	0.03625	56	55
3	**M2QA**	**132 M8A**	705	81.0	0.78	7.22	715	81.0	0.72	7.11	0.04141	64	56
4	**M2QA**	**160 M8A**	715	84.0	0.76	9.52	720	84.0	0.7	9.46	0.0676	105	58
5.5	**M2QA**	**160 M8B**	715	85.5	0.76	12.86	720	85.5	0.7	12.78	0.09524	125	58
7.5	**M2QA**	**160 L8A**	715	86.5	0.77	17.11	722	86.5	0.7	17.23	0.12122	142	58
11	**M2QA**	**180 L8A**	725	87.7	0.79	24.12	730	87.7	0.74	23.58	0.23645	176	61
15	**M2QA**	**200 L8A**	725	88.9	0.78	32.86	730	88.8	0.74	31.75	0.37103	235	63
18.5	**M2QA**	**225 S8A**	740	89.9	0.75	41.69	745	90.3	0.71	40.14	0.53287	290	65
22	**M2QA**	**225 M8A**	740	90.4	0.76	48.65	745	90.3	0.71	47.74	0.65825	302	65
30	**M2QA**	**250 M8A**	738	91.1	0.8	63	741	91.4	0.78	58	0.975	392	67
37	**M2BAT**	**280 SMA**	740	93.2	0.8	75	742	93.4	0.76	73	1.85	570	65
45	**M2BAT**	**280 SMB**	740	93.8	0.8	92	742	94.0	0.75	90	2.2	610	65
55	**M2BAT**	**315 SMA**	741	93.9	0.83	108	743	94.1	0.79	103	3.2	820	65
75	**M2BAT**	**315 SMB**	740	94.2	0.83	147	742	94.4	0.81	137	4.1	910	65
90	**M2BAT**	**315 SMC**	740	94.6	0.84	173	742	94.8	0.81	164	4.9	980	65
110	**M2BAT**	**315 MLA**	739	94.9	0.84	210	741	95.0	0.81	198	5.8	1100	72
132	**M2BAT**	**355 S**	742	94.9	0.82	258	743	95.0	0.8	244	7.3	1500	75
750 r/min = 8-poles			**380 V 50 Hz**				**415 V 50 Hz**				**High-output design**		
2 [1]	**M2QA**	**112 M8B**									0.0199	45	58
3.8 [1]	**M2QA**	**132 M8B**									0.04776	75	59
8.5 [1]	**M2QA**	**160 L8B**									0.1312	136	61
15 [1]	**M2QA**	**180 L8B**									0.283984	196	63
18.5 [1]	**M2QA**	**200 L8B**									0.46854	274	65
30 [1]	**M2QA**	**225 M8B**									0.803267	349	67
37 [1]	**M2QA**	**250 M8B**									1.28	436	69
55	**M2BAT**	**280 SMC**	740	94.2	0.81	110	742	94.4	0.77	106	2.85	690	65

[1] Temperature rise class F by voltage 400 V 50 Hz.

[2] Temperature rise class F by voltage 380 V 50 Hz.

Missing data on request.

4

General purpose cast iron motors - Variant codes

Code [1]	Variant	Motor size 71-80	90-100	112-132	160-180	200-250	280-355
	Balancing						
052	Vibration acc. to Grade A (IEC 60034-14).	M	M	M	NA	NA	NA
424	Vibration acc. to Grade B (IEC 60034-14).	M	M	M	R	R	NA
417	Full key balancing.	M	M	M	R	R	NA
	Bearings and lubrication						
036	Transport lock for bearings.	NA	NA	NA	M	M	M
037	Roller bearing at D-end.	NA	NA	NA	M	M	M
039	Cold resistant grease.	M	M	M	M	M	M
040	Heat resistant grease.	M	M	M	M	M	M
041	Bearings regreasable via grease nipples. Frame size 250 as standard.	NA	NA	NA	M	M	S
043	SPM-nipples. Frame size 355 as standard.	NA	NA	M	NA	NA	M
	Branch standard designs						
178	Stainless steel/acid proof bolts.	M	M	M	M	M	M
209	Non-standard voltage or frequency, (special winding).	M	M	M	M	M	NA
425	Corrosion protected stator and rotor core.	M	M	M	M	M	S
785	Reinforced tropicalisation.	S	S	S	S	S	S
	Cooling system						
068	Metal fan.	M	M	M	M	M	M
183	Separate motor cooling fan (fan axial, N-end).	P	M	M	P	P	NA
	Dimension drawing						
141	Binding dimension drawing.	M	M	M	M	M	M
	Drain holes						
065	Plugged existing drain holes.	NA	NA	NA	NA	NA	M
066	Modified drain hole position (for specified IM xxxx).	NA	NA	NA	NA	NA	M
076	Draining holes with plugs.	M	M	M	M	M	S
	Earthing bolt						
067	External earthing bolt.	M	M	M	M	M	M
	Heating elements						
	Motor size / **Element capacity** 71-160 / 25 W 180-280 / 50 W 315 / 1 x 65 W 355 / 2 x 65 W						
450	Heating element, 100-120 V.	M	M	M	M	M	M
451	Heating element, 200-240 V.	M	M	M	M	M	M
	Insulation system						
014	Winding insulation class H.	P	P	P	P	P	NA
405	Special winding insulation for frequency converter supply.	P	P	P	P	P	NA

*) Certain variant codes cannot be used simultaneously.

S = Included as standard
M = On modification of a stocked motor, or on new manufacture,the number per order may be limited.
P = New manufacture only.
R = On request.
NA = Not applicable

Code [1)]	Variant	Motor size 71-80	90-100	112-132	160-180	200-250	280-355
	Mounting arrangements						
008	IM2101 foot/flange mounted, IEC flange, from IM1001(B34 from B3). Not possible for frame size 132.	M	M	M	NA	NA	NA
009	IM2001 foot/flange mounted, IEC flange, from IM1001(B35 from B3).	M	M	M	M	M	M
047	IM 3601 flange mounted, IEC flange, from IM3001 (B14 from B5). Not possible for frame size 132.	M	M	M	NA	NA	NA
078	(IM 3601) flange mounted, DIN C-flange. Larger flange than standard version. Not possible for frame size 132.	M	M	M	NA	NA	NA
090	(IM 2101) foot/flange mounted, DIN C-flange, from IM 1001 (B34 from B3). Not possible for frame size 132.	M	M	M	NA	NA	NA
	Painting						
114	Special paint colour, standard grade.	M	M	M	M	M	M
	Protection						
005	Protective roof, vertical motor, shaft down.	M	M	M	M	M	M
072	Radial seal at D-end.	M	M	M	M	M	M
073	Sealed against oil at D-end.	P	P	P	P	P	M
158	Degree of protection IP65.	M	M	M	M	M	NA
211	Weather protected, IP xx W.	M	M	M	M	M	NA
401	Protective roof, horizontal motor.	M	M	M	M	M	M
403	Degree of protection IP56.	M	M	M	M	M	NA
	Rating & instruction plates						
002	Restamping voltage, frequency and output, continuous duty.	M	M	M	M	M	M
095	Restamping output (maintained voltage, frequency) intermittent duty.	M	M	M	M	M	M
135	Mounting of additional identification plate, stainless.	M	M	M	M	M	M
138	Mounting of additional identification plate, aluminum.	M	M	M	M	M	M
139	Additional identification plate delivered loose.	M	M	M	M	M	M
161	Additional rating plate delivered loose.	M	M	M	M	M	M
	Stator winding temperature sensors						
121	Bimetal detectors, break type (NCC), (3 in series), 130°C, in stator winding.	M	M	M	M	M	M
122	Bimetal detectors, break type (NCC), (3 in series), 150°C, in stator winding.	M	M	M	M	M	M
123	Bimetal detectors, break type (NCC), (3 in series), 170°C, in stator winding.	M	M	M	M	M	M
125	Bimetal detectors, break type (NCC), (2x3 in series), 150°C, in stator winding.	M	M	M	M	M	M
127	Bimetal detectors, break type (NCC), (3 in series, 130°C, & 3 in series, 150°C), in stator winding.	M	M	M	M	M	M
321	Bimetal detectors, closing type (NO), (3 in parallel), 130°C, in stator winding.	M	M	M	M	M	M
322	Bimetal detectors, closing type (NO), (3 in parallel), 150°C, in stator winding.	M	M	M	M	M	M
323	Bimetal detectors, closing type (NO), (3 in parallel), 170°C, in stator winding.	M	M	M	M	M	M
325	Bimetal detectors, closing type (NO), (2x3 in parallel), 150°C, in stator winding.	M	M	M	M	M	M
327	Bimetal detectors, closing type (NO), (3 in parallel, 130°C, & 3 in parallel 150°C), in stator winding.	M	M	M	M	M	M

*) Certain variant codes cannot be used simultaneously.

S = Included as standard
M = On modification of a stocked motor, or on new manufacture,the number per order may be limited.
P = New manufacture only.
R = On request.
NA = Not applicable

4

Code [1]	Variant	Motor size 71-80	90-100	112-132	160-180	200-250	280-355
435	PTC-thermistors (3 in series), 130°C, in stator winding.	M	M	M	M	M	M
436	PTC-thermistors (3 in series), 150°C, in stator winding.	M	M	M	S	S	S
437	PTC-thermistors (3 in series), 170°C, in stator winding.	M	M	M	M	M	M
439	PTC-thermistors (2x3 in series), 150°C, in stator winding.	M	M	M	M	M	M
441	PTC-thermistors (3 in series 150°C & 3 in series 150°C, in stator winding.	M	M	M	M	M	M
442	PTC-thermistors (3 in series 150°C & 3 in series 150°C, in stator winding.	M	M	M	M	M	M
445	Pt100 (1per phase) in stator winding. Not available for frame size 71.	M	M	M	M	M	M
	Terminal box						
015	Motor supplied in D-connection.	M	M	M	M	M	M
017	Motor supplied in Y-connection.	M	M	M	M	M	M
021	Terminal box LHS, seen from D-end (= L in product code).	P	P	P	P	P	NA
137	Extended cable connection, low terminal box.	P	P	P	P	P	NA
157	Terminal box degree of protection IP 65.	M	M	M	M	M	M
180	Terminal box RHS, seen from D-end (= R in product code).	M	M	M	M	M	NA
230	One standard cable gland or cable box.	M	M	M	M	M	S
231	Standard cable glands with clamping device.	S	S	S	M	M	NA
400	4x90 degrees turnable terminal box.	P	P	P	P	P	NA
418	Separate terminal box for temperature detectors.	M	M	M	P	P	M
467	Lower than standard terminal box and rubber extended cable, length 2 m included.	M	M	M	M	M	M
468	Cable entry from D-end.	M	M	M	M	M	M
469	Cable entry from N-end.	M	M	M	NA	NA	NA
731	Two standard cable glands.	NA	NA	NA	NA	NA	M
	Testing						
145	Type test report from catalogue motor, 400 V 50 Hz.	M	M	M	M	M	M
146	Type test with report for motor from specific delivery batch.	R	R	R	R	R	M
148	Routine test report.	M	M	M	M	M	M
760	Vibration level test.	M	M	M	M	M	M
762	Noise level test.	NA	NA	NA	NA	NA	M
	Variable speed drives						
701	Insulated bearing at N-end.	NA	NA	NA	NA	NA	M
704	EMC cable gland.	NA	NA	NA	NA	NA	M

*) Certain variant codes cannot be used simultaneously.

S = Included as standard
M = On modification of a stocked motor, or on new manufacture,the number per order may be limited.
P = New manufacture only.
R = On request.
NA = Not applicable

General purpose cast iron motors Sizes 71-132

Dimension drawings

Foot-mounted; IM B3 (IM 1001), IM B6 (IM 1011), IM B7 (IM 1061), IM B8 (IM 1071), IM V5 (IM 1011), IM V6 (IM 1031)

Three phase motor, foot-mounted, terminal box top-mounted

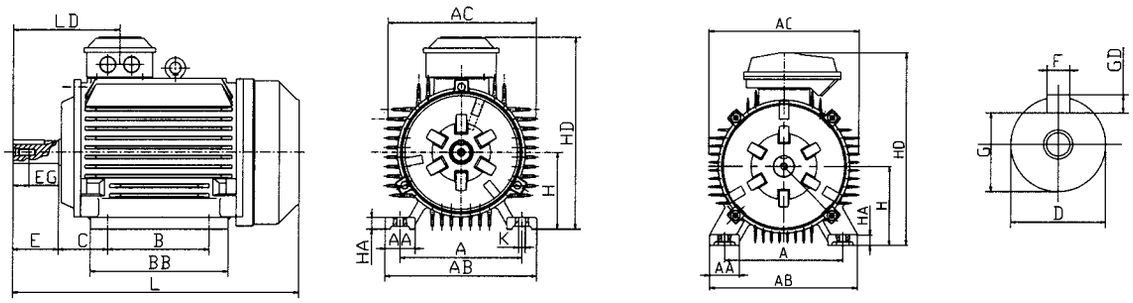

Three phase motor, foot-mounted, terminal box on right hand side

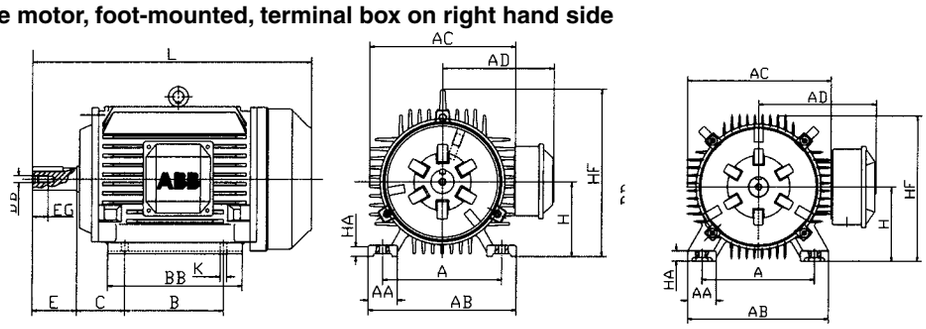

Motor size	Poles	A	AA	AB	AC	AD	B	BB	C	D	DB	E	EG
71M	2-6	112	30	145	145	120	90	110	45	14	M5	30	12.5
80M	2-6	125	35	160	165	145	100	135	50	19	M6	40	16
90S	2-6	140	35	175	180	150	100	140	56	24	M8	50	19
90L	2-6	140	35	175	180	150	125	165	56	24	M8	50	19
100L	2-6	160	40	200	205	175	140	180	63	28	M10	60	22
112M	2-8	190	50	235	225	185	140	190	70	28	M10	60	22
132S	2-8	216	55	270	265	205	140	205	89	38	M12	80	28
132M	2-8	216	55	270	265	205	178	240	89	38	M12	80	28

Motor size	Poles	F	G	GD	H	HA	HD	HF	K	L	LD
71 M	2-6	5	11	5	71	10	200	-	7	255	100
80 M	2-6	6	15.5	6	80	12	225	170	10	285	116
90 S	2-6	8	20	7	90	12	240	185	10	310	128
90 L	2-6	8	20	7	90	12	240	185	10	335	128
100 L	2-6	8	24	7	100	14	275	245	12	380	144
112 M	2-6	8	24	7	112	15	290	265	12	380	144
132 S	2-6	10	33	8	132	18	335	300	12	465	169
132 M	2-6	10	33	8	132	18	335	300	12	505	169

Tolerances:

A, B, C	+, - 0.8	H	+ 0, - 0.5
D,DA	ISO m6	N	ISO j6
F, FA	ISO h9		

Above table gives the main dimensions in mm.

For detailed drawings please see our web-pages 'www.abb.com/motors&drives' or contact us.

4

General purpose cast iron motors Sizes 71-132

Dimension drawings

Flange-mounted; IM B5 (IM 3001), IM V1 IM 3001), IM V3 (IM 3031)
IM B14 (IM 3601), IM V18 (IM 3611), IM V19 (IM 3631)

Three phase motor, flange- mounted

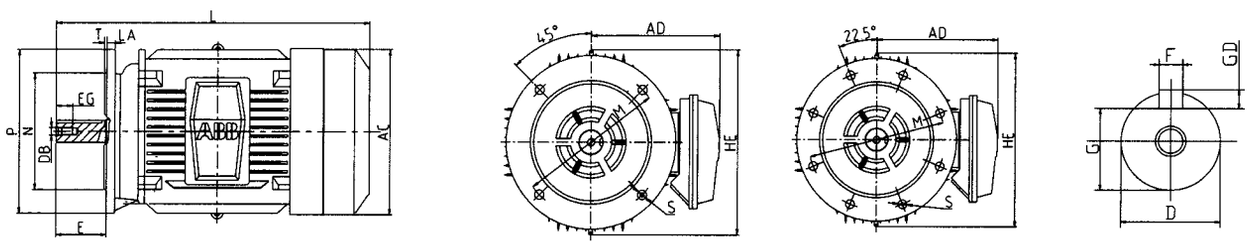

Three phase motor, flange-mounted, small flange (B14)

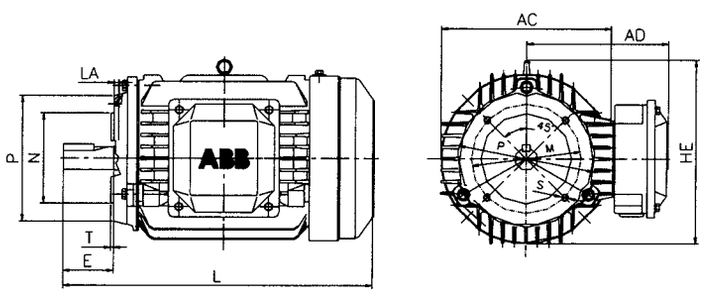

IM B5 (IM3001), IM V1 (IM3011), IM V3 (IM3031)

Type M2QA	Poles	AC	AD	D	DB	E	EG	F	G	GD	HE	L	LA	M	N	P	S	T
71M	2-6	145	120	14	M5	30	12.5	5	11	5	165	255	9	130	110	160	10	3.5
80M	2-8	165	145	19	M6	40	16	6	15.5	6	200	285	9	165	130	200	12	3.5
90S	2-8	180	150	24	M8	50	19	8	20	7	200	310	10	165	130	200	12	3.5
90L	2-8	180	150	24	M8	50	19	8	20	7	200	335	10	165	130	200	12	3.5
100L	2-8	205	175	28	M10	60	22	8	24	7	265	380	11	215	180	250	15	4
112M	2-8	225	185	28	M10	60	22	8	24	7	270	395	11	215	180	250	15	4
132S	2-8	265	205	38	M12	80	28	10	33	8	320	465	12	265	230	300	15	4
132M	2-8	265	205	38	M12	80	28	10	33	8	320	505	12	265	230	300	15	4

IM B14 (IM3611), IM V19 (IM3631)

Motor size	Poles	Flange size	HE	P	M	N	S	T
71M	2-6	C105	145	105	85	70	M6	2.5
	C140	145	140	115	95	M8	3	
80M	2-8	C120	165	120	100	80	M6	3
	C160	165	160	130	110	M8	3.5	
90S	2-8	C140	185	140	115	95	M8	3
	C160	185	160	130	110	M8	3.5	
90L	2-8	C140	185	140	115	95	M8	3
		C160	185	160	130	110	M8	3.5
100L	2-8	C160	255	160	130	110	M8	3.5
		C200	255	200	165	130	M10	3.5
112M	2-8	C160	265	160	130	110	M8	3.5
	C200	265	200	165	130	M10	3.5	

Tolerances:

D,DA	ISO m6
F, FA	ISO h9
N	ISO j6

Above table gives the main dimensions in mm.

For detailed drawings please see our web-pages 'www.abb.com/motors&drives' or contact us.

General purpose cast iron motors Sizes 71-132

Dimension drawings

Foot- and flange-mounted; M B35 (IM 2001), IM V15 (IM 2011), IM V 36 (IM 2031)

Three phase motor, foot- and flange-mounted, terminal box top-mounted

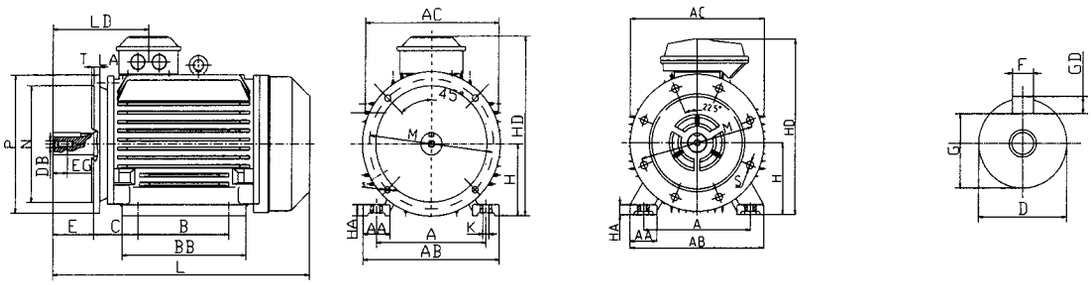

Three phase motor, foot- and flange-mounted, terminal box on right

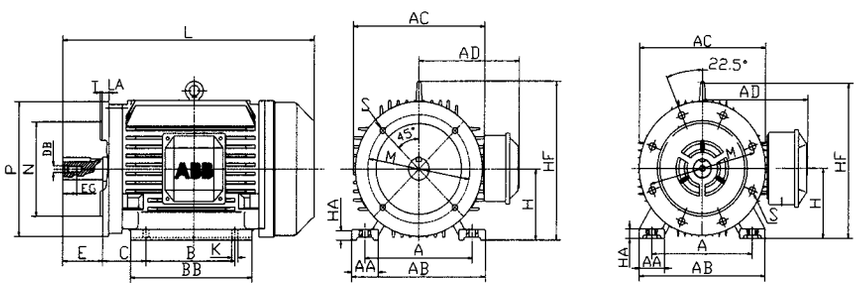

Motor size	Poles	A	AA	AB	AC	AD	B	BB	C	D	DB	E	EG	F
71M	2-6	112	30	145	145	120	90	110	45	14	M5	30	12.5	5
80M	2-8	125	35	160	165	145	100	135	50	19	M6	40	16	6
90S	2-8	140	35	175	180	150	100	140	56	24	M8	50	19	8
90L	2-8	140	35	175	180	150	125	165	56	24	M8	50	19	8
100L	2-8	160	40	200	205	175	140	180	63	28	M10	60	22	8
112M	2-8	190	50	235	225	185	140	190	70	28	M10	60	22	8
132S	2-8	216	55	270	265	205	140	205	89	38	M12	80	28	10
132M	2-8	216	55	270	265	205	178	240	89	38	M12	80	28	10

Motor size	Poles	G	GD	H	HA	HD	HF	K	L	LA	LD	M	N	P	S	T
71M	2-6	11	5	71	10	200	-	7	255	9	100	130	110	160	10	3.5
80M	2-8	15.5	6	80	12	225	170	10	285	9	116	165	130	200	12	3.5
90S	2-8	20	7	90	12	240	185	10	310	10	128	165	130	200	12	3.5
90L	2-8	20	7	90	12	240	185	10	335	10	128	165	130	200	12	3.5
100L	2-8	24	7	100	14	275	245	12	380	11	138	215	180	250	15	4
112M	2-8	24	7	112	15	290	265	12	395	11	144	215	180	250	15	4
132S	2-8	33	8	132	18	335	300	12	465	12	169	265	230	300	15	4
132M	4-8	33	8	132	18	335	300	12	505	12	169	265	230	300	15	4

Tolerances:

A, B, C	+- 0.8	H	+ 0, -0.5
D,DA	ISO m6	N	ISO j6
F, FA	ISO h9		

Above table gives the main dimensions in mm.

For detailed drawings please see our web-pages 'www.abb.com/motors&drives' or contact us.

4

General purpose cast iron motors Sizes 160-250

Dimension drawings

Foot-mounted; IM B3 (IM 1001), IM B6 (IM 1051), IM B7 (IM 1061), IM B8 (IM 1071), IM V5 (IM 1011), IM V6 (IM 1031)

Three phase motor, foot-mounted, terminal box top-mounted

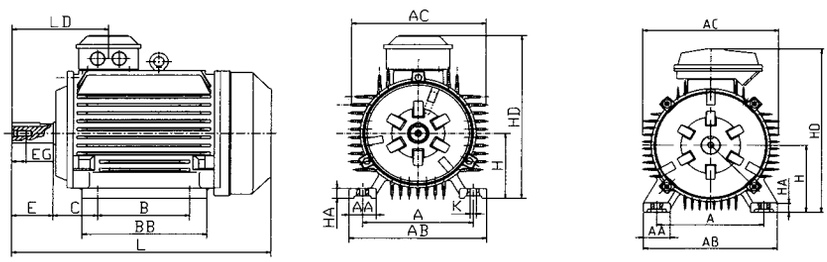

Three phase motor, foot-mounted, terminal box on right hand side

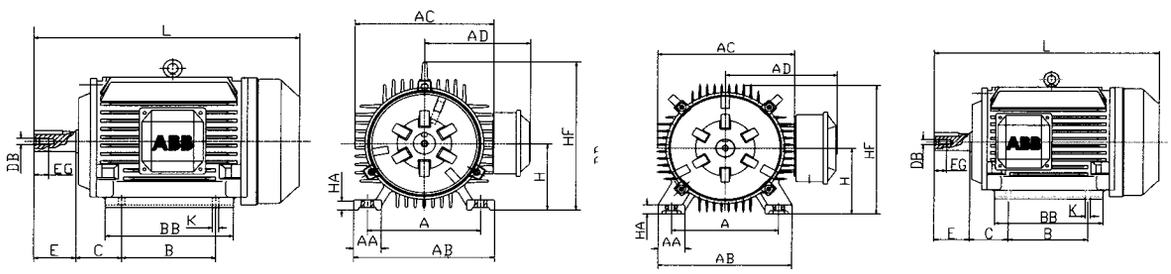

IEC-frame size 250

Motor size	Poles	A	AA	AB	AC	AD	B	BB	C	D	DB	E	EG
160 M	2-8	254	60	325	330	255	210	265	108	42	M16	110	36
160 L	2-8	254	60	325	330	255	254	310	108	42	M16	110	36
180 M	2-4	279	70	350	355	270	241	315	121	48	M16	110	36
180 L	4-8	279	70	350	350	270	279	350	121	48	M16	110	36
200 L	2-8	318	70	390	395	305	305	380	133	55	M20	110	39
225 S	4-8	356	75	435	440	335	286	380	149	60	M20	140	39
225 M	2	356	75	435	450	335	311	405	149	55	M20	110	39
225 M	4-8	356	75	435	450	335	311	405	149	60	M20	140	39
250 M	2	406	80	490	515	395	349	455	168	60	M20	140	39
250 M	4-8	406	80	490	515	395	439	455	168	65	M20	140	39

Motor size	Poles	F	G	GD	H	HA	HD	HF	K	L	LD
160 M	2-8	12	47	8	160	22	415	380	15	600	250
160 L	2-8	12	47	8	160	22	415	380	15	645	250
180 M	2-4	14	42.5	9	180	22	450	420	15	670	270
180 L	4-8	14	42.5	9	180	22	450	420	15	710	270
200 L	2-8	16	49	10	200	25	510	470	19	770	285
225 S	4-8	18	53	11	225	28	560	520	19	820	340
225 M	2	16	49	10	225	28	560	520	19	815	310
225 M	4-8	18	53	11	225	28	560	520	19	840	340
250 M	2	18	53	11	250	30	645	580	24	930	360
250 M	4-8	18	58	11	250	30	645	580	24	930	360

Tolerances:

A, B, C	+, - 0.8	F, FA	ISO h0
D,DA	ISO k6 < Ø 50 mm	H	+ 0, - 0.5
	ISO h9 > Ø 50 mm		

Above table gives the main dimensions in mm.

For detailed drawings please see our web-pages 'www.abb.com/motors&drives' or contact us.

General purpose cast iron motors Sizes 160-250

Dimension drawings

Flange-mounted; IM B5 (IM 3001), IM V1 (IM 3011), IM V3 (IM 3031), IM B14 (IM 3601), IM V18 (IM 3611), IM V19 (IM 3631)

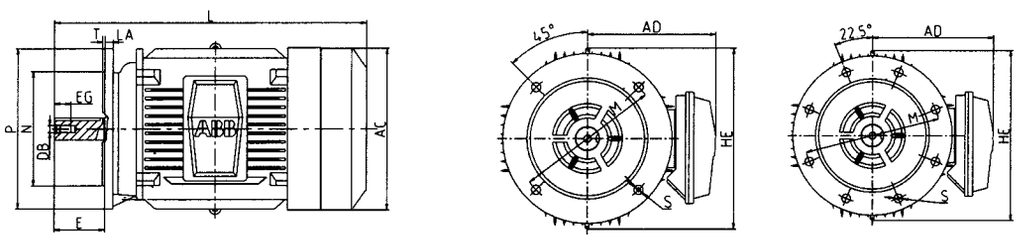

4

Motor size	Poles	AD	D	DB	E	EG	F	G	GD	HE	L	LA	M	N	P	S	T
160 M	2-8	255	42	M16	110	36	12	47	8	400	600	15	300	250	350	19	5
160 L	2-8	255	42	M16	110	36	12	47	8	400	645	15	300	250	350	19	5
180 M	2-4	270	48	M16	110	36	14	42.5	9	420	670	18	300	250	350	19	5
180 L	4-8	270	48	M16	110	36	14	42.5	9	420	710	18	300	250	350	19	5
200 L	2-8	305	55	M20	110	39	16	49	10	470	770	20	350	300	400	19	5
225 S	4-8	335	60	M20	140	39	18	53	11	520	820	20	400	350	450	19	5
225 M	2	335	55	M20	110	39	16	49	10	520	815	20	400	350	450	19	5
225 M	4-8	335	60	M20	140	39	18	53	11	520	840	20	400	350	450	19	5
250 M	2	395	60	M20	140	39	18	53	11	655	930	22	500	450	550	19	5
250 M	4-8	395	65	M20	140	39	18	53	11	655	930	22	500	450	550	19	5

Tolerances:

D,DA	ISO k6 < Ø 50 mm
	ISO m6 > Ø 50 mm
F, FA	ISO h9
N	ISO j6

Above table gives the main dimensions in mm.

For detailed drawings please see our web-pages 'www.abb.com/motors&drives' or contact us.

General purpose cast iron motors Sizes 160-250

Dimension drawings

Foot- and flange-mounted; IM B35 (IM 2001), IM V15 (IM 2011), IM V36 (IM 2031)

Three phase motor, foot-mounted, terminal box top-mounted

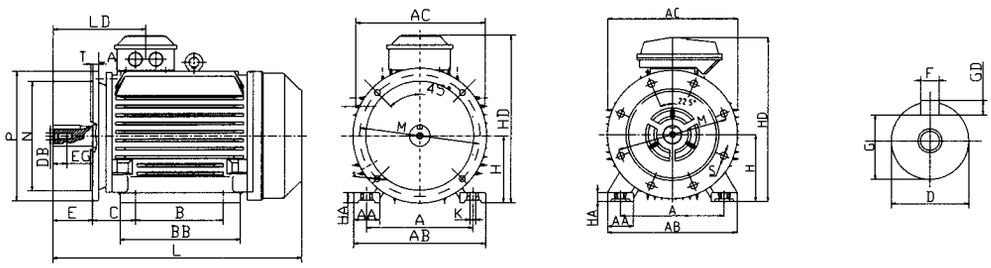

Three phase motor, foot-mounted, terminal box on right hand side

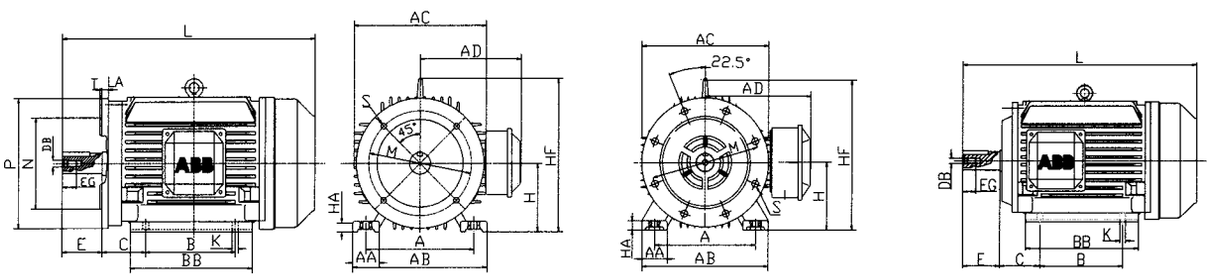

IEC frame size 250

Motor size	Poles	A	AA	AB	AC	AD	B	BB	C	D	DB	E	EG	F	G
160 M	2-8	254	60	325	330	255	210	265	108	42	M16	110	36	12	47
160 L	2-8	254	60	325	330	255	254	310	108	42	M16	110	36	12	47
180 M	2-4	279	70	350	355	270	241	315	121	48	M16	110	36	14	42.5
180 L	4-8	279	70	350	350	270	279	350	121	48	M16	110	36	14	42.5
200 L	2-8	318	70	390	395	305	305	380	133	55	M20	110	39	16	49
225 S	4-8	356	75	435	440	335	286	380	149	60	M20	140	39	18	53
225 M	2	356	75	435	450	335	311	405	149	55	M20	110	39	18	49
225 M	4-8	356	75	435	450	335	311	405	149	60	M20	140	39	18	53
250 M	2	406	80	490	515	395	349	455	168	60	M20	140	39	18	53
250 M	4-8	406	80	490	515	395	439	455	168	65	M20	140	39	18	53

Motor size	Poles	GD	H	HA	HD	HF	K	L	LA	LD	M	N	P	S	T
160 M	2-8	8	160	22	415	380	15	600	15	250	300	250	350	19	5
160 L	2-8	8	160	22	415	380	15	645	15	250	300	250	350	19	5
180 M	2-4	9	180	22	450	420	15	670	18	270	300	250	350	19	5
180 L	4-8	9	180	22	450	420	15	710	18	270	300	250	350	19	5
200 L	2-8	10	200	25	510	470	19	770	20	285	350	300	400	19	5
225 S	4-8	11	225	28	560	520	19	820	20	340	400	350	450	19	5
225 M	2	10	225	28	560	520	19	815	20	310	400	350	450	19	5
225 M	4-8	11	225	28	560	520	19	840	20	340	400	350	450	19	5
250 M	2	11	250	30	645	580	24	930	22	360	500	450	550	19	5
250 M	4-8	11	250	30	645	580	24	930	22	360	500	450	550	19	5

Tolerances:

A, B, C	+, - 0.8	F, FA	ISO h9
D,DA	ISO k6 > Ø 50 mm	H	+ 0, - 0.5
	ISO m6 > Ø 50 mm	N	ISO j6

Above table gives the main dimensions in mm.

For detailed drawings please see our web-pages 'www.abb.com/motors&drives' or contact us.

Dimension drawings

Foot-mounted; IM B3 (IM 1001), IM B6 (IM 1051), IM B7 (IM 1061), IM B8 (IM 1071), IM V5 (IM 1011), IM V6 (IM 1031)

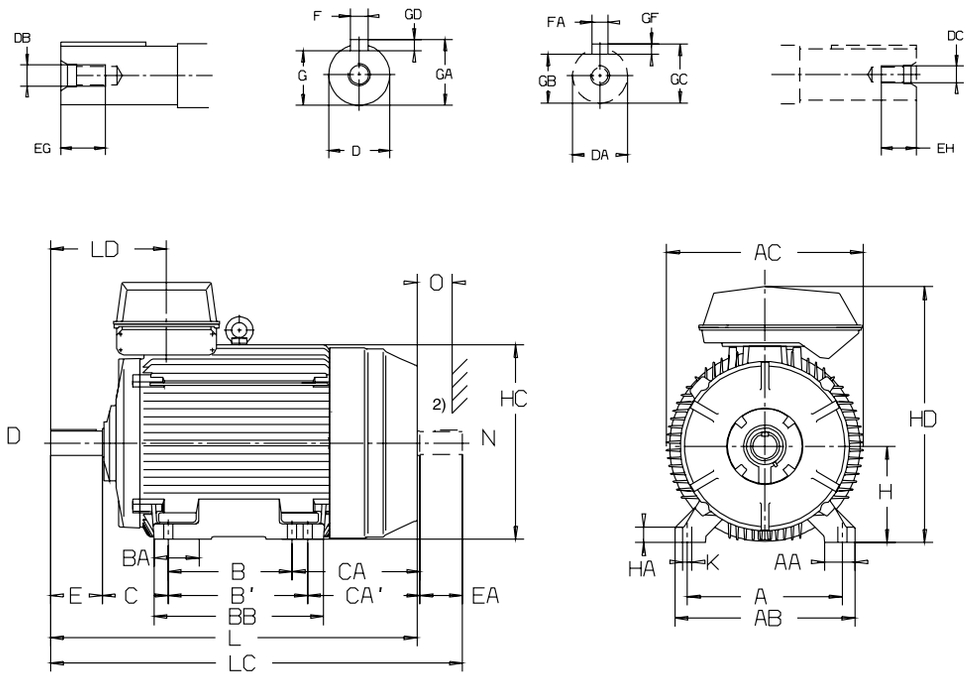

Motor size	Poles	A	AA	AB	AC	B	B '	BA	BB	C	CA	CA '	D	DA	DB	DC	E	EA	EG	EH
280 SM_	2	457	85	530	572	368	419	146	506	190	400	349	65	60	M20	M20	140	140	40	40
	4-12	457	85	530	572	368	419	146	506	190	400	349	75	65	M20	M20	140	140	40	40
315 SM_	2	508	100	590	645	406	457	163	556	216	465	414	65	60	M20	M20	140	140	40	40
	4-12	508	100	590	645	406	457	163	556	216	465	414	80	75	M20	M20	170	140	40	40
315 ML_	2	508	100	590	645	457	508	163	607	216	465	414	65	60	M20	M20	140	140	40	40
	4-12	508	100	590	645	457	508	163	607	216	465	414	90	75	M24	M20	170	140	48	40
355 _	2	610	120	700	740	500	-	161	662	254	460	-	70	70	M20	M20	140	140	40	40
	4-12	610	120	700	740	500	-	161	662	254	460	-	100	90	M24	M24	210	170	48	48

Motor size	Poles	F	FA	G	GA	GB	GC	GD	GF	H	HA	HC	HD	K	L	LA	LC	LD	O [1]
280 SM_	2	18	18	58	69	53	64	11	11	280	40	566	745	24	1088	22	1238	332	100
	4-12	20	18	67.5	79.5	58	69	12	11	280	40	566	745	24	1088	22	1238	332	100
315 SM_	2	18	18	58	69	53	64	11	11	315	50	638	840	30	1218	25	1367	351	115
	4-12	22	20	71	85	67.5	79.5	14	12	315	50	638	840	30	1248	25	1397	381	115
315 ML_	2	18	18	58	69	53	64	11	11	315	50	638	840	30	1269	25	1418	351	115
	4-12	25	20	84	95	67.5	79.5	14	12	315	50	638	840	30	1299	25	1448	381	115
355 S_	2	20	20	62.5	74.5	62.5	74.5	12	12	355	55	725	955	35	1344	25	1494	397	130
	4-12	28	25	90	106	81	95	16	14	355	55	725	955	35	1414	25	1594	467	130

Tolerances:

D, DA	ISO M6
H	+ 0, - 1.0

[1] Cooling distance.
[2] Second shaft end on request.

Above table gives the main dimensions in mm.

For detailed drawings please see our web-pages 'www.abb.com/motors&drives' or contact us.

Dimension drawings

Flange-mounted; IM B5 (IM 3001), IM V1 IM 3001), IM V3 (IM 3031)
IM B14 (IM 3601), IM V18 (IM 3611), IM V19 (IM 3631)

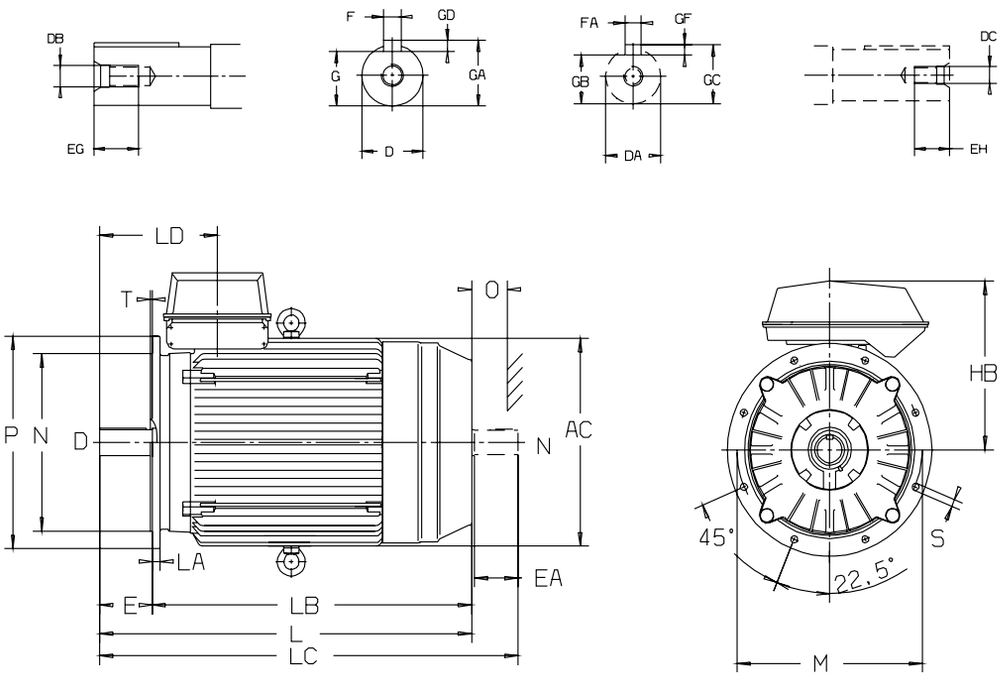

Motor size	Poles	AC	D	DA	DB	DC	E	EA	EG	EH	F	FA	G	GA	GB	GC	GD	GF
280 SM_	2	572	65	60	M20	M20	140	140	40	40	18	18	58	69	53	64	11	11
	4-12	572	75	65	M20	M20	140	140	40	40	20	18	67.5	79.5	58	69	12	11
315 SM_	2	645	65	60	M20	M20	140	140	40	40	18	18	58	69	53	64	11	11
	4-12	645	80	75	M20	M20	170	140	40	40	22	20	71	85	67.5	79.5	14	12
315 ML_	2	645	65	60	M20	M20	140	140	40	40	18	18	58	69	53	64	11	11
	4-12	645	90	75	M24	M20	170	140	48	40	25	20	81	95	67.5	79.5	14	12
355 S_	2	746	70	70	M20	M20	140	140	40	40	20	20	62.5	74.5	62.5	74.5	12	12
	4-12	645	100	90	M24	M24	210	170	48	48	28	25	90	106	81	95	16	14

Motor size	Poles	HB	L	LA	LB	LC	LD	M	N	O [1]	P	S	T
280 SM_	2	465	1088	22	938	1238	332	500	450	100	550	18	5
	4-12	465	1088	22	938	1238	332	500	450	100	550	18	5
315 SM_	2	525	1218	25	1078	1367	351	600	550	115	660	23	6
	4-12	525	1248	25	1078	1397	381	600	550	115	660	23	6
315 ML_	2	525	1269	25	1129	1418	351	600	550	115	660	23	6
	4-12	525	1299	25	1199	1448	381	600	550	115	660	23	6
355 S_	2	600	1344	25	1204	1494	397	740	680	130	800	23	6
	4-12	600	1414	25	1204	1594	467	740	680	130	800	23	6

Tolerances:

D, DA	ISO M6
F	ISO h9
H	+ 0, - 1.0
N	ISO j6 (280) ISO js6 (315)

[1] Cooling distance.
[2] Second shaft end on request.

Above table gives the main dimensions in mm.

For detailed drawings please see our web-pages 'www.abb.com/motors&drives' or contact us.

General purpose cast iron motors Sizes 280-355

Dimension drawings

Foot- and flange-mounted; M B35 (IM 2001), IM V15 (IM 2011), IM V 36 (IM 2031)

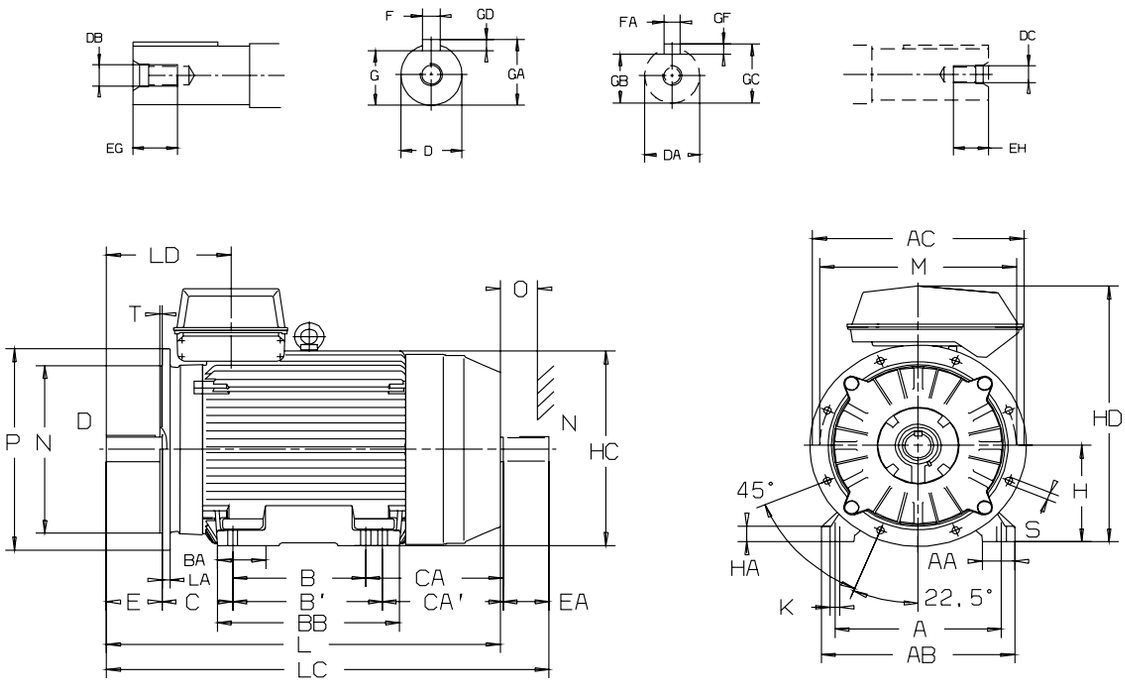

Motor size	Poles	A	AA	AB	AC	B	B '	BA	BB	C	CA	CA '	D	DA	DB	DC	E	EA	EG	EH	F	FA
280 SM_	2	457	85	530	572	368	419	146	506	190	400	349	65	60	M20	M20	140	140	40	40	18	18
	4-12	457	85	530	572	368	419	146	506	190	400	349	75	65	M20	M20	140	140	40	40	20	18
315 SM_	2	508	100	590	645	406	457	163	556	216	465	414	65	60	M20	M20	140	140	40	40	18	18
	4-12	508	100	590	645	406	457	163	556	216	465	414	80	75	M20	M20	170	140	40	40	22	20
315 ML_	2	508	100	590	645	457	508	163	607	216	465	414	65	60	M20	M20	140	140	40	40	18	18
	4-12	508	100	590	645	457	508	163	607	216	465	414	90	75	M24	M20	170	140	48	40	25	20
355 _	2	610	120	700	740	500	-	161	662	254	460	-	70	70	M20	M20	140	140	40	40	20	20
	4-12	610	120	700	740	500	-	161	662	254	460	-	100	90	M24	M24	210	170	48	48	28	25

Motor size	Poles	G	GA	GB	GC	GD	GF	H	HA	HC	HD	K	L	LA	LC	LD	M	N	P	S	T	O [1]
280 SM_	2	58	69	53	64	11	11	280	40	566	745	24	1088	22	1238	332	500	450	550	18	5	100
	4-12	67.5	79.5	58	69	12	11	280	40	566	745	24	1088	22	1238	332	500	450	550	18	5	100
315 SM_	2	58	69	53	64	11	11	315	50	638	840	30	1218	25	1367	351	600	550	660	23	6	115
	4-12	71	85	67.5	79.5	14	12	315	50	638	840	30	1248	25	1397	381	600	550	660	23	6	115
315 ML_	2	58	69	53	64	11	11	315	50	638	840	30	1269	25	1418	351	600	550	660	23	6	115
	4-12	84	95	67.5	79.5	14	12	315	50	638	840	30	1299	25	1448	381	600	550	660	23	6	115
355 S_	2	62.5	74.5	62.5	74.5	12	12	355	55	725	955	35	1344	25	1494	397	645	740	680	23	6	130
	4-12	90	106	81	95	16	14	355	55	725	955	35	1414	25	1594	467	715	740	680	23	6	130

Tolerances:

D, DA	ISO M6
F	ISO h9
H	+ 0, - 1.0
N	ISO j6 (280)
	ISO js6 (315)

[1] Cooling distance.
[2] Second shaft end on request.

Above table gives the main dimensions in mm.

For detailed drawings please see our web-pages 'www.abb.com/motors&drives' or contact us.

Rating plates

For motor sizes 71 to 132 the rating plate gives one current value for the voltage area. That is the highest current that can occur within the voltage area with the given output.

For motor sizes 160 to 355 the rating plate is in table form giving values for speed, current and power factor for six voltages.

Motor sizes 71 to 132

ABB Motors CE

3~motor M2QA 90 S2 A | IEC 34-1

3GQA091101-ASA | EFF2

6205/C3 6205/C3 | IP 55 | Ins.cl F

V	Hz	r/min	kW	cosφ	A
220-240Δ	50	2850	1.5	0.87	5.58
380-420Y	50	2850	1.5	0.87	3.23
440-480Y	60	3420	1.73	0.87	3.30

No 329 11117711 | 21 kg

Motor sizes 160 to 250

ABB ABB Motors CE

3 ~ motor M2QA 180 L4A | EFF2

IEC 180 L 48

S1 | No 292229936

Cert.no | Ins.cl. F | IP 55

V	Hz	kW	r/min	A	cos φ	IA/IN	tE/s
690 Y	50	22	1470	22.86	0.88		
400 Δ	50	22	1470	39.44	0.88		
660 Y	50	22	1465	23.37	0.90		
380 Δ	50	22	1465	40.59	0.90		
415 Δ	50	22	1475	38.90	0.86		
440 Δ	60	25.3	1764	40.06	0.89		

Cat. no 3GQA 182 501 - ADA

6310/C3 6210/C3 | 186 kg

IEC 34-1

Motor sizes 280 to 355

CE ABB Oy, Electrical Machines
LV Motors, Vaasa, Finland

3~Motor M2BAT 315SMB 6 B6

IEC 315 S/M 80

S1 | No. 0230-060100089

Ins.cl. F | IP 55

V	Hz	kW	r/min	A	cos φ	Duty
690 Y	50	90	991	96	0.83	
400 D	50	90	991	166	0.83	
660 Y	50	90	990	100	0.84	
380 D	50	90	990	174	0.84	
415 D	50	90	992	163	0.81	
440 D	60	103	1190	170	0.84	

Prod.code 3GBA313220-ADD

6319/C3 6316/C3 | 870 kg

ABB IEC 60034-1

Motor construction

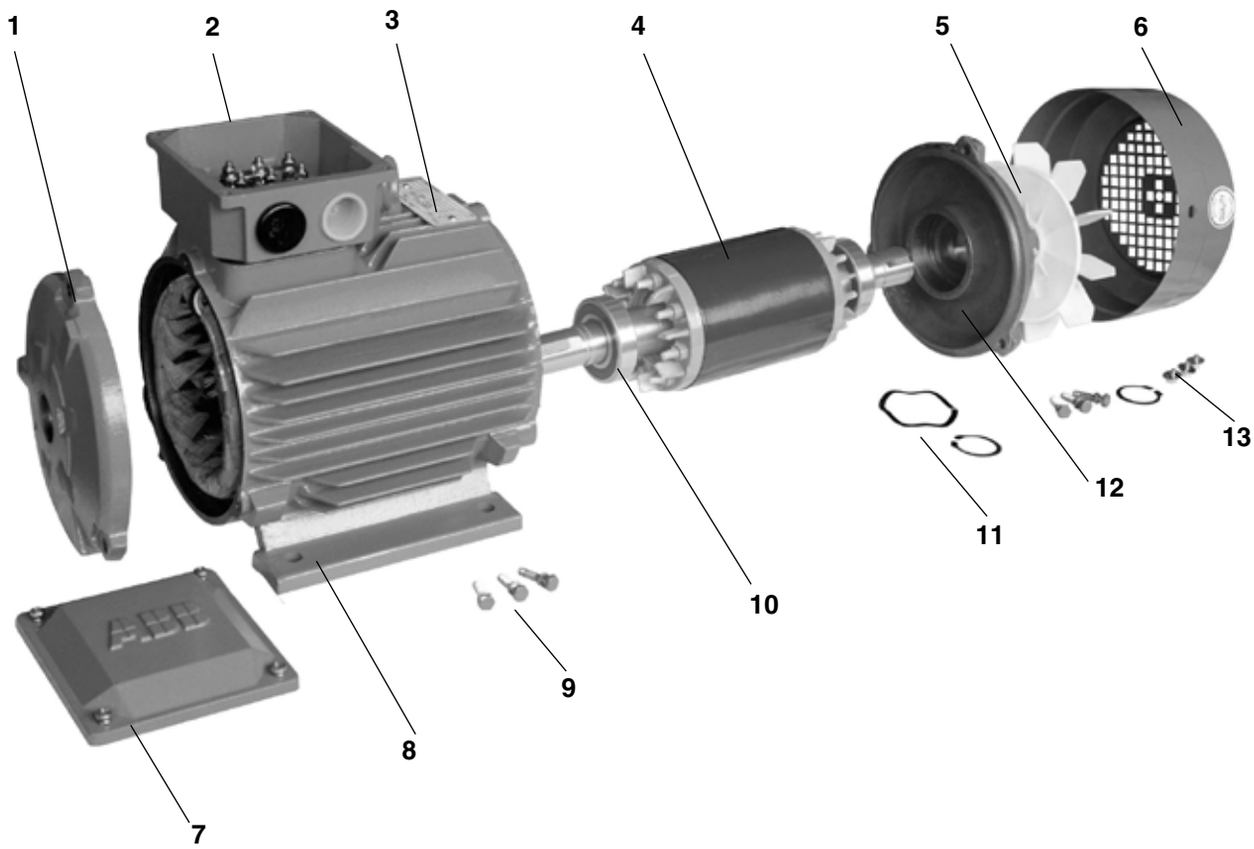

1	Endshield, D-end	8	Stator
2	Terminal box	9	Bolt
3	Rating plate	10	Bearing
4	Rotor	11	Wave-shape spring ring
5	Fan	12	Endshield, N-end
6	Fan cover	13	Screw
7	Terminal box cover		

General purpose cast iron motors in brief, basic design

Motor size		71	80	90	100	112	132	160
Stator	Material	Cast iron HT150 GB5675-85						
	Paint colour shade	Blue, Munsell 8B 4.5/3.25 / NCS 4822 B05G / RAL 5014						
	Paint thickness	Two-pack 821 Acid Polyurethane Lacquer Enamel, thickness ≥ 60 m						
Bearing end shields	Material	Cast iron HT150 GB5675-85						
	Paint colour shade	Blue, Munsell 8B 4.5/3.25 / NCS 4822 B05G / RAL 5014						
	Paint thickness	Two-pack 821 Acid Polyurethane Lacquer Enamel, thickness ≥ 60 m						
Bearings	D-end	6202 DDU C3	6204 DDU C3	6205 DDU C3	6206 DDU C3	6207 DDU C3	6208 DDUC3	6309 DDU C3
	N-end	6202 DDU C3	6204 DDU C3	6205 DDU C3	6206 DDU C3	6206 DDU C3	6207 DDU C3	6209 DDU C3
Axially-locked bearings	Inner bearing cover	As standard, locked at D-end						
Lubrication		Greased for life.						
Rating plate	Material	Stainless steel						
Terminal box	Frame material	Cast iron HT150 GB5675-85						
	Cover material	Cast iron HT150 GB5675-85						
Connections	Cable entries	2xM16x1.5	2xM25x1.5	2xM32x1.5	2xM32x1.5	2xM32x1.5	2xM32x1.5	2xM40x1.5
	Terminals	6 terminals for connection						
Fan	Material	Reinforced glass fiber						
Fan cover	Material	Steel						
	Paint colour shade	Blue, Munsell 8B 4.5/3.25 / NCS 4822 B05G / RAL 5014						
	Paint thickness	Two-pack 821 Acid Polyurethane Lacquer Enamel, thickness ≥ 60 m						
Stator winding	Material Insulation	Copper Insulation class F						
	Winding protection	On request						
Rotor winding	Material	Pressure die-cast aluminium						
Balancing method		Half key balancing as standard						
Key ways		Open key way						
Enclosure		IP 55						
Cooling method		IC 411						

4

General purpose cast iron motors in brief, basic design

Motor size		180	200	225	250	280	315	355
Stator	Material	Cast iron HT150 GB5675-85				Cast iron GG 20/GRS 200		
	Paint colour shade	Blue, Munsell 8B 4.5/3.25 / NCS 4822 B05G / RAL 5014						
	Paint thickness	Two-pack 821 Acid Polyurethane Lacquer Enamel, thickness ≥ 60 m			≥ 70 m	Two-pack epoxy paint, thickness		
Bearing end shields	Material	Cast iron HT150 GB5675-85				Cast iron GG 20/GRS 200, except flange-mounted		
	Paint colour shade	Blue, Munsell 8B 4.5/3.25 / NCS 4822 B05G / RAL 5014						
	Paint thickness	Two-pack 821 Acid Polyurethane Lacquer Enamel, thickness ≥ 60 m				Two-pack epoxy paint, thickness ≥ 70 m		
Bearings	D-end 2 pole	6310 DDU C3	6312 DDU C3	6313 ZZ C3	6314 C3	6316/C4	6316/C4	6316/C3
	D-end 4 to 8 pole					6316/C3	6319/C3	6322/C3
	N-end 2 pole	6210 DDU C3	6212 DDU C3	6213 ZZ C3	6214 C3	6316/C4	6316/C4	6316/C3
	N-end 4 to 8 pole					6316/C3	6316/C3	6319/C3
Axially-locked bearings	Inner bearing cover	As standard, locked at D-end						
Lubrication		Greased for life or regreasable			Regreasable bearings			
Rating plate	Material	Stainless steel				Acid proof stainless steel		
Terminal box	Frame material	Cast iron HT150 GB5675-85				Cast iron GG 15/GRS 150		
	Cover material	Cast iron HT150 GB5675-85				Cast iron GG 15/GRS 150		
Connections	Cable entries	2xM40x1.5	2xM50x1.5	2xM50x1.5	2xM63x1.5	2xM63 + 2xM20		
	Terminals	6 terminals for connection						
Fan	Material	Reinforced glass fiber				Reinforced glass fiber or aluminium		
Fan cover	Material	Steel						
	Paint colour shade	Blue, Munsell 8B 4.5/3.25 / NCS 4822 B05G / RAL 5014						
	Paint thickness	Two-pack 821 Acid Polyurethane Lacquer Enamel, thickness ≥ 60 m				Two-pack epoxy polyester paint, thickness ≥ 80 m		
Stator winding	Material	Copper						
	Insulation	Insulation class F						
	Winding protection	3 PTC thermistors as standard, 150°C						
Rotor winding	Material	Pressure die-cast aluminium						
Balancing method		Half key balancing as standard						
Key way		Open key way						
Enclosure		IP 55				IP 55, higher protection on request		
Cooling method		IC 411						

4

4

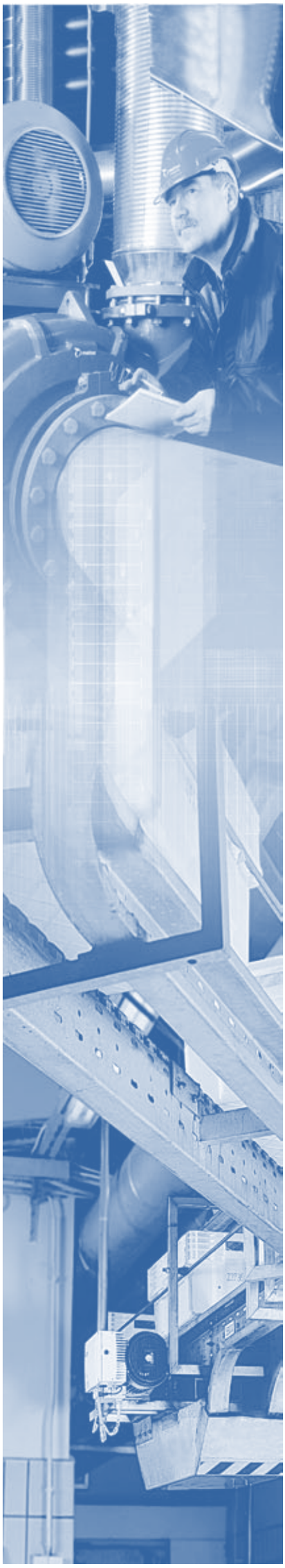

General Purpose Open Drip Proof Motors

Open drip proof squirrel cage three phase low voltage motors, Sizes 250 - 400, 75 to 800 kW

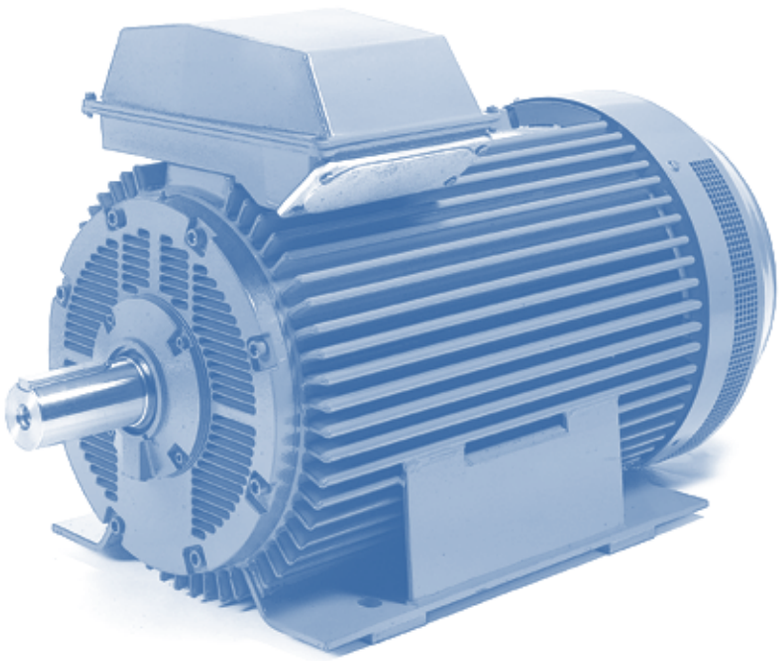

5

www.abb.com/motor&drives
> Motors
> Low voltage motors
> General purpose motors

Mechanical design.....148
Ordering information.....153
Technical data.....154
Variant codes 159
Dimension drawings 161
Rating plates.....165
Open drip proof motors in brief 166

Mechanical design

Stator

The stator frame is made of profile-pressed sheet steel, giving the motor high mechanical stregth, low weight and a good surface finish. The stator core is welded into the stator frame and contributes to its excellent mechanical properties.

Feet and lifting eyes are welded to the stator frame. The terminal box and end shields are of cast iron.

Drain holes

Motors that will be operated in very humid or wet environments, and especially under intermittent duty, should be provided with drain holes. The appropriate IM designation, such as IM V3 (IM 3031), is specified, on the basis of the method of motor mounting.

M2FA motors are fitted with drain holes and plugs. The plugs are open on delivery. Check that the drain holes and grease outlet face downwards, when mounting designation differs from standard horizontal mounting.

In the case of vertical mounting, the upper plug must be hammered home completely. In very dusty environments the drain hole plug should be knocked in.

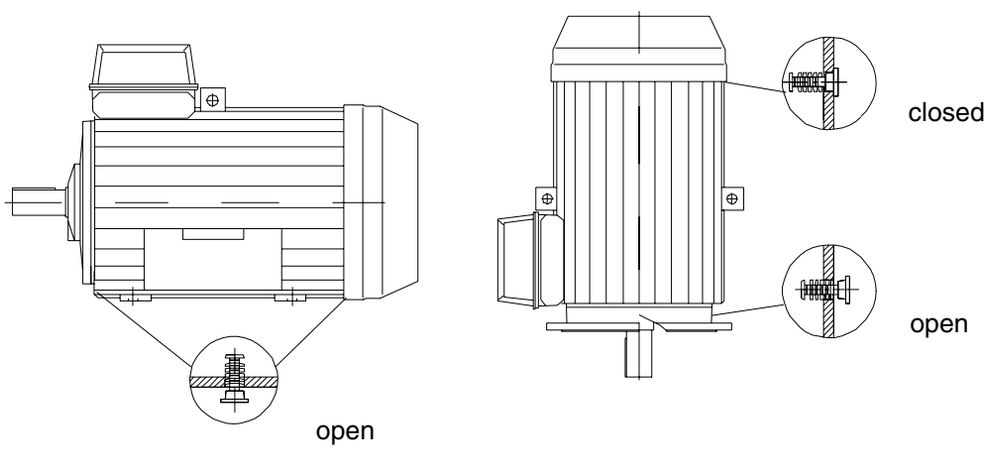

Terminal box

Terminal boxes are mounted either on the top of the motor, or on either side of the motor, see ordering information page .

In basic version the terminal box can be rotated 2x180° to allow cable entry from either side of the motor.

The terminal box is equipped with cable glands or cable boxes as standard, and terminations are suitable for Cu- and Al-cables. Cables are connected to the terminals by cable lugs which are not included with the motor.

To enable us to supply suitable terminations for the motor please state cable type, quantity and size when ordering.

For dimension drawings of terminal boxes, see drawings.

Co-ordination of terminal boxes and cable entries

If no ordering information on the cable is given, it is assumed to be p.v.c. -insulated type and termination parts are supplied according to the table below and on next page.

Deviations from standard design according to the following tables are available on request.

M2FA 280 to 400 motors with top-mounted terminal box
Standard cable entries and cable boxes — Voltage 380 - 690 V, 50 Hz

Motor size M2CA	Terminal box	Flange or adapter	Cable box or cable gland	**Gland thread**	Cable diameter	Max. connection cable area mm²	Terminal bolt size	Voltage/ freq. code
3000 r/min (2 poles)								
250	122/4	3GZF 294730-749	2x 3GZF 294730-613	**2x M63x1.5**	2x Ø32-49	2x150	M12	
280	122/4	3GZF 294730-749	2x 3GZF 294730-613		2x Ø32-49	2x150	M12	
315	142/4	3GZF 294730-753	2x 3GZF 294730-613		2x Ø32-49	2x240	M12	
355 SA	142/4	3GZF 294730-753	2x 3GZF 294730-613		2x Ø32-49	2x240	M12	
355 M_	162/4	3GZF 294730-944	3GZF 294730-301		2x Ø48-60	4x240	M12	D
	142/4	-	3GZF 294730-301		2x Ø48-60	2x240	M12	E
355 L_	162/4	3GZF 294730-944	3GZF 294730-301		2x Ø48-60	4x240	M12	
1500 r/min (4 poles)								
250	122/4	3GZF 294730-749	2x 3GZF 294730-613	**2x M63x1.5**	2x Ø32-49	2x150	M12	
280	122/4	3GZF 294730-749	2x 3GZF 294730-613		2x Ø32-49	2x150	M12	
315	142/4	3GZF 294730-753	2x 3GZF 294730-613		2x Ø32-49	2x240	M12	
355 S_	142/4	3GZF 294730-753	2x 3GZF 294730-613		2x Ø32-49	2x240	M12	
355 M_	162/4	3GZF 294730-944	3GZF 294730-301		2x Ø48-60	4x240	M12	D
	142/4	-	3GZF 294730-301		2x Ø48-60	2x240	M12	E
355 LA	162/4	3GZF 294730-944	3GZF 294730-301		2x Ø48-60	4x240	M12	
355 LKD	162/4	3GZF 294730-944	3GZF 294730-501		2x Ø60-80	4x240	M12	
400 LKA	162/9	3GZF 294730-944	3GZF 294730-501		2x Ø60-80	4x240	M12	D
	162/4	3GZF 294730-944	3GZF 294730-501		2x Ø60-80	4x240	M12	E
400 LKB	162/9	3GZF 294730-944	3GZF 294730-501		2x Ø60-80	4x240	M12	
1000 r/min (6 poles)								
250	122/4	3GZF 294730-749	2x 3GZF 294730-613	**2x M63x1.5**	2x Ø32-49	2x150	M12	
280	122/4	3GZF 294730-749	2x 3GZF 294730-613		2x Ø32-49	2x150	M12	
315	142/4	3GZF 294730-753	2x 3GZF 294730-613		2x Ø32-49	2x240	M12	
355 S_	142/4	3GZF 294730-753	2x 3GZF 294730-613		2x Ø32-49	2x240	M12	
750 r/min (8 poles)								
250	122/4	3GZF 294730-749	2x 3GZF 294730-613	**2x M63x1.5**	2x Ø32-49	2x150	M12	
280	122/4	3GZF 294730-749	2x 3GZF 294730-613		2x Ø32-49	2x150	M12	
315	142/4	3GZF 294730-753	2x 3GZF 294730-613		2x Ø32-49	2x240	M12	
355 S_	142/4	3GZF 294730-753	2x 3GZF 294730-613		2x Ø32-49	2x240	M12	

Voltage/frequency codes:
D - 380-420 VD 50 Hz, 660-690 VY 50 Hz, 440-480 VD 60 Hz
E - 500 VD 50 Hz, 575 VD 60 Hz

Examples:

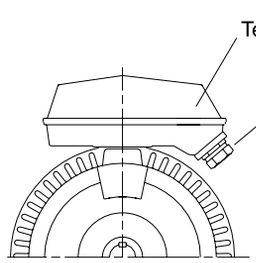

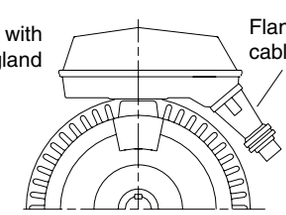

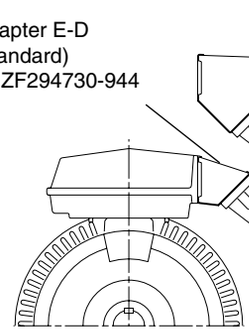

5

Alternatives for cable entries and cable boxes

The tables on previous pages show the standard terminal boxes and termination parts that are delivered when no information on the cable is given.
The table below shows the different alternatives available for cable boxes and cable entries. Other types on request.

Motor size	Terminal box	Opening type	Max.rate current A (Y/D-conn.)	Max. size of conductor mm²	Cable entry mm	Cable box	Blank plate
250	122/4	C (FL21)	210/360	2x150	1xPg29...42 2xPg29...42	1xØ36...52Ø/48...60 1xØ36...52/Ø48...60	MKLN 20
280	122/4	C (FL21)	210/360	2x150	1xPg29...42 2xPg29...42	1xØ36...52Ø/48...60 1xØ36...52/Ø48...60	MKLN 20
315	142/4	D (FL33)	370/640	2x185	1xPg36...42 2xPg36...48	1xØ36...52/Ø48...60 2xØ48...60/Ø50...68	MKLN 30
355, 400	142/4	D (FL33)	370/640	2x240	1xPg36...42 2xPg36...48	1xØ36...52/Ø48...60 2xØ48...60/Ø50...68	MKLN 30
	162/4	E-D [1]	550/950	4x240	1xPg36...42 2xPg36...48	1xØ36...52/Ø48...60 2xØ48...60/Ø50...68 2x2Ø68.. .80	
		E-2D[1]	550/950	4x240	2x1Pg36...42 2x2Pg36...48	2x1xØ36...52/Ø48...60 2x2xØ48...60/Ø50...68 2x2Ø68...80	

[1] Terminal box type 162/4 is used with a combination of one E-opening and one or two D-openings, as described below:

Terminal box 162 with adapting flange 3GZF 294730-501 (E-D) or optional 3GZF 294730-301 (E-2D) :

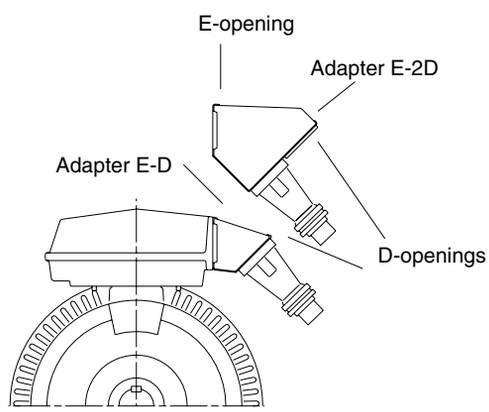

Terminal box 162 with adapting flange:

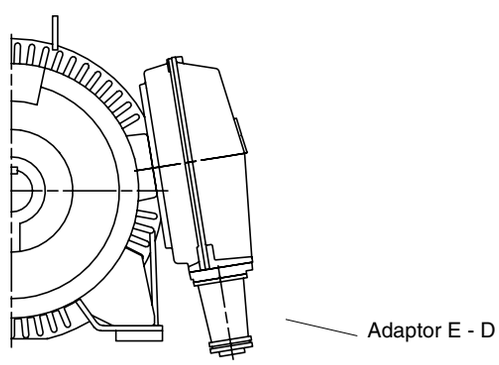

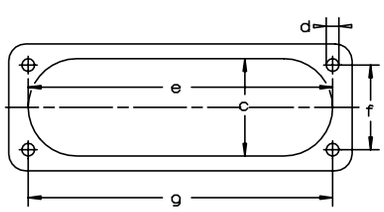

Opening	c	e	f	g	d
C (FL 21)	62	193	62	193	M8
D (FL 33)	100	300	80	292	M10
E (FL 40)	115	370	100	360	M12

Bearings

The motors are normally fitted with single-row deep groove ball bearings as listed in the table on the right. The complete ball bearing designation is stated on the rating plate.

If the bearing at the D-end is replaced with a roller bearing (NU- or NJ-), higher radial forces can be handled. Roller bearings are suitable for belt drive applications.

When there are high axial forces, angular-contact ball bearings should be used. This option is available on request. When a motor with angular-contact ball bearings is ordered, the method of mounting and direction and magnitude of the axial force must be specified. For special bearings, please see variant codes.

Standard bearing types

Motor size	Number of poles	Basic version with deep groove ball bearings D-end	N-end	Version with roller bearings, variant code 037 D-end
250	2	6316/C4	6316/C4	-
	4-8	6316/C3	6316/C3	(NU 316/C3)
280	2	6316/C4	6316/C4	-
	4-8	6319/C3	6316/C3	(NU 319/C3)
315	2	6316/C4	6316/C4	-
	4-8	6319/C3	6316/C3	(NU319/C3)
355	2 [1)]	-	-	-
	4-8	6322/C3	6319/C3	(NU 322/C3)
400	4	6322/C3	6319/C3	(NU 322/C3)

[1)] Please check technical construction with ABB.

Bearing seals

M2FA motors have, as standard, V-rings at both ends. The size and type of suitable seals are in accordance with the table below:

Motor size	Number of poles	d_1	d_2	B_1	b	Standard design Axial seal D-end	N-end	Alternative design Radial seal (DIN 3760)
250	2	80	100	13,5	10	VS 280	VS 280	80x100x10
	4-8	80	100	13,5	10	VS 280	VS 280	80x100x10
280	2	80	100	13,5	10	VS 80	VS 80	80x100x10 1)
	4-8	95	120	13,5	12	VS 80	VS 80	95x120x12
315	2	80	100	13,5	10	VS 80	VS 80	80x100x10 1)
	4-8	95	120	13,5	12	VS 95	VS 80	95x120x12
355	2	95	120	13,5	12	VS 95	VS 95	95x120x12 1)
	4-8	110	140	15,5	12	VS 110	VS 95	110x140x12 1)
400	4-8	110	140	15,5	12	VS 110	VS 95	110x140x12 1)

[1)] Viton-seal

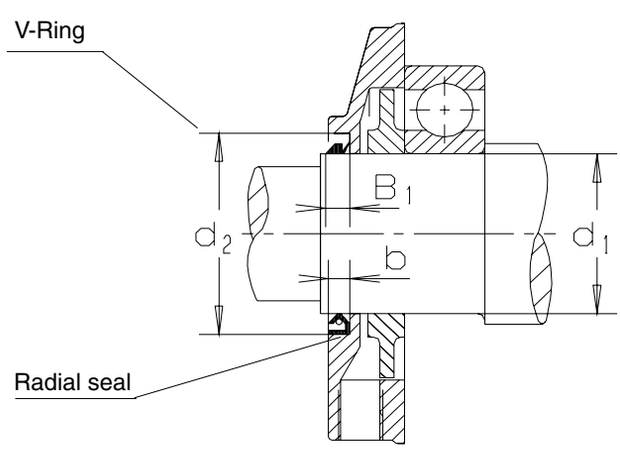

Permissible radial forces

The table below gives the permissible radial force in Newtons, assuming zero axial force. The values are based on normal conditions at 50 Hz and calculated bearing lives of 40,000 h.

Motors are B3 version with force directed sideways. In some cases the strength of the shaft affects the permissible forces.

At 60 Hz the values must be reduced by 10 %. For two-speed motors, the values must be based on the higher speed. Permissible loads of simultaneous radial and axial forces will be supplied on request.

Permissible radial and axial force for a bearing life of 40,000 hours

			Permissible radial force for:				Permissible axial force for [1]:		
			Horizontal mounting, sideways direction of force				Horizontal mounting	Vertical mounting with shaf extension downwards	
		Length of shaft	Ball bearing at point of application:		Roller bearing at point of application:		Direction of force		
Motor size	Number of poles	extension E (mm)	X_0 N	X_{max} N	X_0 N	X_{max} N	Outwards N	Upwards N	Downwards N
250	2	140	5750	4700	–	–	3850	6750	2950
	4	140	7250	5950	20000	12000	4300	7350	3300
	6	140	8300	6800	22600	12000	5250	8500	3900
	8	140	9150	7450	24600	12100	6100	9500	4750
280	2	140	5850	4500	–	–	3800	7150	2250
	4	170	8900	7050	26100	11400	5300	8800	3800
	6	170	10200	8100	29500	11300	6500	10100	4700
	8	170	11200	8900	32100	11100	7450	11200	5500
315	2	140	5800	4800	–	–	3700	7450	1800
	4	170	9000	7300	26200	14000	5000	9250	2750
	6	170	10200	8350	29600	14200	6350	10800	3300
	8	170	11300	9200	32300	14300	7300	12200	4300
355	2	140	6200	5400	–	–	2100	[2]	[2]
	4	210	12100	9800	36500	18100	4100	[2]	[2]
	6	210	13800	11200	41500	20200	5500	[2]	[2]
	8	210	15200	12300	45000	21000	6900	[2]	[2]
400	2	170	[2]	[2]	–	–	[2]	[2]	[2]
	4	210	12200	10500	37500	13500	3900	[2]	[2]
	6	210	[2]	[2]	[2]	[2]	[2]	[2]	[2]
	8	210	[2]	[2]	[2]	[2]	[2]	[2]	[2]

[1] Flange-mounted motors with deep groove ball bearings at D-end. Other designs on request. No simultaneuous radial forces allowed.
[2] On request.

If the radial force is applied between points X_0 and X_{max}, the permissible force F_R can be calculated from the following formula:

$$F_R = F_{xo} - \frac{X}{E}(F_{xo} - F_{x\,max})$$

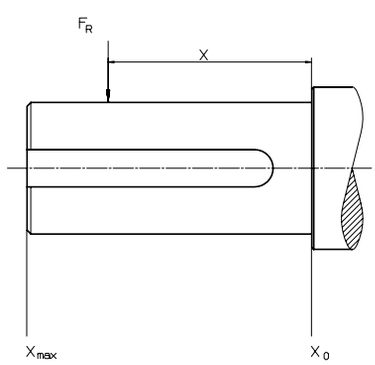

E = length of shaft extension in basic version

Ordering information

When placing an order, please state the following minimum data in the order, as in the example.

The product code of the motor is composed in accordance with the following example.

Motor type	M2FA 315SMA
Pole number	2
Mounting arrangement (IM-code)	IM B3 (IM 1001)
Rated output	200 kW
Product code	3GFA312210-ASB
Variant codes if needed	

A	B	C	D,E,F, G
M2FA	**315 SMA**	**3GFA 312 210 -**	**ADA, 003 etc.**
		1 - 4	5-6 7 8-10 11 12 13 14

A Motor type
B Motor size
C Product code
- **D** Mounting arrangement code
- **E** Voltage and frequency code
- **F** Generation code

G Variant codes

Explanation of the product code:

Positions 1 to 4
3GFA = Open drip proof squirrel cage three phase motor with steel frame

Positions 5 and 6
IEC-frame size
25 = 250 **31** = 315 **40** = 400
28 = 280 **35** = 355

Position 7
Speed (pole pairs)
1 = 2 poles **6** = 8 poles
2 = 4 poles **7** => 12 poles
3 = 6 poles **8** = Two-speed motors
4 = 8 poles **9** = Multi-speed motors
5 = 10 poles

Position 8 to 10
Serial number

Position 11
- (dash)

Position 12
Mounting arrangement
A = Foot-mounted, top-mounted terminal box
L = Foot-mounted, terminal box LHS, seen from D-end
R = Foot-mounted, terminal box RHS,seen from D-end
B = Flange-mounted
L = Foot-mounted, terminal box LHS, seen from D-end
R = Foot-mounted, terminal box RHS,seen from D-end
H = Foot- and flange-mounted, top-mounted terminal box
S = Foot- and flange-mounted, terminal box LHS seen from D-end
T = Foot- and flange-mounted, terminal box RHS seen from D-end

Position 13
Voltage/frequency code
See tables below

Position 14
Generation code
A, B, C...

The product code must, if needed, followed by variant codes.

Code letters for supplementting the product code for voltage and frequency – single speed motors:

A	B	D	E	F	H
380 VY 50 Hz	380 VΔ 50 Hz	380-420 VΔ 50 Hz 660-690 VY 50 Hz 440-480 VΔ 60 Hz	500 VΔ 50 Hz 575 VΔ 60 Hz	500 VY 50 Hz 575 VY 60 Hz	415 VΔ 50 Hz

S	T	U	X
220-240 VΔ 50 Hz 380-420 VY 50 Hz 440-480 VY 60 Hz	660 VΔ 50 Hz	690 VΔ 50 Hz	Other rated voltage, connection or frequency, max. 690 V

Code letters for supplementting the product code for voltage and frequency – two-speed motors:

A	B	D	E	H	S
220 V 50 Hz	380 V 50 Hz	380-400 V 50 Hz 440-480 V 60 Hz	500 V 50 Hz 575 V 60 Hz	400-415 V 50 Hz 460-480 V 60 Hz	220-230 V 50 Hz

General purpose open drip proof motors

Technical data for squirrel cage three phase motors, steel frame

IP 23 S – IC 01 – Insulation class F, temperature rise class B

Output kW		Motor type	Product code	Speed r/min	Effi-ciency %	Power factor cos φ 100%	Current I_N A	Current I_s/I_N	Torque T_N Nm	Torque T_s/T_N	Torque T_{max}/T_N
3000 r/min = 2 poles				**400 V 50 Hz**				**Basic design**			
90		**M2FA 250 SA**	3GFA 251 110-••A	2962	92.6	0.84	169	6.0	290	1.5	2.2
110		**M2FA 250 MA**	3GFA 251 310-••A	2958	93.3	0.84	203	6.2	355	1.6	2.4
132	2)	**M2FA 280 SMA**	3GFA 281 210-••A	2971	94.5	0.84	241	7.0	424	2.1	2.4
160		**M2FA 315 SA**	3GFA 311 110-••A	2977	94.2	0.86	289	6.7	513	1.6	2.5
200		**M2FA 315 SMA**	3GFA 311 210-••A	2975	94.4	0.86	353	7.1	643	1.8	2.6
250		**M2FA 315 MB**	3GFA 311 320-••A	2975	94.5	0.87	431	7.1	804	1.9	2.6
315		**M2FA 315 MC**	3GFA 311 330-••A	2977	94.6	0.84	573	7.8	1012	2.1	2.8
355	1)	**M2FA 315 LA**	3GFA 311 510-••A	2969	94.9	0.89	606	6.8	1142	2.0	2.5
400		**M2FA 315 LB**	3GFA 311 520-••A	2969	94.8	0.88	700	7.3	1288	2.0	2.6
400	5)	**M2FA 355 SA**	3GFA 351 110-••A	2982	94.7	0.88	680	7.1	1280	1.1	2.6
450	5)	**M2FA 355 MA**	3GFA 351 310-••A	2978	95.0	0.89	765	7.4	1443	1.3	3.0
500	5)	**M2FA 355 MB**	3GFA 351 320-••A	2973	95.1	0.90	851	6.7	1606	1.2	2.7
560	5)	**M2FA 355 LA**	3GFA 351 510-••A	2981	95.5	0.89	956	8.7	1794	1.5	3.1
3000 r/min = 2 poles				**400 V 50 Hz**				**High-output design**			
132		**M2FA 250 MB**	3GFA 251 320-••A	2964	93.8	0.83	242	7.1	425	2.0	2.6
160		**M2FA 280 MB**	3GFA 281 320-••A	2971	94.9	0.88	279	7.0	514	2.0	2.7
1500 r/min = 4 poles				**400 V 50 Hz**				**Basic design**			
75		**M2FA 250 SA**	3GFA 252 110-••A	1473	92.6	0.82	146	5.5	486	1.8	2.2
90	1)	**M2FA 250 MA**	3GFA 252 310-••A	1473	93.0	0.83	172	5.6	583	1.9	2.3
110		**M2FA 280 SA**	3GFA 282 110-••A	1476	93.1	0.83	211	5.8	713	1.8	2.4
132		**M2FA 280 SMA**	3GFA 282 210-••A	1477	93.8	0.84	245	5.9	853	1.8	2.3
160		**M2FA 315 SA**	3GFA 312 110-••A	1483	94.6	0.83	297	6.5	1030	1.8	2.5
200		**M2FA 315 SMA**	3GFA 312 210-••A	1482	94.7	0.83	366	6.5	1287	1.8	2.3
250		**M2FA 315 MB**	3GFA 312 320-••A	1481	94.9	0.83	452	6.7	1611	1.7	2.3
315	1)	**M2FA 315 LA**	3GFA 312 510-••A	1477	94.5	0.83	577	6.7	2036	2.2	2.5
315		**M2FA 355 SA**	3GFA 352 110-••A	1484	95.0	0.85	555	6.4	2027	1.7	2.4
355	2)	**M2FA 355 SB**	3GFA 352 120-••A	1485	95.4	0.82	653	6.6	2282	1.9	2.5
400	2)	**M2FA 355 SC**	3GFA 352 130-••A	1484	95.3	0.82	733	5.9	2574	1.7	2.2
450	2)	**M2FA 355 MA**	3GFA 352 310-••A	1485	95.4	0.83	810	6.5	2896	1.8	2.4
500	1)2)	**M2FA 355 LA**	3GFA 352 510-••A	1486	95.4	0.81	920	7.7	3213	2.0	2.8
600		**M2FA 355 LKD**	3GFA 352 540-••A	4)							
710		**M2FA 400 LKA**	3GFA 402 510-••A	4)							
800		**M2FA 400 LKB**	3GFA 402 520-••A	4)							
1500 r/min = 4 poles				**400 V 50 Hz**				**High-output design**			
110	1)	**M2FA 250 MB**	3GFA 252 320-••A	1471	92.8	0.83	211	5.5	714	1.8	2.3
160		**M2FA 280 MB**	3GFA 282 320-••A	1480	94.0	0.81	305	7.2	1032	2.5	2.6

The two bullets in the product code indicate choice of mounting arrangement, voltage and frequency (see ordering information page).

1) Temperature rise class F.
2) Special winding for 415V 50 Hz.
3) 415 V 50 Hz and 440 V 60 Hz on request.
4) On request.
5) Please check technical construction with ABB.

General purpose open drip proof motors

Technical data for squirrel cage three phase motors, steel frame

IP 23 S – IC 01 – Insulation class F, temperature rise class B

Output kW		Motor type	Speed r/min	Effi-ciency %	Power factor cos φ	Current I_N A	Speed r/min	Effi-ciency %	Power factor cos φ	Current I_N A	Moment of inertia J = ¼ GD² kgm²	Weight kg	Sound pressure level L_P dB(A)
3000 r/min = 2 poles			**380 V 50 Hz**				**415 V 50 Hz**				**Basic design**		
90		**M2FA 250 SA**	2955	92.6	0.86	172	2966	92.7	0.81	166	0.4	360	87
110		**M2FA 250 MA**	2958	93.2	0.86	208	2967	93.3	0.81	200	0.47	395	87
132	2)	**M2FA 280 SMA**	2969	94.4	0.86	246	2966	94.1	0.87	227	0.8	540	87
160		**M2FA 315 SA**	2975	94.2	0.87	302	2978	94.2	0.84	282	1.2	695	92
200		**M2FA 315 SMA**	2974	94.3	0.87	370	2978	94.4	0.84	344	1.4	770	92
250		**M2FA 315 MB**	2974	94.4	0.88	449	2976	94.5	0.85	420	1.7	840	92
315		**M2FA 315 MC**	2974	94.6	0.86	576	2971	94.6	0.88	530	1.7	840	92
355	1)	**M2FA 315 LA**	2965	94.8	0.89	635	2970	94.9	0.86	591	2.1	975	92
400		**M2FA 315 LB**	2966	94.7	0.88	720	2970	94.8	0.85	683	2.1	975	92
400	5)	**M2FA 355 SA**	2980	94.6	0.90	700	2983	94.7	0.87	663	3.2	1220	93
450	5)	**M2FA 355 MA**	2975	94.9	0.90	795	2979	95.0	0.87	746	3.5	1320	93
500	5)	**M2FA 355 MB**	2970	95.1	0.90	880	2974	95.1	0.87	830	3.5	1320	93
560	5)	**M2FA 355 LA**	2978	95.5	0.90	980					4.8	1530	93
3000 r/min = 2 poles			**380 V 50 Hz**				**415 V 50 Hz**				**High-output design**		
132		**M2FA 250 MB**	2961	93.8	0.86	247	2960	93.7	0.87	225	0.56	430	88
160		**M2FA 280 MB**	2968	94.8	0.88	288	2973	94.9	0.86	269	1.15	580	89
1500 r/min = 4 poles			**380 V 50 Hz**				**415 V 50 Hz**				**Basic design**		
75		**M2FA 250 SA**	1469	92.9	0.84	152	1474	92.6	0.81	142	0.6	370	80
90	1)	**M2FA 250 MA**	1470	93.2	0.85	178	1474	93.0	0.82	168	0.72	385	76
110		**M2FA 280 SA**	1474	92.8	0.85	217	1477	93.1	0.82	206	1.15	445	81
132		**M2FA 280 SMA**	1474	93.2	0.86	255	1478	93.8	0.83	239	1.4	490	81
160		**M2FA 315 SA**	1481	94.5	0.85	306	1481	94.6	0.84	283	2	680	86
200		**M2FA 315 SMA**	1480	94.6	0.85	379	1483	94.8	0.82	360	2.3	735	86
250		**M2FA 315 MB**	1479	94.7	0.86	470	1482	94.9	0.83	441	2.9	850	86
315	1)	**M2FA 315 LA**	1475	94.5	0.85	596	1473	93.5	0.86	540	3.5	970	87
315		**M2FA 355 SA**	1482	94.8	0.86	584	1485	95.0	0.83	541	5.5	1220	89
355	2)	**M2FA 355 SB**	1484	95.3	0.84	670	1485	95.4	0.83	622	5.5	1220	89
400	2)	**M2FA 355 SC**	1482	95.2	0.85	746	1483	95.1	0.84	685	5.5	1220	89
450	2)	**M2FA 355 MA**	1483	95.3	0.85	835	1484	95.4	0.83	798	6.5	1350	89
500	1)2)	**M2FA 355 LA**	1484	95.3	0.84	949	1486	95.4	0.83	880	7.8	1550	89
600		**M2FA 355 LKD**	4)								9.8	1820	
710		**M2FA 400 LKA**	4)									2700	
800		**M2FA 400 LKB**	4)									2700	
1500 r/min = 4 poles			**380 V 50 Hz**				**415 V 50 Hz**				**High-output design**		
110	1)	**M2FA 250 MB**	1468	92.5	0.85	215	1472	92.8	0.82	206	0.91	430	81
160		**M2FA 280 MB**	1478	93.9	0.84	310	1481	94.0	0.81	298	1.7	550	87

The two bullets in the product code indicate choice of mounting arrangement, voltage and frequency (see ordering information page).

1) Temperature rise class F.
2) Special winding for 415V 50 Hz.
3) 415 V 50 Hz and 440 V 60 Hz on request.
4) On request.
5) Please check technical construction with ABB.

5

General purpose open drip proof motors

Technical data for squirrel cage three phase motors, steel frame

IP 23 S – IC 01 – Insulation class F, temperature rise class B

Output kW		Motor type	Product code	Speed r/min	Efficiency %	Power factor cos φ 100%	Current I_N A	Current I_s/I_N	Torque T_N Nm	Torque T_s/T_N	Torque T_{max}/T_N
1000 r/min = 6 poles				**400 V 50 Hz**				**Basic design**			
45		**M2FA 250 SA**	3GFA 253 110-••A	985	91.0	0.80	94	7.0	436	1.7	2.4
55		**M2FA 250 MA**	3GFA 253 310-••A	984	91.4	0.82	110	6.8	533	1.7	2.4
75		**M2FA 280 SA**	3GFA 283 110-••A	987	92.8	0.76	155	5.8	725	1.9	2.2
90	1)	**M2FA 280 SMA**	3GFA 283 210-••A	987	93.1	0.76	187	6.1	870	2.0	2.3
110		**M2FA 315 SA**	3GFA 313 110-••A	988	93.5	0.81	210	7.4	1062	1.7	2.6
132		**M2FA 315 SMA**	3GFA 313 210-••A	988	94.0	0.83	248	7.6	1275	1.8	2.7
160		**M2FA 315 MB**	3GFA 313 320-••A	988	94.1	0.82	300	8.2	1545	1.9	2.8
185	1)	**M2FA 315 LA**	3GFA 313 510-••A	987	94.4	0.83	346	8.5	1788	1.9	2.9
200		**M2FA 355 SA**	3GFA 353 110-••A	990	94.7	0.82	373	7.1	1927	1.6	2.5
250		**M2FA 355 SB**	3GFA 353 120-••A	990	94.8	0.83	457	7.3	2409	1.6	2.5
300		**M2FA 355 MA**	3GFA 353 310-••A	990	95.1	0.81	541	7.2	2894	1.7	2.4
1000 r/min = 6 poles				**400 V 50 Hz**				**High-output design**			
75	1)	**M2FA 250 MB**	3GFA 253 320-••A	984	92.0	0.81	150	6.8	727	1.8	2.5
110	1)	**M2FA 280 MB**	3GFA 283 320-••A	987	93.6	0.76	227	6.5	1063	2.1	2.3
750 r/min = 8 poles				**400 V 50 Hz**				**Basic design**			
37		**M2FA 250 SB**	3GFA 254 120-••A	734	88.9	0.79	78	5.3	481	1.3	2.3
45	1)	**M2FA 250 MB**	3GFA 254 320-••A	733	89.7	0.78	96	5.5	588	1.4	2.4
55		**M2FA 280 SA**	3GFA 284 110-••A	738	91.2	0.78	117	5.6	711	1.2	2.0
75	1)	**M2FA 280 SMA**	3GFA 284 210-••A	738	91.8	0.76	161	6.1	970	1.4	2.1
90		**M2FA 315 SMA**	3GFA 314 210-••A	739	92.9	0.79	183	6.8	1162	1.7	2.5
110		**M2FA 315 MB**	3GFA 314 320-••A	739	93.4	0.78	224	7.3	1420	1.8	2.6
132	1)	**M2FA 315 LA**	3GFA 314 510-••A	739	93.3	0.78	268	7.2	1706	1.8	2.6
150		**M2FA 355 SA**	3GFA 354 110-••A	740	93.4	0.75	318	5.3	1934	1.3	2.0
185	1)	**M2FA 355 SB**	3GFA 354 120-••A	740	93.9	0.76	381	5.6	2385	1.4	2.0
750 r/min = 8 poles				**400 V 50 Hz**				**High-output design**			
90	1)	**M2FA 280 MB**	3GFA 284 320-••A	739	92.6	0.75	192	6.7	1162	1.6	2.2

The two bullets in the product code indicate choice of mounting arrangement, voltage and frequency (see ordering information page).

1) Temperature rise class F.
2) On request.

5

General purpose open drip proof motors

Technical data for squirrel cage three phase motors, steel frame

IP 23 S – IC 01 – Insulation class F, temperature rise class B

Output kW		Motor type	Speed r/min	Effi-ciency %	Power factor cos φ	Current I_N A	Speed r/min	Effi-ciency %	Power factor cos φ	Current I_N A	Moment of inertia J = ¼ GD² kgm²	Weight kg	Sound pressure level L_P dB(A)
1000 r/min = 6 poles			**380 V 50 Hz**				**415 V 50 Hz**				**Basic design**		
45		**M2FA 250 SA**	983	90.8	0.83	95	983	91.0	0.8	92	1	370	2)
55		**M2FA 250 MA**	983	91.3	0.85	112	983	91.4	0.82	107	1.2	385	2)
75		**M2FA 280 SA**	985	92.7	0.79	158	986	92.7	0.79	146	1.65	440	2)
90	1)	**M2FA 280 SMA**	986	92.9	0.79	190	987	93.1	0.78	178	2.6	475	2)
110		**M2FA 315 SA**	986	93.4	0.85	212	989	93.5	0.78	209	2.9	630	2)
132		**M2FA 315 SMA**	986	93.7	0.85	256	989	94.0	0.81	242	3.8	720	2)
160		**M2FA 315 MB**	986	94.0	0.85	310	989	94.1	0.8	300	4.5	810	2)
185	1)	**M2FA 315 LA**	986	94.2	0.85	352	988	94.4	0.79	340	5.4	915	2)
200		**M2FA 355 SA**	989	94.5	0.84	385	990	94.7	0.81	364	8.7	1220	2)
250		**M2FA 355 SB**	989	94.7	0.84	478	991	94.8	0.81	446	10.2	1320	2)
300		**M2FA 355 MA**	988	94.9	0.85	546	991	95.1	0.82	528	12.5	1550	2)
1000 r/min = 6 poles			**380 V 50 Hz**				**415 V 50 Hz**				**High-output design**		
75	1)	**M2FA 250 MB**	983	91.9	0.84	150	983	92.0	0.81	146	1.5	430	2)
110	1)	**M2FA 280 MB**	986	93.4	0.79	231	988	93.6	0.77	219	2.9	545	2)
750 r/min = 8 poles			**380 V 50 Hz**				**415 V 50 Hz**				**Basic design**		
37		**M2FA 250 SB**	732	88.5	0.81	80	735	88.9	0.77	76	1.2	385	2)
45	1)	**M2FA 250 MB**	731	89.3	0.80	98	734	89.7	0.76	94	1.5	430	2)
55		**M2FA 280 SA**	736	89.9	0.81	119	739	91.2	0.77	114	1.85	460	2)
75	1)	**M2FA 280 SMA**	736	91.7	0.79	161	739	91.8	0.75	157	2.2	500	2)
90		**M2FA 315 SMA**	738	92.7	0.80	186	740	92.9	0.76	179	3.8	720	2)
110		**M2FA 315 MB**	738	93.2	0.80	233	740	93.4	0.76	219	4.5	810	2)
132	1)	**M2FA 315 LA**	737	93.1	0.80	275	740	93.3	0.76	262	5.4	915	2)
150		**M2FA 355 SA**	739	93.3	0.77	322	741	93.4	0.73	311	8.7	1220	2)
185	1)	**M2FA 355 SB**	739	93.7	0.78	393	741	93.9	0.74	372	10.2	1320	2)
750 r/min = 8 poles			**380 V 50 Hz**				**415 V 50 Hz**				**High-output design**		
90	1)	**M2FA 280 MB**	738	92.5	0.78	192	740	92.6	0.74	188	2.9	575	2)

The two bullets in the product code indicate choice of mounting arrangement, voltage and frequency (see ordering information page).

1) Temperature rise class F.
2) On request.

5

General purpose open drip proof motors

Technical data for squirrel cage three phase motors, steel frame, two speed

IP 23 S – IC 01 – Insulation class F, temperature rise class F

Output kW	Motor type	Product code	Speed r/min	Effi-ciency %	Power factor cos φ	Current I_N A	Current I_s/I_N	Torque T_N Nm	Torque T_s/T_N	Torque T_{max}/T_N	Moment of inertia J = ¼ GD² kgm²	Weight kg
1500/1000 r/min = 4/6-poles							**Fan drive, two separate windings**					
55/16	**M2FA 250 SA**	3GFA 258 114-	1476/987	90.5/82.7	0.83/0.74	111/40	6.0/6.8	356/155	1.5/2.4	2.4/2.7	0.6	370
63/18.5	**M2FA 250 MA**	3GFA 258 314-	1478/989	91.2/85.1	0.84/0.70	119/43	6.5/7.8	407/179	1.6/2.8	2.5/3.2	0.72	385
75/25	**M2FA 250 MB**	3GFA 258 324-	1477/984	90.6/84.9	0.85/0.78	140/53	6.2/6.5	485/243	1.6/2.3	2.4/2.4	0.91	430
90/30	**M2FA 280 SMA**	3GFA 288 214-	1480/987	91.0/86.3	0.85/0.76	168/65	6.7/7.2	581/290	1.7/2.6	2.7/2.4	1.4	490
110/32	**M2FA 280 MB**	3GFA 288 324-	1482/988	92.3/87.4	0.84/0.77	204/69	7.4/7.3	709/309	2.1/2.7	2.8/2.7	1.7	550
132/40	**M2FA 315 SMA**	3GFA 318 214-	1484/989	92.6/89.2	0.85/0.79	239/84	6.3/6.4	849/386	1.5/2.1	2.4/2.4	2.3	735
170/50	**M2FA 315 MB**	3GFA 318 324-	1486/988	93.4/89.7	0.83/0.78	310/103	7.3/6.3	1092/483	1.8/2.3	2.8/2.3	2.9	850
200/63	**M2FA 315 LA**	3GFA 318 514-	1486/989	93.9/90.8	0.83/0.76	362/130	7.7/7.4	1285/608	2.0/2.8	2.9/2.7	3.5	970
260/85	**M2FA 355 SA**	3GFA 358 114-	1487/990	94.5/91.8	0.83/0.78	473/171	6.3/7.0	1670/820	1.4/2.3	2.4/2.4	5.5	1220
340/100	**M2FA 355 MA**	3GFA 358 314-	1488/989	95.0/92.0	0.82/0.79	620/199	7.0/6.5	2182/966	1.5/2.1	2.7/2.3	6.5	1320
400/120	**M2FA 355 LA**	3GFA 358 514-	1487/992	94.9/92.1	0.88/0.78	680/240	7.0/8.8	2569/1155	1.3/2.3	2.4/3.0	7.8	1550
1500/750 r/min = 4 - 8 -poles							**Fan drive, Dahlander-connection**					
55/14	**M2FA 250 SA**	3GFA 258 119-	1477/734	90.2/83.6	0.82/0.65	108/37	5.9/4.1	356/182	1.4/1.4	2.3/1.9	0.6	370
67/17	**M2FA 250 MA**	3GFA 258 319-	1478/734	90.9/85.0	0.82/0.66	129/45	6.3/4.1	433/221	1.5/1.5	2.3/1.9	0.72	385
88/22	**M2FA 250 MB**	3GFA 258 329-	1478/734	91.5/86.4	0.83/0.66	167/55	6.7/4.2	569/286	1.7/1.5	2.5/1.9	0.91	430
100/25	**M2FA 280 SMA**	3GFA 288 219-	1478/735	92.0/87.6	0.85/0.68	185/62	6.2/4.1	646/325	1.5/1.5	2.4/1.7	1.4	490
110/28	**M2FA 280 MB**	3GFA 288 329-	1479/735	92.4/88.3	0.86/0.68	199/67	6.7/4.1	710/364	1.7/1.5	2.4/1.7	1.7	550
140/35	**M2FA 315 SMA**	3GFA 318 219-	1485/740	93.5/89.9	0.83/0.64	259/87	6.8/4.7	900/452	1.5/1.6	2.6/1.9	2.3	735
185/46	**M2FA 315 MB**	3GFA 318 329-	1483/738	93.7/90.5	0.85/0.67	333/110	6.5/4.2	1191/595	1.5/1.4	2.4/1.7	2.9	850
220/55	**M2FA 315 LA**	3GFA 318 519-	1485/739	94.2/91.2	0.83/0.64	397/136	7.6/4.6	1415/711	1.7/1.5	2.8/2.0	3.5	975
250/63	**M2FA 355 MA**	3GFA 358 319-	1486/740	94.7/92.2	0.86/0.66	440/148	6.3/4.0	1607/813	1.1/1.0	2.3/1.7	6.5	1320
315/80	**M2FA 355 LA**	3GFA 358 519-	1489/741	95.1/93.0	0.84/0.64	560/195	8.0/5.0	2020/1031	1.7/1.4	2.9/2.0	7.8	1550
1500/1000 r/min = 4/6-poles							**Constant torque, two separate windings**					
45/30	**M2FA 250 SA**	3GFA 259 114-	1480/984	89.2/86.3	0.81/0.71	89/71	6.8/6.2	290/291	1.7/2.4	2.6/2.5	0.6	370
50/32	**M2FA 250 MA**	3GFA 259 314-	1479/984	89.9/87.9	0.84/0.73	96/72	6.3/6.4	323/311	1.5/2.5	2.4/2.5	0.72	385
65/43	**M2FA 250 MB**	3GFA 259 324-	1480/983	89.8/88.2	0.84/0.76	125/92	6.6/6.5	419/418	1.7/2.5	2.5/2.4	0.91	430
75/50	**M2FA 280 SMA**	3GFA 289 214-	1480/984	89.6/87.9	0.86/0.77	140/105	6.2/6.3	484/485	1.5/2.4	2.3/2.4	1.4	490
90/60	**M2FA 280 MB**	3GFA 289 324-	1481/987	91.0/89.3	0.86/0.73	169/131	6.8/6.9	580/581	1.7/2.7	2.5/2.6	1.7	550
120/80	**M2FA 315 SMA**	3GFA 319 214-	1486/988	91.8/91.2	0.85/0.75	225/171	6.3/6.2	771/773	1.5/2.3	2.5/2.3	2.3	735
150/100	**M2FA 315 MB**	3GFA 319 324-	1488/989	92.6/91.8	0.82/0.75	285/215	7.6/6.6	986/966	1.8/2.5	2.9/2.5	2.9	850
185/125	**M2FA 315 LA**	3GFA 319 514-	1486/988	93.4/92.2	0.83/0.73	345/265	7.8/6.8	1189/1208	1.9/2.8	2.9/2.5	3.5	970
200/130	**M2FA 355 SA**	3GFA 359 114-	1487/991	93.5/92.9	0.88/0.83	360/248	7.8/9.0	1284/1253	1.2/2.3	3.0/3.2	8.5	1220
240/160	**M2FA 355 MA**	3GFA 359 314-	1489/991	94.1/93.4	0.84/0.84	439/289	8.6/8.8	1539/1542	1.6/2.4	3.4/2.8	10.2	1320
	M2FA 355 LA	3GFA 359 514-										
1500/750 r/min = 4 - 8 -poles							**Constant torque, Dahlander-connection**					
48/26	**M2FA 250 SA**	3GFA 259 119-	1477/740	88.7/86.8	0.86/0.63	92/68	5.9/5.7	310/336	1.7/2.8	2.3/2.4	1.0	370
58/34	**M2FA 250 MA**	3GFA 259 319-	1478/739	89.2/87.6	0.86/0.66	109/86	6.2/5.8	375/439	1.8/2.9	2.4/2.3	1.2	385
69/38	**M2FA 250 MB**	3GFA 259 329-	1480/740	89.8/88.5	0.87/0.65	126/94	6.5/6.1	445/490	2.0/3.0	2.5/2.0	1.5	430
85/48	**M2FA 280 SMA**	3GFA 289 219-	1480/740	91.2/89.9	0.84/0.65	159/119	5.5/5.4	548/619	1.5/2.7	2.2/2.3	2.6	475
100/55	**M2FA 280 MB**	3GFA 289 329-	1479/740	91.2/90.6	0.87/0.70	183/125	5.4/5.5	646/710	1.6/2.5	2.1/2.2	2.9	545
125/80	**M2FA 315 SMA**	3GFA 319 219-	1481/739	92.0/91.6	0.88/0.75	220/164	6.0/5.8	806/1034	1.3/1.8	2.1/2.0	4.1	755
150/95	**M2FA 315 MB**	3GFA 319 329-	1481/739	92.4/91.9	0.88/0.75	262/194	6.1/5.7	967/1228	1.4/1.8	2.1/2.0	4.9	845
185/120	**M2FA 315 LA**	3GFA 319 519-	1482/739	92.8/92.2	0.88/0.75	325/247	6.5/5.9	1192/1551	1.5/1.9	2.2/2.0	5.8	950
225/125	**M2FA 355 MA**	3GFA 359 319-	1486/743	93.6/91.8	0.91/0.73	386/271	6.7/6.2	1446/1607	1.1/1.6	2.4/2.5	10.2	1320
300/160	**M2FA 355 LA**	3GFA 359 519-	1489/744	94.0/92.5	0.88/0.68	512/368	8.1/7.1	1924/2054	1.5/2.0	2.8/2.9	12.5	1550

The two bullets in the product code indicate choice of mounting arrangement, voltage and frequency (see ordering information page).

Data for other number of poles and bigger frame sizes on request.

General purpose open drip proof motors - Variant codes

Code [1]	Variant	Motor size 250	280	315	355	400
	Balancing					
052	Vibration acc. to grade A (IEC 60034-14).	P	P	P	P	P
417	Vibration acc. to grade B (IEC 60034-14).	P	P	P	P	P
	Bearings and lubrication					
036	Transport lock for bearings.	M	M	M	M	M
037	Roller bearing at D-end.	M	M	M	M	R
043	SPM nipples.	M	M	M	M	M
058	Angular contact bearing at D-end, shaft force away from bearing.	P	P	P	P	P
107	Bearing mounted PT100 resistance elements.	P	P	P	P	P
420	Bearing mounted PTC thermistors.	P	P	P	P	P
	Branch standard designs					
209	Non-standard voltage or frequency (special winding).	P	P	P	P	P
	Coupling					
035	Assembly of customer supplied coupling-half (finish bored and balanced).	M	M	M	M	M
	Drain holes					
066	Modified drain hole position (for specified IM xxxx).	M	M	M	M	M
	Heating elements					
	Motor size: / Element capacity:					
	250-280 / 50 W					
	315 / 2 x 50 W					
	355-400 / 2 x 65 W					
450	Heating element, 100-120 V.	P	P	P	P	P
451	Heating element, 200-240 V.	M	M	M	M	M
	Insulation system					
014	Winding insulation class H.	P	P	P	P	P
	Mounting arrangements					
009	IM 2001 foot/flange mounted, IEC flange, from IM 1001 (B35 from B3).	P	P	P	P	R
	Painting					
114	Special paint colour, standard grade.	M	M	M	M	M
	Protection					
005	Protective roof, vertical motor, shaft down.	M	M	M	M	M
072	Radial seal at D-end.	M	M	M	M	M
	Rating & instruction plates					
002	Restamping voltage, frequency and output, continuous duty.	M	M	M	M	M
095	Restamping output (maintained voltage, frequency), intermittent duty.	M	M	M	M	M
135	Mounting of additional identification plate, stainless.	M	M	M	M	M
161	Additional rating plate delivered loose.	M	M	M	M	M

[1] Certain variant codes cannot be used together.

M = On modification of a stocked motor, or on new manufacture, the number per order may be limited.
R = On request
S = Included as standard
P = New manufacture only

5

Code [1]	Variant	M2FA, motor size 250	280	315	355	400
	Shaft & rotor					
069	Two shaft extensions as per basic catalogue. Standard shaft material.	P	P	P	P	P
070	One or two special shaft extensions, standard shaft material.	P	P	P	P	P
	Stator winding temperature sensors					
121	Bimetal detectors, break type (NCC), (3 in series), 130°C, in stator winding.	M	M	M	M	M
122	Bimetal detectors, break type (NCC), (3 in series), 150°C, in stator winding.	M	M	M	M	M
123	Bimetal detectors, break type (NCC), (3 in series), 170°C, in stator winding.	M	M	M	M	M
125	Bimetal detectors, break type (NCC), (2x3 in series), 150°C, in stator winding.	M	M	M	M	M
127	Bimetal detectors, break type (NCC), (3 in series, 130°C & 3 in series, 150°C), in stator winding.	M	M	M	M	M
435	PTC - thermistors (3 in series), 130°C, in stator winding.	M	M	M	M	M
436	PTC - thermistors (3 in series), 150°C, in stator winding.	S	S	S	S	S
437	PTC - thermistors (3 in series), 170°C, in stator winding.	M	M	M	M	M
439	PTC - thermistors (2x3 in series), 150°C, in stator winding.	M	M	M	M	M
441	PTC - thermistors (3 in series 130°C & 3 in series 150°C), in stator winding.	M	M	M	M	M
442	PTC - thermistors (3 in series 150°C & 3 in series 170°C), in stator winding.	M	M	M	M	M
445	PT100 resistance element (1 per phase) in stator winding.	P	P	P	P	P
446	PT100 resistance elements (2 per phase) in stator winding.	P	P	P	P	P
	Terminal box					
015	Motor supplied in D connection.	P	P	P	P	P
017	Motor supplied in Y connection.	M	M	M	M	M
022	Cable entry LHS (seen from D-end).	P	P	P	P	P
	Testing					
145	Type test report from test of identical motor.	M	M	M	M	M
146	Type test with report for motor from specific delivery batch.	P	P	P	P	P
147	Type test with report for motor from specific delivery batch, customer witnessed.	P	P	P	P	P
148	Routine test report.	M	M	M	M	M
149	Testing according to separate test specification.	R	R	R	R	R
153	Reduced test for classification society.	P	P	P	P	P
760	Vibration level test.	P	P	P	P	P
761	Vibration spectrum test.	P	P	P	P	P
762	Noise level test.	P	P	P	P	P
763	Noise spectrum test.	P	P	P	P	P

[1] Certain variant codes cannot be used together.

M = On modification of a stocked motor, or on new manufacture, the number per order may be limited.
R = On request
S = Included as standard
P = New manufacture only

Dimension drawings

Foot-mounted; IM B3 (IM 1001), IM B6 (IM 1051), IM B8 (IM 1071), IM V5 (IM 1011)
Terminal box top-mounted

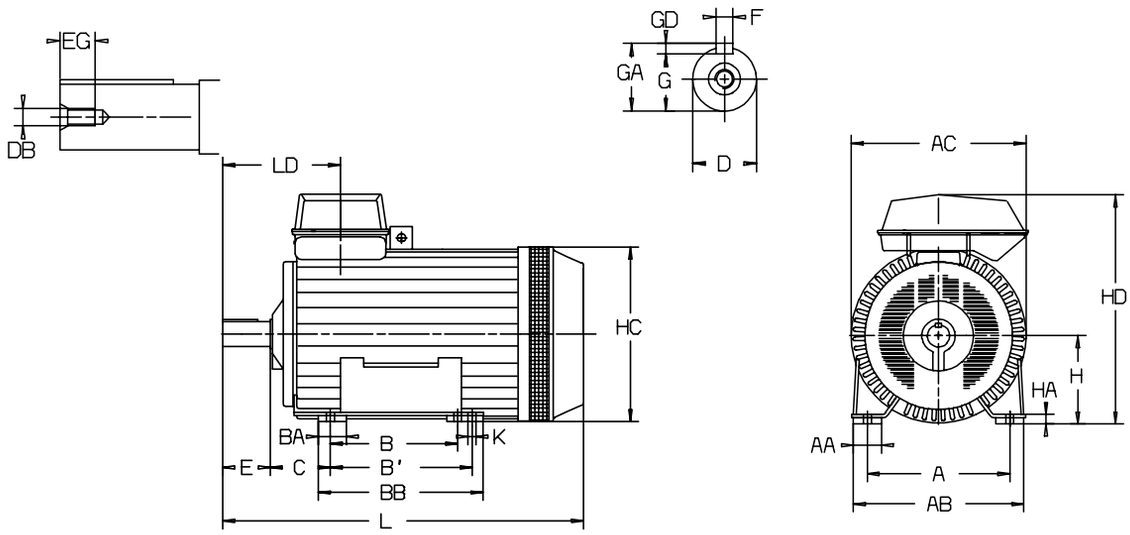

Motor size	Poles	A	AA	AB	AC	B	B'	BA	BB	C	D	DB	E	EG
250 SA	2	406	80	470	497	311	–	100	368	168	65	M20	140	40
250 SA,SB	4-8	406	80	470	497	311	–	100	368	168	75	M20	140	40
250 MA	2	406	80	470	497	349	–	100	406	168	65	M20	140	40
250 MA	4-6	406	80	470	497	349	–	100	406	168	75	M20	140	40
250 MB	4-8	406	80	470	497	349	–	100	406	168	75	M20	140	40
280 SA	4-8	457	80	545	555	368	–	100	450	190	80	M20	170	40
280 SMA	2	457	80	545	555	368	419	100	501	190	65	M20	140	40
280 SMA	4-8	457	80	545	555	368	419	100	501	190	80	M20	170	40
280 MB	2	457	80	545	555	419	–	100	501	190	65	M20	140	40
280 MB	4-8	457	80	545	555	419	–	100	501	190	80	M20	170	40
315 SA	2	508	100	622	624	406	–	100	535	216	70	M20	140	40
315 SA	4-6	508	100	622	624	406	–	100	535	216	90	M24	170	48
315 SMA	2	508	100	622	624	406	457	100	540	216	70	M20	140	40
315 SMA	4-8	508	100	622	624	406	457	100	540	216	90	M24	170	48
315 MB, MC	2	508	100	622	624	457	–	100	540	216	70	M20	140	40
315 MB	4-8	508	100	622	624	457	–	100	540	216	90	M24	170	48
315 LA, LB	2	508	100	622	624	508	–	100	592	216	70	M20	140	40
315 LA, LB	4-8	508	100	622	624	508	–	100	592	216	90	M24	170	48

Motor size	Poles	F	G	GA	GD	H	HA	HC	HD	K	L	LD
250 SA	2	18	58	69	11	250	32	496	672	24	953	381
250 SA,SB	4-8	20	67.5	79.5	12	250	32	496	672	24	953	381
250 MA	2	18	58	69	11	250	32	496	672	24	953	381
250 MA	4-6	20	67.5	79.5	12	250	32	496	672	24	953	381
250 MB	4-8	20	67.5	79.5	12	250	32	496	672	24	1023	381
280 SA	4-8	22	71	85	14	280	32	556	730	24	1020	415
280 SMA	2	18	58	69	11	280	32	556	730	24	1060	385
280 SMA	4-8	22	71	85	14	280	32	556	730	24	1090	415
280 MB	2	18	58	69	11	280	32	556	730	24	1120	385
280 MB	4-8	22	71	85	14	280	32	556	730	24	1150	415
315 SA	2	20	62.5	74.5	12	315	32	625	820	28	1123	392
315 SA	4-6	25	81	95	14	315	32	625	820	28	1153	422
315 SMA	2	20	62.5	74.5	12	315	32	625	820	28	1223	392
315 SMA	4-8	25	81	95	14	315	32	625	820	28	1153	422
315 MB, MC	2	20	62.5	74.5	12	315	32	625	820	28	1223	392
315 MB	4-8	25	81	95	14	315	32	625	820	28	1253	422
315 LA, LB	2	20	62.5	74.5	12	315	32	625	820	28	1293	392
315 LA, LB	4-8	25	81	95	14	315	32	625	848	28	1323	422

Tolerances:

A,B	ISO js 14	H	0, -0.5 (M2FA 250)
D	ISO m6		0, -1.0 (M2FA 280-315)
F	ISO h9		

Above table gives the main dimensions in mm.

For detailed drawings please see our web-site www.abb.com/motors&drives or contact us.

5

General purpose open drip proof motors Sizes 355 - 400

Dimension drawings

Foot-mounted; IM B3 (IM 1001), IM B6 (IM 1051), IM B8 (IM 1071), IM V5 (IM 1011)
Terminal box top-mounted

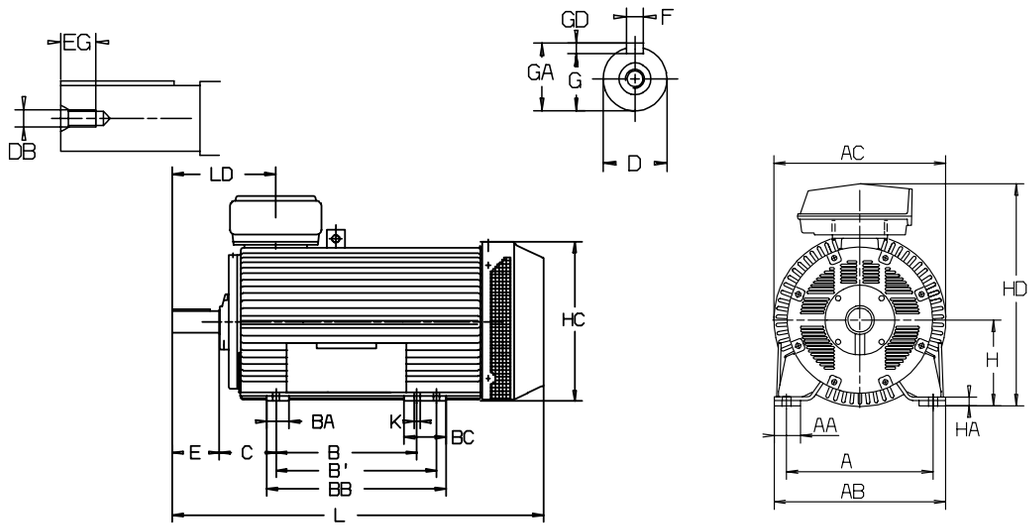

Motor size	Poles	A	AA	AB	AC	B	B'	BA	BB	BC	C	D	DB	E	EG
355 S_	2	610	110	714	716	500	–	100	584	–	254	75	M20	140	40
355 SA	4-8	610	110	714	716	500	–	100	584	–	254	100	M24	210	48
355 SB,SC	4	610	110	714	716	500	–	100	584	–	254	100	M24	210	48
355 SB,SC	6-8	610	110	714	716	500	–	100	584	–	254	100	M24	210	48
355 M_	2	610	110	714	716	560	–	100	644	–	254	75	M20	140	40
355 M_	4	610	110	714	716	560	–	100	644	–	254	100	M24	210	48
355 M_	6-8	610	110	714	716	560	–	100	644	–	254	100	M24	210	48
355 L_	2	610	110	714	716	630	–	100	714	–	254	75	M20	140	40
355 L_	4	610	110	714	716	630	–	100	714	–	254	100	M24	210	48
355 L_	6-8	610	110	714	716	630	–	100	714	–	254	100	M24	210	48
355 LK_	2	610	110	714	716	630	710	100	802	180	254	75	M20	140	40
355 LK_	4-8	610	110	714	716	630	710	100	802	180	254	100	M24	210	48
400 LK_	2	686	140	820	810	710	800	140	935	220	280	90	M24	170	48
400 LK_	4-8	686	140	820	810	710	800	140	935	220	280	100	M24	210	48

Motor size	Poles	F	G	GA	GD	H	HA	HC	HD	K	L	LD
355 S_	2	20	67.5	79.5	12	355	36	713	920	28	1310	397
355 SA	4-8	28	90	106	16	355	36	713	892	28	1380	467
355 SB,SC	4	28	90	106	16	355	36	713	920	28	1380	467
355 SB,SC	6-8	28	90	106	16	355	36	713	892	28	1380	467
355 M_	2	20	67.5	79.5	12	355	36	713	920	28	1370	397
355 M_	4	28	90	106	16	355	36	713	920	28	1440	467
355 M_	6-8	28	90	106	16	355	36	713	892	28	1440	467
355 L_	2	20	67.5	79.5	12	355	36	713	920	28	1450	397
355 L_	4	28	90	106	16	355	36	713	920	28	1520	467
355 L_	6-8	28	90	106	16	355	36	713	892	28	1520	467
355 LK_	2	20	67.5	79.5	12	355	36	713	920	28	1590	397
355 LK_	4-8	28	90	106	16	355	36	713	920	28	1660	467
400 LK_	2	25	81	95	14	400	45	805	1003	35	1786	438
400 LK_	4-8	28	90	106	16	400	45	805	1003	35	1826	478

Tolerances:

A,B	ISO js 14
D	ISO m6
F	ISO h9
H	0, -1.0

Above table gives the main dimensions in mm.

For detailed drawings please see our web-site www.abb.com/motors&drives or contact us.

Dimension drawings

Flange-mounted; IM B5 (IM 3001), IM V1 (IM 3011)

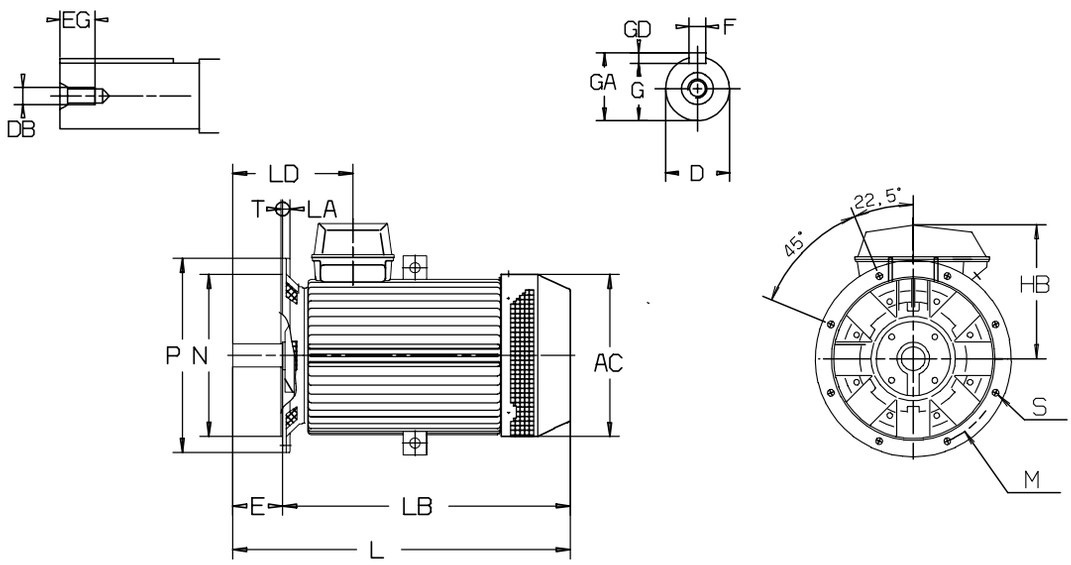

Motor size	Poles	AC	D	DB	E	EG	F	G	GA	GD	HB
250 SA	2	493	65	M20	140	40	18	58	69	11	422
250 SA,SB	4-8	493	75	M20	140	40	20	67.5	79.5	12	422
250 MA	2	493	65	M20	140	40	18	58	69	11	422
250 MA	4-6	493	75	M20	140	40	20	67.5	79.5	12	422
250 MB	4-8	493	75	M20	140	40	20	67.5	79.5	12	422
280 SA	4-8	551	80	M20	170	40	22	71	85	14	450
280 SMA	2	551	65	M20	140	40	18	58	69	11	450
280 SMA	4-8	551	80	M20	170	40	22	71	85	14	450
280 MB	2	551	80	M20	140	40	18	58	69	11	450
280 MB	4-8	551	80	M20	170	40	22	71	85	14	450
315 SA	2	620	70	M20	140	40	20	62.5	74.5	12	505
315 SA	4-6	620	90	M24	170	48	25	81	95	14	505
315 SMA	2	620	70	M20	140	40	20	62.5	74.5	12	505
315 SMA	4-8	620	90	M24	170	48	25	81	95	14	505
315 MB, MC	2	620	70	M20	140	40	20	62.5	74.5	12	505
315 MB	4-8	620	90	M24	170	48	25	81	95	14	505
315 LA	2	620	70	M20	140	40	20	62.5	74.5	12	505
315 LA	4-8	620	90	M24	170	48	25	81	95	14	505
315 LB	2	620	70	M20	140	10	20	62.5	74.5	12	533

Motor size	Poles	L	LA	LB	LD	M	N	P	S	T
250 SA	2	953	22	813	381	600	550	660	23	6
250 SA,SB	4-8	953	22	813	381	600	550	660	23	6
250 MA	2	953	22	813	381	600	550	660	23	6
250 MA	4-6	953	22	813	381	600	550	660	23	6
250 MB	4-8	1023	22	883	381	600	550	660	23	6
280 SA	4-8	1020	25	850	410	600	550	660	23	6
280 SMA	2	1060	25	920	380	600	550	660	23	6
280 SMA	4-8	1090	25	920	410	600	550	660	23	6
280 MB	2	1120	25	980	380	600	550	660	23	6
280 MB	4-8	1150	25	980	410	600	550	660	23	6
315 SA	2	1123	25	983	390	740	680	800	23	6
315 SA	4-6	1153	25	983	420	740	680	800	23	6
315 SMA	2	1223	25	1083	390	740	680	800	23	6
315 SMA	4-8	1153	25	983	420	740	680	800	23	6
315 MB, MC	2	1223	25	1083	390	740	680	800	23	6
315 MB	4-8	1253	25	1083	420	740	680	800	23	6
315 LA	2	1293	25	1153	390	740	680	800	23	6
315 LA	4-8	1323	25	1153	420	740	680	800	23	6
315 LB	2	1293	25	1153	390	740	680	800	23	6

Tolerances:

D	ISO m6
F	ISO h9
N	ISO js6

Above table gives the main dimensions in mm.

For detailed drawings please see our web-site www.abb.com/motors&drives or contact us.

5

Dimension drawings

Flange-mounted; IM B5 (IM 3001), IM V1 (IM 3011)

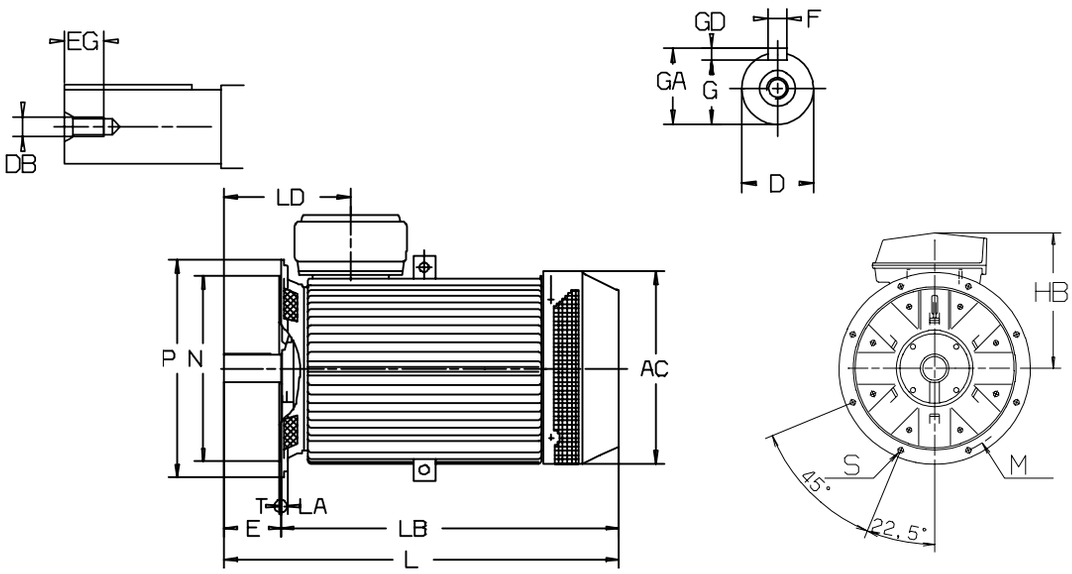

Motor size	Poles	AC	D	DB	E	EG	F	G	GA	GD	HB
355 S_	2	716	75	M20	140	40	20	67.5	79.5	12	565
355 SA	4-8	716	100	M24	210	48	28	90	106	16	537
355 SB,SC	4	716	100	M24	210	48	28	90	106	16	565
355 SB,SC	6-8	716	100	M24	210	48	28	90	106	16	537
355 M_	2	716	75	M20	140	40	20	67.5	79.5	12	565
355 M_	4	716	100	M24	210	48	28	90	106	16	565
355 M_	6-8	716	100	M24	210	48	28	90	106	16	537
355 L_	2	716	75	M20	140	40	20	67.5	79.5	12	565
355 L_	4	716	100	M24	210	48	28	90	106	16	565
355 L_	6-8	716	100	M24	210	48	28	90	106	16	537
355 LK_	2	716	75	M20	140	40	20	67.5	79.5	12	565
355 LK_	4-8	716	100	M24	210	48	28	90	106	16	565
400 LK_	2	810	90	M24	170	48	25	81	95	14	565
400 LK_	4-8	810	100	M24	210	48	28	90	106	16	565

Motor size	Poles	L	LA	LB	LD	M	N	P	S	T
355 S_	2	1310	25	1170	395	740	680	800	23	6
355 SA	4-8	1380	25	1170	465	740	680	800	23	6
355 SB,SC	4	1380	25	1170	465	740	680	800	23	6
355 SB,SC	6-8	1380	25	1170	465	740	680	800	23	6
355 M_	2	1370	25	1230	395	740	680	800	23	6
355 M_	4	1440	25	1230	465	740	680	800	23	6
355 M_	6-8	1440	25	1230	465	740	680	800	23	6
355 L_	2	1450	25	1310	395	740	680	800	23	6
355 L_	4	1520	25	1310	465	740	680	800	23	6
355 L_	6-8	1520	25	1310	465	740	680	800	23	6
355 LK_	2	1590	25	1450	395	740	680	800	23	6
355 LK_	4-8	1660	25	1450	465	740	680	800	23	6
400 LK_	2	1786	28	1616	438	940	880	1000	28	6
400 LK_	4-8	1826	28	1616	478	940	880	1000	28	6

Tolerances:

D	ISO m6
F	ISO h9
N	ISO js6

Above table gives the main dimensions in mm.

For detailed drawings please see our web-site www.abb.com/motors&drives or contact us.

General purpose open drip proof motors

Dimension drawings

Terminal box in standard design with 6 terminals

Top-mounted terminal box:

122/4
142/4

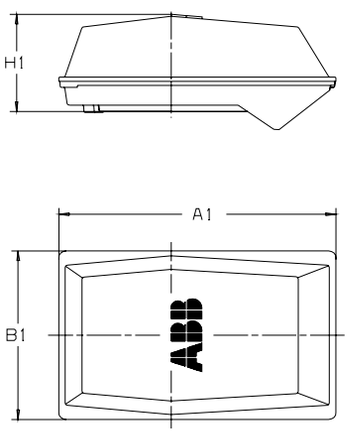

162/4, 162/9 + adapter

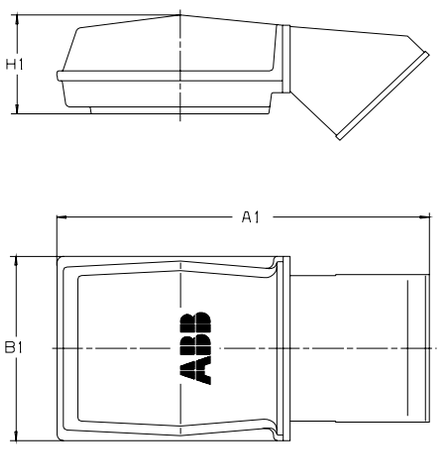

Side-mounted terminal box:

122/5
142/6
162/7, 162/10

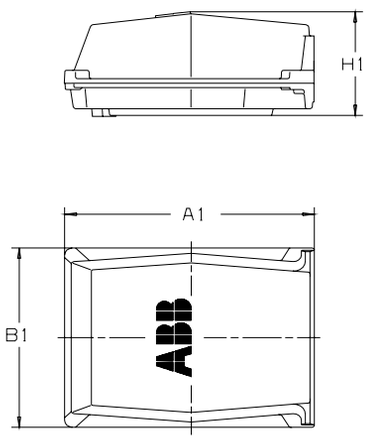

Terminal box type	**Motor size**	A1	B1	H1
Top-mounted terminal box:				
122/4	**250 - 280**	455	280	177
142/4	**315 - 355**	536	349	197
162/4, 162/9 + Adapter	**315 - 400**	787	410	226
Side-mounted terminal box:				
122/5	**250 - 280**	383	280	180
142/6	**315 - 355**	426	347	201
162/7, 162/10	**315 - 400**	508	412	226

Further details on terminal boxes on earlier pages.
For motor dimensions please see dimension drawings on earlier pages.

5

Rating plate

The rating plate is in table form giving values for speed, current and power factor for six voltages.

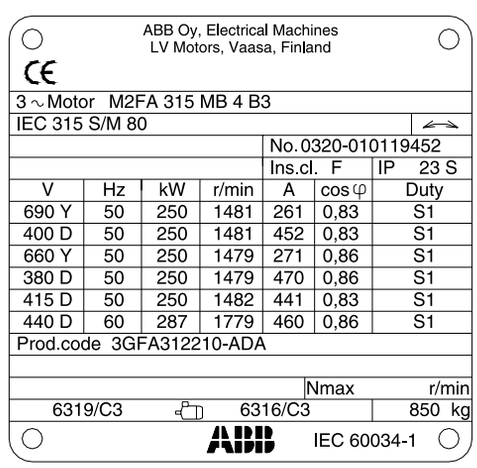

General purpose open drip proof motors in brief, basic design

Motor frame size			250	280	315	355	400
Stator	Material Paint colour shade Paint thickness		Profile-pressed sheet steel Blue, Munsell 8B 4.5/3.25 / NCS 4822-B05G / RAL 5014 Two-pack epoxy paint, thickness ≥ 70 µm				
Bearing end shields	Material Paint colour shade Paint thickness		Cast iron GG 20/GRS 200 Blue, Munsell 8B 4.5/3.25 / NCS 4822-B05G / RAL 5014 Two-pack epoxy paint, thickness ≥ 70 µm				
Bearings	D-end	2-pole 4-12 poles	6316/C4 6316/C3	6316/C4 6319/C3	6316/C4 6319/C4	on request 6322/C3	on request 6322/C3
	N-end	2-pole 4-12 poles	6316/C4 6316/C3	6316/C4 6316/C3	6316/C4 6316/C3	on request 6319/C3	on request 6319/C3
Axially-locked bearings	Inner bearing cover		As standard, locked at D-end				
Bearing seal			V-ring as standard, radial seal on request				
Lubrication			Regreasing nipples, M10x1 Grease for bearing temperatures -30°C to +120°C				
Rating plate			Stainless steel, with individual serial number				
SPM-nipples			On request				
Terminal box	Frame material Cover material Cover screw material		Cast iron GG 15 / GRS 150 Cast iron GG 15 / GRS 150 Steel 5G, coated with zinc and yellow chromated				
Connections	Cable	2 - 4 pole 6 pole	2 x M63 2 x M63		2 x Ø50/80 2 x Ø60		2 x Ø80 2 x Ø60/80
	Terminals		6 terminals for connection with cable lugs (not included)				
Fan	Material		Siluminium				
Fan cover	Material Paint colour shade Paint thickness		Sheet steel Blue, Munsell 8B 4.5/3.25 / NCS 4822-B05G / RAL 5014 Two-pack epoxypolyester paint, thickness ≥ 80 µm				
Stator winding	Material Insulation		Copper Insulation class F; temperature rise class B unless otherwise stated.				
	Winding protection		PTC-thermistors 150°C, 3 in series, as standard				
Rotor winding	Material		Pressure die-cast aluminium				
Balancing method			Half key balancing as standard				
Key way			Closed key way				
Heating elements	On request		50 W	50 W	2x50 W	2x65 W	2x65 W
Drain holes			As standard, open on delivery				
Enclosure			IP 23S				
Cooling method			IC 01				

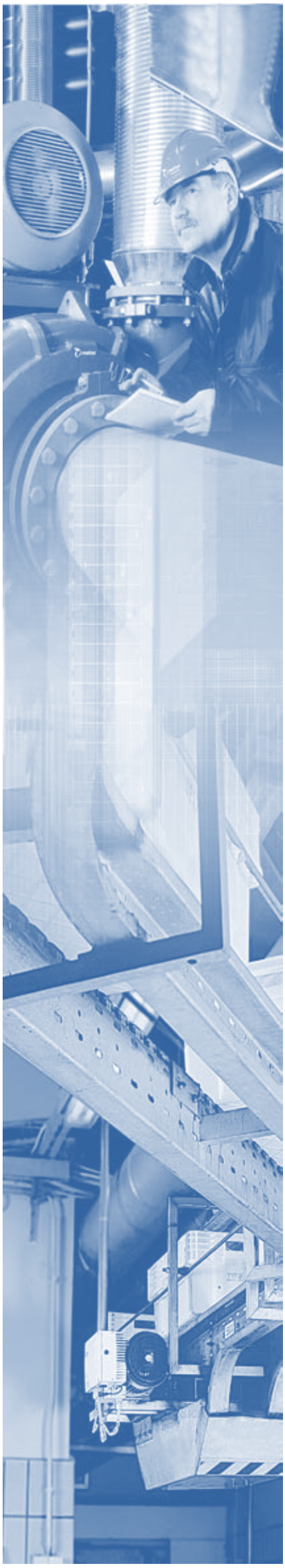

General Purpose Global Motors

Totally enclosed squirrel cage three phase low voltage motors, Sizes 63 - 280, 0.12 to 75 kW

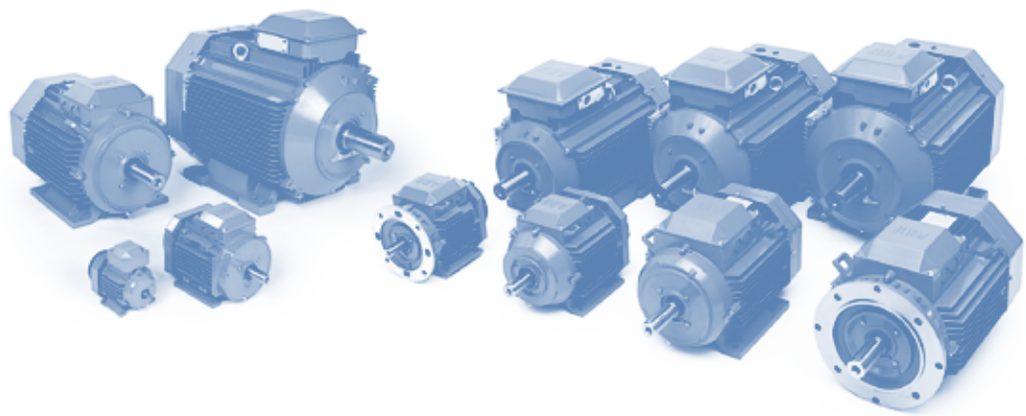

www.abb.com/motor&drives
> Motors
> Low voltage motors
> General purpose motors

6

Features..... 168
Mechanical design..... 169
Ordering information..... 178
Technical data..... 179
Variant codes 183
Dimension drawings 187
Rating plates..... 188
Global motors in brief 200

Global motors

Features

The global economy connects multinational companies with engineering and production in many countries around the world.

Once a motor is specified and put into use, production equipment, including the motors, may need to move from one country to another, Very often the new country will have different voltage, efficiency and safety label requirements.

The new Global motor from ABB puts an end to the confusion and waste. ABB has designed a motor that is multi-labeled and certified for use virtually anywhere. The motors are harmonized to IEC - CENELEC power and frame size standards and are readily available from any of the ABB central stock locations in Europe, Asia and/or America.

Certified for global use

Global motors are certified, labeled and will fulfill requirements for global use:

CE	European safety certified
EFF1	European Community efficiency classification, highest class EFF1
CSA	Canadian safety certified
EEV	Canadian Energy Efficient certified
UR	US safety certified
EPAct	US Energy Efficiency certified

Note: A product that bears the UR logo is approved by Underwriter's Laboratories. This ensures that the product can be used in any machine or application that will be subject to UL certification – without additional testing.

Certificates for ABB Global motors can be found on www.ul.com pages.

6

EPAct requirements for importing products for the U.S.

Motors, rated from 1 to 200 horsepower (0.7 kW to 150 kW), for use within the United States are subject to EPAct legislation. Requirements defined by EPAct include:

– Foot mounted and foot-flange mounted
– 2, 4 and 6 pole motors
– 230 and 460 V ± 10% 60 Hz
– Outputs defined, no derating allowed
– Efficiency must meet NEMA minimum efficiency requirements
– Ambient temperature 40°C

Flange mounted motors will be delivered as global motors however the CC number cannot be printed on the rating plate.

Motors with voltage rating outside 230 and 460 V ± 10% 60 Hz will be delivered as global motors however the CC number cannot be printed on the rating plate.

CC number

Motors covered by EPAct must have the EPAct compliance number stamped on the rating plate. The number for all ABB low voltage motors is CC031A.

The number is mandatory for all motors included in the EPAct scope and will be checked by US Customs inspectors before clearance into the United States.

Voltage

The Global motors can be delivered for all voltages in the range from 200 up to 600 V 60 Hz. The most common voltage in the U.S. is 460 V 60 Hz, however 480 volt systems are frequently specified. In the case of a 480 volt system with a variable frequency drive, the output of the drive to the motor will be 460 volts, therefore allowing a standard motor to be used.

Mechanical design

Stator

Stator framework, bearing shields and feet are made of an extra corrosion resistant aluminum alloy with low copper content with the following exceptions:

M3AA 250-280 has feet and D-end shield of cast iron. M3AA 250-280 2-pole, have also N-end shield of cast iron.

The flange bearing shields of sizes 180 to 280 are made of cast iron.

Drain holes

Motors that will be operated in very humid or wet environments and especially under intermittent duty should be provided with drain holes. The appropriate IM designation, such as IM 3031, is specified on the basis of the method of mounting the motor.

Motors are provided with closable plastic plugs in the drain holes (see diagram below). The plugs will be open on delivery. When mounting the motors it should be ensured that the drain holes face downwards. In the case of vertical mounting, the upper plug must be hammered home completely. In very dusty environments both plugs should be hammered home.

Size 63 is supplied as standard with drain holes on D-end while sizes 71 to 280 are supplied with drain holes both on D-end and N-end.

When mounting arrangement differs from foot mounted IM B3, please mention variant code 066 when ordering. See variant codes 065, 066 and 076 under the heading “Drain holes”.

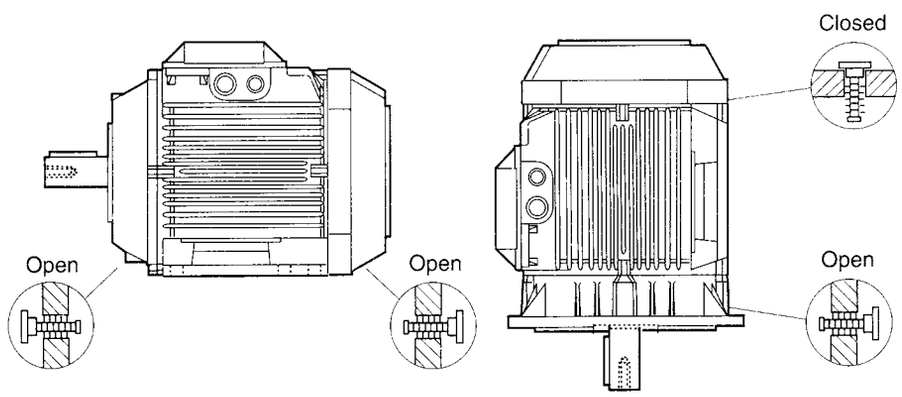

6

Terminal box

Sizes 63 to 180
The terminal box is made of aluminum alloy and is located on top of the stator. The lower part of the box is integrated with the stator. It is provided with 2 knockout openings on each side. Sizes 160-180 also have a third smaller opening. Cable glands are not included.

Sizes 200 to 280
The terminal box and cover are made of deep drawn steel and mounted on top of the stator. The box is bolted to the stator and is not rotatable. The size of the box is the same for all motors.

In the basic design the terminal box is provided with two FL 13 flange openings, one on each side. The opening on the right side, seen from the D-end, is supplied with a flange with two holes for M40 cable glands. On delivery the holes are sealed by means of plastic plugs. Cable glands are not supplied. The opening on the other side is provided with a cover flange.

The motors can also be provided with an extra large terminal box, standard for voltage code S and frame size 280. See variant code 019 under the heading

“Terminal box”. This will increase the dimension HD by 32 mm. The box is supplied with two FL 21 openings. The right opening is provided with a flange with two holes for M63 cable glands. The holes are sealed by means of plastic plugs. Cable glands are not supplied. The opening on the other side is provided with a cover flange. The box can also be provided with an FL 13 opening towards the N-end.

When new motors are manufactured the terminal box can be mounted on the left or the right side. See variant codes 021 and 180 under the heading “Terminal box”.

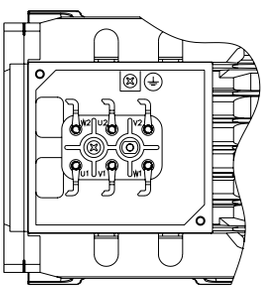

Terminal box size 63-80.

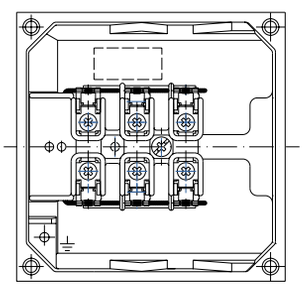

Terminal box size 90-100.

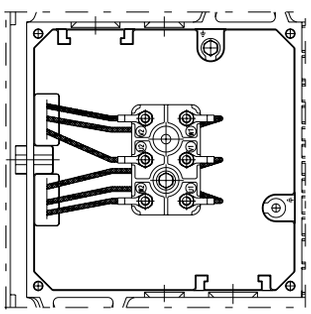

Terminal box size 112-132.

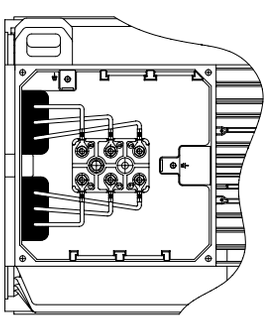

Terminal box size 160-180

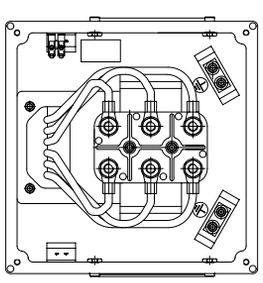

Terminal box size 200-280.

6

Connections

The terminal block is provided with 6 terminals for connecting Cu-cable. The terminals are marked in accordance with IEC 60034-8.

Connection openings

Motor size	Opening	Metric cable entry	Method of connection	Terminal bolt size	Maximum connectable Cu-cable area, mm²
63	Knock-out opening	1 x M16 x 1.5 1 x Pg 11	Screw terminal	M4	2.5
71-80	Knock-out opening	2 x M20 x 1.5 2 x Pg 16	Screw terminal	M4	4
90-100	Knock-out opening	2 x (M25 + M20)	Screw terminal	M4	6
112-132	Knock-out opening	2 x (M25 + M20)	Cable lug	M5	10
160-180	Knock-out opening	2 x (2 x M40 + M16)	Cable lug	M6	35
200-250 [1)]	2 x FL 13	1 x (2 x M40 + M16)	Cable lug	M10	70
280	2 x FL 21	1 x (2 x M63 + M16)	Cable lug	M10	70

Bearings

The motors are provided with bearings according to the tables below.

Greater axial forces can be tolerated if the motors are provided with angular contact ball bearings. Note that in such cases the axial force must only operate in one direction.

Motor versions with roller bearings tolerate greater radial forces.

Basic version with deep groove ball bearings

Basic design motors Motor size		Foot- and flange-mounted motor D-end	 N-end
63		6202-2Z/C3	6201-2Z/C3
71		6203-2Z/C3	6202-2Z/C3
80		6204-2Z/C3	6203-2Z/C3
90		6205-2Z/C3	6204-2Z/C3
100		6306-2Z/C3	6205-2Z/C3
112 [2]	short	6206-2Z/C3	6205-2Z/C3
112 [2]	long	6206-2Z/C3	6206-2Z/C3
132 [2]	short	6208-2Z/C3	6206-2Z/C3
132 [2]	long	6208-2Z/C3	6208-2Z/C3
160		6309-2Z/C3	6209-2Z/C3
180		6310-2Z/C3	6209-2Z/C3
200		6312/C3	6210/C3
225		6313/C3	6212/C3
250		6315/C3	6213/C3
280	2-pole	6315/C3	6213/C3
280	4-pole	6316/C3	6213/C3

[2] short: 132: SA-2, S-4,
long: remaining versions

Alternative designs:

Version with roller bearings

It is recommended to use roller bearings in belt drives for motor sizes 160 - 280.

See variant code 037 under the heading “Bearings and lubrication”.

Motor size		D-end	N-end
90		NU 205	–
100		NU 306	–
160		NU 309 ECP	–
180		NU 310 ECP	–
200		NU 312 ECP	–
225		NU 313 ECP	–
250		NU 315 ECP	–
280	2-pole	NU 315 ECP	–
280	4-pole	NU 316 ECP	–

Version with angular contact ball bearings

See variant codes 058 and 059 under the heading “Bearings and lubrication”.

Motor size		D-end 058	N-end 059
90		7205 B	7204 B
100		7306 B	7205 B
112 [1]	short	7206 BE	7205 BE
112 [1]	long	7206 BE	7206 BE
132 [1]	short	7208 BE	7206 BE
132 [1]	long	7208 BE	7208 BE
160		7309 BE	7209 BE
180		7310 BE	7209 BE
200		7312 BE	7210 BE
225		7313 BE	7212 BE
250		7315 BE	7213 BE
280	2-pole	7315 BE	7213 BE
280	4-pole	7316 BE	7213 BE

[1] short: 132: SA-2, S-4,
long: remaining versions

Transport locking

Motors provided with roller bearings or angular contact ball bearings are fitted with a transport lock to prevent damage to the bearings, due to vibration, during transport.

Axially-locked bearings

The table below shows which of the motor's bearings are axially locked in the bearing seat. In motor sizes 56 to 80 the locking is done by an inner bearing circlip, in motor sizes 90 to 280 by an inner bearing cover.

See also variant code 042 under the heading "Bearings and lubrication".

Motor size	Foot-mounted motors	Flange-mounted motors Large flange	Small flange
63	On request at D-end	On request at D-end	On request at D-end
71-80	On request at D-end	D-end	On request at D-end
90-100	D-end [1]	D-end [1]	D-end [1]
112-132	D-end [1]	D-end	D-end
160-280	D-end	D-end	–

[1] A spring-washer at the N-end presses the rotor toward the D-end.

Lubrication

The motors are delivered with bearing grease for use at normal temperatures in dry or humid environments. The motors are lubricated for ambient temperatures 40°C and in some cases even above 40°C, see table 1 next page.

Motor sizes 63-180 are provided with shielded bearings. On request, motor sizes 90 to 180 are provided with grease nipples for regreasing, see variant code 041 under the heading "Bearings and lubrications".

Motor sizes 200-280 are provided with grease nipples for re-greasing as standard.

The lubrication interval L_1, suitable for relubricated bearings, is defined as the number of operating hours after which 99 per cent of the bearings are adequately lubricated.

Lubrication intervals and grease quantities are specified on a plate on the motor as well as in the manual supplied with the motor.

The grease lifetime $L_{10,}$ suitable for permanent lubricated bearings, is defined as the number of operating hours after which 90 per cent of the bearings are adequately lubricated. 50 per cent of the bearings achieve two times this figure. Maximum lifetime, however, should be regarded as 40000 hours.

In case of high ambient temperatures the shaft loads must be reduced compared to permissible loadings in the table (see pages 174 to 177), please contact ABB.

Table 1: Grease lifetime L_{10} in deep groove ball bearings of type 2Z in horizontally mounted motors in continuous running duty.

Motor	r/min	Ambient temperature and rated output											
		25 °C		40 °C		50 °C		60 °C		70 °C		80 °C	
		Basic	High	Basic	High	Basic	High	Basic	High	Basic	High	Basic	High
63	3000												27000
	1500	40000	40000	40000	40000	40000	40000	40000	40000	40000	40000	40000	37000
71	3000												27000
	1500	40000	40000	40000	40000	40000	40000	40000	40000	40000	40000	40000	37000
80	3000								30000	24000	19000		
	1500	40000	40000	40000	40000	40000	40000	40000	40000	40000	29000	40000	
90	3000							30000	24000	19000	15000		
	1500	40000	40000	40000	40000	40000	40000		40000	24000	40000	40000	
100	3000				40000		35000		22000	27000	14000	17000	
	1500	40000	40000	40000	33000	40000	21000	40000		33000		21000	
112	3000				40000		30000	26000	17000				
	1500	40000	40000	40000	40000	40000		27000					
132	3000				24000			23000					
	1500	40000	40000	40000	40000	40000	22000	40000		35000			
160	3000				31000	26000	17000	14000	9000				
	1500	40000	40000	40000	40000	40000	25000	37000					
180	3000		38000	38000	34000	34000	29000	20000	15000	10000	8000		
	1500	40000	40000	40000	38000	40000	20000	28000		15000			

In vertically mounted motors, the grease lifetime is half the figures above.
For applications corresponding to the empty cells in the table, please contact ABB. These applications can imply reduced lifetime for bearings and winding.
Motors with roller bearings (optional) have considerably shorter grease life. For continuous operation regreasing nipples should be considered.

Lubrication intervals

ABB follows the L1-principle in defining lubrication interval. That means that 99% of the motors are sure to make the interval time. The lubrication intervals can also be calculated according to the L10-principle, which are normally doubled compared to L1-values. Values available from ABB at request.

The table below gives lubrication intervals according to the L1-principle for different speeds. The values are valid for horizontal mounted motors (B3), with about 80°C bearing temperature and using good quality grease with lithium complex soap and with mineral or PAO-oil.

For more information, see ABB's Low Voltage Motors Manual.

6

Frame size	Amount of grease g	3600 r/min	3000 r/min	1800 r/min	1500 r/min
Ball bearings:		lubrication intervals in duty hours			
180	30	6000	8000	13500	16000
200	40	4000	6000	11000	13000
225	50	3000	5000	10000	12500
250	60	2500	4000	9000	11500
280	35	2000	3500	-	-
280	70	-	-	8000	10500

Frame size	Amount of grease g	3600 r/min	3000 r/min	1800 r/min	1500 r/min
Roller bearings: lubrication intervals in duty hours					
180	30	3000	4000	7000	8000
200	40	2000	3000	5500	6500
225	50	1500	2500	5000	6000
250	60	1300	2200	4500	5700
280	35	1000	1800	-	-
280	70	-	-	4000	5300

Permissible loading on shaft

Pulley diameter

When the desired bearing life has been determined the minimum permissible pulley diameter can be calculated with FR, according to the formula:

$$D = \frac{1.9 \bullet 10^7 \bullet K \bullet P}{n \bullet F_R}$$

where:

D = diameter of pulley, mm
P = power requirement, kW
n = motor speed, r/min.
K = belt tension factor, dependent on belt type and type of duty. A common value for V-belts is K = 2.5
F_R = permissible radial force according to the tables

Bearing life

The nominal life is defined as the number of hours that are attained or exceeded by 90% of identical bearings, in a large test series, under certain specified conditions. 50% of the bearings attain a life of as much as 5 times this figure.

The life of bearings is dependent on various factors such as bearing load, motor speed, operating temperature and the purity of the grease. The permissible radial and axial loading for different motor sizes is shown in the table on the following pages.

The table is valid for 50 Hz. For 60 Hz and/or some other bearing life than specified in the table the values are changed according to the table on the right.

The table values assume the occurrence of only radial or axial forces. In the case of simultaneous radial and axial forces information can be supplied on request. It is assumed that the radial force is applied at the end of the motor shaft.

Permissible force at changed bearing life or supply frequency

Bearing life in hours at		Permissible force, as percentage of value in tables
50 Hz	60 Hz	
25,000	21,000	100% of value for 25,000 hours
40,000	33,000	100% of value for 40,000 hours
63,000	52,000	86% of value for 40,000 hours
80,000	67,000	80% of value for 40,000 hours

Permissible radial forces

The table at right shows the permissible radial force in Newton assuming zero axial force.

Permissible loads of simultaneous radial and axial forces will be supplied on request.

The bearing life, L_{10}, is calculated according to SKF's theory on bearing life $L10_{aah}$, which also takes the purity of the grease into consideration. An adequate lubrication is a necessary prerequisite for the table at right.

If the radial force is applied between points X_0 and X_{max}, the permissible force F_R can be calculated from the following formula:

$$F_R = F_{X0} - \frac{X}{E}(F_{X0} - F_{Xmax})$$

E = length of shaft extension in basic version.

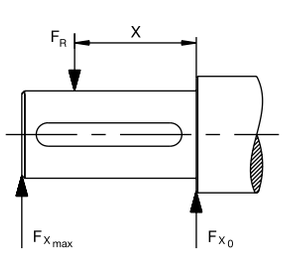

Motor size	No. of poles	Length of shaft extension E (mm)	Ball bearings Basic design with deep groove ball bearings 25,000 hrs FX_0 (N)	FX_{max} (N)	40,000 hrs FX_0 (N)	FX_{max} (N)
63	2	23	490	400	490	400
	4	23	490	400	490	400
71	2	30	680	570	680	570
	4	30	680	570	680	570
80	2	40	630	750	930	750
	4	40	930	750	930	750
90	2	50	1010	810	1010	810
	4	50	1010	810	1010	810
100[1)]	2	60	2280	1800	2280	1800
	4	60	2280	1800	2280	1800

[1)] Basic design with 63-series bearings at the D-end.

Permissible radial forces
Motor sizes 112 to 180

Motor size	No. of poles	Length of shaft extention E (mm)	Ball bearings Basic design with deep groove ball bearings 25,000 hrs FX_0 (N)	FX_{max}(N)	40,000 hrs FX_0 (N)	FX_{max}(N)	Alternative design with 63-series bearings 25,000 hrs FX_0 (N)	FX_{max}(N)	40,000 hrs FX_0 (N)	FX_{max}(N)	Roller bearings Alternative design with roller bearings 25,000 hrs FX_0 (N)	FX_{max}(N)	40,000 hrs FX_0 (N)	FX_{max}(N)
112 M	2	60	1800	1420	1620	1280	2160	1700	2160	1700				
	4	60	1790	1410	1590	1250	2160	1700	2160	1700				
132 SA	2	80	3020	2360	2740	2140	4070	3180	3670	2870				
132 SB	2	80	3020	2360	2730	2130	4060	3170	3670	2870				
132 S	4	80	3120	2440	2790	2180	4090	3200	3830	2990				
132 M	4	80	3080	2410	2750	2150	4100	3200	3780	2950				
160 MA	2	110	4470	3500	4470	3500					4470	3500	4470	3500
160 M	2	110	4470	3500	4470	3500					4470	3500	4470	3500
	4	110	4470	3500	4470	3500					4470	3500	4470	3500
160 L	2	110	4470	3500	4470	3500					4470	3500	4470	3500
	4	110	4470	3500	4470	3500					4470	3500	4470	3500
180 M	2	110	6900	5550	6360	5110					7338	5900	7340	5900
	4	110	7100	5710	6470	5200					7338	5900	7340	5900

Permissible radial forces
Motor sizes 180 to 280

Motor size	No. of poles	Length of shaft extention E (mm)	Ball bearings Basic design with deep groove ball bearings 25,000 hrs FX_0 (N)	FX_{max} (N)	40,000 hrs FX_0 (N)	FX_{max} (N)	Roller bearings Alternative design with roller bearings 25,000 hrs FX_0 (N)	FX_{max} (N)	40,000 hrs FX_0 (N)	FX_{max} (N)
180 L	4	110	7050	5670	6410	5150	7340	5900	7340	5900
200 MLB	2	110	4930	4060	4360	3590	9460	7790	9460	7790
	4	110	5290	4360	4630	3810	9460	7790	9460	7790
200 MLC	2	110	4920	4050	4360	3590	9460	7790	9460	7790
225 SMB	4	140	5750	4870	5030	4260	9810	8300	9810	8300
225 SMC	2	110	5370	4510	4750	3990	10600	8900	10600	8900
	4	140	5720	4840	5000	4230	9810	8300	9810	8300
250 SMB	2	140	6960	5610	6150	4960	11290	9100	11290	9100
	4	140	7620	6140	6680	5380	14330	11550	14330	11550
250 SMC	2	140	6960	5610	6150	4960	11290	9100	11290	9100
280 SMB	4	140	7510	6100	6590	5350	17850	14500	16060	13050
280 SMC	4	140	7510	6100	6590	5350	17850	14500	16060	13050

Permissible axial forces

The following tables give the permissible axial forces in Newton, assuming zero radial force. The values are based on normal conditions at 50 Hz with standard bearings and calculated bearing lives of 20,000 and 40,000 hours.

At 60 Hz the values are to be reduced by 10%.

For two-speed motors, the values are to be based on the higher speed. The permissible loads of simultaneous radial and axial forces will be supplied on request.

Given axial forces F_{AD}, assumes D-bearing locked by means of locking ring.

Mounting arrangement IM B3

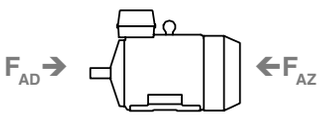

Motor size	20,000 hours				40,000 hours			
	2-pole		4-pole		2-pole		4-pole	
	F_{AD} N	F_{AZ} N	F_{AD} N	F_{AZ} N	F_{AD} N	F_{AZ} N	F_{AD} N	F_{AZ} N
63	790	390	865	465	720	320	780	380
71	985	485	1070	570	900	400	970	470
80	1305	705	1420	820	1185	585	1285	685
90	1360	930	1490	1070	1225	800	1335	915
100	2805	1945	3075	2215	2540	1680	2760	1900
112 M	1500	1500	1600	1600	1320	1320	1390	1390
132 SA	2570	2570	-	-	2260	2260	-	-
132 SB	2570	2570	-	-	2260	2260	-	-
132 S	-	-	2770	2770	-	-	2440	2440
132 M	-	-	2750	2750	-	-	2420	2420
132 MA	-	-	-	-	-	-	-	-
160 MA	4730	4730	-	-	4220	4220	-	-
160 M	4730	4730	5230	5230	4220	4220	4640	4640
160 L	5240	5240	5220	5220	4650	4650	4630	4630
180 M	4660	4660	4950	4950	4250	4250	4500	4500
180 L	-	-	4870	4870	-	-	4390	4390
200 MLB	3050	3050	3850	3850	2430	2430	3050	3050
200 MLC	3050	3050	-	-	2430	2430	-	-
225 SMB	3440	3440	4340	4340	2730	2730	3440	3440
225 SMC	3440	3440	4340	4340	2730	2730	3440	3440
250 SMB	4180	4180	5260	5260	3320	3320	4180	4180
250 SMC	4180	4180	5260	5260	3320	3320	4180	4180
280 SMB	5000	5000	6100	6100	4400	4400	5300	5300
280 SMC	5000	5000	6100	6100	4400	4400	5300	5300

Mounting arrangement IM V1

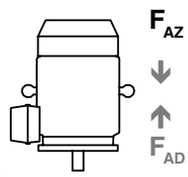

Motor size	20,000 hours				40,000 hours			
	2-pole		4-pole		2-pole		4-pole	
	F_{AD} N	F_{AZ} N	F_{AD} N	F_{AZ} N	F_{AD} N	F_{AZ} N	F_{AD} N	F_{AZ} N
63	790	380	875	455	725	310	790	370
71	998	470	1085	555	910	385	985	455
80	1320	685	1445	790	1200	565	1310	655
90	1390	900	1525	1035	1255	770	1370	880
100	2855	1890	3135	2155	3320	2340	3420	2425
112 M	2290	2170	2490	2330	2680	2510	2770	2590
132 SA	3550	3370	-	-	-	-	-	-
132 SB	3560	3360	-	-	-	-	-	-
132 S	-	-	3910	3630	4160	3880	4320	3990
132 M	-	-	3910	3590	-	-	4330	3930
132 MA	-	-	-	-	4180	3850	-	-
160 MA	4940	4520	-	-	-	-	5520	4960
160 M	4960	4500	5500	4960	5540	4900	5540	4900
160 L	5520	4960	5560	4880	5420	4680	5170	4280
180 M	4990	4330	5400	4500	-	-	-	-
180 L	-	-	5390	4350	5770	4630	5930	4810
200 MLB	3600	2500	4580	3120	5280	3530	5720	3980
200 MLC	3600	2500	-	-	5280	3530	-	-
225 SMB	4140	2740	5230	3440	6030	3900	6530	4400
225 SMC	4140	2740	5230	3440	6030	3900	6530	4400
250 SMB	5020	3330	6380	4150	7440	4610	8050	5210
250 SMC	5020	3330	6380	4150	7440	4610	8050	5210
280 SMB	5950	4050	7380	5010	-	-	-	-
280 SMC	5950	4050	7380	5010	-	-	-	-

Ordering information

When placing an order, please state the following minimum data in the order, as in the example.

The product code of the motor is composed in accordance with the following example.

Type designation	M3AA 112 M
Pole number	4
Mounting arrangement (IM-code)	IM B3 (IM 1001)
Rated output	4 kW
Product code	112022-ADC
Variant codes if needed	

Motor size

A	B	C	D, E, F
M3AA	112 M	3GAA 112 022 -	ADCG2, 122, 043, etc.

1 2 3 4 5 6 7 8 9 10 11 12 13 14...

A Motor type
B Motor size
C Product code
D Code for mounting arrangement
E Voltage and frequency code
F Generation code followed by variant codes

Explanation of the product code

Positions 1 to 4
3GAA/3GVA =
Totally enclosed motor with Aluminum stator frame

Position 4
Type of rotor
A = Squirrel cage rotor

Positions 5 and 6
IEC size

06	= 63	**16**	= 160
07	= 71	**18**	= 180
08	= 80	**20**	= 200
09	= 90	**22**	= 225
10	= 100	**25**	= 250
11	= 112	**28**	= 280
13	= 132		

Position 7
Pole pairs
1 = 2 poles
2 = 4 poles

Positions 8 to 10
Running number

Position 11
- (dash)

Position 12
Mounting arrangement
A = Foot-mounted motor
B = Flange-mounted motor.
Large flange with clearance holes.
Flange motors come without CC-number in the rating plate due to American legislation.
H = Foot- and flange-mounted motor.
Large flange with clearance holes.
Must be ordered using variant code 009.

Position 13
Voltage and frequency: See tables below

Position 14
Version **A,B,C, CG2...** =
Generation code followed by variant codes

6

The bullets in the product code description:

Voltage and frequency code

Frame sizes	**S**
63-100	200-240 VD 50 Hz
	380-420 VY 50 Hz
	440-480 VY 60 Hz
	D
112-132	380-420 VD 50 Hz
	440-480 VD 60 Hz
	660-690 VY 50 Hz

Frame sizes	**D**
160-280	380 VD 50 Hz
	400 VD 50 Hz
	415 VD 50 Hz
	660 VY 50 Hz
	690 VY 50 Hz
	460 VD 60 Hz

Other voltages available on request.

Global Motors acc. to EFF1, EPAct, CSA, EEV, UR

Technical data

Totally enclosed squirrel cagethree phase motors, aluminum frame

Power Hp	Power kW	Motor type	Product code	Speed r/min	Efficiency acc. to IEC 100%	Efficiency acc. to IEC 75%	Power factor cos φ	Current I_N A	Current I_s/I_N	Torque Nm	Torque T_s/T_N	Torque T_{max}/T_N	Moment of inertia kgm²	Weight kg	Weight lbs	Sound pressure level Lp dB(A)
3000 r/min = 2-poles				**400 V 50 Hz**												
0.25	**0.18**	**M3VA 63 A**	3GVA 061 391-••	2820	73.7	70.6	0.64	0.56	4.2	0.62	3.5	3.1	0.00013	3.9	8.6	
0.35	**0.25**	**M3VA 63 B**	3GVA 061 392-••	2810	77.5	75.8	0.71	0.66	4.5	0.87	3.6	3.3	0.00016	4.4	9.7	
0.50	**0.37**	**M3VA 71 A**	3GVA 071 391-••	2840	77.1	76.5	0.72	1.00	5.5	1.25	3.8	3.9	0.00040	5.5	12	
0.75	**0.55**	**M3VA 71B**	3GVA 071 392-••	2830	79.2	78.2	0.76	1.35	5.7	1.86	3.6	3.7	0.00045	6.5	14	
1	**0.75**	**M3VA 80 A**	3GVA 081 731-••	2860	79.2	78.6	0.81	1.7	7.1	2.5	4.5	3.7	0.000720	9	20	
1.5	**1.1**	**M3VA 80 C**	3GVA 081 773-••	2860	82.5	82.7	0.88	2.20	8	3.7	4.6	3.8	0.001090	12	25	
2	**1.5**	**M3AA 90 L**	3GAA 091 312-••	2900	85.9	86.5	0.87	3.00	7.7	5.0	2.7	3.6	0.0024	16	35	
3	**2.2**	**M3AA 90 LB**	3GAA 091 313-••	2880	85.8	87.1	0.87	4.40	7.4	7.3	3.0	3.6	0.0027	18	40	
4	**3** [1]	**M3AA 100 LB**	3GAA 101 312-••	2920	87.6	87.5	0.86	5.90	10	9.9	3.9	4.9	0.0005	25	55	
5	**4**	**M3AA 112 M**	3GAA 111 022-••CG2	2860	87.7	89.4	0.93	7.1	7.5	13.4	2.6	3.4	0.012	33	139	63
7.5	**5.5**	**M3AA 132 SA**	3GAA 131 023-••CG2	2900	88.6	88.9	0.88	10.3	9.9	18.1	4	4.5	0.016	42	152	69
10	**7.5**	**M3AA 132 SB**	3GAA 131 024-••CG2	2915	90.9	91.3	0.9	13.3	11	24.6	5.1	5.2	0.022	56	152	69
15	**11**	**M3AA 160 MA**	3GAA 161 121-••CG2	2935	91.5	91.9	0.9	19.2	7.4	36	2.7	2.9	0.047	84	151.8	69
20	**15**	**M3AA 160 M**	3GAA 161 122-••CG2	2940	92.3	92.7	0.9	26	8	49	3	3.3	0.053	94	152	69
25	**18.5**	**M3AA 160 L**	3GAA 161 123-••CG2	2935	93.1	93.6	0.89	32.5	8.3	60	3.1	3.3	0.058	100	152	69
30	**22**	**M3AA 180 M**	3GAA 181 121-••CG2	2945	93.2	93.8	0.91	37.5	7.1	71	2.7	2.9	0.092	137	154	70
40	**30**	**M3AA 200 MLB**	3GAA 201 021-••CG2	2950	93	93.3	0.9	52	7.9	97	3	2.9	0.18	200	158.4	72
50	**37**	**M3AA 200 MLC**	3GAA 201 022-••CG2	2960	93.9	94.1	0.89	64	8.8	120	3.6	3.3	0.19	205	158.4	72
60	**45**	**M3AA 225 SMC**	3GAA 221 021-••CG2	2970	94.4	94.4	0.88	78	6.9	145	2.3	2.9	0.29	260	162.8	74
75	**55**	**M3AA 250 SMB**	3GAA 251 021-••CG2	2970	94.1	94.1	0.91	93	7.5	177	2.5	3	0.57	330	165	75
100	**75** [2]	**M3AA 250 SMC**	3GAA 251 022-••CG2	2965	94.8	95	0.93	124	7.7	242	2.3	2.8	0.59	345	165	75
100	**75**	**M3AA 280 SMC**	3GAA 281 021-••CG2	2965	94.8	95	0.93	124	7.7	242	2.3	2.8	0.6	390	165	75

EFF1 Efficiency classification is valid for motors from 1.1 kW to 90 kW.

[1] Efficiency class EFF2.
[2] High output designs are non-CENELEC harmonized.

6

Global Motors acc. to EFF1, EPAct, CSA, EEV, UR

Technical data

Totally enclosed squirrel cagethree phase motors, aluminum frame

Power Hp	Power kW	Motor type	Product code	Speed r/min	Efficiency acc. to IEC 100%	Efficiency acc. to IEC 75%	Power factor cos φ	Current I_N A	Current I_s/I_N	Torque Nm	Torque T_s/T_N	Torque T_{max}/T_N	Moment of inertia kgm²	Weight kg	Weight lbs	Sound pressure level Lp dB(A)
1500 r/min = 4-poles				**400 V 50 Hz**												
0.16	**0.12**	**M3VA 63 A**	3GVA 062 391-••	1400	63.7	58.4	0.59	0.46	3.1	0.82	2.6	2.6	0.00019	4	8.8	
0.25	**0.18**	**M3VA 63 B**	3GVA 062 392-••	1380	65.6	62.1	0.64	0.63	3.1	1.25	2.5	2.6	0.00026	4.5	9.9	
0.35	**0.25**	**M3VA 71 A**	3GVA 072 391-••	1410	70.4	69.1	0.71	0.74	4.3	1.71	2.7	2.9	0.00066	5.5	12	
0.50	**0.37**	**M3VA 71 B**	3GVA 072 392-••	1420	74.6	72.1	0.69	1.05	4.4	2.51	2.6	2.8	0.00089	6.5	14	
0.75	**0.55**	**M3VA 80 A**	3GVA 082 391-••	1390	75.3	73.1	0.76	1.40	4.6	3.75	2.6	2.9	0.001250	9.0	20	
1	**0.75**	**M3VA 80 C**	3GVA 082 733-••	1380	82.5	83.2	0.82	1.60	5.6	5.2	4	2.6	0.001940	11	24	
1.5	**1**	**M3AA 90 L**	3GAA 092 312-••	1420	83.9	84.3	0.80	2.40	6.1	7.4	2.9	3.4	0.0043	16	35	
2	**1.5**	**M3AA 100 LA**	3GAA 102 311-••	1440	85.6	85.5	0.82	3.20	6.9	10	2.8	3.4	0.0069	21	46	
3	**2.2**	**M3AA 100 LC**	3GAA 102 313-••	1450	86.8	86.6	0.77	4.80	8.5	14.5	4.0	4.6	0.009	25	55	
4	**3** [1]	**M3AA 100LB**	3GAA 102 342-••	1450	85.5	85.5	0.84	5.90	7.6	17.2	3.3	3.8	0.0082	25	55	
5	**4**	**M3AA 112 M**	3GAA 112 022-••CG2	1455	88.3	88.6	0.76	8.6	8.5	26.3	3.3	4.3	0.018	34	75	56
7.5	**5.5**	**M3AA 132 S**	3GAA 132 023-••CG2	1460	89.3	90.5	0.84	10.6	7	36.2	2.2	2.8	0.038	48	106	59
10	**7.5**	**M3AA 132 M**	3GAA 132 024-••CG2	1450	90.3	91	0.87	14	7.8	49	2.2	3.1	0.048	59	130	59
15	**11**	**M3AA 160 M**	3GAA 162 121-••CG2	1470	91.5	92.1	0.83	21	8.1	72	3.4	3.3	0.091	94	207	62
20	**15**	**M3AA 160 L**	3GAA 162 122-••CG2	1460	91.3	92.1	0.83	28.5	7.6	98	3.3	3.1	0.102	103	227	62
25	**18.5**	**M3AA 180 M**	3GAA 182 121-••CG2	1470	92.5	93.4	0.84	34	6.6	121	2.7	2.8	0.191	141	310	62
30	**22**	**M3AA 180 L**	3GAA 182 122-••CG2	1475	93.2	93.9	0.84	41	7.8	143	3.1	3.4	0.225	161	354	62
40	**30**	**M3AA 200 MLB**	3GAA 202 021-••CG2	1475	93.7	94.3	0.84	55	8	194	4	3.1	0.34	205	451	63
50	**37**	**M3AA 225 SMB**	3GAA 222 021-••CG2	1480	93.7	94	0.85	68	8.1	239	3.9	2.9	0.42	230	506	66
60	**45**	**M3AA 225 SMC**	3GAA 222 022-••CG2	1480	94.4	94.8	0.86	80	8	291	3.8	3.2	0.49	265	583	66
75	**55** [2]	**M3AA 225 SMD**	3GAA 222 023-••CG2	1480	94.5	94.8	0.86	98	8.5	355	4.3	3.8	0.56	290	638	66
75	**55**	**M3AA 250 SMB**	3GAA 252 021-••CG2	1480	94.5	94.9	0.87	96	7.4	356	3	3.1	0.88	335	737	67
100	**75** [2]	**M3AA 250 SMC**	3GAA 252 022-••CG2	1480	95.2	95.6	0.85	135	8.4	484	3.4	5.1	0.95	360	792	66
100	**75**	**M3AA 280 SMB**	3GAA 282 021-••CG2	1480	95.2	95.6	0.85	135	8.4	484	3.4	5.1	0.95	405	891	66

6

EFF1 Efficiency classification is valid for motors from 1.1 kW to 90 kW.

[1] Efficiency class EFF2.
[2] High output designs are non-CENELEC harmonized.

Global Motors acc. to EFF1, EPAct, CSA, EEV, UR

Technical data

Totally enclosed squirrel cagethree phase motors, aluminum frame

Power Hp	Power kW	Motor type	Product code	Speed r/min	NEMA Nom. Eff. % [1]	Efficiency acc. to IEC 100%	Efficiency acc. to IEC 75%	Power factor	Current I_N A	Current I_s/I_N	Torque Nm	Torque T_s/T_N	Torque T_{max}/T_N	Moment of inertia kgm²	Weight kg	Weight lbs
3600 r/min = 2-pole						**460 V 60 Hz**										
0.25	**0.18**	**M3VA 63 A**	3GVA 061 391-••	3400	[2]	70.1	67.5	0.60	0.5	4.6	0.5	4.0	4.0	0.00013	3.9	8.6
0.35	**0.25**	**M3VA 63 B**	3GVA 061 392-••	3400	[2]	76.4	75.3	0.70	0.6	5.4	0.7	3.9	3.9	0.00016	4.4	9.7
0.50	**0.37**	**M3VA 71 A**	3GVA 071 391-••	3450	[2]	76.5	74.5	0.70	0.9	6.6	1.0	4.2	4.4	0.00040	5.5	12
0.75	**0.55**	**M3VA 71B**	3GVA 071 392-••	3450	[2]	79.8	78.6	0.75	1.2	7.1	1.5	4.2	4.5	0.00045	6.5	14
1	**0.75**	**M3VA 80 A**	3GVA 081 731-••	3480	75.5	80.6	79.2	0.81	1.45	8.4	2.06	4.9	4.5	0.000722	9	20
1.5	**1.1**	**M3VA 80 C**	3GVA 081 773-••	3460	82.5	83.5	83.1	0.85	2.0	9.5	3.04	4.8	4.7	0.001093	11	24
2	**1.5**	**M3AA 90 L**	3GAA 091 312-••	3535	86.5	87.5	86.5	0.85	2.6	8.1	4.1	2.8	3.8	0.0024	16	35
3	**2.2**	**M3AA 90 LB**	3GAA 091 313-••	3530	87.5	87.9	87.5	0.85	3.7	7.5	6.0	3.2	3.7	0.0027	18	40
4	**3**	**M3AA 100 LB**	3GAA 101 312-••	3560	88.0	88.0	88.0	0.85	5.1	11.0	8.0	3.9	5.0	0.0005	25	55
5	**5**	**M3AA 112 M**	3GAA 111 022-••CG2	3475	87.5	88.3	0.93	6.1	9	11	2.6	4.1	0.012	33	145	66
7.5	**7.5**	**M3AA 132 SA**	3GAA 131 023-••CG2	3500	88.5	88.5	0.88	8.7	9.4	15	3.3	4	0.016	42	158	72
10	**10**	**M3AA 132 SB**	3GAA 131 024-••CG2	3465	89.5	89.5	0.92	11.5	14.5	20.7	4.5	6	0.022	56	158	72
15	**15**	**M3AA 160 MA**	3GAA 161 121-••CG2	3545	90.2	90.2	0.9	16.8	8.6	30	2.8	3.3	0.047	84	158.4	72
20	**20**	**M3AA 160 M**	3GAA 161 122-••CG2	3545	90.2	90.2	0.9	22.5	9.2	40	3.2	3.7	0.053	94	158	72
25	**25**	**M3AA 160 L**	3GAA 161 123-••CG2	3545	91	91	0.89	27.5	9.8	50	2.8	3.5	0.058	100	158	72
30	**30**	**M3AA 180 M**	3GAA 181 121-••CG2	3560	91	91	0.9	32.5	8.3	59	2.6	3	0.092	137	161	73
40	**40**	**M3AA 200 MLB**	3GAA 201 021-••CG2	3555	91.7	91.7	0.9	44.5	9	81	3.2	3.2	0.18	200	165	75
50	**50**	**M3AA 200 MLC**	3GAA 201 022-••CG2	3560	92.4	92.4	0.88	56	9.7	99	3.7	3.6	0.19	205	165	75
60	**60**	**M3AA 225 SMC**	3GAA 221 021-••CG2	3575	93	93	0.88	68	7.9	121	2.5	3.2	0.29	260	169.4	77
75	**75**	**M3AA 250 SMB**	3GAA 251 021-••CG2	3570	93	93	0.9	81	8.7	147	2.7	3.2	0.57	330	171.6	78
100	**100**	**M3AA 280 SMC**	3GAA 281 021-••CG2	3565	93.6	93.6	0.92	108	9.9	201	2.4	3.1	0.6	390	171.6	78
100	**100** [3]	**M3AA 250 SMC**	3GAA 251 022-••CG2	3565	93.6	93.6	0.92	108	9.9	201	2.4	3.1	0.59	345	171.6	78

Global motor fulfilling EFF1, CSA-EEV and EPAct certification requirements CC031A.

[1] NEMA Nominal efficiency acc. to IEEE112.
[2] EPAct classification is valid for motors from 1 HP to 200 HP.
[3] High output designs are non-CENELEC harmonized.

6

Global Motors acc. to EFF1, EPAct, CSA, EEV, UR

Technical data

Totally enclosed squirrel cagethree phase motors, aluminum frame

Power Hp	Power kW	Motor type	Product code	Speed r/min	NEMA Nom. Eff. % [1]	Efficiency acc. to IEC 100%	Efficiency acc. to IEC 75%	Power factor	Current I_N A	Current I_s/I_N	Torque Nm	Torque T_s/T_N	Torque T_{max}/T_N	Moment of inertia kgm²	Weight kg	Weight lbs
1800 r/min = 4-pole						**460 V 60 Hz**										
0.16	**0.12**	**M3VA 63 A**	3GVA 062 391-••	1680	[2]	58.8	54.5	0.55	0.5	2.8	0.7	2.6	2.7	0.00019	4	8.8
0.25	**0.18**	**M3VA 63 B**	3GVA 062 392-••	1680	[2]	62.8	59.5	0.57	0.6	2.9	1.0	2.5	2.6	0.00026	4.5	9.9
0.35	**0.25**	**M3VA 71 A**	3GVA 072 391-••	1700	[2]	66.7	63.9	0.68	0.7	4.3	1.4	3.1	3.1	0.00066	5.5	12
0.50	**0.37**	**M3VA 71 B**	3GVA 072 392-••	1700	[2]	70.6	68.3	0.69	0.9	4.5	2.1	3.2	3.2	0.00089	6.5	14
0.75	**0.55**	**M3VA 80 A**	3GVA 082 391-••	1700	[2]	73.3	71.6	0.74	1.3	5.1	3.1	3.0	3.0	0.001250	9.0	20
1	**0.75**	**M3VA 80 C**	3GVA 082 733-••	1730	82.5	82.5	82.1	0.78	1.5	6.6	4.14	4.1	3.1	0.001848	11	24
1.5	**1.1**	**M3AA 90 L**	3GAA 092 312-••	1750	84.0	85.5	84.0	0.78	2.1	7.1	6.1	3.0	3.8	0.0043	16	35
2	**1.5**	**M3AA 100 LA**	3GAA 102 311-••	1765	86.5	87.2	86.0	0.79	2.8	7.5	8.2	3.0	4.0	0.0069	21	46
3	**2.2**	**M3AA 100 LC**	3GAA 102 313-••	1770	87.5	87.5	87.5	0.75	4.2	9.0	11.9	4.1	4.8	0.009	25	55
4	**3**	**M3AA 100LB**	3GAA 102 342-••	1740	87.5	87.5	87.5	0.82	5.4	7.6	16.5	3.1	3.7	0.0082	25	55
5	**5**	**M3AA 112 M**	3GAA 112 022-••CG2	1775	87.5	87.5	0.8	7.1	10.4	21.8	3.9	4.6	0.018	34	75	59
7.5	**7.5**	**M3AA 132 S**	3GAA 132 023-••CG2	1760	89.5	89.5	0.83	9.3	8.9	30	2.7	3.5	0.038	48	106	62
10	**10**	**M3AA 132 M**	3GAA 132 024-••CG2	1765	89.5	89.5	0.85	12.4	9.7	41	3.5	3.6	0.048	59	130	62
15	**15**	**M3AA 160 M**	3GAA 162 121-••CG2	1775	91	91	0.81	18.4	8.9	59	3.5	3.7	0.091	94	207	65
20	**20**	**M3AA 160 L**	3GAA 162 122-••CG2	1770	91	91	0.83	24.5	8.8	81	3.5	3.6	0.102	103	227	65
25	**25**	**M3AA 180 M**	3GAA 182 121-••CG2	1775	92.4	92.4	0.84	29.5	7.7	100	3	3.1	0.191	141	310	65
30	**30**	**M3AA 180 L**	3GAA 182 122-••CG2	1780	92.4	92.4	0.83	35	9.1	118	3.4	3.8	0.225	161	354	66
40	**40**	**M3AA 200 MLB**	3GAA 202 021-••CG2	1780	93	93	0.83	48.5	9.2	161	4.1	3.4	0.34	205	451	66
50	**50**	**M3AA 225 SMB**	3GAA 222 021-••CG2	1785	93	93	0.84	59	9.1	198	3.9	3.3	0.42	230	506	69
60	**60**	**M3AA 225 SMC**	3GAA 222 022-••CG2	1780	93.6	93.6	0.86	69	9.1	241	3.9	3.5	0.49	265	583	69
75	**75** [3]	**M3AA 225 SMD**	3GAA 222 023-••CG2	1785	94.1	94.1	0.86	85	9.9	295	4.5	3.7	0.56	290	638	69
75	**75**	**M3AA 250 SMB**	3GAA 252 021-••CG2	1780	94.1	94.1	0.86	85	8.5	295	3.2	3.4	0.88	335	737	70
100	**100** [3]	**M3AA 250 SMC**	3GAA 252 022-••CG2	1785	94.5	94.5	0.84	117	9.8	402	3.2	3.4	0.95	360	792	70
100	**100**	**M3AA 280 SMB**	3GAA 282 021-••CG2	1785	94.5	94.5	0.84	117	9.8	402	3.2	3.4	0.95	405	891	70

6

Global motor fulfilling EFF1, CSA-EEV and EPAct certification requirements CC031A.

[1] NEMA Nominal efficiency acc. to IEEE112.
[2] EPAct classification is valid for motors from 1 HP to 200 HP.
[3] High output designs are non-CENELEC harmonized.

General purpose global motors - Variant codes

Code [1]	Variant	Motor size 63	71-80	90-100	112-132	160-180	200-250	280
	Balancing							
052	Vibration acc. to grade A (IEC 60034-14).	P	P	P	S	S	S	S
417	Vibration acc. to grade B (IEC 60034-14).	NA	NA	P	R	R	R	R
423	Balancing without key.	P	P	P	R	R	R	R
424	Full key balancing.	P	P	P	P	P	P	P
	Bearings and lubrication							
036	Transport lock for bearings.	NA	NA	NA	M	M	M	M
037	Roller bearing at D-end. Transport lock included.	NA	NA	NA	NA	M	M	M
039	Cold resistant grease. For ambient temperatures -40 - +100° C.	M	M	NA	P	P	P	P
040	Heat resistant grease. For bearing temperatures -40 - +160° C. Mandatory for ambient temperatures >50° C.	M	M	P	S	S	S	S
041	Bearings regreasable via grease nipples.	NA	NA	NA	M	M	S	S
042	Locked drive-end. Standard for sizes 90-132, flanged versions.	NA	M	S	M	S	S	S
043	SPM nipples.	NA	NA	P	P	P	P	P
057	2RS bearings at both ends. Grease for bearing temperatures -20 - +110° C.	M	M	P	M	M	M	M
058	Angular contact ball bearing at D-end, shaft force away from bearing. Transport lock included.	NA	NA	P	M	M	M	M
059	Angular contact ball bearing at N-end, shaft force towards bearing. Transport lock included.	NA	NA	P	M	M	M	M
188	63-series bearings.	NA	NA	P	M	S	S	S
796	Grease nipples JIS B 1575 PT 1/8 Type A				M	M	M	M
797	Stainless steel SPM Nipples				M	M	M	M
798	Stainless steel grease nipples				M	M	M	M
	Branch standard designs							
142	”Manilla” winding connection. (440 VD series, 220 VD parallel, 60Hz) Single speed motors only.			P	P	P	P	P
178	Stainless steel/acid proof bolts.	M	M	M	M	M	M	M
209	Non-standard voltage or frequency (special winding).			R	R	R	R	R
425	Corrosion protected stator and rotor core.	P	P	P	P	P	P	P
	Coupling							
035	Assembly of customer supplied coupling-half.			R	R	R	R	R
	Dimension drawing							
141	Binding dimension drawing	M	M	M	P	P	P	P
	Drain holes							
065	Plugged drain holes.	M	M	M	M	M	M	M
066	Modified drain hole position. IP 54 for sizes 63-100. Specify IM designation.	M	M	M	M	M	M	M
	Earthing bolt							
067	External earthing bolt. Earthing screw for connection of external protective earth.	M	M	M	M	M	M	M

[1] Certain variant codes cannot be used simultaneously.

S = Included as standard.
M = On modification of a stocked motor, or on new manufacture, the number per order may be limited.
P = New manufacture only.
R = On request.
NA = Not applicable.

6

Code [1]	Variant	Motor size 63	71-80	90-100	112-132	160-180	200-250	280
	Heating elements							
	Motor size / **Element capacity** 63-71 / 8 W 80-160 / 25 W 180-280 / 50 W							
450	Heating element 100-120 V.	M	M	NA	M	M	M	M
451	Heating element 200-240 V.	M	M	NA	M	M	M	M
	Mounting arrangements							
	NOTE: Multiple flange sizes available using two-piece flange system, see page 48.							
007	IM 3001 flange mounted, IEC flange, from IM 1001 (B5 from B3). Large flange with clearance holes.			NA	NA	NA	M	M
008	IM 2101 foot/flange mounted, IEC flange, from IM 1001 (B34 from B3). Small flange with tapped holes. Frame size 180 not available.	NA	M	M	M	R	NA	NA
009	IM 2001 foot/flange mounted, IEC flange, from IM 1001 (B35 from B3). Large flange with clearance holes.	M	M	M	M	M	M	M
	Painting							
114	Special paint colour, standard grade.	M	M	P	M	M	M	M
179	Special paint specification.	NA	NA	R	R	R	R	R
	Protection							
005	Protective roof, vertical motor, shaft down. Vertically mounted motors with shaft extension downwards. See also the Accessories section for further information.	M	M	M	M	M	M	M
072	Radial seal at D-end.			NA	M	M	M	M
158	Degree of protection IP65 or IP65X. Dust proof version.	P	P	NA	M	M	M	M
211	Weather protected, IP xx W	NA	NA	NA	P	P	P	P
403	Degree of protection IP 56. Water from waves which splash over must not enter in serious quantities.	P	P	NA	M	M	M	M
784	Gamma-seal at D-end.			NA	M	M	M	M
	Rating and instruction plates							
003	Individual serial number.	P	P	M	S	S	S	S
138	Mounting of additional identification plate, aluminium.	M	M	M	M	M	M	M
139	Additional indentification plate delivered loose.	M	M	M	M	M	M	M
163	Frequency converter rating plate. Rating data according to quotation.			M	M	M	M	M
	Shaft and rotor							
069	Two shaft extensions as per basic catalogue. Standard shaft material.	P	P	NA	P	P	P	P
070	One or two special shaft extensions, standard shaft material.	P	P	R	R	R	R	R
165	Shaft extension with open key-way.	P	P	R	P	P	P	P
	Standards and regulations							
010	Fulfilling CSA Safety Certificate.	S	S	S	S	S	S	S
011	Fulfilling CSA. Energy efficiency verification (010 included). For frame sizes 90-100 own product code, contact ABB.	NA	NA	NA	S	S	S	S
029	Fulfilling Underwriters Laboratory (UL) requirements.	S	S	S	S	S	S	S
408	Energy efficient design, according to IEEE, Std 112	NA	NA	R	S	S	S	S

[1] Certain variant codes cannot be used simultaneously.

S = Included as standard.
M = On modification of a stocked motor, or on new manufacture, the number per order may be limited.
P = New manufacture only.
R = On request.
NA = Not applicable.

Code [1]	Variant	Motor size 63	71-80	90-100	112-132	160-180	200-250	280
	Stator winding temperature sensors							
121	Bimetal detectors, break type (NCC), (3 in series), 130°C, in stator winding.	M	M	P	P	P	P	P
122	Bimetal detectors, break type (NCC), (3 in series), 150°C, in stator winding.	M	M	P	M	M	M	M
123	Bimetal detectors, break type (NCC), (3 in series), 170°C, in stator winding.	M	M	P	P	P	P	P
124	Bimetal detectors, break type (NCC), (3 in series), 140°C, in stator winding.	M	M	P	P	P	P	P
125	Bimetal detectors, break type (NCC), (2 x 3 in series), 150°C, in stator winding.	M	M	P	P	P	P	P
127	Bimetal detectors, break type (NCC), (3 in series, 130°C & 3 in series, 150°C), in stator winding.	M	M	P	P	P	P	P
321	Bimetal detectors, closing type (NO), (3 in parallel), 130°C, in stator winding.	NA	NA	P	R	R	R	R
322	Bimetal detectors, closing type (NO), (3 in parallel), 150°C, in stator winding.	NA	NA	P	R	R	R	R
323	Bimetal detectors, closing type (NO), (3 in parallel), 170°C, in stator winding.	NA	NA	P	R	R	R	R
325	Bimetal detectors, closing type (NO), (2x3 in parallel), 150°C, in stator winding.	NA	NA	P	R	R	R	R
327	Bimetal detectors, closing type (NO), (3 in parallel, 130°C, & 3 in parallel, 150°C), in stator winding.	NA	NA	P	R	R	R	R
435	PTC - thermistors, (3 in series), 130°C, 3 in stator winding.	M	M	R	P	P	P	P
436	PTC thermistors, 150°C, 3 in series. Motor sizes 160-180 as modification.	M	M	M	M	M	S	S
437	PTC - thermistors, (3 in series), 170°C, in stator winding.	M	M	R	P	P	P	P
439	PTC - thermistors, (2x3 in series), 150°C, in stator winding.	M	M	R	P	P	P	P
440	PTC - thermistors, (3 in series, 110 °C, & 3 in series, 130°C), in stator winding.	M	M	R	P	P	P	P
441	PTC - thermistors, (3 in series, 130 °C, & 3 in series, 150°C), in stator winding.	M	M	R	P	P	P	P
442	PTC - thermistors, (3 in series, 150 °C & 3 in series, 170°C), in stator winding.	M	M	R	P	P	P	P
445	PT100 (1 per phase) in stator winding. Measurement current max. 10 mA. Temperature: 0 10 20 50 100 150 °C. Resistance: 100 103.9 107.7 119.3 128.5 158 Ohm. Monitoring unit, more information from ABB.	NA	NA	NA	P	P	P	P
446	PT100 (2 per phase) in stator winding. Measurement current max. 10 mA. Temperature: 0 10 20 50 100 150 °C. Resistance: 100 103.9 107.7 119.3 128.5 158 Ohm. Monitoring unit, more information from ABB.	NA	NA	NA	NA	P	P	P
	Terminal box							
015	Motor supplied in D-connection. Single speed motors only.	M	M	M	M	M	M	M
017	Motor supplied in Y-connection. Single speed motors only.	M	M	M	M	M	M	M
021	Terminal box on left-hand side, seen from D-end.	NA	M	M	NA	NA	P	P
180	Terminal box on right-hand side, seen from D-end.	NA	M	M	NA	NA	P	P
230	Standard cable glands.	M	M	M	M	M	M	M
731	Two standard cable glands.	NA	M	M	M	M	M	M

[1] Certain variant codes cannot be used simultaneously.

S = Included as standard.
M = On modification of a stocked motor, or on new manufacture, the number per order may be limited.

P = New manufacture only.
R = On request.
NA = Not applicable

6

Code [1]	Variant	Motor size 63	71-80	90-100	112-132	160-180	200-250	280
	Testing							
140	Test confirmation.	M	M	R	P	P	P	P
145	Type test report from catalogue motor, 400 V 50 Hz.	M	M	R	P	P	P	P
146	Type test with report for motor from specific delivery batch.	P	P	R	P	P	P	P
147	Type test report with motor from specific delivery batch, customer witnessed.	P	P	R	P	P	P	P
148	Routine test report.	P	P	R	P	P	P	P
149	Test according to separate test specification.	NA	NA	R	R	R	R	R
221	Type test and multi-point load test with report for motor from specific delivery batch.	R	R	R	P	P	P	P
222	Torque/speed curve, type test and multi-point load test with report from specific delivery batch.	R	R	R	P	P	P	P
760	Vibration level test.	P	P	R	P	P	P	P
762	Noise level test.	P	P	R	P	P	P	P

[1] Certain variant codes cannot be used simultaneously.

S = Included as standard.
M = On modification of a stocked motor, or on new manufacture, the number per order may be limited.
P = New manufacture only.
R = On request.
NA = Not applicable.

6

Global motors

Sizes 63-280

Dimension drawings

Foot-mounted motor IM 1001 / B3

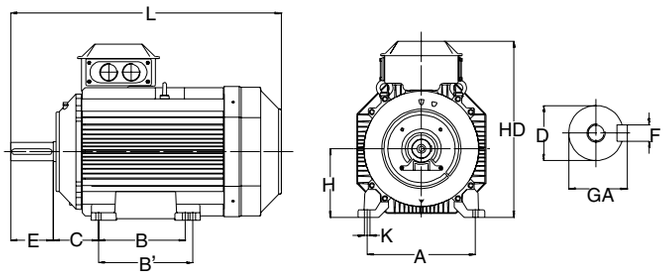

Foot-mounted motor IM 3001 / B5

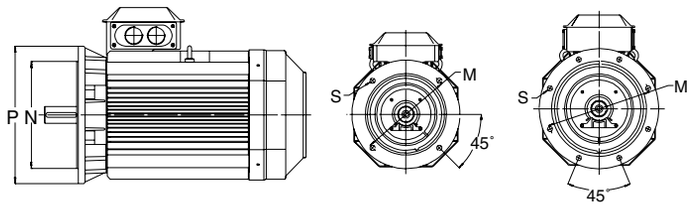

Motor size	IM 1001, IM B3 AND IM 3001, IM B5 D poles 2	D poles 4	GA poles 2	GA poles 4	F poles 2	F poles 4	E poles 2	E poles 4	L max poles 2	L max poles 4	IM 1001, IM B3 A	B	B'	C	H	HD	K	IM 3001, IM B5 M	N	P	S
63	11	11	12.5	12.5	4	4	23	23	205	205	100	80	–	40	63	171	7	115	95	140	10
71	14	14	16	16	5	5	30	30	238	238	112	90	–	45	70	176	7	130	110	160	10
80	19	19	21.5	21.5	6	6	40	40	265	265	125	100	–	50	80	190	10	165	130	200	12
90	24	24	27	27	8	8	50	50	320	320	140	125		56	90	212	10	165	130	200	12
100	28	28	31	31	8	8	60	60	358.5	358.5	160	140		63	100	236	12	215	180	250	15
112	28	28	31	31	8	8	60	60	388	388	190	140	–	70	112	258	12	215	180	250	14.5
132 S, SA	38	38	41	41	10	10	80	80	447	447	216	140	178	89	132	295.5	12	265	230	300	14.5
132 SB, M	38	38	41	41	10	10	80	80	481.5	481.5	216	140	178	89	132	295.5	12	265	230	300	14.5
160	42	42	45	45	12	12	110	110	602.5	602.5	254	210	254	108	160	370	15	300	250	350	19
180 M	48	48	51.5	51.5	14	14	110	110	680	680	279	241	279	121	180	405	15	300	250	350	19
180 L	48	48	51.5	51.5	14	14	110	110	700.5	700.5	279	241	279	121	180	405	15	300	250	350	19
200	55	55	59	59	16	16	110	110	774	774	318	267	305	133	200	533	18	350	300	400	19
225 SMB,SMC	55	60	59	64	16	18	110	140	836	866	356	286	311	149	225	578	18	400	350	450	19
225 SMD	55	60	59	64	16	18	110	140	861	891	356	286	311	149	225	578	18	400	350	450	19
250 SMB	60	65	64	69	18	18	140	140	875	875	406	311	349	168	250	626	22	500	450	550	19
250 SMC	60	65	64	69	18	18	140	140	900	900	406	311	349	168	250	626	22	500	450	550	19
280	65	75	69	79.5	18	20	140	140	900	900	457	368	419	190	280	656	24	500	450	550	19

IM 3601, IM B14

Motor size	M	N	P	S
63	75	60	90	M5
71	85	70	105	M6
80	100	80	120	M6
90	115	95	140	M8
100	130	110	160	M8
112	130	130	160	M8
132	165	165	200	M10

Tolerances:

A, B	± 0,8
D, DA	ISO k6 < Ø 50mm
	ISO m6 > Ø 50mm
F, FA	ISO h9
H	-0,5
N	ISO j6
C, CA	± 0.8

Above table gives the main dimensions in mm.

For detailed drawings please see our web-pages 'www.abb.com/motors&drives' or contact us.

6

Rating plates

The applicable Global motor standards provide the following minimum requirements for markings to be shown on the rating plate.

– NEMA Nominal efficiency
– ”EPAct CC031A” when applicable
– Output in kW and hp
– Ambient temperature
– Serial number
– Logos according to certifications

ABB Motors

3~Motor M3AA 090 L-2 | CL. A | IP | IEC 60034-1

3GAA091312-ASEG2

N°. | Amb. 40°C | Encl. TEFC

V	Hz	r/min	hp	A	Cos φ
440-480 Y	60	3500	2	2,6	0,86
255-275 D	60	3500	2	4,5	0,86

NEMA Nom. Eff 86,5% CC031A

6205-2Z/C3 6204-2Z/C3 15 kg

ABB

3~Motor M3AA 112 M 2 | Cl. F | IP 55 | IEC 60034-1

3GAA 111 022 - ADCG2

No. 0412345610001 | Amb 40°C | Encl. TEFC

V	Hz	r/min	kW/hp	A	cos φ
380-420 Δ	50	2860	4 / 5	7,6	0,93
660-690 Y	50	2860	4 / 5	4	0,93
460 Δ	60	3475	4 / 5	6,1	0,93

EPAct: CC031A Nema Nom.Eff. 87,5

6206-2Z/C3 6206-2Z/C3 33 Kg

ABB, LV Motors Sweden 3GZV 194 001-39

ABB

3~Motor M3AA 250 SMB 4

No. 0442865610001

Ins.cl. F | IP 55

V	Hz	kW	r/min	A	cosφ
380 Δ	50	55	1480	101	0,87
400 Δ	50	55	1480	97	0,87
415 Δ	50	55	1480	94	0,86
660 Y	50	55	1480	58	0,87
690 Y	50	55	1480	56	0,86
460 Δ	60	55	1785	85	0,86

Prod.code 3GAA 252 021-ADCG2

Epact: CC031A. Nema Nom Eff 94,1

6315/C3 6213/C3 335 kg

ABB, LV Motors Sweden
IEC 60034-1 3GZV 194 001-40

Flange mounted motors will be delivered as global motors however the CC number cannot be printed on the rating plate.

ABB Motors

Motor 3 ~ CL. F IP55 IEC 34-1

M2VA80B-4 3GVA082002-ASA

43/2002	Hz	r/min	kW	A	cos φ
V 380-420 Y 220-240 Δ	50	1410	0.75	2.0/3.5	0.74
V 440-480 Y 250-280 Δ	60	1690	0.90	1.9/3.3	0.77

ABB

3~Motor M3AA 160 MA 2

Amb 40°C | Encl. TEFC

No. 0412345610001

Ins.cl. F | IP

V	Hz	kW	hp	r/min	A	cosφ
690 Y	50	11	15	2935	10,8	0,90
400 Δ	50	11	15	2935	19,2	0,90
660 Y	50	11	15	2930	11,5	0,91
380 Δ	50	11	15	2930	20,0	0,91
415 Δ	50	11	15	2940	18,7	0,89
400 Δ	60	11	15	3545	16,8	0,90

Prod.code 3GAA 161 121-ADCG2

EPAct: CC031A NEMA Nom.Eff. 90.2

6309-2Z/C3 6209-2Z/C3 84 kg

ABB, LV Motors Sweden
IEC 60034-1 3GZV 194 001-40

ABB

3~Motor M3AA 160 MA 2

Amb 40°C | Encl. TEFC

No. 0412345610002

Ins.cl. F | IP

V	Hz	kW	hp	r/min	A	cosφ
690 Y	50	11	15	2935	10,8	0,90
400 Δ	50	11	15	2935	19,2	0,90
660 Y	50	11	15	2930	11,5	0,91
380 Δ	50	11	15	2930	20,0	0,91
415 Δ	50	11	15	2940	18,7	0,89
400 Δ	60	11	15	3545	16,8	0,90

Prod.code 3GAA 161 121-BDCG2

NEMA Nom.Eff. 90.2

6309-2Z/C3 6209-2Z/C3 84 kg

ABB, LV Motors Sweden
IEC 60034-1 3GZV 194 001-40

It’s the details that make the difference

■ Designed, certified and labeled to meet the safety requirements according to CE, UL/UR and CSA, and the efficiency requirements according to CE, EFF1, EPAct and CSA/EEV.

■ Suitable for variable frequency drive applications.

■ Terminal box with 6 lead terminal board, the winding can be connected in either D or Y configuration. The terminal box has plenty of space and is designed for easy and secure installation.

■ Degree of protection / Enclosure: IP 55 / Totally enclosed (TEFC) WaterProof Motor

- Protected against Dust / Limited ingress permitted (no harmful deposit)
- Protected against low pressure jets of water from all directions / Limited ingress permitted.

Other protections available on request.

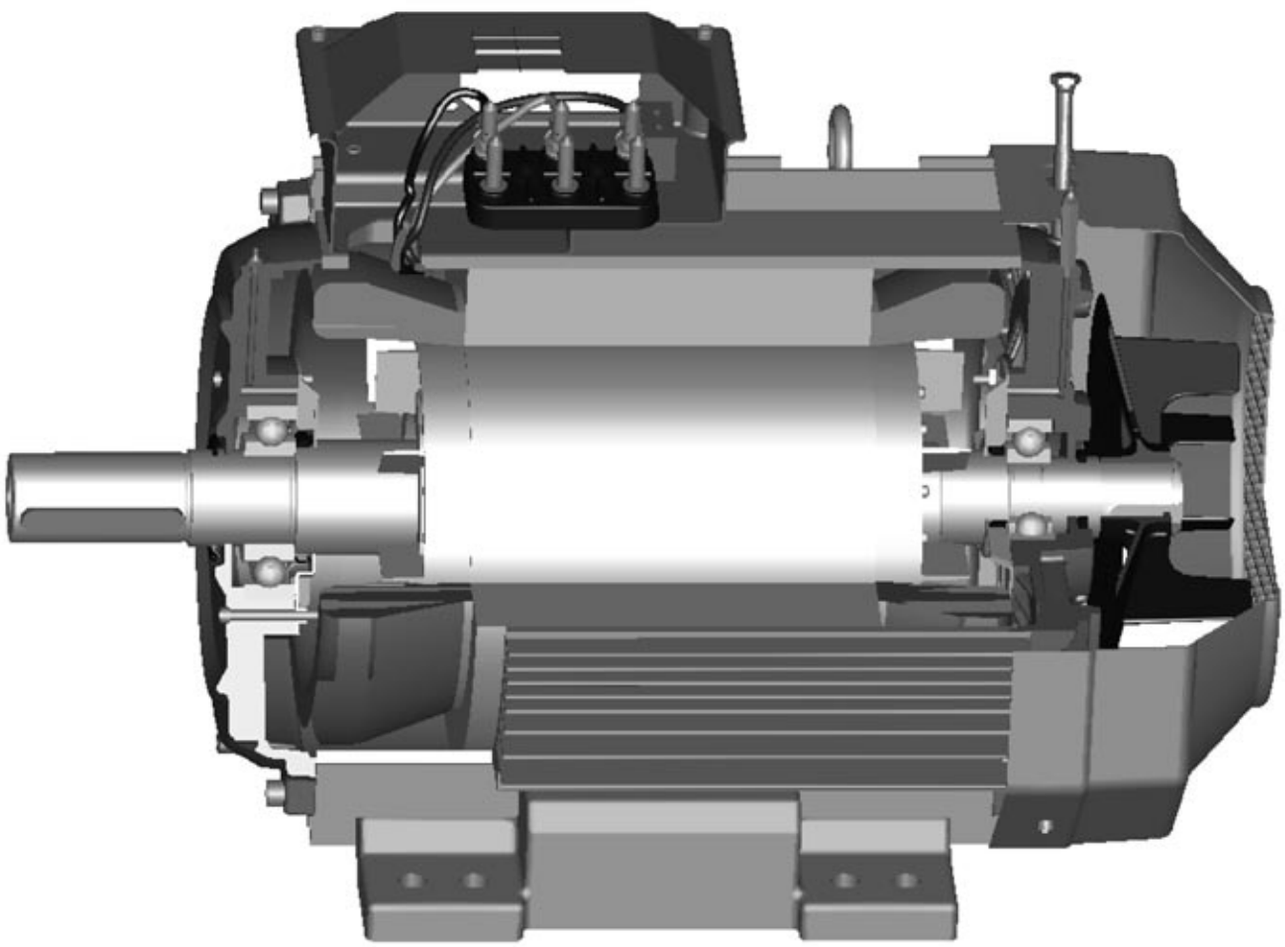

■ The frame is made of corrosion resistant die-cast aluminum with low copper content. Together with a surface treatment and final powder painting with Epoxy/Polyester powder, it gives a very high corrosion protection suitable for industrial applications, indoors and outdoors.

■ Reliable grease-lubricated ball bearings with C3 clearance as standard, designed for low running temperature and long service life.

■ Made by ABB according to the highest quality standards.

General purpose global motors in brief, basic design

Motor size		63	71	80	90	100	112	132
Stator	Material Paint colour shade Paint	Diecast aluminum alloy. Munsell blue 8B 4.5/3.25 / NCS 4822-B05G / RAL 5014 Epoxy polyester powder paint, ≥ 30 µm.			Polyester powder paint, ≥ 30 µm.		Polyester powder paint, ≥ 50 µm.	
Feet	Material	Aluminum alloy, loose feet in sizes 71-100, feet integrated with stator in size 63.					Aluminum alloy, integrated with stator.	
Bearing end shields	Material Paint colour shade Paint	Diecast aluminum alloy. Munsell blue 8B 4.5/3.25 / NCS 4822-B05G / RAL 5014 Epoxy polyester powder paint, ≥ 30 µm.			Polyester powder paint, ≥ 30 µm.		Polyester powder paint, ≥ 50 µm.	
Bearings	D-end N-end	6202-2Z/C3 6201-2Z/C3	6203-2Z/C3 6202-2Z/C3	6204-2Z/C3 6203-2Z/C3	6205-2Z/C3 6204-2Z/C3	6306-2Z/C3 6205-2Z/C3	6206-2Z/C3 6205-2Z/C3	6208-2Z/C3 6206-2Z/C3
Axially-locked bearings	Inner bearing cover	Spring washer at N-end.			D-end			
		112-132: Foot-mounted - a spring washer at N-end presses the rotor against D-end. Flange-mounted - inner bearing cover and spring-washer at N-end.						
Bearing seals	D-end N-end	V-ring. Labyrinth seal.						
Lubrication		Permanent grease lubrication. Grease for bearing temperatures -30 to +110°C.					Grease for bearing temperatures -40 to +160°C.	
Terminal box	Material Surface treatment Screws	Die-cast aluminum alloy. Similar to stator. Steel 5G. Chromated.						
Connections	Knock-out openings	1 x M16 x Pg11 2 x M20 x Pg16			4 x M25		2 x (M25 + M20)	
	Terminal box Screws Max Cu-area, mm²	Screw terminal, 6 terminals. 2,5	4		6		Cable lugs, 6 terminals. M5 10	
Fan	Material	Polypropylene. Reinforced with 20% glass fibre.						
Fan cover	Material	Steel.					Polypropylene.	
Stator winding	Material Impregnation Insulation class Winding protection	Copper Polyester vanish. Tropicalised. Insulation class F. Temperature rise class B, unless otherwise stated. Optional.						
Rotor winding	Material	Die-cast aluminum.						
Balancing method		Half key balancing.						
Key ways		Closed key way						
Heating elements		25 W						
Drain holes		Drain holes with closable plastic plugs. Open on delivery.						
Enclosure		IP 55						
Cooling method		IC 411						

Motor size		160	180	200	225	250	280
Stator	Material	Die-cast aluminum alloy.		Extruded aluminum alloy.			
		Munsell blue 8B 4.5/3.25 / NCS 4822-B05G / RAL 5014 Polyester powder paint, ≥ 50 µm.					
Feet	Material	Aluminum alloy, integrated with stator.		Aluminum alloy, bolted to the stator. Size 250, 2p cast iron.			Cast iron
Bearing end shields	Material	Die-cast aluminum alloy.	Flanged bearing end shields of cast iron, other die-cast aluminum alloy				Cast iron
		Munsell blue 8B 4.5/3.25 / NCS 4822-B05G / RAL 5014 Polyester powder paint, ≥ 50 µm.					
Bearings Single-speed motors	D-end N-end	6309-2Z/C3 6209-2Z/C3 [1] 6315/C3 for 2-pole motor	6310-2Z/C3 6209-2Z/C3	6312/C3 6210/C3	6313/C3 6212/C3	6315/C3 6213/C3	6316/C3 [1] 6213/C3
Axially-locked bearings	Inner bearing cover	D-end					
Bearing seals	D-end N-end	V-ring. Labyrinth seal.		Outer and inner V-rings. Outer and inner V-rings.			
Lubrication		Permanent grease lubrication. Grease for bearing temperatures -40 to +160°C.		Regreasable bearings. Grease for bearing temperatures -40 to 150°C.			
Terminal box	Material	Die-cast aluminum alloy. Base integrated with stator.		Deep-drawn steel sheet, bolted to stator.			
	Surface treatment	Similar to stator.		Phosphated. Polyester paint.			
	Screws	Steel 5G. Galvanised.					
Connections	Knock-out openings	2 x (2 x M40 + M16)					
	Flange-openings			2 x FL 13.2 x M40 2 x FL 21.2 x M63 voltage code S			2 x FL21, 2 x M63,1 x M16
		Cable lugs, 6 terminals.					
	Screws	M6		M10			
	Max Cu-area, mm²	35		70			
Fan	Material	Polypropylene. Reinforced with 20% glass fibre.					
Fan cover	Material	Steel sheet. Phosphated. Polyester paint.					
Stator winding	Material	Copper					
	Impregnation	Polyester vanish. Tropicalised.					
	Insulation class	Insulation class F. Temperature rise class B, unless otherwise stated.					
	Winding protection	Optional.		PTC-thermistors, 150°C			
Rotor winding	Material	Die-cast aluminum.					
Balancing method		Half key balancing.					
Key way		Closed key way					
Heating elements		25 W 50 W					
Drain holes		Drain holes with closable plastic plugs. Open on delivery.					
Enclosure		IP 55					
Cooling method		IC 411					

6

6

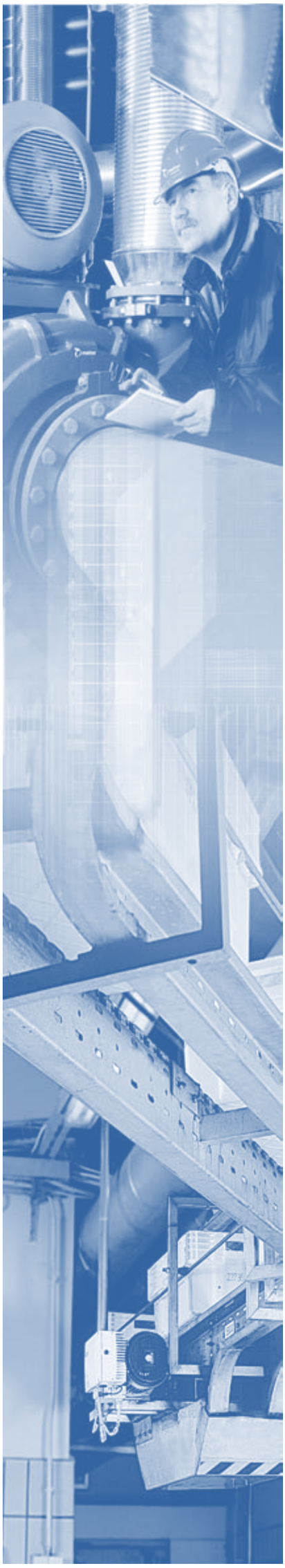

General Purpose Brake Motors

Totally enclosed squirrel cage three phase low voltage motors, Sizes 63 - 180, 0.055 to 22 kW

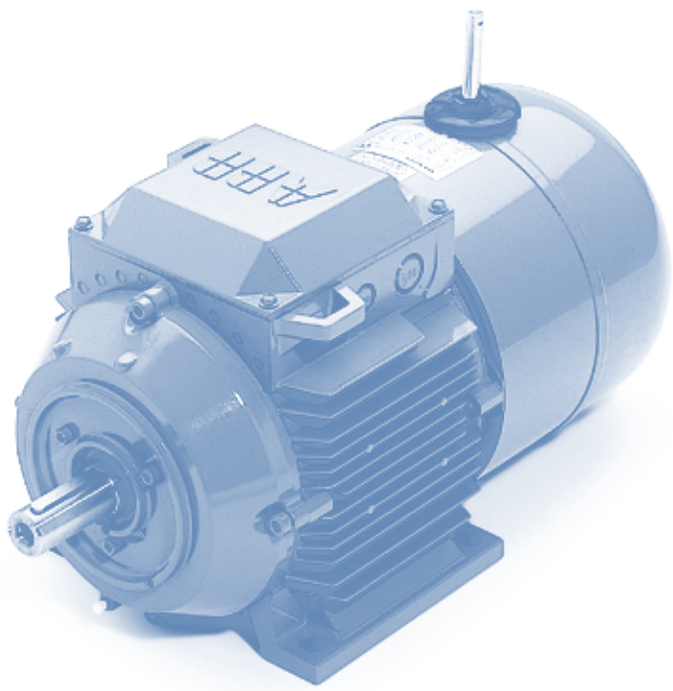

www.abb.com/motor&drives
> Motors
> Low voltage motors
> General purpose motors

7

Mechanical design.....194
Ordering information.....201
Technical data.....202
Variant codes 214
Rating plates.....214
Dimension drawings 215
Brake motors in brief 217

Mechanical design

Degrees of protection

The degrees of protection, as per IEC standards 60034-5, are: terminal box and electrical components of the brake – IP 55; other motor parts – IP 55.

Mechanical components of the brake – IP 23 S.

Mechanical parts of the brake, protected with a rubber ring and V-ring – IP 55 (optional: variant code 213).

Mounting arrangements of brake motors

The design of the brake motor enables it to operate in any mounting position. Nevertheless, the position of the drain holes should be taken into account.

Vertically mounted motors with the shaft end downwards, intended for outdoor operation, should be provided with a protective roof to avoid water ingress and the possibility of ice forming on the brake.

Operation

ABB's brake motor is a standard motor modified for braking duties, i.e. a three phase induction motor with standard dimensions and output rating.

The electro-magnetic disc brake is powered, by either DC or three phase AC current, from a rectifier located in the motor terminal box.

When the brake coil is de-energised, the brake is actuated by spring pressure.

The axial movement of the brake disc performs a dual braking action against the moving electromagnet and the motor shield, without pressure or impact being transmitted to the bearings.

The brake linings withstand high temperatures, have great wear resistance and give long life. Because of the very low wear of the braking disc, the brakes of the ABB motor usually require only one-third of the maintenance required by other common brake types in the market.

Lubrication and bearings

The bearings incorporate two Z-type non-friction sealing plates. The amount of grease is sufficient for the life of the bearing.

The motors are fitted with the bearings listed in the table.

Motor size		D-end	N-end
M3VRF/S	**63 A, B, BB**	6202-2Z/C3	6202-2Z/C3
	63 MA, MB	6201-2Z	6201-2Z
	71	6203-2Z/C3	6203-2Z/C3
	80	6204-2Z/C3	6204-2Z/C3
M3ARF/S	**90**	6205-2Z/C3	6205-2Z/C3
	100	6306-2Z/C3	6206-2Z/C3
	112	6206-2Z/C3	6206-2Z/C3
	132	6208-2Z/C3	6208-2Z/C3
	160	6309-2Z/C3	6209-2Z/C3
	180	6310-2Z/C3	6209-2Z/C3

Brake design

General

Electromagnetic disc brakes work by the action of a set of springs and are released when applying voltage to the brake coil.

This means that the motor will brake automatically in case of any voltage failure,as a significant safety feature. The brake is always functional, irrespective of the mounting position of the brake motor. The external dimensions for both the DC and the three phase AC brake are identical.

Detailed view

1 Rectifier (DC brake only)
2 Motor N-end shield
3 Screw
4 Brake disc
5 Dust protection (optional)
6 Armature
7 Hand release
8 Hand release bellows
9 Air gap regulation screw
10 Magnet
11 Fan cover
12 Fan
13 Torque regulation screw

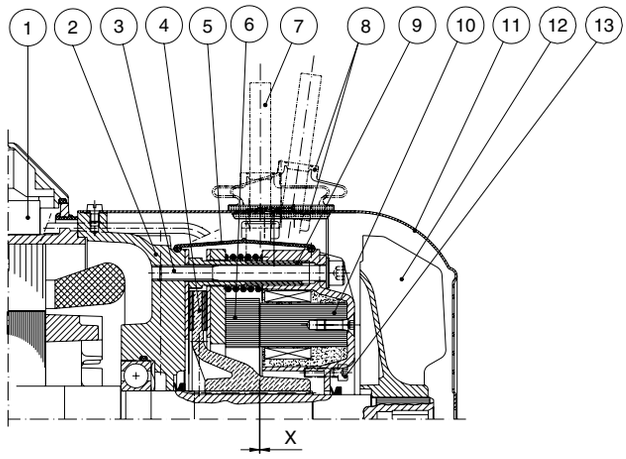

Brake disc

The brake lining is made from asbestos-free material. It is highly resistant to wear and has excellent thermal conductivity, thus giving consistent performance even at high temperatures.

The brake disc withstands a large number of braking operations and is insensitive to dust and moisture.

The core of the brake disc is grooved and made of special polyamide that absorbs impacts, enabling it to work with high vibration applications.

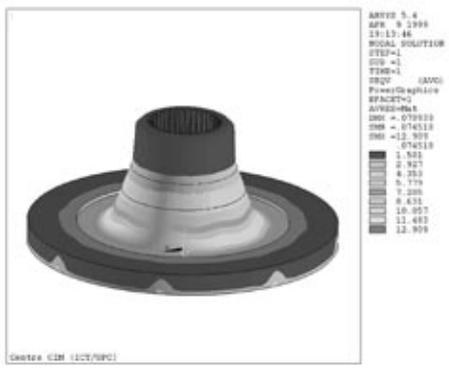

Readjusting the air gap

The brakes are supplied with the air gap adjusted to its nominal value.

The air gap has to be readjusted to its nominal value when the wear of the lining reaches the readjustment value (Xn) stated in table 1.

For this operation, work on the bushings (9) after releasing the bolts (3).

Tighten up the bushings in the magnet support (10) as required to reach the rated air gap value stated in table 1.

Tighten the bolts (3) to the specific torque, C (see table 1).

At the end of the operation, check that the air gap complies with the specified value and is uniform across the whole surface.

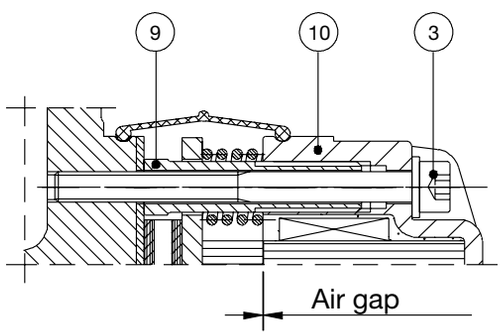

7

Replacing the brake disc

The brake disc must be replaced when reaching the minimum permissible lining thickness stated in Table 1.

Rectifier

The rectifier is a device for DC brake applications. It is highly resistant to temperature as well as to voltage peaks, and it includes an additional protection of the auxiliary contact of contactor. Its compact design enables it to be placed in the motor terminal box.

Connection for DC brake

The brake is fed via a rectifier. The voltage stated on the brake rating plate is that of the brake coil on the DC side of the rectifier.

The coil can operate reliably between of 90% and 110% of the rated voltage. For voltages outside these limits, please consult ABB.

Standard connection (t'21~)

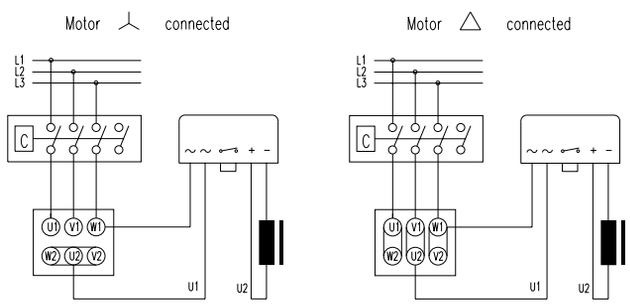

Reconnection (t21~)

When it is necessary to reduce the braking time, the connections should be modified according to the following diagram. The breaking of the circuit on the AC side is controlled by using an auxiliary contact of the contactor.

Reconnection (t21=)

To obtain instant braking, please see table 2 (t21=), use the following diagram.

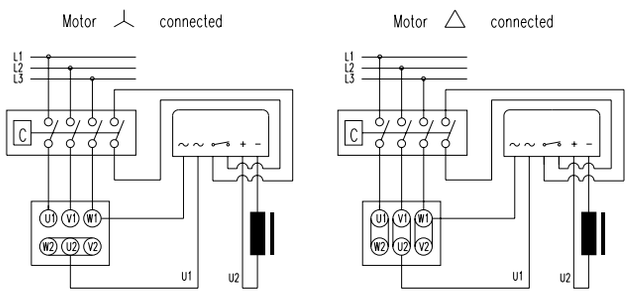

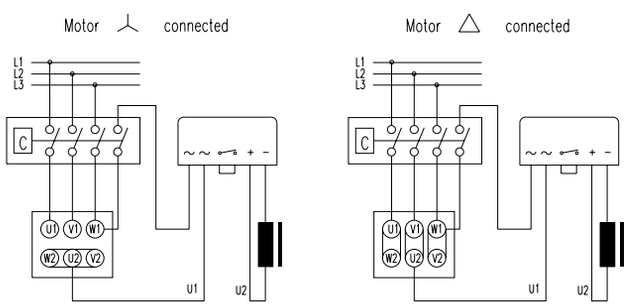

Connection of AC brake

The coil should only be used between 90% - 110% of its rated voltage.

Standard connection (t21)

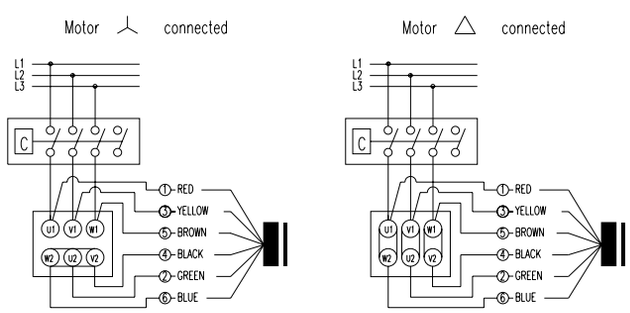

Reconnection (t21f)

To obtain instant braking, the coil must be fed separately from the motor terminals.

Remark:
Regardless of whether a DC or AC brake is used, the brake is usually connected to the motor terminals of single-speed motors. It can, however, also be delivered with a separate brake supply (variant code 086). In case of two-speed motors, the brake is always connected separately.

Hand release

The device is a lever used to override the action of the brake springs for as long as it is applied.

Hand release is included as standard, except for frame size 63, where it is available as option, see variant code 088.

When installing the release lever, please proceed as follows:

Remove the rubber protection, if fitted. Insert the screw (1) with its washer, position the spring (2) and washer (3) and tighten the nut (4) firmly. Fit the other washer and the square-head nut (5); adjust the position of the nut in relation to the moving magnet (Y value) with the central screw (1). When the required value is reached, tighten the inner nut (4) while holding nut (5) fixed.

Important: The use of the release lever necessitates periodic checking of the Y value and the air gap. The air gap should never exceed the maximum values stated in brake data table 1. Failure to check could result in malfunction due to mechanical locking of the armature.

Size	Y
FM 075.5	1
FM 088.6	1
FM 100.6	1
FM 120.6	1
FM 140.6	1.5
FM 155.6	1.5
FM 170.6	1.5
FM 206.6	1.5

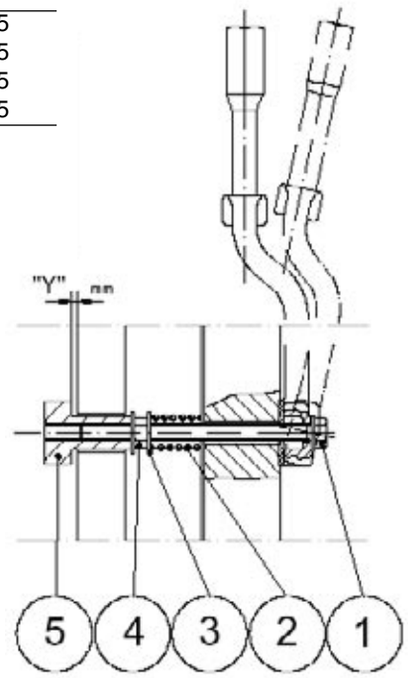

Torque adjustment

In brake motors from frame size 71 up to 180, the braking torque can be adjusted from 100% up to 55% of the nominal torque as standard.

Instructions for how to regulate torque are delivered with the brake motor. These instructions describe how to loosen the torque regulation screw (13), as well as the relation between dimension A and torque.

The braking torque is also adjustable as standard for frame sizes 63 MA and MB, having a torque range from 100% down to 10% of the nominal torque.

Reduced braking torque, from 60% up to 33%, is available by using variant code 087 (applies for frame sizes 71-180).

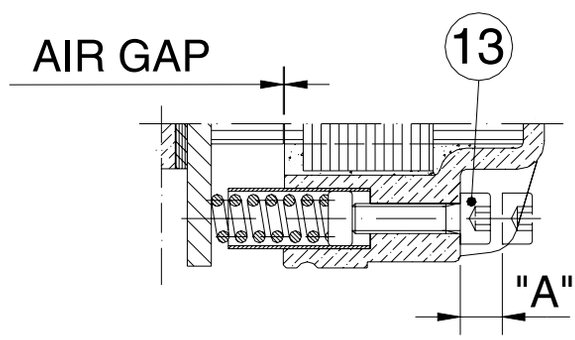

7

Brake operating times

The operating times stated in brake data table 2 are valid for the nominal air gap and warmed-up brake coil.

t_1 = Brake release time.

t_{21} = Braking time.

U_2 = Rated voltage.

T_B = Nominal braking torque.

Brake release time = the time from when voltage is applied to the brake coil up to the ceasing of braking action.

Braking time = the time from when the current is switched off up to the starting of braking action.

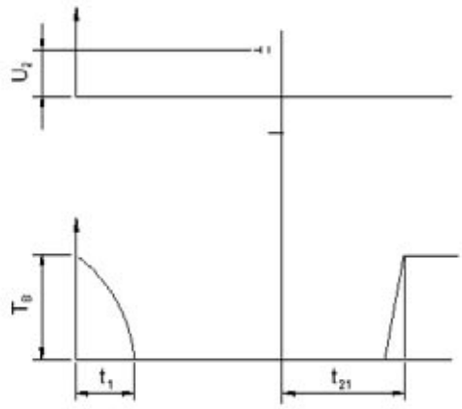

Special brakes (with DC brake)

Two-speed motors with one or two windings, motors with 9 or 12 terminals, and motors that have to be started with star-delta connection, with brake coil for DC, are supplied with the rectifier fitted in the motor terminal box, without the two wires that normally connect it to the motor terminal. The AC supply to the rectifier is independent to the motor supply and should be fed by the main contactor.

The standard brake coil connection voltages for 50 and 60 Hz will be those stated in the following table, unless stated otherwise in the order:

[1] H.W. = Half-wave rectifier, F.W. = Full-wave rectifier
[2] Special coil on request
[3] Available using variant code 285

Rectifier input voltage (V_{AC})	Rectifier type [1]	D.C. coil brake voltage (V)
110	F.W.	102 [2]
220	F.W.	205
230	F.W.	205
240	F.W.	205
250	F.W.	223 [2]
254	F.W.	223 [2]
380	H.W.	178
400	H.W	178
415	H.W	178
420	H.W.	178
440	H.W.	205
500	H.W.	223 [2]
24 V_{DC}	None	24 [3]

7

Brake data tables

Table 1.

Brake motor size		M3VRF 63M_	M3VRS 63M_	63 A/B	71	80	90	100	112	132	160/180 2 p	160/180 4-8 p
Brake type		K01	AC1	075.5	088.6	100.6	120.6	140.6	155.6	170.6	206.6	
Rated torque [1]	T_{Bnom} (Nm)	4.5	4.5	7.5	10	24	35	44	86	130	200	230
Delivered torque [2]	T_{Bdel} (Nm)	4	4	4	8	21	30	38	72	120	130	200
Nominal air gap	X (mm)	0.2	0.2	0.2	0.2	0.25	0.35	0.4	0.4	0.4	0.4	
Minimum permissible brake disc thickness	(mm)	3	3	3.5	3.5	5	5.5	6	6	7.5	8.5	
Recommended air gap readjustment	X_n (mm)	0.7	0.7	0.5	0.5	0.6	0.7	0.8	0.8	0.8	0.9	
Thickness of new brake disc	E_m (mm)	7	7	5.5	6	7.5	8.5	9.5	9.5	11	13	
Tightening torque: bolt	C_s (Nm)	6	6	6	6	12	12	30	30	30	50	
Input coil:												
- AC brake motor	(VA)	–	40	60	110	160	250	500	700	990	2000	
- DC brake motor	(W)	15	–	30	32	45	72	91	100	120	170	
Friction work per operation	WR_{max} (J)	$1x10^3$	$1x10^3$	$1x10^3$	$1.5x10^3$	$2x10^3$	$3.5x10^3$	$6.6x10^3$	$8x10^3$	$1.1x10^4$	$2x10^4$	
Friction work	PR_{max} (J/h)	$3x10^5$	$3x10^5$	$3x10^5$	$3.5x10^5$	$4.5x10^5$	$7x10^5$	$9x10^5$	$9.5x10^5$	$1x10^6$	$1.2x10^6$	
Operation for thickness wear of 0.1 mm	$WR_{0.1}$ (J)	$7x10^6$	$7x10^6$	$7x10^6$	$10x10^6$	$15x10^6$	$17x10^6$	$31x10^6$	$31.5x10^6$	$48x10^6$	$80x10^6$	
Moment of inertia	J (kgm^2)	$1.5x10^{-5}$	$1.5x10^{-5}$	$1.5x10^{-5}$	$3.7x10^{-5}$	$7.5x10^{-5}$	$2x10^{-4}$	$3.7x10^{-4}$	$6.2x10^{-4}$	$10.4x10^{-4}$	$26.4x10^{-4}$	
Weight	(kg)	1.2	1.2	0.8	1	1.6	2.7	4	5.2	9	16.2	

[1] Braking torque after performing 10.000-15.000 operations.

[2] Delivered torque : Torque value marked on rating plate corresponding to the braking torque when the brake motor leaves the ABB factory. Tolerance of +/-10% of this value is accepted. Ambient conditions, temperature on friction surfaces, brake motor positioning and transport applied on the product can affect this value.

In general, all the variables mentioned above can affect the braking torque values, so if an accurate value is needed, ABB recommends it is measured in the real application. This allows adjustment to the required value by using the torque regulation facility.

Table 2.

Braking (t_{21}) and release (t_1) times

Brake motor sizes		M3VRF 63 M_	M3VRS 63 M_	63 A/B	71	80	90	100	112	132	160/180
Brake type		K01	AC1	075.5	088.6	100.6	120.6	140.6	155.6	170.6	206.6
AC brake coil											
- release time	t1 (ms)	–	10	5	6.6	5	5.1	5.5	5	5	5.5
- standard braking time	t21 (ms)	–	25	25	25	30	40	50	50	65	105
- fast braking time	t21f (ms)	–	10	10	10	10	10	10	10	10	10
DC brake coil											
- release time	t1 (ms)	45	–	20	20	25	35	40	50	60	100
- std connection time	t'21~(ms)	–	–	150	170	210	330	420	720	850	930
- reconnection time	t21~ (ms)	–	–	30	35	45	70	90	155	190	150
- fast reconnection time	t21= (ms)	15	–	10	10	15	20	35	45	55	85

When fast braking in AC brake is used, the contactor that is operating the coil of the brake has to be over dimensioned taking in consideration a high inductive load.

Calculations

Maximum number of connections per hour

The connection frequency that may be achieved with the motors is limited by the temperature rise that they undergo both in the coil and in the rotor. The brakes are designed so that they may withstand the kinds of duty for which these motors are intended.

The maximum number of connections per hour depends on:

– the power P_2 required after reaching the rated speed, i.e. the relative load P with regard to the rated power P_n.

$$P = \frac{P_2}{P_n} \times 100\ \%$$

– the total inertia J in kgm^2 of the mass to be accelerated (inertia of the rotor J_m as per catalogue, plus the additional inertia J_b of the driven machine) in relation to the motor shaft, that is, J_b multiplied by the square of the coefficient of the load speed divided by the motor speed.

$$J = J_m + J_b \times \left[\left[\frac{n_b}{n_m} \right]^2 \right]$$

– the relative duration factor for service S4.

$$S4 = \frac{\text{connection time}}{\text{connection time + downtime}} \times 100 \text{ in } \%$$

For calculations of the maximum number of connections/hour, please consult ABB.

Required data:
– Type of brake motor
– Load inertia reduced at motor shaft
– Required power P2
– Type of service

Permitted friction work per operation

Friction work per operation must not exceed the WR_{max} values stated in brake data table 1.

$$WR = \frac{1}{2} \times J \left[\frac{\pi \times n_m}{30} \right]^2 \text{ in joules}$$

Friction work per hour

The friction work can be calculated if the number of operations per hour is known.

This value must be equal to or less than the PR_{max} stated in brake data table 1.

$$PR = WR \times c/h$$

Braking time

The total braking time from the disconnecting of brake until the machine is stopped is calculated as follows:

$$t = 104.6 \times \frac{J \times n_m}{T_B} + t_{21}$$

t and t_{21} are in ms

Maximum number of operations until wear of 0.1 mm

The service life, expressed in switching operations, can be calculated with the aid of the values WR0.1 given in brake data table 1.

$$L_{0.1} = \frac{WR_{0.1}}{WR}$$

Number of operations before readjusting the air gap

With the Xn values in table 1 we can calculate the number of required operations until the readjustment of air gap becomes necessary.

$$Ln = \frac{X_n - X}{0.1} \times L_{0.1}$$

7

Options

Separate brake supply

For brakes which need an independent supply, please note the variant code 086 and the voltage for feeding the brake. When the motor is supplied via a frequency converter, both in the case of DC and AC, the brake should be supplied separately at rated voltage (constant). The separate brake supply can be connected directly, no separate terminal box is needed.

Dust protection

To protect the brake disc against dust, the brake can be supplied with a rubber protection ring and V-ring.

Variant code 213 should be stated in the order.

Braking torque reduction

Reduced braking torque range, from 60% up to 33%, is available by using variant code 087.

Protective roof

To protect motors from accumulation of water, ice or snow when installed outdoors in the vertical position and with the shaft downwards, the assembly should be fitted with a protective roof.

Variant code 005 should in this case be stated in the order.

Ordering information

When placing an order, please state the following minimum data in the order, as in the example.

The product code of the motor is composed in accordance with the following example.

Motor type	M3ARF 112M
Pole number	4
Mounting arrangement (IM-code)	IM B3 (IM 1001)
Rated output	4 kW
Product code	3GAR112401-ADE
Variant codes if needed	
Brake information	

A	B	C	D,E,F, G
M3ARF	**112 M**	**3GAR 112 401**	**- ADE, 088 etc.**

1 - 4	5 - 6	7	8 - 10	11	12	13	14

A Motor type
M3VRF/M3ARF (DC brake)
M3VRS/M3ARS (AC brake)
B Motor size
C Product code
- **D** Mounting arrangement code
- **E** Voltage/frequency code
- **F** Generation code

G Variant code

Explanation of the product code:

Positions 1 to 4
3GAA = Totally enclosed motor, aluminum frame
3GVA = Totally enclosed motor, aluminum frame, alternative design

Position 4
R = Brake motor

Positions 5 and 6
IEC-size

06	= 63	**12**	= 112
07	= 71	**13**	= 132
08	= 80	**16**	= 160
09	= 90	**18**	= 180
10	= 100		

Position 7
Speed (Pole pairs)

1	= 2 poles	**6**	=12 poles
2	= 4 poles	**7**	= > 12 poles
3	= 6 poles	**8**	=Two-speed motors
4	= 8 poles	**9**	=Multi-speed motors
5	= 10 poles		

Position 8 to 10
Serial number

Position 11
- (dash)

Position 12
Mounting arrangement
A = Foot-mounted.
B = Flange-mounted. Large aluminum flange with clearance holes, sizes 63-100 and 180.
C = Flange-mounted. Small aluminum flange with tapped holes, sizes 63-100.
E = Flange-mounted. Large cast iron flange with clearance holes, sizes 112-160.
H = Foot- and flange-mounted. Large aluminum flange with clearance holes, sizes 63-100 and 180.
J = Foot- and flange-mounted. Small aluminum flange with tapped holes, sizes 63-100.
K = Foot- and flange-mounted. Large cast iron flange with clearance holes, sizes 112-160.
N = Flange mounted. Two piece cast iron flange (IEC-1) with clearance holes, sizes 90-132.
P = Foot- and flange-mounted. Two piece cast iron flange (IEC) with clearance holes, sizes 90-132.

Position 13
Voltage and frequency code
See table below

Position 14
Generation code = **C** (size 63), **E** (sizes 71-180)

The product code must be, if needed, followed by variant codes.

General purpose brake motors

Technical data for single-speed DC brake motors

IP 55 – IC 411 – Insulation class F, temperature rise class B – Brake IP 23 S

Output kW	Motor type	Product code	Speed r/min	Torque rated TN Nm	Torque braking TB Nm	Torque braking TS/TN	Torque braking K[1]	Efficiency 100%	Efficiency 75%	Power factor cos φ	Current IN A	Current IS/IN	c/h[2]	Moment of inertia J=1/4GD² kgm²	Weight Foot mounted kg
3000 r/min = 2 poles			**400 V 50 Hz**						**Basic design**						
0.18	**M3VRF 63 A**	3GVR 061 401-••C	2820	0.62	3.5	3.1	12.5	73.7	70.6	0.64	0.56	4.2	3500	0.00023	4.9
0.18	**M3VRF 63 MA**	3GVR 061 411-••C	2800	0.62	2.3	2.4	7.3	64.0	63.0	0.80	0.51	4.2	3500	0.00022	5
0.25	**M3VRF 63 B**	3GVR 061 402-••C	2810	0.87	3.6	3.3	8.33	77.5	75.8	0.71	0.66	4.5	3500	0.00026	5.4
0.25	**M3VRF 63 MB**	3GVR 061 412-••C	2800	0.86	2.2	2.3	5.2	68.0	66.0	0.83	0.64	4.2	3500	0.00028	6
0.37	**M3VRF 71 A**	3GVR 071 401-••E	2840	1.25	3.8	3.9	7.6	77.1	76.5	0.72	1.0	5.5	2600	0.00051	7
0.55	**M3VRF 71 B**	3GVR 071 402-••E	2830	1.86	3.6	3.7	5.26	79.2	78.2	0.76	1.35	5.7	2600	0.0006	8
0.75	**M3VRF 80 A**	3GVR 081 401-••E	2870	2.49	2.9	3.6	9.6	81.2	79.3	0.75	1.8	6.2	2000	0.00074	11
1.1	**M3VRF 80 B**	3GVR 081 402-••E	2850	3.69	2.3	3.5	6.48	81.4	79.5	0.78	2.5	6.1	2000	0.00078	12
1.5	**M3ARF 90 S**	3GAR 091 401-••E	2870	5.0	2.4	3.0	7.0	80.1	76.2	0.82	3.35	5.5	1300	0.0021	19
2.2	**M3ARF 90 L**	3GAR 091 402-••E	2880	7.5	2.7	3.0	4.7	83.6	83.9	0.87	4.37	7.0	1200	0.0026	22
3	**M3ARF 100 L**	3GAR 101 401-••E	2900	10	2.7	3.6	4.4	86.0	84.1	0.88	5.95	7.5	1000	0.00453	32
4	**M3ARF 112 M**	3GAR 111 401-••E	2850	13.4	2.8	3.0	6.41	86.0	86.2	0.91	7.4	7.5	500	0.01078	38
5.5	**M3ARF 132 SA**	3GAR 131 401-••E	2855	18.4	3.2	3.4	7.06	86.0	86.6	0.88	10.5	7.8	600	0.01657	57
7.5	**M3ARF 132 SB**	3GAR 131 402-••E	2860	25.1	3.4	3.6	5.17	88.0	86.2	0.89	13.9	8.5	500	0.01857	62
11	**M3ARF 160 MA**	3GAR 161 411-••E	2915	36	2.1	2.5	5.55	88.4	88.0	0.88	20.5	6.1	200	0.05096	124
15	**M3ARF 160 M**	3GAR 161 412-••E	2900	49	2.3	2.5	4.1	89.4	89.7	0.90	27	6.0	200	0.05596	134
18.5	**M3ARF 160 L**	3GAR 161 413-••E	2915	60	2.5	2.7	3.3	90.4	90.7	0.91	32.5	6.7	200	0.06396	139
22	**M3ARF 180 M**	3GAR 181 411-••E	2925	72	3.0	3.2	2.8	91.5	91.7	0.89	39	8.0	120	0.06264	158
3000 r/min = 2 poles			**400 V 50 Hz**						**High-output design**						
0.37	**M3VRF 63 BB**	3GVR 061 403-••C	2800	1.29	2.3	2.2	5.76	73.6	73.1	0.81	0.9	3.5	3500	0.00027	5.9
0.68	**M3VRF 71 BB**	3GVR 071 403-••E	2800	2.33	3.2	3.3	4.34	78.9	77.4	0.82	1.59	5.2	2400	0.0006	8
0.75	**M3VRF 71 BC**	3GVR 071 404-••E	2800	2.57	3.1	3.2	3.84	78.5	77.9	0.85	1.7	5.1	2400	0.0006	8
1.5	**M3VRF 80 C**	3GVR 081 403-••E	2840	5.13	2.8	3.1	4.7	82.4	82.2	0.83	3.16	5.5	1800	0.00111	13
2.7 [3]	**M3ARF 90 LB**	3GAR 091 403-••E	2860	9.0	2.6	3.0	3.88	80.7	83.5	0.86	5.7	7.0	1200	0.0029	24
4 [3]	**M3ARF 100 LB**	3GAR 101 402-••E	2900	13	2.7	3.6	3.38	85.0	84.3	0.86	8.1	7.5	1000	0.00543	36
5.5 [3]	**M3ARF 112 MB**	3GAR 111 402-••E	2855	18.4	2.7	2.9	4.67	86.5	87.1	0.93	9.9	7.3	500	0.01273	66
9.2 [3]	**M3ARF 132 SBB**	3GAR 131 404-••E	2825	31.1	3.2	3.5	4.18	86.0	88.2	0.93	16.6	7.3	500	0.02457	77
11 [3]	**M3ARF 132 SC**	3GAR 131 403-••E	2835	37	3.2	3.3	3.51	87.0	87.4	0.93	19.6	8.0	500	0.02383	77
22 [3]	**M3ARF 160 LB**	3GAR 161 404-••E	2920	72	2.6	2.6	2.77	92.1	92.1	0.91	38	7.1	200	0.06896	145

[1] Braking-torque ratio
[2] No-load (shaft-free) operations/hour
[3] Temperature rise class F.

The bullets in the product code indicate choice of mounting arrangement and voltage and frequency code, see below and ordering information page.

Code letters for supplementing product code for mounting arrangement:

Foot-mounted	**A**
Flange-mounted, 1 flange	**B** for frame sizes 63-100, 180; **E** for frame sizes 112-160.
Flange-mounted, 2 flanges	**N** for frame sizes 90-132
Flange-mounted, small flange	**C** for frame sizes 63-100

Code letters for supplementing product code for voltage and frequency (pos 13):

Motor size	S Motor 50 Hz	S Motor 60 Hz	S Brake (input rectifier voltage/brake voltage)	D Motor 50 Hz	D Motor 60 Hz	D Brake (input rectifier voltage/brake voltage)	X
63-132	220-240 VΔ 380-420 VY	250-280 VΔ	220-240 V/205 V d.c.	380-420 VΔ 660-690 VY	440-480 VΔ –	380-420 V/178 V d.c.	Any other rated voltage or frequency, 690 V maimum connection for motor and 500 V for brake (input rectifier)
160-180	230 VΔ 400 VY	265 VΔ	230 V/205 V d.c.	400 VΔ 690 VY	460 VΔ –	400 V/178 V d.c.	

Motor size	E Motor 50 Hz	E Brake (input rectifier voltage/brake voltage)	F Motor 50 Hz	F Brake (input rectifier voltage/brake voltage)
63-80	–	–	500 VY	500 V/223 V d.c.
90-180	500 VΔ	500 V/223 V d.c.	500 VY	500 V/223 V d.c.

General purpose brake motors

Technical data for single-speed DC brake motors

IP 55 – IC 411 – Insulation class F, temperature rise class B – Brake IP 23 S

Output kW	Motor type	Product code	Speed r/min	Torque rated TN Nm	braking TB Nm	TS/TN	K[1]	Efficiency 100%	75%	Power factor cos φ	Current IN A	IS/IN	c/h[2]	Moment of inertia J=1/4GD² kgm²	Weight Foot mounted kg
1500 r/min = 4 poles			**400 V 50 Hz**						**Basic design**						
0.12	**M3VRF 63 A**	3GVR 062 401-••C	1400	0.82	2.6	2.6	9.37	63.7	58.4	0.59	0.46	3.1	7100	0.00029	5
0.12	**M3VRF 63 MA**	3GVR 062 411-••C	1365	0.84	2.0	2.3	5.4	54.0	52.0	0.66	0.49	2.8	7100	0.00026	5
0.18	**M3VRF 63 B**	3GVR 062 402-••C	1380	1.25	2.5	2.6	5.76	65.6	62.1	0.64	0.63	3.1	7100	0.00036	5.5
0.18	**M3VRF 63 MB**	3GVR 062 412-••C	1380	1.25	2.2	2.4	3.6	61.0	57.0	0.63	0.68	3.2	7100	0.00033	5
0.25	**M3VRF 71 A**	3GVR 072 401-••E	1410	1.71	2.7	2.9	5.88	70.4	69.1	0.71	0.74	4.3	6500	0.00081	7
0.37	**M3VRF 71 B**	3GVR 072 402-••E	1420	2.51	2.6	2.8	4.0	74.6	72.1	0.69	1.05	4.4	6500	0.00104	8
0.55	**M3VRF 80 A**	3GVR 082 401-••E	1390	3.75	2.6	2.9	6.31	75.3	73.1	0.76	1.4	4.6	5000	0.00128	11
0.75	**M3VRF 80 B**	3GVR 082 402-••E	1410	5.08	3.5	3.9	4.7	78.2	75.6	0.74	1.9	4.7	5000	0.00159	12
1.1	**M3ARF 90 S**	3GAR 092 401-••E	1410	7.5	2.2	2.7	4.66	77.5	76.4	0.81	2.59	5.0	3200	0.0034	19
1.5	**M3ARF 90 L**	3GAR 092 402-••E	1420	10	2.4	2.9	3.5	80.3	78.1	0.79	3.45	5.0	3200	0.0045	22
2.2	**M3ARF 100 LA**	3GAR 102 401-••E	1430	15	2.4	2.9	2.93	83.0	82.7	0.81	4.8	5.5	2700	0.00733	32
3	**M3ARF 100 LB**	3GAR 102 402-••E	1430	20	2.5	2.9	2.2	85.0	83.9	0.81	6.48	5.5	2700	0.00863	35
4	**M3ARF 112 M**	3GAR 112 401-••E	1435	26.6	2.9	3.1	3.23	84.5	83.9	0.80	8.6	7.0	2500	0.01578	40
5.5	**M3ARF 132 S**	3GAR 132 401-••E	1450	36.2	2.2	3.0	3.59	87.0	87.7	0.83	11.1	7.3	1800	0.03357	60
7.5	**M3ARF 132 M**	3GAR 132 402-••E	1450	49.4	2.5	3.2	2.63	88.0	88.6	0.83	14.8	7.9	1400	0.04057	68
11	**M3ARF 160 M**	3GAR 162 411-••E	1465	72	2.4	3.0	3.2	88.4	88.8	0.78	22.5	6.9	500	0.07696	117
15	**M3ARF 160 L**	3GAR 162 412-••E	1460	98	2.8	2.8	2.3	90.0	90.5	0.82	29	7.2	500	0.08796	129
18.5	**M3ARF 180 M**	3GAR 182 411-••E	1455	121	2.6	2.9	1.9	90.4	90.4	0.84	35	7.0	360	0.10464	161
22	**M3ARF 180 L**	3GAR 182 412-••E	1460	144	3.0	3.1	1.6	91.1	91.5	0.82	42	8.0	360	0.12964	175
1500 r/min = 4 poles			**400 V 50 Hz**						**High-output design**						
0.25	**M3VRF 63 BB**	3GVR 062 403-••C	1370	1.75	2.5	2.1	4.16	70.3	67.4	0.67	0.78	3.2	7100	0.0004	6
0.45	**M3VRF 71 BB**	3GVR 072 403-••E	1390	3.11	2.1	2.3	3.22	75.5	75.3	0.76	1.15	4.1	6500	0.00104	8
0.55	**M3VRF 71 C**	3GVR 072 404-••E	1410	3.74	2.7	2.9	2.7	77.3	76.9	0.73	1.45	4.8	6500	0.00125	9
0.95	**M3VRF 80 C**	3GVR 082 403-••E	1410	6.44	2.9	3.3	3.75	78.9	77.9	0.75	2.35	4.3	500	0.00197	13
1.85 [3]	**M3ARF 90 L**	3GAR 092 403-••E	1390	13	2.2	2.4	2.69	79.5	78.1	0.80	4.4	4.5	3200	0.0045	22
2.2 [3]	**M3ARF 90 LB**	3GAR 092 404-••E	1390	15	2.2	2.4	2.33	80.3	81.0	0.83	4.85	4.5	3200	0.0048	23
4 [3]	**M3ARF 100 LC**	3GAR 102 403-••E	1420	27	2.5	2.8	1.62	81.0	81.7	0.82	8.65	5.5	2700	0.009	36
5.5 [3]	**M3ARF 112 MB**	3GAR 112 402-••E	1425	36.9	2.8	3.1	2.33	84.5	83.5	0.83	11.4	7.1	2500	0.018	47
9.2 [3]	**M3ARF 132 MBA**	3GAR 132 404-••E	1450	60	2.0	2.8	2.14	88.0	88.6	0.85	17.8	7.3	1400	0.05	83
11 [3]	**M3ARF 132 MB**	3GAR 132 403-••E	1450	72	2.5	2.7	1.79	88.0	89.4	0.86	21	8.3	500	0.05	83
18.5 [3]	**M3ARF 160 LB**	3GAR 162 403-••E	1450	122	2.9	2.9	1.88	90.5	88.9	0.84	36	6.9	500	0.107	143

[1] Braking-torque ratio
[2] No-load (shaft-free) operations/hour
[3] Temperature rise class F.

The bullets in the product code indicate choice of mounting arrangement and voltage and frequency code, see below and ordering information page.

Code letters for supplementing product code for mounting arrangement:

Foot-mounted	**A**
Flange-mounted, 1 flange	**B** for frame sizes 63-100, 180; **E** for frame sizes 112-160.
Flange-mounted, 2 flanges	**N** for frame sizes 90-132
Flange-mounted, small flange	**C** for frame sizes 63-100

Code letters for supplementing product code for voltage and frequency (pos 13):

Motor size	S Motor 50 Hz	60 Hz	Brake (input rectifier voltage/brake voltage)	D Motor 50 Hz	60 Hz	Brake (input rectifier voltage/brake voltage)	X
63-132	220-240 VΔ 380-420 VY	250-280 VΔ	220-240 V/205 V d.c.	380-420 VΔ 660-690 VY	440-480 VΔ –	380-420 V/178 V d.c.	Any other rated voltage or frequency, 690 V maimum connection for motor and 500 V for brake (input rectifier)
160-180	230 VΔ 400 VY	265 VΔ	230 V/205 V d.c.	400 VΔ 690 VY	460 VΔ –	400 V/178 V d.c.	

Motor size	E Motor 50 Hz	Brake (input rectifier voltage/brake voltage)	F Motor 50 Hz	Brake (input rectifier voltage/brake voltage)
63-80	–	–	500 VY	500 V/223 V d.c.
90-180	500 VΔ	500 V/223 V d.c.	500 VY	500 V/223 V d.c.

7

General purpose brake motors

Technical data for single-speed DC brake motors

IP 55 – IC 411 – Insulation class F, temperature rise class B – Brake IP 23 S

Output kW	Motor type	Product code	Speed r/min	Torque rated TN Nm	braking TB Nm	TS/TN	K[1]	Efficiency 100%	75%	Power factor cos φ	Current IN A	IS/IN	c/h[2]	Moment of inertia J=1/4GD² kgm²	Weight Foot mounted kg
1000 r/min = 6 poles			**400 V 50 Hz**						**Basic design**						
0.09	**M3VRF 63 A**	3GVR 063 401-••C	910	0.95	2.1	2.1	7.89	47.1	42.5	0.56	0.51	2.1	7700	0.0003	5
0.12	**M3VRF 63 B**	3GVR 063 402-••C	860	1.27	1.8	2.2	5.9	56.0	53.5	0.55	0.56	2.4	7700	0.00037	5.5
0.12	**M3VRF 63 MB**	3GVR 063 412-••C	860	1.27	1.8	2.2	3.5	56.0	50.0	0.55	0.56	2.4	7700	0.00033	5
0.18	**M3VRF 71 A**	3GVR 073 401-••E	920	1.88	2.1	2.2	5.31	61.1	57.7	0.69	0.64	2.9	7500	0.00078	7
0.25	**M3VRF 71 B**	3GVR 073 402-••E	920	2.61	2.5	2.7	3.84	64.9	62.3	0.65	0.86	3.2	7500	0.00096	8
0.37	**M3VRF 80 A**	3GVR 083 401-••E	925	3.82	3.1	3.4	6.28	72.9	70.8	0.72	1.04	3.8	7000	0.00186	11
0.55	**M3VRF 80 B**	3GVR 083 402-••E	925	5.68	2.9	3.1	4.22	73.3	71.9	0.71	1.55	3.4	7000	0.0022	12
0.75	**M3ARF 90 S**	3GAR 093 401-••E	930	7.5	1.9	2.3	4.66	71.5	70.7	0.67	2.36	4.0	3800	0.0034	19
1.1	**M3ARF 90 L**	3GAR 093 402-••E	930	11	2.1	2.4	3.18	74.4	72.5	0.69	3.25	4.0	3900	0.0045	22
1.5	**M3ARF 100 L**	3GAR 103 401-••E	950	15	1.9	2.3	2.93	80.0	77.0	0.71	3.92	4.5	3300	0.0086	34
2.2	**M3ARF 112 M**	3GAR 113 401-••E	940	22.3	2.1	2.7	3.85	80.5	79.3	0.74	5.4	5.6	3200	0.015	40
3	**M3ARF 132 S**	3GAR 133 401-••E	960	29.8	2.0	2.6	4.36	84.5	82.7	0.75	6.9	6.1	2400	0.033	59
4	**M3ARF 132 MA**	3GAR 133 402-••E	960	39.7	2.0	2.8	3.27	85.5	83.1	0.78	8.7	7.1	1900	0.04	66
5.5	**M3ARF 132 MB**	3GAR 133 403-••E	955	55	2.2	2.8	2.36	86.0	85.0	0.78	11.9	6.9	1900	0.047	74
7.5	**M3ARF 160 M**	3GAR 163 401-••E	970	74	2.0	2.8	3.14	89.3	88.4	0.79	15.4	6.7	600	0.087	129
11	**M3ARF 160 L**	3GAR 163 402-••E	970	109	2.2	2.9	2.13	89.8	88.5	0.78	23	7.1	600	0.127	149
1000 r/min = 6 poles			**400 V 50 Hz**						**High-output design**						
0.15	**M3VRF 63 BB**	3GVR 063 403-••C	900	1.61	2.2	2.3	4.68	56.9	52.1	0.54	0.74	2.2	7700	0.00042	6
0.32	**M3VRF 71 C**	3GVR 073 403-••E	920	3.33	2.6	2.8	3.1	64.8	61.6	0.63	1.15	3.2	7500	0.00125	9
1.3 [3]	**M3ARF 90 LB**	3GAR 093 403-••E	910	13.5	1.9	2.2	2.59	69.0	69.0	0.71	3.85	4.0	3800	0.005	24
2.2 [3]	**M3ARF 100 LC**	3GAR 103 402-••E	940	22	1.9	2.3	2.0	77.0	72.8	0.71	5.9	4.5	3300	0.009	37
3 [3]	**M3ARF 112 MB**	3GAR 113 402-••E	935	30.6	2.0	2.7	2.81	80.0	79.9	0.76	7.2	5.5	3200	0.018	46
6.5 [3]	**M3ARF 132 MC**	3GAR 133 404-••E	960	64	2.0	2.7	2.01	85.0	84.5	0.75	14.8	6.6	2400	0.051	79
14 [3]	**M3ARF 160 LB**	3GAR 163 403-••E	960	139	2.7	3.1	1.65	89.1	84.5	0.77	29.5	7.6	1900	0.147	164

[1] Braking-torque ratio
[2] No-load (shaft-free) operations/hour
[3] Temperature rise class F.

7

The bullets in the product code indicate choice of mounting arrangement and voltage and frequency code, see below and ordering information page.

Code letters for supplementing product code for mounting arrangement:

Foot-mounted **A**
Flange-mounted, 1 flange **B** for frame sizes 63-100, 180; **E** for frame sizes 112-160.
Flange-mounted, 2 flanges **N** for frame sizes 90-132
Flange-mounted, small flange **C** for frame sizes 63-100

Code letters for supplementing product code for voltage and frequency (pos 13):

Motor size	S Motor 50 Hz	S Motor 60 Hz	S Brake (input rectifier voltage/brake voltage)	D Motor 50 Hz	D Motor 60 Hz	D Brake (input rectifier voltage/brake voltage)	X
63-132	220-240 VΔ 380-420 VY	250-280 VΔ	220-240 V/205 V d.c.	380-420 VΔ 660-690 VY	440-480 VΔ –	380-420 V/178 V d.c.	Any other rated voltage or frequency, 690 V maimum connection for motor and 500 V for brake (input rectifier)
160-180	230 VΔ 400 VY	265 VΔ	230 V/205 V d.c.	400 VΔ 690 VY	460 VΔ –	400 V/178 V d.c.	

Motor size	E Motor 50 Hz	E Brake (input rectifier voltage/brake voltage)	F Motor 50 Hz	F Brake (input rectifier voltage/brake voltage)
63-80	–	–	500 VY	500 V/223 V d.c.
90-180	500 VΔ	500 V/223 V d.c.	500 VY	500 V/223 V d.c.

General purpose brake motors

Technical data for single-speed DC brake motors

IP 55 – IC 411 – Insulation class F, temperature rise class B – Brake IP 23 S

Output kW	Motor type	Product code	Speed r/min	Torque rated TN Nm	braking TB Nm	TS/TN	K[1]	Efficiency 100%	75%	Power factor cos φ	Current IN A	IS/IN	c/h[2]	Moment of inertia J=1/4GD² kgm²	Weight Foot mounted kg
750 r/min = 8 poles		**400 V 50 Hz**					**Basic design**								
0.055	**M3VRF 63 B**	3GVR 064 401-••C	680	0.78	2.1	2.1	9.4	38.3	31.8	0.48	0.45	1.8	7700	0.00037	5.5
0.09	**M3VRF 71 A**	3GVR 074 401-••E	690	1.25	2.3	2.3	7.69	45.8	37.5	0.57	0.52	2.2	7500	0.00078	7
0.12	**M3VRF 71 B**	3GVR 074 402-••E	690	1.67	2.5	2.5	5.88	46.4	38.1	0.55	0.69	2.2	7500	0.00096	8
0.18	**M3VRF 80 A**	3GVR 084 401-••E	700	2.46	3.2	3.6	9.6	59.9	54.5	0.60	0.75	3.1	7500	0.0022	11
0.25	**M3VRF 80 B**	3GVR 084 402-••E	700	3.52	2.9	3.1	6.85	70.7	67.4	0.62	0.85	3.1	7500	0.00245	12
0.37	**M3ARF 90 S**	3GAR 094 401-••E	700	5	1.9	2.4	7.0	61.5	43.4	0.56	1.6	3.0	4100	0.0032	19
0.55	**M3ARF 90 L**	3GAR 094 402-••E	690	7.5	1.7	2.1	4.66	62.9	56.4	0.57	2.35	3.0	4100	0.0045	22
0.75	**M3ARF 100 LA**	3GAR 104 401-••E	700	10	2.1	2.7	4.4	72.0	63.6	0.59	2.55	3.5	3600	0.0073	31
1.1	**M3ARF 100 LB**	3GAR 104 402-••E	700	15	2.1	2.7	2.93	73.0	68.8	0.64	3.35	3.5	3700	0.0086	34
1.5	**M3ARF 112 M**	3GAR 114 401-••E	695	20.6	1.9	2.4	4.17	74.5	75.9	0.65	4.5	4.1	3600	0.016	41
2.2	**M3ARF 132 S**	3GAR 134 401-••E	720	29.2	1.6	2.5	4.45	80.5	77.8	0.67	5.9	5.3	3000	0.04	66
3	**M3ARF 132 M**	3GAR 134 402-••E	720	39.8	1.8	2.5	3.26	82.0	79.2	0.68	7.8	5.5	2600	0.047	73
4	**M3ARF 160 MA**	3GAR 164 401-••E	715	54	2.1	2.4	4.39	84.1	81.1	0.69	10	5.2	600	0.11	139
5.5	**M3ARF 160 M**	3GAR 164 402-••E	710	74	2.4	2.6	3.17	84.7	75.0	0.70	13.4	5.4	600	0.11	139
7.5	**M3ARF 160 L**	3GAR 164 403-••E	715	100	2.4	2.8	2.31	86.3	82.4	0.70	18.1	5.4	600	0.127	154

[1] Braking-torque ratio
[2] No-load (shaft-free) operations/hour
[3] Temperature rise class F.

The bullets in the product code indicate choice of mounting arrangement and voltage and frequency code, see below and ordering information page.

Code letters for supplementing product code for mounting arrangement:

Foot-mounted	**A**
Flange-mounted, 1 flange	**B** for frame sizes 63-100, 180; **E** for frame sizes 112-160.
Flange-mounted, 2 flanges	**N** for frame sizes 90-132
Flange-mounted, small flange	**C** for frame sizes 63-100

Code letters for supplementing product code for voltage and frequency (pos 13):

Motor size	S Motor 50 Hz	60 Hz	Brake (input rectifier voltage/brake voltage)	D Motor 50 Hz	60 Hz	Brake (input rectifier voltage/brake voltage)	X
63-132	220-240 VΔ 380-420 VY	250-280 VΔ	220-240 V/205 V d.c.	380-420 VΔ 660-690 VY	440-480 VΔ –	380-420 V/178 V d.c.	Any other rated voltage or frequency, 690 V maimum connection for motor and 500 V for brake (input rectifier)
160-180	230 VΔ 400 VY	265 VΔ	230 V/205 V d.c.	400 VΔ 690 VY	460 VΔ –	400 V/178 V d.c.	
Motor size	**E** Motor 50 Hz		Brake (input rectifier voltage/brake voltage)	**F** Motor 50 Hz		Brake (input rectifier voltage/brake voltage)	
63-80	–		–	500 VY		500 V/223 V d.c.	
90-180	500 VΔ		500 V/223 V d.c.	500 VY		500 V/223 V d.c.	

General purpose brake motors

Technical data for two-speed DC brake motors

IP 55 – IC 411 – Insulation class F, temperature rise class F – Brake IP 23 S

Output kW	Motor type	Product code	Speed r/min	Torque rated TN Nm	braking TB Nm	TS/TN	K[1]	Efficiency %	Power factor cos φ	Current IN	IS/IN A	Moment of inertia J=1/4GD² kgm²	Weight IM 1001 kg
3000/1500 r/min = 2/4 poles			**400 V 50 Hz**					**Constant torque, two separate windings**					
1.1/0.55	**M3ARF 90 S**	3GAR 098 401-••E	2900/1450	3.6/3.6	35	1.4/1.5	9.7/9.7	74/62	0.85/0.64	2.5/2	5.1/3.6	0.0019	20
1.5/0.75	**M3ARF 90 L**	3GAR 098 402-••E	2900/1450	4.9/4.9	35	1.5/1.5	7.1/7.1	77/70	0.87/0.67	3.3/2.4	5.7/4.1	0.0024	23
2.0/1.0	**M3ARF 100 L**	3GAR 108 401-••E	2900/1460	6.5/6.5	44	1.9/1.4	7.7/7.7	76/67	0.89/0.66	4.3/3.3	6.2/4	0.0041	32
2.6/1.3	**M3ARF 112 M**	3GAR 118 401-••E	2900/1460	8.6/8.5	86	1.6/1.6	10/9.9	80/75	0.92/0.72	5.1/3.5	6.4/5	0.012	45
4.4/2.2	**M3ARF 132 SB**	3GAR 138 401-••E	2925/1450	14.4/14.5	130	2/1.3	10.4/10	81/74	0.86/0.73	9.1/5.9	7.3/4.5	0.016	55
5.6/2.8	**M3ARF 132 M**	3GAR 138 402-••E	2885/1440	18.5/18.6	130	1.8/1.4	8.1/8.1	82/77	0.93/0.75	10.6/7	6.7/5	0.022	76
3000/1500 r/min = 2-4 poles			**400 V 50 Hz**					**Constant torque, Dahlander connection**					
0.2/0.15	**M3VRF 63 A**	3GVR 068 401-••C	2800/1400	0.68/1.02	7.5	2.1/2	11/7.4	63/54	0.7/0.63	0.65/0.65	3.6/2.8	0.00019	5
0.3/0.2	**M3VRF 63 B**	3GVR 068 402-••C	2740/1370	1.05/1.4	7.5	1.7/2.1	7.1/5.4	59/55	0.78/0.63	0.95/0.85	2.8/2.8	0.00026	5.5
0.37/0.25	**M3VRF 71 A**	3GVR 078 401-••E	2700/1390	1.3/1.72	10	1.9/1.5	9.2/7	64/60	0.89/0.79	0.95/0.7	3.3/3.1	0.00066	7
0.48/0.31	**M3VRF 71 B**	3GVR 078 402-••E	2780/1400	1.66/2.15	10	1.4/2	7.1/5.6	68/68	0.91/0.76	1.2/0.9	3.6/4	0.00089	8
0.55/0.37	**M3VRF 71 C**	3GVR 078 403-••E	2800/1400	1.87/2.52	10	1.8/1.9	6.4/4.8	66/64	0.8/0.65	1.5/1.2	4.7/4.3	0.0011	8.5
0.63/0.5	**M3VRF 80 A**	3GVR 088 401-••E	2690/1400	2.25/3.42	24	1.8/1.9	7.6/5.5	66/67	0.87/0.79	1.6/1.35	3.6/4.2	0.0013	11
0.85/0.65	**M3VRF 80 B**	3GVR 088 402-••E	2725/1405	2.99/4.43	24	1.9/2	5.4/3.6	70/70	0.88/0.8	2/1.7	4/4.4	0.0016	12.5
1.1/0.8	**M3VRF 80 C**	3GVR 088 403-••E	2730/1410	3.8/5.38	24	2/2	4.7/3.3	72/71	0.88/0.79	2.55/2.05	4.2/4.7	0.002	13
1.3/1	**M3ARF 90 S**	3GAR 098 403-••E	2730/1400	4.5/6.8	35	2/1.5	7.8/5.1	71/71	0.88/0.8	3.1/2.6	3.9/3.8	0.0032	20
1.9/1.5	**M3ARF 90 L**	3GAR 098 404-••E	2820/1420	6.4/10	35	2.8/2	5.5/3.5	74/75	0.82/0.76	4.4/3.9	5.1/4.4	0.0043	23
2.5/2.1	**M3ARF 100 LA**	3GAR 108 402-••E	2800/1430	8.5/14	44	2.2/1.6	5.9/3.6	68/76	0.88/0.81	6/5	4.8/4.4	0.0069	32
3.4/2.5	**M3ARF 100 LB**	3GAR 108 403-••E	2810/1430	11.5/18	44	2.2/1.9	4.3/2.7	78/80	0.88/0.85	7.2/5.9	5.3/5.4	0.0082	35
4/2.6	**M3ARF 112 M**	3GAR 118 402-••E	2865/1430	13.3/17.4	86	1.8/2.3	10/9.9	82/77	0.93/0.76	7.6/6.5	6.3/6.2	0,012	45
4.7/3.1	**M3ARF 132 SB**	3GAR 138 403-••E	2820/1420	15.9/20.8	130	1.8/2.2	7.2/5.2	79/77	0.92/0.76	9.2/7.7	5.5/5.7	0,016	55
6.3/4.4	**M3ARF 132 SA**	3GAR 138 411-••E	2895/1445	20/8/2029	130	1.7/1.6	10.4/10	85/84	0.94/0.8	11.4/9.5	6.5/5.7	0,0155	58
7.2/4.8	**M3ARF 132 M**	3GAR 138 404-••E	2870/1435	24/31.9	130	2.4/2.5	6.9/3.6	84/81	0.92/0.76	13.3/11.5	7.1/6.2	0,022	76
8/6.2	**M3ARF 132 SC**	3GAR 138 412-••E	2910/1440	26.2/41.1	130	1.9/1.6	6.3/4.7	87/85	0.95/0.83	14/12.7	7.8/5.6	0,0215	78
9.6/7	**M3ARF 132 MD**	3GAR 138 413-••E	2900/1440	31.6/46.4	130	1.8/1.7	4.7/3.2	87/85	0.95/0.85	16.8/14.1	7.6/5.9	0,026	85
12.5/9	**M3ARF 160 M**	3GAR 168 404-••E	2890/1440	41/60	230	1.4/1.8	5.6/3.8	85.5/85.5	0.93/0.8	22.5/19	5.2/4.6	0,054	129
15/10.5	**M3ARF 160 L**	3GAR 168 405-••E	2900/1445	49/69	230	1.6/2.1	4.7/3.3	87/86	0.93/0.77	27/23	5.8/4.9	0,057	139
1500/1000 r/min = 4/6 poles			**400 V 50 Hz**					**Constant torque, two separate windings**					
0.11/0.08	**M3VRF 63 B**	3GVR 068 403-••C	1390/860	0.75/0.88	7.5	1.4/1.8	10/8.5	40/25	0.7/0.72	0.55/0.62	2.5/1.8	0.00026	5.5
0.3/0.2	**M3VRF 71 A**	3GVR 078 404-••E	1390/900	1.37/0.79	10	1.1/1.05	15.2/8.8	51/40	0.82/0.72	0.7/0.5	2.8/2	0.00066	7
0.37/0.22	**M3VRF 71 B**	3GVR 078 405-••E	1380/900	2.07/1.91	10	1/1.1	6.3/5.8	58/40	0.83/0.8	0.9/0.8	2.7/1.9	0.00089	8
0.43/0.28	**M3VRF 80 A**	3GVR 088 404-••E	1380/910	2.54/3.02	24	1.5/1.4	7.1/6	60/54	0.85/0.81	1.4/1.2	3.1/2.9	0.0019	12
0.58/0.37	**M3VRF 80 B**	3GVR 088 405-••E	1390/920	4/3.85	24	1.5/1.5	4/3.5	63/58	0.85/0.8	1.6/1.15	3.3/3.2	0.0022	12.5
0.8/0.5	**M3ARF 90 S**	3GAR 098 405-••E	1430/940	5.3/5	35	1.5/1.4	7/6.6	68/57	0.8/0.66	2.2/2	3.9/2.8	0.0032	20
1.2/0.75	**M3ARF 90 L**	3GAR 098 406-••E	1430/940	8/7.6	35	1.7/1.5	4.6/4.4	73/63	0.81/0.67	3/2.6	4.4/3.1	0.0043	23
1.5/0.9	**M3ARF 100 LA**	3GAR 108 404-••E	1440/960	9.9/8.9	44	1.5/1.5	5.6/5.1	75/69	0.84/0.65	3.5/3	4.7/3.8	0.0069	32
1.8/1.1	**M3ARF 100 LB**	3GAR 108 405-••E	1460/960	11/11	44	2.1/1.6	4.5/4.5	77/70	0.78/0.64	4.4/3.6	5.8/3.9	0.0082	35
2.6/1.7	**M3ARF 112 M**	3GAR 118 403-••E	1445/960	17.2/16.9	86	1.5/1.5	5/4.9	80/70	0.85/0.76	5.5/4.4	5.9/5.2	0.018	45
3.3/2.2	**M3ARF 132 S**	3GAR 138 405-••E	1470/980	21.4/21.4	130	1.4/1.2	7/7	82/76	0.8/0.65	7.1/6.4	6.8/4.6	0.038	61
4.5/3	**M3ARF 132 M**	3GAR 138 406-••E	1470/980	29.2/29.2	130	1.4/1.5	5.1/5.1	82/77	0.81/0.7	9.8/8	7.2/5.6	0.048	79
5.5/3.7	**M3ARF 132 MD**	3GAR 138 414-••E	1460/960	36/36.8	130	1.9/1.8	4.2/4.2	85/81	0.88/0.8	10.7/8.3	8/6.3	0.036	84
7.5/5.5	**M3ARF 160 M**	3GAR 168 406-••E	1465/965	49/54	230	2.1/1.8	3.1/2.7	85.5/80.5	0.83/0.77	15.5/13	7.1/4.7	0.089	129
11.5/8.5	**M3ARF 160 L**	3GAR 168 407-••E	1465/965	75/84	230	2.1/1.8	2.9/2.7	86.5/82.5	0.84/0.76	23/19.5	7/4.9	0.119	139

[1] Braking-torque ratio

General purpose brake motors

Technical data for two-speed DC brake motors

IP 55 – IC 411 – Insulation class F, temperature rise class F – Brake IP 23 S

Output kW	Motor type	Product code	Speed r/min	Torque rated TN Nm	braking TB Nm	TS/TN	K[1]	Efficiency %	Power factor cos φ	Current IN	IS/IN A	Moment of inertia J=1/4GD² kgm²	Weight IM 1001 kg
3000/750 r/min = 2/8 poles			**400 V 50 Hz**					**Constant torque, two separate windings**					
0.25/0.06	**M3VRF 71 A**	3GVR 078 408-••E	2760/660	0.86/0.86	10	1/1.3	14/14	52/36	0.94/0.7	0.75/0.35	2.9/1.9	0.00066	7
0.37/0.09	**M3VRF 71 B**	3GVR 078 409-••E	2800/660	1.26/1.3	10	1/1.6	9.5/9.2	68/41	0.87/0.65	0.9/0.5	2.8/2	0.00089	8
0.5/0.12	**M3VRF 80 A**	3GVR 088 409-••E	2730/700	1.78/1.64	24	1.3/2	10.9/9.6	60/38	0.87/0.58	1.4/0.8	3.2/2.3	0.0013	12.5
0.66/0.15	**M3VRF 80 B**	3GVR 088 410-••E	2780/700	2.55/2.45	24	1.4/2.2	7.3/7.1	65/40	0.87/0.58	1.65/0.95	3.8/2.5	0.0016	13
0.75/0.18	**M3ARF 90 LA**	3GAR 098 411-••E	2875/720	2.5/2.4	35	2.3/1.3	14/14	71.2/46.3	0.8/0.51	1.9/1.1	5.7/2.4	0.0043	23
1.3/0.33	**M3ARF 90 LB**	3GAR 098 412-••E	2780/690	4.4/4.5	35	1.8/1.2	8/8	71/52	0.92/0.62	2.9/1.5	4.5/2.3	0.0043	23
1.8/0.5	**M3ARF 100 LB**	3GAR 108 410-••E	2860/705	6.6.2007	44	1.7/1.3	8.3/7.4	80/54	0.93/0.64	3.5/2.1	5.3/2.6	0.0082	35
2.2/0.59	**M3ARF 112 MC**	3GAR 118 406-••E	2900/720	7.2/7.8	86	2.4/1.6	11.8/11	78/62	0.87/0.55	4.9/2.5	7/3.5	0.015	42
3.3/0.95	**M3ARF 132 SA**	3GAR 138 415-••E	2940/730	10.7/12.4	130	2.6/1.2	14/12	81/72	0.95/0.52	6.2/3.7	9.5/4.3	0.0215	65
4.4/1.3	**M3ARF 132 MC**	3GAR 138 416-••E	2920/725	14.4/17.1	130	2.2/1.3	10.7/8.8	82/74	0.94/0.62	8.3/4.1	8.6/4	0.03	77
1500/750 r/min = 4/8 poles			**400 V 50 Hz**					**Constant torque, two separate windings**					
0.55/0.25	**M3ARF 90 S**	3GAR 098 407-••E	1450/700	3.6/3.4	35	1.3/1.4	10.3/9.7	62/51	0.78/0.59	1.9/1.2	4.2/2.3	0.0032	20
0.75/0.37	**M3ARF 90 L**	3GAR 098 408-••E	1450/700	4.9/5	35	1.4/1.5	7.1/7	66/57	0.75/0.57	2.2/1.7	4.1/2.5	0.0043	23
1.1/0.55	**M3ARF 100 LA**	3GAR 108 406-••E	1460/710	7.2/7.4	44	1.2/1.2	6.9/6.8	68/62	0.77/0.61	3.1/2.2	4.2/2.6	0.0069	32
1.5/0.75	**M3ARF 100 LB**	3GAR 108 407-••E	1440/700	9.8/10	44	1.3/1.2	5.1/5	72/60	0.82/0.6	3.7/2.9	4.6/2.7	0.0082	35
1.8/0.9	**M3ARF 112 M**	3GAR 118 404-••E	1460/715	11.7/12	86	1.2/1.6	7.3/7.1	77/65	0.76/0.66	4.4/3	6.5/4	0.018	45
2.5/1.3	**M3ARF 132 S**	3GAR 138 407-••E	1480/735	16.2/17	130	1.6/1.4	9.3/8.8	80/67	0.79/0.56	5.8/6	6/3.7	0.038	61
3.3/1.7	**M3ARF 132 M**	3GAR 138 408-••E	1470/725	21.4/22.4	130	1.6/1.4	7/6.7	81/71	0.79/0.58	7.5/6	7/4.2	0.048	79
1500/750 r/min = 4-8 poles			**400 V 50 Hz**					**Constant torque, Dahlander connection**					
0.11/0.06	**M3VRF 63 B**	3GVR 068 404-••C	1390/660	0.75/0.87	7.5	1.6/2.5	10/8.6	54/33	0.6/0.49	0.5/0.55	3/1.7	0.00026	5.5
0.18/0.11	**M3VRF 71 A**	3GVR 078 406-••E	1380/680	1.24/1.54	10	1.9/2.2	9.7/7.8	54/37	0.7/0.53	0.7/0.8	3.2/2.5	0.00066	7
0.3/0.15	**M3VRF 71 B**	3GVR 078 407-••E	1400/700	2.05/2.05	10	2/2.5	5.9/5.9	60/47	0.74/0.51	0.9/0.9	3.2/2.6	0.00089	8
0.45/0.25	**M3VRF 80 A**	3GVR 088 406-••E	1380/700	3.12/3.42	24	1.7/2.1	6.5/6	65/48	0.87/0.58	1.15/1.3	3.5/2.7	0.0019	11
0.63/0.33	**M3VRF 80 B**	3GVR 088 407-••E	1380/705	4.37/4.48	24	1.7/2.2	4/3.9	67/50	0.88/0.56	1.55/1.7	3.5/2.8	0.0022	12
0.75/0.37	**M3VRF 80 C**	3GVR 088 408-••E	1390/710	5.16/4.98	24	1.9/2.5	3.6/3.5	70/52	0.86/0.51	1.8/2	3.9/2.9	0.0025	12.5
0.7/0.37	**M3ARF 90 S**	3GAR 098 409-••E	1420/700	4.7/5.1	35	1.6/1.6	7.4/6.9	72/50	0.8/0.57	1.8/1.9	4.4/2.3	0.0032	20
1.1/0.55	**M3ARF 90 L**	3GAR 098 410-••E	1390/685	7.4/7.5	35	1.4/1.5	4.7/4.7	70/55	0.84/0.58	2.6/2.6	4.1/2.3	0.0043	23
1.5/0.75	**M3ARF 100 LA**	3GAR 108 408-••E	1440/710	10/10	44	1.4/1.5	5/5	76/62	0.85/0.57	3.4/3.2	4.6/2.8	0.0069	32
2/0.95	**M3ARF 100 LB**	3GAR 108 409-••E	1440/710	13/12	44	1.4/1.6	4.2/3.8	78/64	0.86/0.55	4.4/4	4.8/2.9	0.0082	35
2.5/1.5	**M3ARF 112 M**	3GAR 118 405-••E	1410/705	16.9/20.3	86	1.4/1.5	5/4.2	78/67	0.9/0.66	5.1/4.9	5.5/4.1	0.018	45
3.8/1.9	**M3ARF 132 S**	3GAR 138 409-••E	1450/730	25/24.9	130	1.4/1.3	6/6	82/70	0.84/0.52	7.7/7.6	5.6/3.7	0.038	61
5/2.5	**M3ARF 132 M**	3GAR 138 410-••E	1455/730	32.8/32.7	130	1.7/2	4.6/4.6	85/73	0.88/0.52	9.6/9.6	6.9/4.8	0.048	79
8/4.5	**M3ARF 160 M**	3GAR 168 410-••E	1440/730	53/59	230	1.3/1.4	4.3/3.9	84.5/79.5	0.86/0.6	16/13.5	4.5/3.4	0.089	129
12/7	**M3ARF 160 L**	3GAR 168 411-••E	1445/730	79/92	230	1.5/1.4	2.9/2.5	86.5/81	0.87/0.59	23/21	5/3.5	0.119	139

[1] Braking-torque ratio

The bullets in the product code indicate choice of mounting arrangement and voltage and frequency code, see below and ordering information page.

Code letters for supplementing product code for mounting arrangement (pos 12):

Foot-mounted **A**
Flange-mounted, 1 flange **B** for frame sizes 63-100, 180; **E** for frame sizes 112-160.
Flange-mounted, 2 flanges **N** for frame sizes 90-132
Flange-mounted, small flange **C** for frame sizes 63-100

Code letters for supplementing product code for voltage and frequency (pos 13):

Motor size	A Motor 50 Hz	A Brake (input rectifier voltage/brake voltage)	B Motor 50 Hz	B Brake (input rectifier voltage/brake voltage)	S Motor	S Brake (input rectifier voltage/brake voltage)
63-132	–		–		220-230 V	220-230 V/205 V d.c.
160	220 V	220 V/205 V d.c.	380 V	380 V/178 V d.c.	230 V	230 V/205 V d.c.

Motor size	D Motor 50 Hz	D Brake (input rectifier voltage/brake voltage)	E Motor 50 Hz	E Brake (input rectifier voltage/brake voltage)	X
63-132	380-400 V	380-400 V/178 V d.c.	500 V	500 V/223 V d.c.	Any other rated voltage or frequency, 690 V maximum connection for motor and 500 V for brake (input rectifier)
160	400 V	400 V/178 V d.c.	500 V	500 V/223 V d.c.–	

7

General purpose brake motors

Technical data for single-speed motors with three phase AC brake

IP 55 – IC 411 – Insulation class F, temperature rise class B – Brake IP 23 S

Output kW	Motor type	Product code	Speed r/min	Torque rated TN Nm	braking TB Nm	TS/TN	K[1]	Efficiency 100%	75%	Power factor cos φ	Current IN A	IS/IN	c/h[2]	Moment of inertia J=1/4GD² kgm²	Weight Foot mounted kg
3000 r/min = 2 poles			**400 V 50 Hz**						**Basic design**						
0.18	**M3VRS 63 A**	3GVR 061 451-••C	2820	0.62	3.5	3.1	12.5	73.7	70.6	0.64	0.56	4.2	3500	0.00023	4.9
0.18	**M3VRS 63 MA**	3GVR 061 461-••C	2800	0.62	2.3	2.4	7.3	64.0	63.0	0.80	0.51	4.2	3500	0.00022	5
0.25	**M3VRS 63 B**	3GVR 061 452-••C	2810	0.87	3.6	3.3	8.33	77.5	75.8	0.71	0.66	4.5	3500	0.00026	5.4
0.25	**M3VRS 63 MB**	3GVR 061 462-••C	2800	0.86	2.2	2.3	5.2	68.0	66.0	0.83	0.64	4.2	3500	0.00028	6
0.37	**M3VRS 71 A**	3GVR 071 451-••E	2840	1.25	3.8	3.9	7.69	77.1	76.5	0.72	1.0	5.5	2600	0.00051	7
0.55	**M3VRS 71 B**	3GVR 071 452-••E	2830	1.86	3.6	3.7	5.26	79.2	78.2	0.76	1.35	5.7	2600	0.0006	8
0.75	**M3VRS 80 A**	3GVR 081 451-••E	2870	2.49	2.9	3.6	9.6	81.2	79.3	0.75	1.8	6.2	2000	0.00074	11
1.1	**M3VRS 80 B**	3GVR 081 452-••E	2850	3.69	2.3	3.5	6.48	81.4	79.5	0.78	2.5	6.1	2000	0.00078	12
1.5	**M3ARS 90 S**	3GAR 091 451-••E	2870	5.0	2.4	3.0	7.0	80.1	76.2	0.82	3.35	5.5	1300	0.021	19
2.2	**M3ARS 90 L**	3GAR 091 452-••E	2880	7.5	2.7	3.0	4.6	83.6	83.9	0.87	4.37	7.0	1200	0.0026	22
3	**M3ARS 100 L**	3GAR 101 451-••E	2900	10	2.7	3.6	4.4	86.0	84.1	0.88	5.95	7.5	1000	0.00453	32
4	**M3ARS 112 M**	3GAR 111 451-••E	2850	13.4	2.8	3.0	6.41	86.0	86.2	0.91	7.4	7.5	500	0.01078	38
5.5	**M3ARS 132 SA**	3GAR 131 451-••E	2855	18.4	3.2	3.4	7.06	86.0	86.6	0.88	10.5	7.8	600	0.01657	57
7.5	**M3ARS 132 SB**	3GAR 131 452-••E	2860	25.1	3.4	3.6	5.17	88.0	86.2	0.89	13.9	8.5	500	0.01857	62
11	**M3ARS 160 MA**	3GAR 161 461-••E	2915	36	2.1	2.5	5.55	88.4	88.0	0.88	20.5	6.1	200	0.05096	124
15	**M3ARS 160 M**	3GAR 161 462-••E	2900	49	2.3	2.5	4.1	89.4	89.7	0.90	27	6.0	200	0.05596	134
18.5	**M3ARS 160 L**	3GAR 161 463-••E	2915	60	2.5	2.7	3.3	90.4	90.7	0.91	32.5	6.7	200	0.06396	139
22	**M3ARS 180 M**	3GAR 181 461-••E	2925	72	3.0	3.2	2.8	91.5	91.7	0.89	39	8.0	120	0.06264	158
3000 r/min = 2 poles			**400 V 50 Hz**						**High-output design**						
0.37	**M3VRS 63 BB**	3GVR 061 453-••C	2800	1.29	2.3	2.2	5.76	73.6	73.1	0.81	0.9	3.5	3500	0.00027	5.9
0.68	**M3VRS 71 BB**	3GVR 071 453-••E	2800	2.33	3.2	3.3	4.34	78.9	77.4	0.82	1.59	5.2	2400	0.0006	8
0.75	**M3VRS 71 BC**	3GVR 071 454-••E	2800	2.57	3.1	3.2	3.84	78.5	77.9	0.85	1.7	5.1	2400	0.0006	8
1.5	**M3VRS 80 C**	3GVR 081 453-••E	2840	5.13	2.8	3.1	4.7	82.4	82.2	0.83	3.16	5.5	1800	0.00111	13
2.7 [3]	**M3ARS 90 LB**	3GAR 091 453-••E	2860	9.0	2.6	3.0	3.9	80.7	83.5	0.86	5.7	7.0	1200	0.0029	24
4 [3]	**M3ARS 100 LB**	3GAR 101 452-••E	2900	13	2.7	3.6	3.38	85.0	84.3	0.86	8.1	7.5	1000	0.00543	36
5.5 [3]	**M3ARS 112 MB**	3GAR 111 452-••E	2855	18.4	2.7	2.9	4.67	86.5	87.1	0.93	9.9	7.3	500	0.01273	66
9.2 [3]	**M3ARS 132 SBB**	3GAR 131 454-••E	2825	31.1	3.2	3.5	4.18	86.0	88.2	0.93	16.6	7.3	500	0.02457	77
11 [3]	**M3ARS 132 SC**	3GAR 131 453-••E	2835	37	3.2	3.3	3.51	87.0	87.4	0.93	19.6	8.0	500	0.02383	77
22 [3]	**M3ARS 160 LB**	3GAR 161 454-••E	2920	72	2.6	2.6	2.77	92.1		0.91	38	7.1	200	0.06896	145

[1] Braking-torque ratio
[2] No-load (shaft-free) operations/hour
[3] Temperature rise class F.

The bullets in the product code indicate choice of mounting arrangement and voltage and frequency code, see below and ordering information page.

Code letters for supplementing product code for mounting arrangement:

Foot-mounted **A**
Flange-mounted, 1 flange **B** for frame sizes 63-100, 180; **E** for frame sizes 112-160.
Flange-mounted, 2 flanges **N** for frame sizes 90-132
Flange-mounted, small flange **C** for frame sizes 63-100

Code letters for supplementing product code for voltage and frequency (pos 13):

Motor size	S Motor 50 Hz	S Motor 60 Hz	S Brake 50 Hz	S Brake 60 Hz	D Motor 50 Hz	D Motor 60 Hz	D Brake 50 Hz	D Brake 60 Hz	G Motor 50 Hz	G Brake 50 Hz	H Motor 50 Hz	H Brake 50 Hz	X
63-132	220-240 VΔ 380-420 VY	250-280 VΔ 440-480 VY	230 VΔ 400 VY	265 VΔ 460 VY	380-420 VΔ 660-690 VY	440-480 VΔ –	400 VΔ 690 VY	460 VΔ –	–	–	–	–	Any other rated voltage or frequency, 690V maximum
160-180	230 VΔ 400 VY	265 VΔ 460 VY	230 VΔ 400 VY	265 VΔ 460 VY	400 VΔ 690 VY	460 VΔ –	400 VΔ 690 VY	460 VΔ –	415 VY	415 VY	415 VΔ	415 VΔ	

General purpose brake motors

Technical data for single-speed motors with three phase AC brake

IP 55 – IC 411 – Insulation class F, temperature rise class B – Brake IP 23 S

Output kW	Motor type	Product code	Speed r/min	Torque rated TN Nm	Torque braking TB Nm	TS/TN	K[1]	Efficiency 100%	Efficiency 75%	Power factor cos φ	Current IN A	IS/IN	c/h[2]	Moment of inertia J=1/4GD² kgm²	Weight Foot mounted kg
1500 r/min = 4 poles			**400 V 50 Hz**						**Basic design**						
0.12	**M3VRS 63 A**	3GVR 062 451-••C	1400	0.82	2.6	2.6	9.37	63.7	58.4	0.59	0.46	3.1	7100	0.00029	5
0.12	**M3VRS 63 MA**	3GVR 062 461-••C	1365	0.84	2.0	2.3	5.4	54.0	52.0	0.66	0.49	2.8	7100	0.00026	5
0.18	**M3VRS 63 B**	3GVR 062 452-••C	1380	1.25	2.5	2.6	5.76	65.6	62.1	0.64	0.63	3.1	7100	0.00036	5.5
0.18	**M3VRS 63 MB**	3GVR 062 462-••C	1380	1.25	2.2	2.4	3.6	61.0	57.0	0.63	0.68	3.2	7100	0.00033	5
0.25	**M3VRS 71 A**	3GVR 072 451-••E	1410	1.71	2.7	2.9	5.88	70.4	69.1	0.71	0.74	4.3	6500	0.00081	7
0.37	**M3VRS 71 B**	3GVR 072 452-••E	1420	2.51	2.6	2.8	4.0	74.6	72.1	0.69	1.05	4.4	6500	0.00104	8
0.55	**M3VRS 80 A**	3GVR 082 451-••E	1390	3.75	2.6	2.9	6.31	75.3	73.1	0.76	1.4	4.6	5000	0.00128	11
0.75	**M3VRS 80 B**	3GVR 082 452-••E	1410	5.08	3.5	3.9	4.7	78.2	75.6	0.74	1.9	4.7	5000	0.00159	12
1.1	**M3ARS 90 S**	3GAR 092 451-••E	1410	7.5	2.2	2.7	4.66	77.5	76.4	0.81	2.59	5.0	3200	0.0034	19
1.5	**M3ARS 90 L**	3GAR 092 452-••E	1420	10	2.4	2.9	3.5	80.3	78.1	0.79	3.45	5.0	3200	0.0045	22
2.2	**M3ARS 100 LA**	3GAR 102 451-••E	1430	15	2.4	2.9	2.93	83.0	82.7	0.81	4.8	5.5	2700	0.00733	32
3	**M3ARS 100 LB**	3GAR 102 452-••E	1430	20	2.5	2.9	2.2	85.0	83.9	0.81	6.48	5.5	2700	0.00863	35
4	**M3ARS 112 M**	3GAR 112 451-••E	1435	26.6	2.9	3.1	3.23	84.5	83.9	0.80	8.6	7.0	2500	0.01578	40
5.5	**M3ARS 132 S**	3GAR 132 451-••E	1450	36.2	2.2	3.0	3.59	87.0	87.7	0.83	11.1	7.3	1800	0.03357	60
7.5	**M3ARS 132 M**	3GAR 132 452-••E	1450	49.4	2.5	3.2	2.63	88.0	88.6	0.83	14.8	7.9	1400	0.04057	68
11	**M3ARS 160 M**	3GAR 162 461-••E	1465	72	2.4	3.0	3.2	88.4	88.8	0.78	22.5	6.9	500	0.07696	117
15	**M3ARS 160 L**	3GAR 162 462-••E	1460	98	2.8	2.8	2.3	90.0	90.5	0.82	29	7.2	500	0.08796	129
18.5	**M3ARS 180 M**	3GAR 182 461-••E	1455	121	2.6	2.9	1.9	90.4	90.4	0.84	35	7.0	360	0.10464	161
22	**M3ARS 180 L**	3GAR 182 462-••E	1460	144	3.0	3.1	1.6	91.1	91.5	0.82	42	8.0	360	0.12964	175
1500 r/min = 4 poles			**400 V 50 Hz**						**High-output design**						
0.25	**M3VRS 63 BB**	3GVR 062 453-••C	1370	1.75	2.5	2.1	4.28	70.3	67.4	0.67	0.78	3.2	7100	0.0004	6
0.45	**M3VRS 71 BB**	3GVR 072 453-••E	1390	3.11	2.1	2.3	3.22	75.5	75.3	0.76	1.15	4.1	6500	0.00104	8
0.55	**M3VRS 71 C**	3GVR 072 454-••E	1410	3.74	2.7	2.9	2.7	77.3	76.9	0.73	1.45	4.8	6500	0.00125	9
0.95	**M3VRS 80 C**	3GVR 082 453-••E	1410	6.44	2.9	3.3	3.75	78.9	77.9	0.75	2.35	4.3	500	0.00197	13
1.85 [3]	**M3ARS 90 L**	3GAR 092 453-••E	1390	13	2.2	2.4	2.69	79.5	78.1	0.80	4.4	4.5	3200	0.0045	22
2.2 [3]	**M3ARS 90 LB**	3GAR 092 454-••E	1390	15	2.2	2.4	2.33	80.3	81.0	0.83	4.85	4.5	3200	0.0048	23
4 [3]	**M3ARS 100 LC**	3GAR 102 453-••E	1420	27	2.5	2.8	1.62	81.0	81.7	0.82	8.65	5.5	2700	0.009	36
5.5 [3]	**M3ARS 112 MB**	3GAR 112 452-••E	1425	36.9	2.8	3.1	2.14	84.5	83.5	0.83	11.4	7.1	2500	0.018	47
9.2 [3]	**M3ARS 132 MBA**	3GAR 132 454-••E	1450	60	2.0	2.8	2.14	88.0	88.6	0.85	17.8	7.3	1400	0.05	83
11 [3]	**M3ARS 132 MB**	3GAR 132 453-••E	1450	72	2.5	2.7	1.79	88.0	89.4	0.86	21	8.3	500	0.05	83
18.5 [3]	**M3ARS 160 LB**	3GAR 162 453-••E	1450	122	2.9	2.9	1.88	90.5	88.9	0.84	36	6.9	500	0.107	143

[1] Braking-torque ratio
[2] No-load (shaft-free) operations/hour
[3] Temperature rise class F.

The bullets in the product code indicate choice of mounting arrangement and voltage and frequency code, see below and ordering information page.

Code letters for supplementing product code for mounting arrangement:

Foot-mounted	**A**
Flange-mounted, 1 flange	**B** for frame sizes 63-100, 180; **E** for frame sizes 112-160.
Flange-mounted, 2 flanges	**N** for frame sizes 90-132
Flange-mounted, small flange	**C** for frame sizes 63-100

Code letters for supplementing product code for voltage and frequency (pos 13):

Motor size	S Motor 50 Hz	S Motor 60 Hz	S Brake 50 Hz	S Brake 60 Hz	D Motor 50 Hz	D Motor 60 Hz	D Brake 50 Hz	D Brake 60 Hz	G Motor 50 Hz	G Brake 50 Hz	H Motor 50 Hz	H Brake 50 Hz	X
63-132	220-240 VΔ 380-420 VY	250-280 VΔ 440-480 VY	230 VΔ 400 VY	265 VΔ 460 VY	380-420 VΔ 660-690 VY	440-480 VΔ –	400 VΔ 690 VY	460 VΔ –	–	–	–	–	Any other rated voltage or frequency, 690V maximum
160-180	230 VΔ 400 VY	265 VΔ 460 VY	230 VΔ 400 VY	265 VΔ 460 VY	400 VΔ 690 VY	460 VΔ –	400 VΔ 690 VY	460 VΔ –	415 VY	415 VY	415 VΔ	415 VΔ	

7

General purpose brake motors

Technical data for single-speed motors with three phase AC brake

IP 55 – IC 411 – Insulation class F, temperature rise class B – Brake IP 23 S

Output kW	Motor type	Product code	Speed r/min	Torque rated TN Nm	braking TB Nm	TS/TN	K[1]	Efficiency 100%	75%	Power factor cos φ	Current IN A	IS/IN	c/h[2]	Moment of inertia J=1/4GD² kgm²	Weight Foot mounted kg
1000 r/min = 6 poles			**400 V 50 Hz**						**Basic design**						
0.09	**M3VRS 63 A**	3GVR 063 451-••C	910	0.95	2.1	2.1	7.5	47.1	42.5	0.56	0.51	2.1	7700	0.0003	5
0.12	**M3VRS 63 B**	3GVR 063 452-••C	860	1.27	1.8	2.2	5.76	56.0	53.5	0.55	0.56	2.4	7700	0.00037	5.5
0.12	**M3VRS 63 MB**	3GVR 063 462-••C	860	1.27	1.8	2.2	3.5	56.0	50.0	0.55	0.56	2.5	7700	0.00033	5
0.18	**M3VRS 71 A**	3GVR 073 451-••E	920	1.88	2.1	2.2	5.26	61.1	57.7	0.69	0.64	2.9	7500	0.00078	7
0.25	**M3VRS 71 B**	3GVR 073 452-••E	920	2.61	2.5	2.7	3.84	64.9	62.3	0.65	0.86	3.2	7500	0.00096	8
0.37	**M3VRS 80 A**	3GVR 083 451-••E	925	3.82	3.1	3.4	6.15	72.9	70.8	0.72	1.04	3.8	7000	0.00186	11
0.55	**M3VRS 80 B**	3GVR 083 452-••E	925	5.68	2.9	3.1	4.06	73.3	71.9	0.71	1.55	3.4	7000	0.0022	12
0.75	**M3ARS 90 S**	3GAR 093 451-••E	930	7.5	1.9	2.3	4.66	71.5	70.7	0.67	2.36	4.0	3800	0.0034	19
1.1	**M3ARS 90 L**	3GAR 093 452-••E	930	11	2.1	2.4	3.18	74.4	72.5	0.69	3.25	4.0	3900	0.0045	22
1.5	**M3ARS 100 L**	3GAR 103 451-••E	950	15	1.9	2.3	2.93	80.0	77.0	0.71	3.92	4.5	3300	0.0086	34
2.2	**M3ARS 112 M**	3GAR 113 451-••E	940	22.3	2.1	2.7	3.85	80.5	79.3	0.74	5.4	5.6	3200	0.015	40
3	**M3ARS 132 S**	3GAR 133 451-••E	960	29.8	2.0	2.6	4.36	84.5	82.7	0.75	6.9	6.1	2400	0.033	59
4	**M3ARS 132 MA**	3GAR 133 452-••E	960	39.7	2.0	2.8	3.27	85.5	83.1	0.78	8.7	7.1	1900	0.04	66
5.5	**M3ARS 132 MB**	3GAR 133 453-••E	955	55	2.2	2.8	2.36	86.0	85.0	0.78	11.9	6.9	1900	0.047	74
7.5	**M3ARS 160 M**	3GAR 163 451-••E	970	74	2.0	2.8	3.14	89.3	88.4	0.79	15.4	6.7	600	0.087	129
11	**M3ARS 160 L**	3GAR 163 452-••E	970	109	2.2	2.9	2.13	89.8	88.5	0.78	23	7.1	600	0.127	149
1000 r/min = 6 poles			**400 V 50 Hz**						**High-output design**						
0.15	**M3VRS 63 BB**	3GVR 063 453-••C	900	1.61	2.2	2.3	4.68	56.9	52.1	0.54	0.74	2.2	7700	0.00042	6
0.32	**M3VRS 71 C**	3GVR 073 453-••E	920	3.33	2.6	2.8	3.1	64.8	61.6	0.63	1.15	3.2	7500	0.00125	9
1.3 [3]	**M3ARS 90 LB**	3GAR 093 453-••E	910	13.5	1.9	2.2	2.59	69.0	69.0	0.71	3.85	4.0	3800	0.005	24
2.2 [3]	**M3ARS 100 LC**	3GAR 103 452-••E	940	22	1.9	2.3	2.0	77.0	72.8	0.71	5.9	4.5	3300	0.009	37
3 [3]	**M3ARS 112 MB**	3GAR 113 452-••E	935	30.6	2.0	2.7	2.81	80.0	79.9	0.76	7.2	5.5	3200	0.018	46
6.5 [3]	**M3ARS 132 MC**	3GAR 133 454-••E	960	64	2.0	2.7	2.01	85.0	84.5	0.75	14.8	6.6	2400	0.051	79
14 [3]	**M3ARS 160 LB**	3GAR 163 453-••E	960	139	2.7	3.1	1.65	89.1	84.5	0.77	29.5	7.6	1900	0.147	164

7

[1] Braking-torque ratio
[2] No-load (shaft-free) operations/hour
[3] Temperature rise class F.

The bullets in the product code indicate choice of mounting arrangement and voltage and frequency code, see below and ordering information page.

Code letters for supplementing product code for mounting arrangement:

Foot-mounted **A**
Flange-mounted, 1 flange **B** for frame sizes 63-100, 180; **E** for frame sizes 112-160.
Flange-mounted, 2 flanges **N** for frame sizes 90-132
Flange-mounted, small flange **C** for frame sizes 63-100

Code letters for supplementing product code for voltage and frequency (pos 13):

Motor size	S Motor 50 Hz	S Motor 60 Hz	S Brake 50 Hz	S Brake 60 Hz	D Motor 50 Hz	D Motor 60 Hz	D Brake 50 Hz	D Brake 60 Hz	G Motor 50 Hz	G Brake 50 Hz	H Motor 50 Hz	H Brake 50 Hz	X
63-132	220-240 VΔ 380-420 VY	250-280 VΔ 440-480 VY	230 VΔ 400 VY	265 VΔ 460 VY	380-420 VΔ 660-690 VY	440-480 VΔ –	400 VΔ 690 VY	460 VΔ –	–	–	–	–	Any other rated voltage or frequency, 690V maximum
160-180	230 VΔ 400 VY	265 VΔ 460 VY	230 VΔ 400 VY	265 VΔ 460 VY	400 VΔ 690 VY	460 VΔ –	400 VΔ 690 VY	460 VΔ –	415 VY	415 VY	415 VΔ	415 VΔ	

General purpose brake motors

Technical data for single-speed motors with three phase AC brake

IP 55 – IC 411 – Insulation class F, temperature rise class B – Brake IP 23 S

Output kW	Motor type	Product code	Speed r/min	Torque rated TN Nm	Torque braking TB Nm	Torque braking TS/TN	Torque braking K[1]	Efficiency 100%	Efficiency 75%	Power factor cos φ	Current IN A	Current IS/IN	c/h[2]	Moment of inertia J=1/4GD² kgm²	Weight Foot mounted kg
750 r/min = 8 poles			**400 V 50 Hz**						**Basic design**						
0.055	**M3VRS 63 B**	3GVR 064 451-••C	680	0.78	2.1	2.1	9.4	38.3	31.8	0.48	0.45	1.8	7700	0.00037	5.5
0.09	**M3VRS 71 A**	3GVR 074 451-••E	690	1.25	2.3	2.3	7.69	45.8	37.5	0.57	0.52	2.2	7500	0.00078	7
0.12	**M3VRS 71 B**	3GVR 074 452-••E	690	1.67	2.5	2.5	5.88	46.4	38.1	0.55	0.69	2.2	7500	0.00096	8
0.18	**M3VRS 80 A**	3GVR 084 451-••E	700	2.46	3.2	3.6	9.6	59.9	54.5	0.60	0.75	3.1	7500	0.0022	11
0.25	**M3VRS 80 B**	3GVR 084 452-••E	700	3.52	2.9	3.1	6.85	70.7	67.4	0.62	0.85	3.1	7500	0.00245	12
0.37	**M3ARS 90 S**	3GAR 094 451-••E	700	5.0	1.9	2.4	7.0	61.5	43.4	0.56	1.6	3.0	4100	0.0034	19
0.55	**M3ARS 90 L**	3GAR 094 452-••E	690	7.5	1.7	2.1	4.66	62.9	56.4	0.57	2.35	3.0	4100	0.0045	22
0.75	**M3ARS 100 LA**	3GAR 104 451-••E	700	10	2.1	2.7	4.4	72.0	63.6	0.59	2.55	3.5	3600	0.0073	31
1.1	**M3ARS 100 LB**	3GAR 104 452-••E	700	15	2.1	2.7	2.93	73.0	68.8	0.64	3.35	3.5	3700	0.0086	34
1.5	**M3ARS 112 M**	3GAR 114 451-••E	695	20.6	1.9	2.4	4.17	74.5	75.9	0.65	4.5	4.1	3600	0.016	41
2.2	**M3ARS 132 S**	3GAR 134 451-••E	720	29.2	1.6	2.5	4.45	80.5	77.8	0.67	5.9	5.3	3000	0.04	66
3	**M3ARS 132 M**	3GAR 134 452-••E	720	39.8	1.8	2.5	3.26	82.0	79.2	0.68	7.8	5.5	2600	0.047	73
4	**M3ARS 160 MA**	3GAR 164 451-••E	715	54	2.1	2.4	4.39	84.1	81.1	0.69	10	5.2	600	0.11	139
5.5	**M3ARS 160 M**	3GAR 164 452-••E	710	74	2.4	2.6	3.17	84.7	75.0	0.70	13.4	5.4	600	0.11	139
7.5	**M3ARS 160 L**	3GAR 164 453-••E	715	100	2.4	2.8	2.31	86.3	82.4	0.70	18.1	5.4	600	0.127	154

[1] Braking-torque ratio
[2] No-load (shaft-free) operations/hour

The bullets in the product code indicate choice of mounting arrangement and voltage and frequency code, see below and ordering information page.

Code letters for supplementing product code for mounting arrangement:

Foot-mounted **A**
Flange-mounted, 1 flange **B** for frame sizes 63-100, 180; **E** for frame sizes 112-160.
Flange-mounted, 2 flanges **N** for frame sizes 90-132
Flange-mounted, small flange **C** for frame sizes 63-100

Code letters for supplementing product code for voltage and frequency (pos 13):

Motor size	S Motor 50 Hz	S Motor 60 Hz	S Brake 50 Hz	S Brake 60 Hz	D Motor 50 Hz	D Motor 60 Hz	D Brake 50 Hz	D Brake 60 Hz	G Motor 50 Hz	G Brake 50 Hz	H Motor 50 Hz	H Brake 50 Hz	X
63-132	220-240 VΔ 380-420 VY	250-280 VΔ 440-480 VY	230 VΔ 400 VY	265 VΔ 460 VY	380-420 VΔ 660-690 VY	440-480 VΔ –	400 VΔ 690 VY	460 VΔ –	–	–	–	–	Any other rated voltage or frequency, 690V maximum
160-180	230 VΔ 400 VY	265 VΔ 460 VY	230 VΔ 400 VY	265 VΔ 460 VY	400 VΔ 690 VY	460 VΔ –	400 VΔ 690 VY	460 VΔ –	415 VY	415 VY	415 VΔ	415 VΔ	

General purpose brake motors

Technical data for two-speed motors with three phase AC brake

IP 55 – IC 411 – Insulation class F, temperature rise class F – Brake IP 23 S

Output kW	Motor type	Product code	Speed r/min	Torque rated TN Nm	Torque braking TB Nm	TS/TN	K[1]	Efficiency %	Power factor cos φ	Current IN	Current IS/IN A	Moment of inertia J=1/4GD² kgm²	Weight IM 1001 kg
3000/1500 r/min = 2-4 poles			**400 V 50 Hz**					**Constant torque, two separate windings**					
1.1/0.55	**M3ARS 90 S**	3GAR 098 451-••E	2900/1450	3.6/3.6	35	1.4/1.5	7.1/7.1	74/62	0.85/0.64	2.5/2	5.1/3.6	0,0019	20
1.5/0.75	**M3ARS 90 L**	3GAR 098 452-••E	2900/1450	4.9/4.9	35	1.5/1.5	9.7/9.7	77/70	0.87/0.67	3.3/2.4	5.7/4.1	0,0024	23
2/1	**M3ARS 100 L**	3GAR 108 451-••E	2900/1460	6.5/6.5	44	1.9/1.4	7.7/7.7	76/67	0.89/0.66	4.3/3.3	6.2/4	0,0041	32
2.6/1.3	**M3ARS 112 M**	3GAR 118 451-••E	2900/1460	8.6/8.5	86	1.6/1.6	10/9.9	80/75	0.92/0.72	5.1/3.5	6.4/5	0,012	45
4.4/2.2	**M3ARS 132 SB**	3GAR 138 451-••E	2925/1450	14.4/14.5	130	2/1.3	8.1/8.1	81/74	0.86/0.73	9.1/5.9	7.3/4.5	0,016	55
5.6/2.8	**M3ARS 132 M**	3GAR 138 452-••E	2885/1440	18.5/18.6	130	1.8/1.4	10.4/10	82/77	0.93/0.75	10.6/7	6.7/5	0,022	76
3000/1500 r/min = 2-4 poles			**400 V 50 Hz**					**Constant torque, Dahlander connection**					
0.2/0.15	**M3VRS 63 A**	3GVR 068 451-••C	2800/1400	0.68/1.02	7.5	2.1/2	11/7.4	63/54	0.7/0.63	0.65/0.65	3.6/2.8	0.00019	5
0.3/0.2	**M3VRS 63 B**	3GVR 068 452-••C	2740/1370	1.05/1.4	7.5	1.7/2.1	7.1/5.4	59/55	0.78/0.63	0.95/0.85	2.8/2.8	0.00026	5.5
0.37/0.25	**M3VRS 71 A**	3GVR 078 451-••E	2700/1390	1.3/1.72	10	1.9/1.5	9.2/7	64/60	0.89/0.79	0.95/0.7	3.3/3.1	0.00066	7
0.48/0.31	**M3VRS 71 B**	3GVR 078 452-••E	2780/1400	1.66/2.15	10	1.4/2	7.1/5.6	68/68	0.91/0.76	1.2/0.9	3.6/4	0.00089	8
0.55/0.37	**M3VRS 71 C**	3GVR 078 453-••E	2800/1400	1.87/2.52	10	1.8/1.9	6.4/4.8	66/64	0.8/0.65	1.5/1.2	4.7/4.3	0.0011	8.5
0.63/0.5	**M3VRS 80 A**	3GVR 088 451-••E	2690/1400	2.25/3.42	24	1.8/1.9	7.6/5.5	66/67	0.87/0.79	1.6/1.35	3.6/4.2	0.0013	11
0.85/0.65	**M3VRS 80 B**	3GVR 088 452-••E	2725/1405	2.99/4.43	24	1.9/2	5.4/3.6	70/70	0.88/0.8	2/1.7	4/4.4	0.0016	12.5
1.1/0.8	**M3VRS 80 C**	3GVR 088 453-••E	2730/1410	3.8/5.38	24	2/2	4.7/3.3	72/71	0.88/0.79	2.55/2.05	4.2/4.7	0.002	13
1.3/1	**M3ARS 90 S**	3GAR 098 453-••E	2730/1400	4.5/6.8	35	2/1.5	7.8/5.1	71/71	0.88/0.8	3.1/2.6	3.9/3.8	0.0032	20
1.9/1.5	**M3ARS 90 L**	3GAR 098 454-••E	2820/1420	6.4/20.1	35	2.8/2		74/75	0.82/0.76	4.4/3.9	5.1/4.4	0.0043	23
2.5/2.1	**M3ARS 100 LA**	3GAR 108 452-••E	2800/1430	8.5/20.1	44	2.2/1.6	5.9/3.6	68/76	0.88/0.81	6/5	4.8/4.4	0.0069	32
3.4/2.5	**M3ARS 100 LB**	3GAR 108 453-••E	2810/1430	11.5/18	44	2.2/1.9	4.3/2.7	78/80	0.88/0.85	7.2/5.9	5.3/5.4	0.0082	35
4.26	**M3ARS 112 M**	3GAR 118 452-••E	2865/1430	13.3/17.4	86	1.8/2.3	10/9.9	82/77	0.93/0.76	7.6/6.5	6.3/6.2	0.012	45
6.3/4.4	**M3ARS 132 SA**	3GAR 138 461-••E	2895/1445	20.8/29	130	1.7/1.6	7.2/5.2	85/84	0.94/0.8	11.4/9.5	6.5/5.7	0.0155	58
4.7/3.1	**M3ARS 132 SB**	3GAR 138 453-••E	2820/1420	15.9/20.8	130	1.8/2.2	10.4/10	79/77	0.92/0.76	9.2/7.7	5.5/5.7	0.016	55
8/6.2	**M3ARS 132 SC**	3GAR 138 462-••E	2910/1440	26.2/41.1	130	1.9/1.6	6.9/3.6	87/85	0.95/0.83	14/12.7	7.8/5.6	0.0215	78
7.2/4.8	**M3ARS 132 M**	3GAR 138 454-••E	2870/1435	24/31.9	130	2.4/2.5	6.3/4.7	84/81	0.92/0.76	13.3/11.5	7.1/6.2	0.022	76
9.6/7	**M3ARS 132 MD**	3GAR 138 453-••E	2900/1440	31.6/46.4	130	1.8/1.7	4.7/3.2	87/85	0.95/0.85	16.8/14.1	7.6/5.9	0.026	85
12.5/9	**M3ARS 160 M**	3GAR 168 454-••E	2890/1440	41/60	200	1.4/1.8	5.6/3.8	85.5/85.5	0.93/0.8	22.5/19	5.2/4.6	0.054	129
15/10.5	**M3ARS 160 L**	3GAR 168 455-••E	2900/1445	49/69	200	1.6/2.1	4.7/3.3	87/86	0.93/0.77	27/23	5.8/4.9	0.057	139
1500/1000 r/min = 4/6 poles			**400 V 50 Hz**					**Constant torque, two separate windings**					
0.11/0.08	**M3VRS 63 B**	3GVR 068 453-••C	1390/860	0.75/0.88	7.5	1.4/1.8	10/8.5	40/25	0.7/0.72	0.55/0.62	2.5/1.8	0.00026	5.5
0.3/0.2	**M3VRS 71 A**	3GVR 078 454-••E	1390/900	1.37/0.79	10	1.1/1.05	15.2/8.8	51/40	0.82/0.72	0.7/0.5	2.8/2	0.00066	7
0.37/0.22	**M3VRS 71 B**	3GVR 078 455-••E	1380/900	2.07/1.91	10	1/1.1	6.3/5.8	58/40	0.83/0.8	0.9/0.8	2.7/1.9	0.00089	8
0.43/0.28	**M3VRS 80 A**	3GVR 088 454-••E	1380/910	2.54/3.02	24	1.5/1.4	7.1/6	60/54	0.85/0.81	1.4/1.2	3.1/2.9	0.0019	12
0.58/0.37	**M3VRS 80 B**	3GVR 088 455-••E	1390/920	4/3.85	24	1.5/1.5	4/3.5	63/58	0.85/0.8	1.6/1.15	3.3/3.2	0.0022	12.5
0.8/0.5	**M3ARS 90 S**	3GAR 098 455-••E	1430/940	5.3/5	35	1.5/1.4	4.6/4.4	68/57	0.8/0.66	2.2/2	3.9/2.8	0.0032	20
1.2/0.75	**M3ARS 90 L**	3GAR 098 456-••E	1430/940	8/7.6	35	1.7/1.5	7/6.6	73/63	0.81/0.67	3/2.6	4.4/3.1	0.0043	23
1.5/0.9	**M3ARS 100 LA**	3GAR 108 454-••E	1440/960	9.9/8.9	44	1.5/1.5	5.6/5.1	75/69	0.84/0.65	3.5/3	4.7/3.8	0.0069	32
1.8/1.1	**M3ARS 100 LB**	3GAR 108 455-••E	1460/960	11/11	44	2.1/1.6	4.5/4.5	77/70	0.78/0.64	4.4/3.6	5.8/3.9	0.0082	35
2.6/1.7	**M3ARS 112 M**	3GAR 118 453-••E	1445/960	17.2/16.9	86	1.5/1.5	5/4.9	80/70	0.85/0.76	5.5/4.4	5.9/5.2	0.018	45
3.3/2.2	**M3ARS 132 S**	3GAR 138 455-••E	1470/980	21.4/21.4	130	1.4/1.2	4.2/4.2	82/76	0.8/0.65	7.1/6.4	6.8/4.6	0,038	61
3.3/2.2	**M3ARS 132 M**	3GAR 138 456-••E	1470/980	29.2/29.2	130	1.4/1.5	7/7	82/77	0.81/0.7	9.8/8	7.2/5.6	0,048	79
5.5/3.7	**M3ARS 132 MD**	3GAR 138 464-••E	1460/960	36/36.8	130	1.9/1.8	5.1/5.1	85/81	0.88/0.8	10.7/8.3	8/6.3	0,036	84
7.5/5.5	**M3ARS 160 M**	3GAR 168 456-••E	1465/965	49/54	230	2.1/1.8	2.9/2.7	85.5/80.5	0.83/0.77	15.5/13	7.1/4.7	0,089	129
11.5/8.5	**M3ARS 160 L**	3GAR 168 457-••E	1465/965	75/84	230	2.1/1.8	3.1/2.7	86.5/82.5	0.84/0.76	23/19.5	7/4.9	0,119	139

[1] Braking-torque ratio

General purpose brake motors

Technical data for two-speed motors with three phase AC brake

IP 55 – IC 411 – Insulation class F, temperature rise class F – Brake IP 23 S

Output kW	Motor type	Product code	Speed r/min	Torque rated TN Nm	Torque braking TB Nm	TS/TN	K[1)]	Efficiency %	Power factor cos φ	Current IN	Current IS/IN A	Moment of inertia J=1/4GD² kgm²	Weight IM 1001 kg
3000/750 r/min = 2/8 poles			**400 V 50 Hz**					**Constant torque, two separate windings**					
0.25/0.06	**M3VRS 71 A**	3GVR 078 458-••E	078 458-E	2760/660	10	1/1.3	14/14	52/36	0.94/0.7	0.75/0.35	2.9/1.9	0,00066	7
0.37/0.09	**M3VRS 71 B**	3GVR 078 459-••E	078 459-E	2800/660	10	1/1.6	9.5/9.2	68/41	0.87/0.65	0.9/0.5	2.8/2	0,00089	8
0.5/0.12	**M3VRS 80 A**	3GVR 088 459-••E	088 459-E	2730/700	24	1.3/2	10.9/9.6	60/38	0.87/0.58	1.4/0.8	3.2/2.3	0,0013	12,5
0.66/0.15	**M3VRS 80 B**	3GVR 088 460-••E	088 460-E	2780/700	24	1.4/2.2	7.3/7.1	65/40	0.87/0.58	1.65/0.95	3.8/2.5	0,0016	13
0.75/0.18	**M3ARS 90 LA**	3GAR 098 461-••E	098 461-E	2875/720	35	2.3/1.3	14/14	71.2/46.3	0.8/0.51	1.9/1.1	5.7/2.4	0,0043	23
1.3/0.33	**M3ARS 90 LB**	3GAR 098 462-••E	098 462-E	2780/690	35	1.8/1.2	8/8	71/52	0.92/0.62	2.9/1.5	4.5/2.3	0,0043	23
1.8/0.5	**M3ARS 100 LB**	3GAR 108 460-••E	108 460-E	2860/705	44	1.7/1.3	8.3/7.4	80/54	0.93/0.64	3.5/2.1	5.3/2.6	0,0082	35
2.2/0.59	**M3ARS 112 MC**	3GAR 118 456-••E	118 456-E	2900/720	86	2.4/1.6	11.8/11	78/62	0.87/0.55	4.9/2.5	7/3.5	0,015	42
3.3/0.95	**M3ARS 132 SA**	3GAR 138 465-••E	138 465-E	2940/730	130	2.6/1.2	14/12	81/72	0.95/0.52	6.2/3.7	9.5/4.3	0,0215	65
4.4/1.3	**M3ARS 132 MC**	3GAR 138 466-••E	138 466-E	2920/725	130	2.2/1.3	10.7/8.8	82/74	0.94/0.62	8.3/4.1	8.6/4	0,03	77
1500/750 r/min = 4/8 poles			**400 V 50 Hz**					**Constant torque, two separate windings**					
0.55/0.25	**M3ARS 90 S**	3GAR 098 457-••E	1450/700	3.6/3.4	35	1.3/1.4	10.3/9.7	62/51	0.78/0.59	1.9/1.2	4.2/2.3	0.0032	20
0.75/0.37	**M3ARS 90 L**	3GAR 098 458-••E	1450/700	4.9/5	35	1.4/1.5	7.1/7	66/57	0.75/0.57	2.2/1.7	4.1/2.5	0.0043	23
1.1/0.55	**M3ARS 100 LA**	3GAR 108 456-••E	1460/710	7.2/7.4	44	1.2/1.2	6.9/6.8	68/62	0.77/0.61	3.1/2.2	4.2/2.6	0.0069	32
1.5/0.75	**M3ARS 100 LB**	3GAR 108 457-••E	1440/700	9.8/10	44	1.3/1.2	5.1/5	72/60	0.82/0.6	3.7/2.9	4.6/2.7	0.0082	35
1.8/0.9	**M3ARS 112 M**	3GAR 118 454-••E	1460/715	11.7/12	86	1.2/1.6	7.3/7.1	77/65	0.76/0.66	4.4/3	6.5/4	0.018	45
2.5/1.3	**M3ARS 132 S**	3GAR 138 457-••E	1480/735	16.2/17	130	1.6/1.4	9.3/8.8	80/67	0.79/0.56	5.8/6	6/3.7	0.038	61
3.3/1.7	**M3ARS 132 M**	3GAR 138 458-••E	1470/725	21.4/22.4	130	1.6/1.4	7/6.7	81/71	0.79/0.58	7.5/6	7/4.2	0.048	79
1500/750 r/min = 4-8 poles			**400 V 50 Hz**					**Constant torque, Dahlander connection**					
0.11/0.06	**M3VRS 63 B**	3GVR 068 454-••C	1390/660	0.75/0.87	7.5	1.6/2.5	10/8.6	54/33	0.6/0.49	0.5/0.55	3/1.7	0.00026	5.5
0.18/0.11	**M3VRS 71 A**	3GVR 078 456-••E	1380/680	1.24/1.54	10	1.9/2.2	9.7/7.8	54/37	0.7/0.53	0.7/0.8	3.2/2.5	0.00066	7
0.3/0.15	**M3VRS 71 B**	3GVR 078 457-••E	1400/700	2.05/2.05	10	2/2.5	5.9/5.9	60/47	0.74/0.51	0.9/0.9	3.2/2.6	0.00089	8
0.45/0.25	**M3VRS 80 A**	3GVR 088 456-••E	1380/700	3.12/3.42	24	1.7/2.1	6.5/6	65/48	0.87/0.58	1.15/1.3	3.5/2.7	0.0019	11
0.63/0.33	**M3VRS 80 B**	3GVR 088 457-••E	1380/705	4.37/4.48	24	1.7/2.2	4/3.9	67/50	0.88/0.56	1.55/1.7	3.5/2.8	0.0022	12
0.75/0.37	**M3VRS 80 C**	3GVR 088 458-••E	1390/710	5.16/4.98	24	1.9/2.5	3.6/3.5	70/52	0.86/0.51	1.8/2	3.9/2.9	0.0025	12.5
0.7/0.37	**M3ARS 90 S**	3GAR 098 459-••E	1420/700	4.7/5.1	35	1.6/1.6	7.4/6.9	72/50	0.8/0.57	1.8/1.9	4.4/2.3	0.0032	20
1.1/0.55	**M3ARS 90 L**	3GAR 098 460-••E	1390/685	7.4/7.5	35	1.4/1.5	4.7/4.7	70/55	0.84/0.58	2.6/2.6	4.1/2.3	0.0043	23
1.5/0.75	**M3ARS 100 LA**	3GAR 108 458-••E	1440/710	10/10	44	1.4/1.5	5/5	76/62	0.85/0.57	3.4/3.2	4.6/2.8	0.0069	32
2/0.95	**M3ARS 100 LB**	3GAR 108 459-••E	1440/710	13/12	44	1.4/1.6	4.2/3.8	78/64	0.86/0.55	4.4/4	4.8/2.9	0.0082	35
2.5/1.5	**M3ARS 112 M**	3GAR 118 455-••E	1410/705	16.9/20.3	86	1.4/1.5	5/4.2	78/67	0.9/0.66	5.1/4.9	5.5/4.1	0.018	45
3.8/1.9	**M3ARS 132 S**	3GAR 138 459-••E	1450/730	25/24.9	130	1.4/1.3	6/6	82/70	0.84/0.52	7.7/7.6	5.6/3.7	0.038	61
5/2.5	**M3ARS 132 M**	3GAR 138 460-••E	1455/730	32.8/32.7	130	1.7/2	4.6/4.6	85/73	0.88/0.52	9.6/9.6	6.9/4.8	0.048	79
8/4.5	**M3ARS 160 M**	3GAR 168 460-••E	1440/730	53/59	230	1.3/1.4	4.3/3.9	84.5/79.5	0.86/0.6	16/13.5	4.5/3.4	0.089	129
12/7	**M3ARS 160 L**	3GAR 168 461-••E	1445/730	79/92	230	1.5/1.4	2.9/2.5	86.5/81	0.87/0.59	23/21	5/3.5	0.119	139

[1)] Braking-torque ratio

The bullets in the product code indicate choice of mounting arrangement and voltage and frequency code, see below and ordering information page.

Code letters for supplementing product code for mounting arrangement (pos 12):

Foot-mounted **A**
Flange-mounted, 1 flange **B** for frame sizes 63-100, 180; **E** for frame sizes 112-160.
Flange-mounted, 2 flanges **N** for frame sizes 90-132
Flange-mounted, small flange **C** for frame sizes 63-100

Code letters for supplementing product code for voltage and frequency (pos 13):

Motor size	A Motor 50 Hz	A Brake 50 Hz	B Motor 50 Hz	B Brake 50 Hz	S Motor 50 Hz	S Brake 50 Hz	D Motor 50 Hz	D Brake 50 Hz
63-132	–	–	–	–	220-230 V	230 VΔ	380-400 V	400 VΔ
160	220 V	220 VΔ	380 V	380 VΔ	230 V	230 VΔ	400 V	400 VΔ

Motor size	E Motor 50 Hz	E Brake 50 Hz	H Motor 50 Hz	H Brake 50 Hz	X
63-132	500 V	500 VΔ	415 V	415 VΔ	Any other rated voltage or
160	500 V	500 VΔ	415 V	415 VΔ	frequency, 690 V maximum

7

General purpose brake motors - Variant codes

Code	Variant	M3VRF/S			M3ARF/S					
		63	71	80	90	100	112	132	160	180
	Brakes									
086	Separate brake supply	M	M	M	M	M	M	M	M	M
087	Brake with reduced torque, torque range 60%-33% of nominal torque.	NA	P	P	P	P	P	P	P	p
088	Hand release	M	S	S	S	S	S	S	S	S
213	Brake with increased degree of protection. Rubber ring and V-ring for IP55 protection.	M	M	M	M	M	M	M	M	M
285	Reconnection of brake for separate dc supply at 24 V.	R	M	M	M	M	M	M	M	M
288	Brake motor with voltage code S for the motor and separate supply of the brake for voltage corresponding to code D.	R	M	M	M	M	M	M	M	M
289	Brake motor with voltage code D for the motor and separate supply of the brake for voltage corresponding to code S.	R	M	M	M	M	M	M	M	M
290	Brake motor with a.c. brake, change into d.c. brake keeping the voltage code.	R	M	M	M	M	M	M	M	M
291	Brake motor with d.c. brake, change into a.c. brake keeping the voltage code.	R	M	M	M	M	M	M	M	M
	Special voltage									
209	Non-standard voltage or frequency (special winding) Different brake coil (e.g. 25 Vdc), max. 500 Vac.	R	R	R	P	P	P	P	P	P
	Protection									
005	Protective roof, for vertical mounting with shaft end downwards.	M	M	M	M	M	M	M	M	M

For other variant codes please see section for standard aluminum motors or consult ABB.

S = Included as standard
P = New manufacture only.
M = On modification of a stocked motor or on new manufacture, the number per order may be limited.
R = On request.
NA = Not applicable.

7

Brake rating plates

The brake rating plates have the following arrangement:

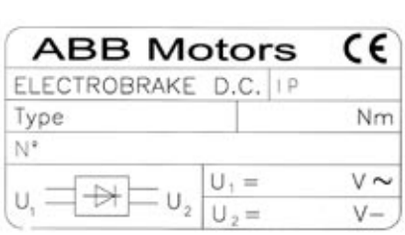

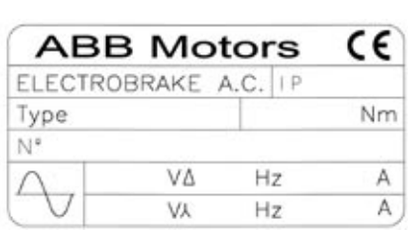

Dimension drawings

IM B3 (IM 1001)

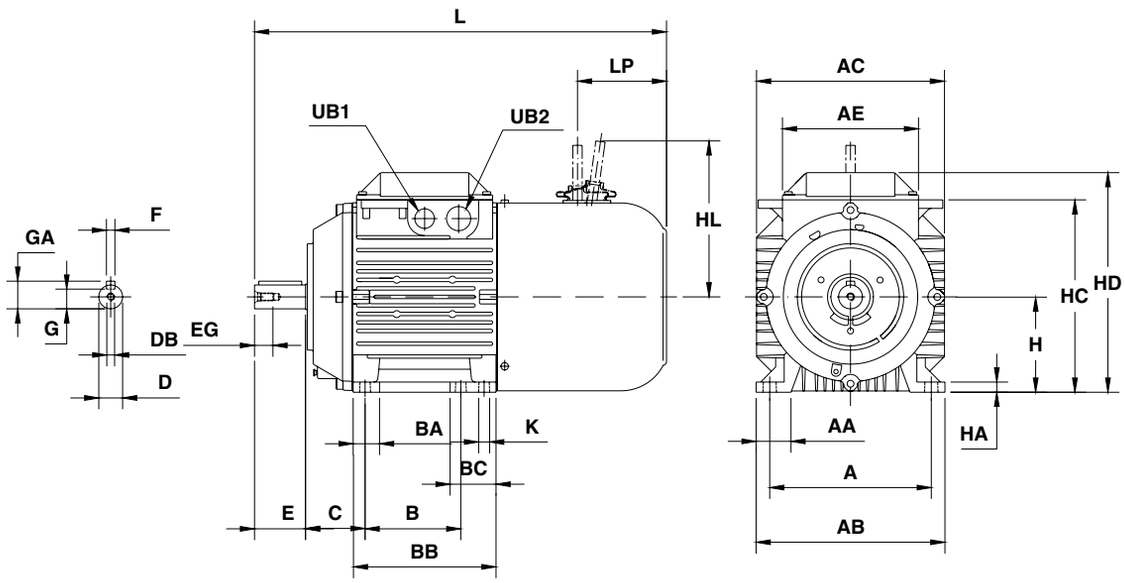

Motor size	A	AA	AB	AC	AE	B	BA	BB	BC	C	D	DB	E	EG
63 A/B	100	26	120	123	85	80	21	96	21	40	11	M4	23	10
63 MA/MB	100	35	115	123	94	80	25	96	25	40	11	M4	23	10
71	112	24	136	139	85	90	31	110	31	45	14	M5	30	13
80	125	28	154	156	97	100	34	125	34	50	19	M6	40	16
90S	140	27	170	177	110	100	30	125	30	56	24	M8	50	19
90 L	140	27	170	177	110	125	30	150	30	56	24	M8	50	19
100 L	160	32	197	197	110	140	34	172	34	63	28	M10	60	22
112 M	190	41	222	221	160	140	31	168	31	70	28	M10	60	22
132 S	216	47	262	261	160	140	40	212	76	89	38	M12	80	28
132 M	216	47	262	261	160	178	40	212	76	89	38	M12	80	28
160 M	254	56	310	314	210	210	55	287.5	86	108	42	M16	110	36
160 L	254	56	310	314	210	254	55	287.5	86	108	42	M16	110	36
180	279	65.5	340	314	210	241	91	329	91	121	48	M16	110	36

Motor size	F	GA	H	HA	HC	HD	HL	K	L	LP	UB1	UB2
63 A/B	4	12.5	63	10	-	180	107	7	270	66	M16	Pg11
63 MA/MB	4	12.5	63	6	-	188	-	7	277	-	M20	M20
71	5	16	71	9	-	176	114	7	316	76	M20	Pg16
80	6	21.5	80	10	-	190	124	10	360	70	M20	Pg16
90S	8	27	90	10	177	217	161	10	370	70	M20	M25
90 L	8	27	90	10	177	217	161	10	395	70	M20	M25
100 L	8	31	100	12	197	237	173	12	453	105	M20	M25
112 M	8	31	112	12	226	258	184	12	487	105	M20	M25
132 S	10	41	132	14	264	296	225	12	606	119	M20	M25
132 M	10	41	132	14	264	296	225	12	606	119	M20	M25
160 M	12	45	160	20	325	369	253	15	782	139	M40	M40
160 L	12	45	160	20	325	369	253	15	782	139	M40	M40
180	14	51.5	180	20	345	389	253	15	782	139	M40	M40

Tolerances:

D ISO j6 (≤ 28 Ø)
D ISO k6 (38-42 Ø)
F ISO h9
H + 0, - 0.5

Above table gives the main dimensions in mm.

For detailed drawings please see our web-pages 'www.abb.com/motors&drives' or contact us.

IM B5 (IM 3001), IM V1 (IM 3011), IM B14 (IM 3601)

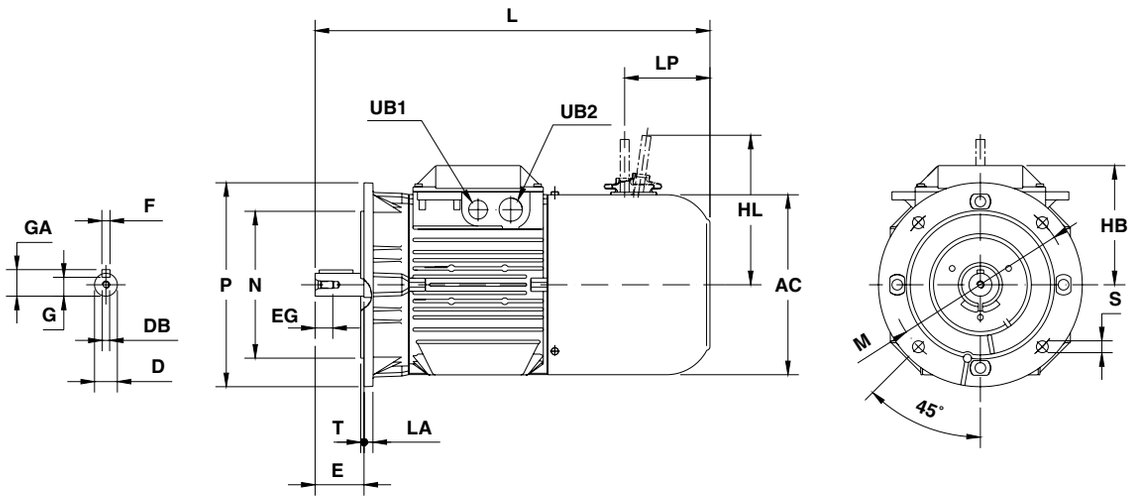

IM B5 (IM 3001)

Motor size	AC	D	DB	E	EG	F	GA	HB	HL	L	LP	UB1	UB2
63 A/B	123	11	M4	23	10	4	12.5	117	107	270	66	M16	Pg 11
63 MA/MB	123	11	M4	23	10	4	12.5	125	—	277	—	M20	M20
71	139	14	M5	30	13	5	16	105	114	316	76	M20	Pg 16
80	156	19	M6	40	16	6	21.5	110	124	360	70	M20	Pg16
90S	178	24	M8	50	19	8	27	127	161	370	70	M20	M25
90 L	178	24	M8	50	19	8	27	127	161	395	70	M20	M25
100 L	198	28	M10	60	22	8	31	137	173	453	105	M20	M25
112 M	223	28	M10	60	22	8	31	146	184	487	105	M20	M25
132 S,M	264	38	M12	80	28	10	41	164	225	606	119	M20	M25
160 M,L	317	42	M16	110	36	12	45	209	253	782	139	M40	M40
180	317	48	M16	110	36	14	51.5	209	253	782	139	M40	M40

IM B5 (IM 3001)

Motor size	IEC flange	LA	M	N	P	S [1]	T
63 A/B	FF115	10	115	95	140	M8	3
63 MA/MB	FF115	6.5	115	95	140	M8	3
71	FF130	10	130	110	160	M8	3.5
80	FF165	12	165	130	200	M10	3.5
90	FF165	11	165	130	200	M10	3.5
100	FF215	11	215	180	250	M12	4
112	FF215	11	215	180	250	M12	4
132	FF265	12	265	230	300	M12	4
160	FF265	12	265	230	300	M12	4
160 [2]	FF300	20	300	250	350	M16	5
180	FF300	20	300	250	350	M16	5

IM B14 (IM 3601)

Motor size	IEC flange	LA	M	N	P	S	T
63 A/B	FT75	10	75	60	90	M5	2.5
63 MA/MB	FT75	10	75	60	90	M5	3
71	FT85	10	85	70	105	M6	2.5
80	FT100	10	100	80	120	M6	3
90	FT115	14	115	95	140	M8	3
100	FT130	16	130	110	160	M8	3.5
112 [3]	FT130	9.5	130	110	160	M8	3.5
132	FT165	14.5	165	130	200	M8	3.5

Tolerances:

D ISO j6 (≤ 28 Ø)
D ISO k6 (38-42 Ø)
F ISO h9

[1] Clearance holes for bolt.
[2] Optional for frame size 160.
[3] Two pieces modular flange.

Modular flanges:
Brake motors sizes 71-132 can be supplied with several non standard modular flange dimensions

Above table gives the main dimensions in mm.
For detailed drawings please see our web-pages 'www.abb.com/motors&drives' or contact us.

General purpose brake motors in brief, basic design

Motor size		63 A/B BB	63 MA/MB	71	80	90	100	112	132	160	180
Stator and feet	Material	Die-cast aluminum alloy. Loose feet in sizes 63MA/MB-100 and 180; feet integrated with stator in sizes 63A/B, 112-160.									
	Paint colour shade Paint	Munsell blue 8B 4.5/3.25 / NCS 4822 BO5G / RAL 5014 Exoxy polyester powder paint, ≥ 30 µm.						2-pack polyurethane paint, ≥20µm.			
Bearing end shields	Material	Die-cast aluminum alloy.									
	Paint colour shade Paint	Munsell blue 8B 4.5/3.25 / NCS 4822 BO5G Epoxy polyester powder paint, ≥ 30 µm.						2-pack polyurethane paint, ≥20µm			
Flanges	Material	Die-cast aluminum alloy.						Cast iron			
	Paint colour shade Paint	Munsell blue 8B 4.5/3.25 / NCS 4822 BO5G / RAL 5014 Epoxy polyester powder paint, ≥ 30 µm.						2-pack polyurethane paint, ≥20µm			
Bearings	D-end	6202-2Z/C3	6201-2Z	6203-2Z/C3	6204-2Z/C3	6205-2Z/C3	6306-2Z/C3	6206-2Z/C3	6208-2Z/C3	6309-2Z/C3	6310-2Z/C3
	N-end	6202-2Z/C3	6201-2Z	6203-2Z/C3	6204-2Z/C3	6205-2Z/C3	6206-2Z/C3	6206-2Z/C3	6208-2Z/C3	6209-2Z/C3	6209-2Z/C3
Axially locked bearings	System	Inner bearing circlip, on request. In sizes 71-80 mounting large flange.				Inner bearing cover at D-end.					
Bearing seals	D-end	V-ring	Radial seal	V-ring							
	N-end	V-ring	-	V-ring							
Lubrication		Permanently lubricated bearings. Grease for bearing temperatures -40…+160°C.									
Terminal box	Material Surface treatment Srews	Die-cast aluminum alloy. Similar to stator. Steel 5 G, chromated.									
Connections	Knock-out openings	1 x M16 + Pg11	2xM20 +1xM12	2xM20 + Pg16		2 x(M25 + M20)		2 x(M25 + M20)		2 x (M40 + M16)	
	Max Cu area, mm^2	2.5		4		6		10		35	
	Terminal box	Screw terminal, 6 terminals.						Cable lugs, 6 terminals.			
Fan	Material	Polypropylene. Reinforced with 20% glass fibre.									
Fan cover	Material	Steel.									
Stator winding	Material Impregnation Insulation class	Copper. Polyester varnish. Tropicallised. Insulation class F. Temperature rise class B, unless otherwise stated.									
Stator winding temperature sensors		Optional.									
Rotor winding	Material	Die-cast aluminum.									
Balancing method		Half key balancing.									
Key ways		Closed key way.									
Enclosure		Motor, terminal box and brake electrical components: IP 55. Brake mechanical components: IP23 S (IP 55 optional).									
Cooling method		IC 411.									

7

7

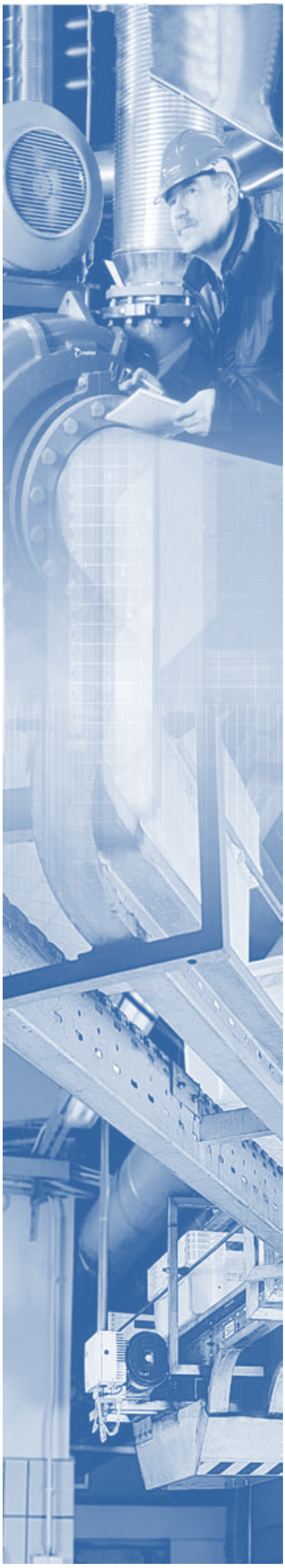

Single Phase Motors

Totally enclosed squirrel cage single phase low voltage motors, Sizes 56 - 100, 0.065 to 2.2 kW

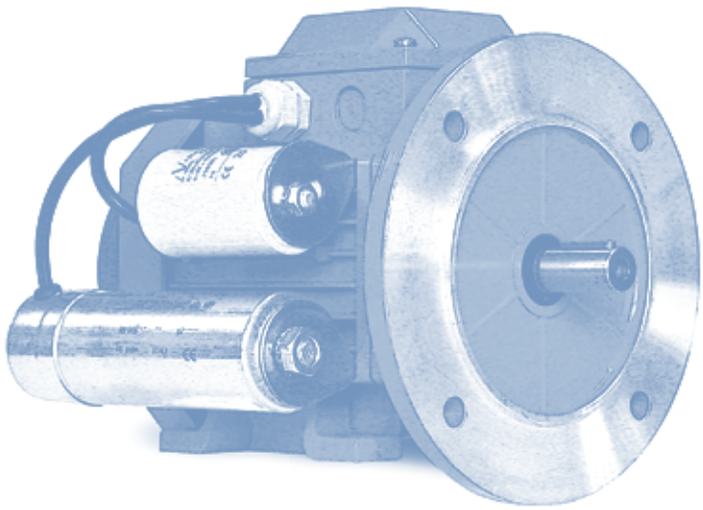

www.abb.com/motor&drives
> Motors
> Low voltage motors
> General purpose motors

Mechanical design 220
Ordering information 226
Technical data 227
Rating plates 229
Variant codes 230
Dimension drawings 233
Single phase motors in brief 235

8

In many respects single phase motors have the same properties as three phase motors, and mechanically they meet the same standards. There are several types of single phase motors (CSR, PSC and PSC-reg.).

Each type has its benefits and limitations, as described in the section below.
Single phase motors are used in many industries and for many purposes.

Description and application

CSR

Starting and run capacitor

Single phase motor with attached run capacitor, starting capacitor and electronic start relay mounted in the terminal box.

The electronic start relay connects the starting capacitor instantly when the motor starts, and cuts out when the motor has reached its break-down torque. The connec-tion time is limited to max. 2 sec., after which the starting capacitor is disconnected, regardless of whether the motor has reached its breakdown torque. The starter relay cannot reconnect until the mains voltage to the motor has been disconnected; this protects the starting capacitor and ensures that the motor can be protected with a thermal motor line circuit breaker.

The CSR motor with a starting torque of 140 - 160% is suitable for applications that require a high starting torque, such as compressors, hydraulic pumps that start with back pressure and centrifugal pumps where the shaft seal requires a high breakaway torque.

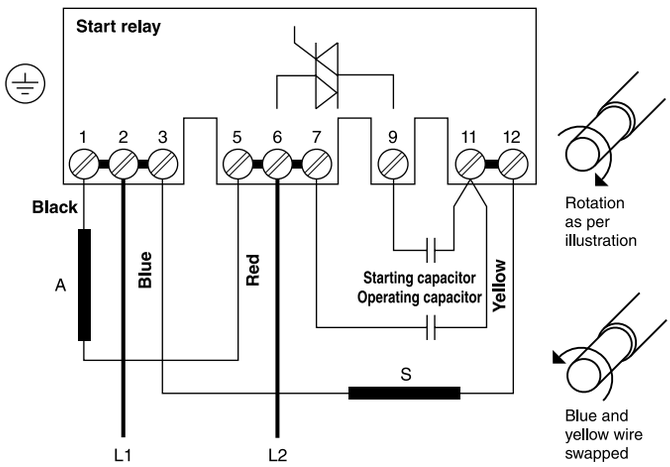

CSR model with electronic start relay.

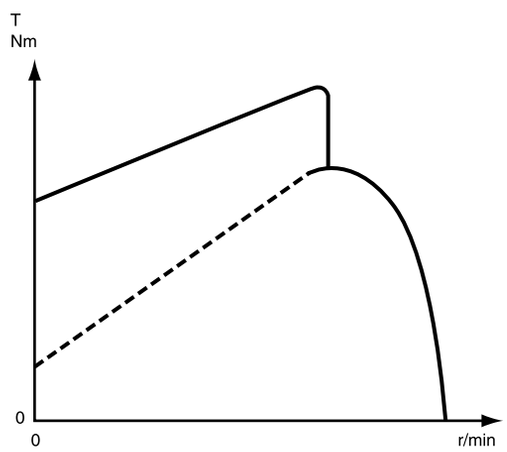

Torque curve for CSR motor.

8

PSC

Run capacitor

Single-phase motor with attached run capacitor. The starting torque is 30 - 70%, which makes this motor particularly suitable for applications with low starting torque requirements, such as fans, circular saws, polishing machines and centrifugal pumps where the shaft seal does not require a high breakaway torque.

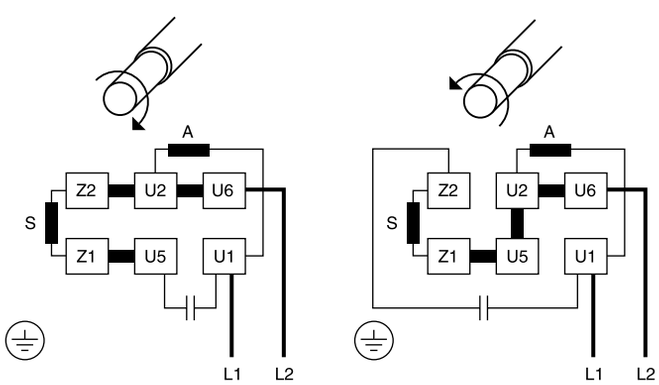

Basic PSC model.

PSC

for speed regulation

The motor's speed can be regulated by changing the voltage to the motor (twin-cable regulation) or by only changing the voltage to the circuit winding (three-cable regulation). The best regulation and the minimum loss in the motor is achieved only by changing the voltage to the circuit winding.

The voltage can be regulated using a tranformer or a Triac control. The Triac control provides a greater loss in the motor and can contribute to noise in the motor.

To achieve good speed regulation it is important that the motor is suitable for the load. If the motor is too large for the load the regulation range will be small; at full speed the motor should not be loaded with less than 80% of its full load. With correct dimensioning it is possible to regulate speed down to approx. 30% of nominal speed.

Speed regulation is suitable for the following applications: fans where blades are mounted directly on the motor shaft and centrifugal pumps where the shaft seal does not require a high breakaway torque.

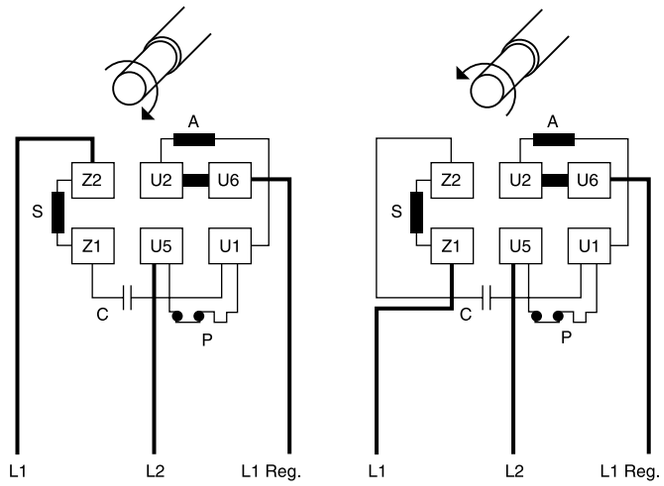

PSC model. Regulation of number of revolutions using electronic device (TRIAC).

Reversing

As a rule a single phase motor can only reverse when it stops completely before the rotational direction is changed. In CSR motors it is also important that the capacitor is discharged before the voltage is reconnected, as otherwise the starter relay will not connect the starter capacitor.

It is possible to design a PSC motor that is suitable for reversing. The motor has a joint start and circuit winding, which provides for very simple switching.

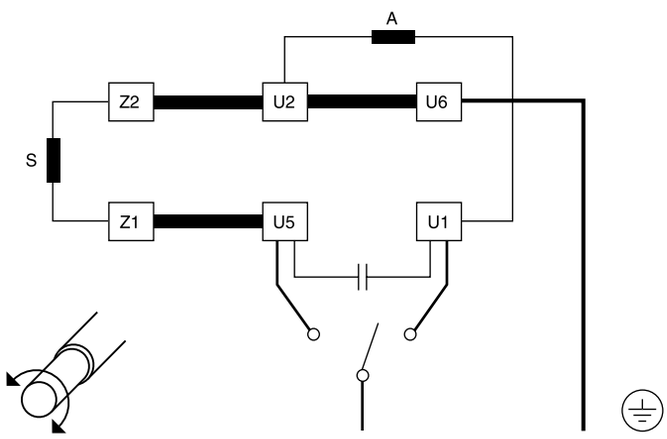

No load

Standard single phase motors cannot run idle for a long period. The losses are greater when running idle than at full load. If the motor is to run idle for a long period, specially designed windings must be produced.

Mechanical design

Stator

Stator framework, bearing shields and feet are made of aluminum alloy with low copper content.

Drain holes

Motors that will be operated in very humid or wet environments, and especially under intermittent duty, should be provided with drain holes. The appropriate IM designation, such as IM 3031, is specified on the basis of the method of mounting the motor.

In the basic design motors are supplied with drain holes as standard (see diagram below) on both D-end and N-end.

When mounting the motors, it should be ensured that the drain hole faces downwards. In the case of vertical mounting, the upper plug must be hammered home. In very dusty environments both plugs should be hammered home.

See variant codes 065 and 066 under the heading “Drain holes”.

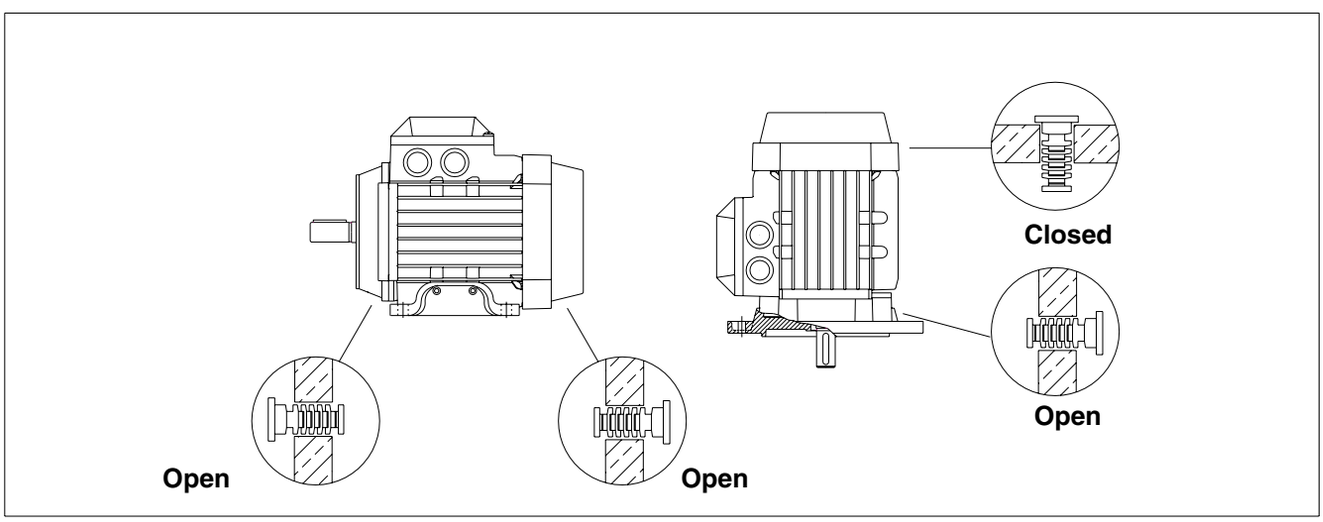

8

Terminal box and connections

Terminal box for sizes 56 to 63
The terminal box is made of aluminum and is located on top of the stator as standard. It is provided with two knockout openings (one Pg and one metric) and can be turned 4x90°.

Cable glands are not included. The size of the box is the same in size 56 and 63.

Terminal box for sizes 71 to 100
The terminal box is made of aluminum and is located either on the top of the motor, or on either side of the motor. The lower part of the box is integrated with the stator and allows cable entries from both sides.

It is provided with two knockout openings on each side. Cable glands are not included.

Degree of protection of standard terminal box is IP 55.

Position of terminal box

Motor size	Terminal box on top	right side	left side
56-63	standard	–	–
71-100	standard	on request	on request

Terminal box examples

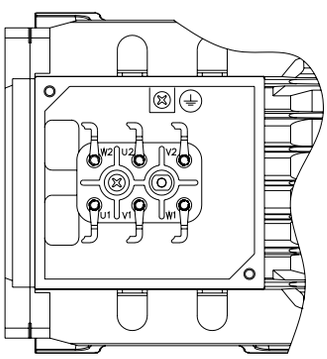

Motor sizes 56-80.

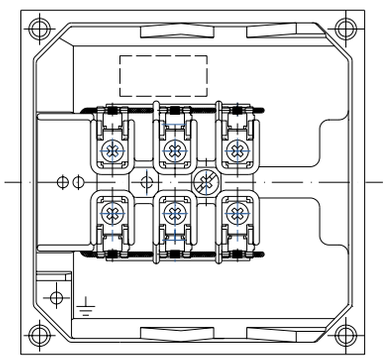

Motor sizes 90-100.

Connections

The terminal block is provided with 6 terminals for connecting Cu-cable. The terminals are marked in accordance with IEC 60034-8.

Connection openings

Motor size	Opening	Metric cable entry	Cable diameter, mm, min-max	Terminal bolt size 6 x	Maximum connectable Cu-cable area, mm2
56-63	Knock-out opening	**1 x M16 x 1.5; 1 x Pg 11**	5-12	M4	2.5
71-80	Knock-out opening	**2 x M20 x 1.5; 1 x Pg 16**	8-15	M4	4
90-100	Knock-out opening	**2 x (M25 + M20) x 1.5**	11-16	M4	2.5 (for PCS) or 1.5 (for CSR)

Bearings

The motors are provided with bearings, according to the tables on the right.

Motor size	Standard bearing type D-end	N-end
56	6201-2Z/C3	6201-2Z/C3
63	6202-2Z/C3	6201-2Z/C3
71	6203-2Z/C3	6202-2Z/C3
80	6204-2Z/C3	6203-2Z/C3
90	6205-2Z/C3	6204-2Z/C3
100	6306-2Z/C3	6205-2Z/C3

Axially-locked bearings

The table on the right shows which of the motor's bearings is axially locked in the bearing seat. In motor sizes 56 to 80 the locking is done by an inner bearing circlip, in motor sizes 90 and 100 by an inner bearing cover.

Motor size	Foot-mounted motors	Flange-mounted motors	
		Large flange	Small flange
56-63	On request	On request	On request
71-80	On request	D-end	On request
90-100	D-end [1]	D-end [1]	D-end [1]

[1] A spring washer at N-end presses the rotor towards D-end.

Lifetime of bearing/grease

The motors are supplied with bearings that are lubricated for life with a bearing grease for use at normal temperatures in dry or humid environments.

The grease's operating temperature is between -40 and +160°C. See also variant code 039 under the heading "Bearings and Lubrication".

The life time of the grease L10 is defined as the number of operating hours after which 90% of the bearings are sufficently well lubricated. 50% of the bearings can achieve a grease life time that is twice as long.

The maximum life time of the grease should, however, be considered to be 40,000 hours, equivalent to around 5 years.

Motor size	No. of poles	Hours
56-80	2-6	40.000
90	2	30.000
90	4-6	40.000
100	2	28.000
100	4-6	40.000

Pulley diameter

8

When the desired bearing life has been determined, the minimum permissible pulley diameter can be calculated with FR, according to the formula:

$$D = \frac{1.9 \cdot 10^7 \cdot K \cdot P}{n \cdot FR}$$

Where:

D = diameter of pulley, mm

P = power requirement, kW

n = motor speed, r /min

K = belt tension factor, dependent on belt type and type of duty. A common value for V belts is K= 2.5

FR = permissible radial force

Permissible loading on shaft

The table below shows the permitted radial force in Newtons at zero axial force.

The permitted load of combined radial and axial force is available on request.

The bearing's life time, L_{10}, is calculated according to SKF's new theory on the life time of bearings, L_{10aah}, which also takes into account the purity of the grease.

If the radial force is applied between points X_0 and X_{max}, the permissible force F_R can be calculated from the following formula:

$$F_R = F_{X0} - \frac{X}{E}(F_{X0} - F_{Xmax})$$

E = length of shaft extension in basic version

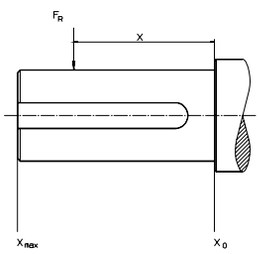

Permissible radial forces

Motor size	No. of poles	Length of shaft extension E (mm)	Ball bearings Basic design with deep groove ball bearings 25,000 hours FX_0 (N)	FX_{max}(N)	40,000 hours FX_0 (N)	FX_{max}(N)
56	2	20	240	200	260	200
56	4	20	300	200	280	200
56	6-8	20	340	280	340	280
63	2-4	30	490	400	490	400
71	2-6	30	680	570	680	570
80	2-6	40	930	750	930	750
90	2-6	50	1010	810	1010	810
100	2-6	60	2280	1800	2280	1800

Permissible axial forces

The following tables give the permissible axial forces in Newton, assuming zero radial force.

The permitted load of combined radial and axial force is available on request.

Mounting arrangement IM B3 F_{AD} ➔ ← F_{AZ}

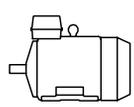

Motor size	25,000 hours 2-pole F_{AD} N	F_{AZ} N	4-pole F_{AD} N	F_{AZ} N	6-pole F_{AD} N	F_{AZ} N	40,000 hours 2-pole F_{AD} N	F_{AZ} N	4-pole F_{AD} N	F_{AZ} N	6-pole F_{AD} N	F_{AZ} N
56	470	230	520	280	540	300	430	190	470	230	480	240
63	790	390	865	465			720	320	780	380		
71	985	485	1070	570	1135	635	900	400	970	470	1020	520
80	1305	705	1420	820	1505	905	1185	585	1285	685	1350	750
90	1360	930	1490	1070	1590	1165	1225	800	1335	915	1415	990
100	2805	1945	3075	2215	3260	2400	2540	1680	2760	1900	2910	2050

Mounting arrangement IM V1

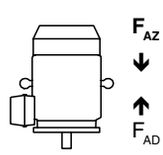

Motor size	25,000 hours 2-pole F_{AD} N	F_{AZ} N	4-pole F_{AD} N	F_{AZ} N	6-pole F_{AD} N	F_{AZ} N	40,000 hours 2-pole F_{AD} N	F_{AZ} N	4-pole F_{AD} N	F_{AZ} N	6-pole F_{AD} N	F_{AZ} N
56	470	230	520	270	540	290	430	190	470	230	480	240
63	790	380	875	455			725	310	790	370		
71	998	470	1085	555	1150	620	910	385	985	455	1035	505
80	1320	685	1445	790	1530	880	1200	565	1310	655	1375	725
90	1390	900	1525	1035	1625	1130	1225	770	1370	880	1450	955
100	2855	1890	3135	2155	3320	2340	2590	1625	2820	1840	2970	1990

Ordering information

Sample order

When placing an order, please state the following minimum data in the order, as in the example.

The product code of the motor is composed in accordance with the following example.

Motor type	M3VD 80C
Pole number	2
Mounting arrangement (IM-code)	IM B3 (IM 1001)
Rated output	1.4 kW
Product code	3GVD 081003-ASB
Variant codes if needed	

A	B	C	D, E, F G
M3VD	**80 C**	**3GVD 081 003**	**- ASB, 122, 053, etc.**
		1 2 3 4 5-6 7 8-10	11 12 13 14...

A Motor type
B Motor size
C Product code
- D Mounting arrangement code
- E Voltage/frequency code
- F Generation code
- G Variant codes

Explanation of the product code

Positions 1 and 2
3G = Business area LV Motors

Position 3 and 4
Enclosure and stator frame material
A, V = Totally enclosed motor with aluminum stator frame

Position 4
Motor type
D = Single-phase motor - CSR
E = Single-phase motor - PSC

Positions 5 and 6
IEC size
05 = 56
06 = 63
07 = 71
08 = 80
09 = 90
10 = 100

Position 7
Speed (pole pairs)
1 = 2 poles
2 = 4 poles
3 = 6 poles

Positions 8 to10
Serial number

Position 11
- (dash)

Position 12
Mounting arrangement
A = Foot-mounted motor.
B = Flange-mounted motor.
Large flange with clearance holes.
C = Flange-mounted motor.
Small flange with threaded holes.
H = Foot- and flange-mounted motor.
Large flange with clearance holes.
J = Foot- and flange-mounted motor.
Small flange with threaded holes.
N = Flange-mounted (CI ring flange FF).
P = Foot- and flange-mounted motor.
(CI ring flange FF).
V = Flange-mounted motor. Special flange.

Position 13
Voltage/frequency code
S = 230-240 V 50 Hz.
X = Other rated voltage, connection or frequency.

Position 14
B, E = Generation code

The product code must be, if needed, followed by variant codes.

General purpose single phase motors

CSR motors, starting torque approx. 140-160 %

IP 55 – IC 411 – Insulation class F, temperature rise class B

Output kW	Type designation	Product code	Speed r/min	Efficiency %	Power factor cos φ	Current I_N A	Current I_s / I_N	Torque T_N Nm	Torque T_s / T_N	Torque T_{max} / T_N	Capasitor Start µF	Capasitor Run µF	Moment of inertia J=1/4 GD² kgm²	Weight kg
3000 r/min = 2 poles			**230 V 50 Hz**											
0.18	**M3VD 63 A**	3GVD 061 001-••B	2820	56.5	0.92	1.6	3.3	0.61	2.0	2.0	16	8	0.000160	5
0.25	**M3VD 63 B**	3GVD 061 002-••B	2820	60.5	0.94	1.95	3.6	0.85	2.0	2.1	20	10	0.000360	5.5
0.37	**M3VD 71 A**	3GVD 071 001-••B	2855	71.5	0.99	2.3	4.8	1.25	1.7	1.8	40	10	0.000400	6
0.55	**M3VD 71 B**	3GVD 071 002-••B	2860	72.5	0.99	3.4	4.8	1.85	1.7	1.8	60	16	0.000450	7
0.75	**M3VD 71 C**	3GVD 071 003-••B	2860	74.5	0.99	4.4	4.9	2.5	1.7	1.8	60	20	0.000500	7.5
0.75	**M3VD 80 A**	3GVD 081 001-••B	2860	73.0	0.99	4.4	4.6	2.0	1.8	2.2	80	20	0.000722	9.5
1.10	**M3VD 80 B**	3GVD 081 002-••B	2860	74.5	0.99	6.5	4.6	3.7	1.7	2.1	100	25	0.000763	11.5
1.4 [1]	**M3VD 80 C**	3GVD 081 003-••B	2860	75.5	0.99	8.2	4.8	4.7	1.7	2.0	100	30	0.001093	12
1.5	**M3AD 90 L**	3GAD 091 202-••E	2910	80.0	0.99	8.2	4.6	5.0	1.4	1.9	130	40	0.00190	13
2.2	**M3AD 90 LB**	3GAD 091 203-••E	2910	81.5	0.99	11.8	4.2	7.3	1.1	1.8	130	50	0.00240	16
1500 r/min = 4 poles			**230 V 50 Hz**											
0.12	**M3VD 63 A**	3GVD 062 001-••B	1350	49.5	0.95	1.2	3.0	0.85	1.6	1.5	16	4	0.000260	5
0.18	**M3VD 63 B**	3GVD 062 002-••B	1360	55.0	0.97	1.5	3.0	1.25	1.6	1.5	20	6	0.000300	5.5
0.25	**M3VD 71 A**	3GVD 072 001-••B	1410	64.0	0.99	1.75	4.3	1.7	1.7	1.6	40	6	0.000660	6
0.37	**M3VD 71 B**	3GVD 072 002-••B	1410	67.5	0.98	2.45	4.5	2.5	1.7	1.6	60	8	0.000890	7
0.5	**M3VD 71 C**	3GVD 072 003-••B	1410	68.5	0.98	3.2	4.5	3.4	1.7	1.6	60	12	0.001100	7.5
0.55	**M3VD 80 A**	3GVD 082 001-••B	1410	70.5	0.93	3.7	4.0	3.7	1.9	1.8	60	16	0.001257	9.5
0.75	**M3VD 80 B**	3GVD 082 002-••B	1410	72.0	0.93	4.9	4.1	5.1	2.0	1.8	80	20	0.001565	11
0.95	**M3VD 80 C**	3GVD 082 003-••B	1410	73.0	0.93	6.1	4.1	6.1	1.8	1.8	80	16	0.001948	11.5
1.1	**M3AD 90 S**	3GAD 092 201-••E	1420	76.0	0.99	6.3	4.0	7.35	1.6	1.5	100	30	0.00320	13
1.5	**M3AD 90 L**	3GAD 092 202-••E	1430	79.5	0.99	8.3	4.3	10.0	1.9	1.7	130	40	0.00430	16
1.7	**M3AD 90 LB**	3GAD 092 203-••E	1430	79.5	0.99	9.4	3.4	11.5	1.3	1.6	130	60	0.00480	17
1.85	**M3AD 100 LA**	3GAD 102 201-••E	1390	76.5	0.99	10.6	3.0	12.7	1.3	1.4	100	50	0.00690	21
2.2	**M3AD 100 LB**	3GAD 102 202-••E	1400	79.5	0.99	12	3.2	15	1.2	1.5	80	50	0.00820	24
1000 r/min = 6 poles			**230 V 50 Hz**											
0.18	**M3VD 71 A**	3GVD 073 001-••B	880	52.0	0.99	1.5	2.8	1.95	1.5	1.3	20	10	0.000630	6
0.25	**M3VD 71 B**	3GVD 073 002-••B	880	59.0	0.99	1.9	3.0	2.7	1.5	1.3	40	12	0.000810	7
0.32	**M3VD 71 C**	3GVD 073 003-••B	880	61.0	0.99	2.3	3.0	3.5	1.5	1.3	40	16	0.001100	7.5
0.37	**M3VD 80 A**	3GVD 083 001-••B	900	65.0	0.97	2.6	3.0	3.9	1.8	1.5	40	12	0.001842	9.5
0.55	**M3VD 80 B**	3GVD 083 002-••B	900	66.0	0.97	3.8	3.1	5.8	1.8	1.5	40	20	0.002176	10.5
0.65 [1]	**M3VD 80 C**	3GVD 083 003-••B	900	67.5	0.97	4.3	3.2	6.9	1.8	1.5	60	25	0.002576	11.5
0.85	**M3AD 90 L**	3GAD 093 202-••E	930	71.0	0.96	5.4	3.9	8.65	1.7	1.4	80	25	0.00430	16

[1] Temperature rise class F.

The bullets in the product code indicate choice of mounting arrangement, voltage and frequency, generation code (see ordering information page).

General purpose single phase motors

PSC motors, starting torque 30-70 %

IP 55 – IC 411 – Insulation class F, temperature rise class B

Output kW	Type designation	Product code	Speed r/min	Efficiency %	Power factor cos φ	Current I_N A	Current I_s / I_N	Torque T_N Nm	Torque T_s / T_N	Torque T_{max} / T_N	Capasitor Run µF	Moment of inertia J=1/4 GD² kgm²	Weight kg
3000 r/min = 2 poles			**230 V 50 Hz**										
0.065	**M3VE 56 A**	3GVE 051 001-••B	2830	39.0	0.86	0.87	2.5	0.22	0.4	1.9	4	0.000110	3.5
0.09	**M3VE 56 B**	3GVE 051 002-••B	2820	43.0	0.84	1.15	2.6	0.31	0.35	1.8	4	0.000120	4
0.12	**M3VE 56 BB**	3GVE 051 003-••B	2800	48.0	0.95	1.15	2.5	0.41	0.4	1.3	6	0.000120	4
0.18	**M3VE 63 A**	3GVE 061 001-••B	2820	55.0	0.90	1.6	2.9	0.61	0.5	1.9	8	0.000160	5
0.25	**M3VE 63 B**	3GVE 061 002-••B	2810	59.5	0.94	1.95	3.0	0.85	0.6	1.8	10	0.000360	5.5
0.37	**M3VE 71 A**	3GVE 071 001-••B	2750	65.5	0.97	2.6	3.0	1.3	0.6	1.7	12	0.000400	6
0.55	**M3VE 71 B**	3GVE 071 002-••B	2750	67.5	0.97	3.7	3.0	1.95	0.6	1.7	16	0.000450	7
0.65 [1]	**M3VE 71 C**	3GVE 071 003-••B	2750	68.5	0.97	4.3	3.2	2.25	0.6	1.7	20	0.000500	7.5
0.75	**M3VE 80 A**	3GVE 081 001-••B	2760	68.5	0.96	5.0	3.5	2.6	0.4	1.6	20	0.000722	9.5
0.9	**M3VE 80 B**	3GVE 081 002-••B	2775	70.5	0.96	5.8	3.7	3.1	0.45	1.6	25	0.000763	11.5
1.1 [1]	**M3VE 80 C**	3GVE 081 003-••B	2800	72.0	0.97	7.4	3.9	3.75	0.4	1.7	30	0.001093	12
1.5	**M3AE 90 L**	3GAE 091 102-••E	2850	76.5	0.99	8.7	4.2	5.1	0.4	2.0	40	0.00240	16
1500 r/min = 4 poles			**230 V 50 Hz**										
0.065	**M3VE 56 A**	3GVE 052 001-••B	1360	38.0	0.87	0.9	2.0	0.46	1.1	1.6	4	0.000180	4
0.09	**M3VE 56 B**	3GVE 052 002-••B	1340	39.0	0.95	1.1	1.8	0.64	1.0	1.5	6	0.000180	4
0.12	**M3VE 63 A**	3GVE 062 001-••B	1350	48.5	0.92	1.2	1.9	0.85	0.65	1.5	6	0.000260	5
0.18	**M3VE 63 B**	3GVE 062 002-••B	1360	55.0	0.95	1.5	1.9	1.25	0.6	1.5	8	0.000300	5.5
0.25	**M3VE 71 A**	3GVE 072 001-••B	1350	57.5	0.95	2.0	2.6	1.8	0.6	1.5	12	0.000660	6
0.3	**M3VE 71 B**	3GVE 072 002-••B	1360	62.0	0.95	2.2	2.7	2.1	0.65	1.5	16	0.000890	7
0.37	**M3VE 71 C**	3GVE 072 003-••B	1370	64.0	0.95	2.7	3.1	2.6	0.7	1.6	20	0.001100	7.5
0.55	**M3VE 80 A**	3GVE 082 001-••B	1340	64.0	0.91	4.1	3.3	3.85	0.55	1.6	16	0.001257	9.5
0.65	**M3VE 80 B**	3GVE 082 002-••B	1360	67.0	0.91	4.7	3.3	4.6	0.6	1.6	20	0.001565	11
0.75	**M3VE 80 C**	3GVE 082 003-••B	1410	68.0	0.92	5.2	3.6	4.9	0.45	1.7	30	0.001948	11.5
1.3	**M3AE 90 L**	3GAE 092 102-••E	1330	72.0	0.99	7.9	2.3	9.3	0.4	1.3	30	0.00430	16
1.5	**M3AE 90 LB**	3GAE 092 103-••E	1340	73.0	0.99	9.0	2.3	10.6	0.4	1.3	40	0.00480	17
1.85	**M3AE 100 LA**	3GAE 102 101-••E	1380	75.5	0.99	10.7	2.6	12.8	0.3	1.3	50	0.00690	21
2.2	**M3AE 100 LB**	3GAE 102 102-••E	1400	78.5	0.99	12.2	3.1	14.9	0.3	1.6	50	0.00820	24
1000 r/min = 6 poles			**230 V 50 Hz**										
0.12	**M3VE 71 A**	3GVE 073 001-••B	850	45.0	0.96	1.25	1.8	1.35	0.75	1.3	8	0.000630	6
0.18	**M3VE 71 B**	3GVE 073 002-••B	860	48.0	0.96	1.7	1.9	2.1	0.8	1.4	10	0.000810	7
0.25	**M3VE 71 C**	3GVE 073 003-••B	860	51.5	0.96	2.2	1.9	2.8	0.8	1.4	12	0.001100	7.5
0.30	**M3VE 80 A**	3GVE 083 001-••B	900	56.5	0.91	2.5	2.5	3.2	0.65	1.5	12	0.001842	9.5
0.37	**M3VE 80 B**	3GVE 083 002-••B	900	58.5	0.92	3.0	2.5	3.9	0.65	1.5	12	0.002176	10.5
0.55 [1]	**M3VE 80 C**	3GVE 083 003-••B	880	59.5	0.90	4.5	2.5	6	0.7	1.4	16	0.002576	11.5
0.75	**M3AE 90 L**	3GAE 093 102-••E	850	64.5	0.99	5.1	1.8	8.35	0.5	1.1	30	0.00430	16

[1] Temperature rise class F.

The bullets in the product code indicate choice of mounting arrangement, voltage and frequency, generation code (see ordering information page).

General purpose single phase motors

PSC motors for speed regulation

IP 55 – IC 411 – Insulation class F, temperature rise class B

Output kW	Type designation	Product code	Speed r/min	Efficiency %	Power factor cos φ	Current I_N A	Current I_s / I_N	Torque T_N Nm	Torque T_s / T_N	Capasitor Run µF	Moment of inertia J=1/4 GD² kgm²	Weight kg
1500 r/min = 4 poles			**230 V 50 Hz**									
0.7	**M3AE 90 S**	3GAE 092 201-••E	1360	71.0	0.99	4.4	2.3	4.9	0.5	25	0.00320	13
0.9	**M3AE 90 L**	3GAE 092 202-••E	1370	73.5	0.99	5.4	2.3	6.3	0.4	30	0.00430	16
1000 r/min = 6 poles			**230 V 50 Hz**									
0.75	**M3AE 90 L**	3GAE 093 202-••E	850	64.5	0.99	5.1	1.8	8.35	0.5	30	0.00430	16

[1)] Temperature rise class F.

The bullets in the product code indicate choice of mounting arrangement, voltage and frequency, generation code (see ordering information page).

Rating plate

The standard rating plates is in aluminum. Rating plate is available in stainless steel, see variant code 098.

Motor sizes 56 to 71

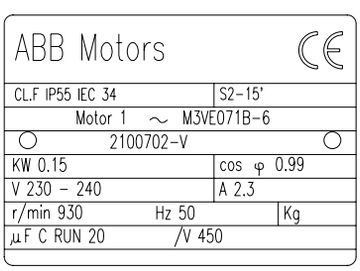

Motor sizes 90 to 100

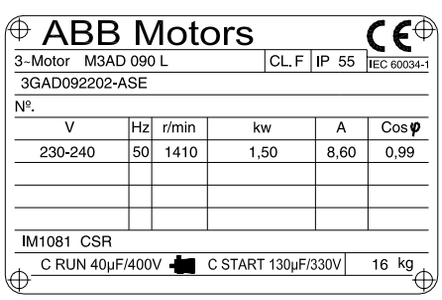

Motor size 80

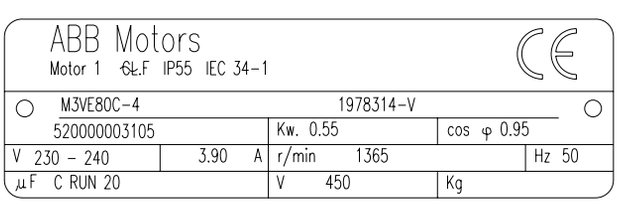

8

General purpose single phase motors – Variant codes

Code [1]	Variant	Motor size 56-63	71-80	90-100
	Balancing			
052	Vibration acc. to grade A (IEC 60034-14).	P	P	P
423	Balancing without key.	P	P	P
424	Balancing with full key.	P	P	P
	Bearings and lubrication			
036	Transport lock for bearings.	NA	NA	M
037	Roller bearinig at D-end. Transport lock included.	NA	NA	M
039	Cold resistant grease. For bearing temperatures -55...+100°C.	M	M	M
040	Heat resistant grease. For bearing temperatures -25...+150°C. Mandatory for ambient temperatures > 50°C.	M	M	M
041	Bearings regreasable via grease nipples.	NA	NA	M
042	Internal bearing cover, locked at D-end.	NA	M	M
057	2RS bearings at both ends. Grease for bearing temperatures -20...+110°C.	M	M	M
058	Angular contact ball bearing at D-end, shaft force away from bearing. Transport lock included.	NA	NA	M
059	Angular contact ball bearing at D-end, shaft force away towards bearing. Transport lock included.	NA	NA	M
188	63-series bearings.	NA	NA	M
	Branch standard design			
079	Silumin-alloy rotor cage.	NA	P	P
178	Stainless steel/acid proof bolts	M	M	M
209	Non-standard voltage or frequency (special winding)	P	P	P
425	Corrosion protected stator and rotor core.	P	P	M
	Cooling system			
068	Metal fan.	NA	M	M
075	Cooling method IC 418 (without fan).	P	P	P
183	Separate motor cooling (fan axial, N-end).	NA	M	R
	Dimension drawing			
141	Binding dimension drawing.	M	M	M
	Drain holes			
066	Modified drain hole position.	M	M	M
	Earthing bolt			
067	External earthing bolt. Earthing screw for connection of external protective earth.		M	M M
	Heating elements			
	Motor size / Element capacity			
	56-71 / 8 W			
	80-100 / 25 W			
450	Heating element 100-120 V.	M	M	M
451	Heating element 200-240 V.	M	M	M

[1] Certain variant codes cannot be used simultaneously.

S = Included as standard.
M = On modification of a stocked motor, or on new manufacture, the number per order may be limited.
P = New manufacture only.
R = On request.
NA = Not applicable.

Code [1]	Variant	Motor size 56-63	71-80	90-100
	Insulation systems			
014	Winding insulation class H (PSC-motors only).	P	P	P
	Mounting arrangements			
008	IM 2101 foot/flange mounted, from IM 1001 (B34 from B3).	M	M	M
009	IM 2001 foot/flange mounted, from IM 1001 (B35 from B3).	M	M	M
047	IM 3601 flange mounted, IEC flange, from IM 3001 (B14 from B5).	M	M	M
048	IM 3001 flange mounted, IEC flange, from IM 3601 (B5 from B14).	M	M	M
078	IM 3601 flange-mounted, DIN C flange. Large flange with tapped holes. Larger flange than standard version.	NA	P	NA
080	IM 3001 flange-mounted, DIN A flange. Large flange with clearance holes. Larger flange than standard version.	NA	P	NA
200	Flange ring holder.	NA	P	M
217	Cast iron D-end shield.	NA	NA	M
218	Flange ring FT 85.	NA	P	M (only 90)
219	Flange ring FT 100.	NA	P	M (only 90)
220	Flange ring FF 100.	NA	P	M (only 90)
223	Flange ring FT 115.	NA	P	M (only 90)
224	Flange ring FF 115.	NA	P	M (only 90)
226	Flange ring FT 135.	NA	P	M
227	Flange ring FF 135.	NA	P	M
233	Flange ring FT 165.	NA	P	M
234	Flange ring FF 165.	NA	P	M
243	Flange ring FT 215.	NA	NA	M (only 100)
244	Flange ring FF 215.	NA	NA	M (only 100)
	Painting			
114	Special paint colour, standard grade	M	M	M
179	Special paint specification.	NA	NA	R
	Protection			
005	Protective roof, vertical motor, shaft down.	M	M	M
072	Radial seal at D-end.	P	P	M
073	Sealed against oil at D-end.	P	P	NA
158	Degree of protection IP 65.	M	M	P
211	Weather protected, IP xx W.	NA	NA	P
403	Degree of protection IP 56. Water from waves which splash over must not enter in serious quantities.	P	P	P
	Rating & instruction plates			
002	Restamping voltage, frequency and output, continuous duty.	M	M	M
003	Individual serial number.	P	P	M
098	Stainless rating plate.	M	M	M
138	Mounting of additional identification plate.	M	M	M
139	Additional identification plate delivered loose.	M	M	M
161	Additional rating plate delivered loose.	M	M	M

[1] Certain variant codes cannot be used simultaneously.

S = Included as standard.
M = On modification of a stocked motor, or on new manufacture, the number per order may be limited.

P = New manufacture only.
R = On request.
NA = Not applicable.

8

Code [1]	Variant	Motor size 56-63	71-80	90-100
	Shaft and rotor			
069	Two shaft extensions as per basic catalogue. Standard shaft material.	P	P	P
070	One or two special shaft extensions, standard shaft material.	P	P	P
165	Shaft extension with open key-way.	P	P	P
410	Stainless/acid-proof steel shaft, standard or non-standard design. One or two shaft extensions.	P	P	P
	Standards and regulations			
010	Fulfilling CSA Safety Certificate.	P	P	P
029	Fulfilling Underwriters Laboratory (UL) requirements.	NA	NA	P
	Stator winding temperature sensors			
121	Bimetal detectors, break type (NCC), (3 in series), 130°C, in stator winding.	M	M	R
122	Bimetal detectors, break type (NCC), (3 in series), 150°C, in stator winding.	M	M	M
435	PTC-thermistors (3 in series), 130°C in stator winding.	M	M	M
436	PTC-thermistors (3 in series), 150°C in stator winding.	M	M	M
437	PTC-thermistors (3 in series), 170°C in stator winding.	M	M	M
	Terminal box			
021	Terminal box LHS (seen from D-end).	NA	M	M
136	Extended cable connection, standard terminal box.	P	P	M
137	Extended cable connection, low terminal box.	P	P	P
180	Terminal box RHS (seen from D-end).	NA	M	M
230	Standard cable gland.	M	M	M
731	Two standard cable glands.	NA	M	M
	Testing			
146	Type test with report for motor from specific delivery batch.	P	P	P
147	Type test with report for motor from specific delivery batch, customer witnessed.	P	P	P
148	Routine test report.	P	P	R
149	Test according to separate test specification.	NA	NA	R
221	Type test and multi-point load test with report for motor from specific delivery batch.	R	R	P
222	Torque/speed curve, type test and multi-point load test with report from specific delivery batch.	R	R	P
760	Vibration level test.	P	P	R
762	Noise level test.	P	P	P

[1] Certain variant codes cannot be used simultaneously.

[1] Certain variant codes cannot be used simultaneously.

S = Included as standard.
M = On modification of a stocked motor, or on new manufacture, the number per order may be limited.

P = New manufacture only.
R = On request.
NA = Not applicable.

General purpose single phase motors

Dimension drawings

Foot-mounted motor IM B3 (IM 1001)

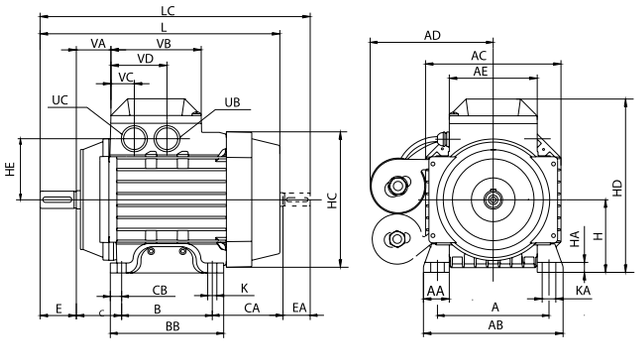

Flange-mounted motor IM B5 (IM 3001), large flange

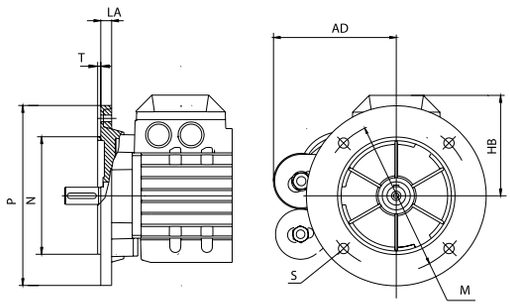

IM B14 (IM 3601), small flange

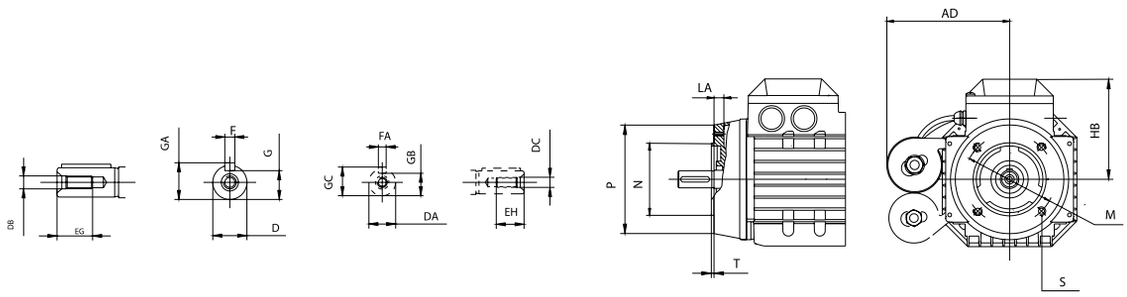

IM B3 (IM 1001)

Motor size	A	AA	AB	AC	AD	AE	B	BB	C	CA	CB	D	DA	DB	DC	E	EA	EG	EH	F	FA
56	90	18	108	110	110	72	71	85	36	78	7	9	9	M3	M3	20	20	9	9	3	3
63	100	26	120	120	110	72	80	96	40	71	8	11	11	M4	M4	23	23	10	10	4	4
71	112	24	136	130	125	85	90	110	45	78	10	14	11	M5	M4	30	23	13	10	5	4
80	125	28	154	150	130	97	100	125	50	80	12.5	19	14	M6	M5	40	30	16	13	6	5
90 S	140	27	170	177	140	110	100	125	56	81	12.5	24	14	M8	M5	50	30	19	12.5	8	5
90 L	140	27	170	177	135	110	125	150	56	81	12.5	24	14	M8	M5	50	30	19	12.5	8	5
100 L	160	32	197	197	155	110	140	172	63	91	16	28	19	M10	M6	60	40	22	19	8	6

Motor size	G	GA	GB	GC	H	HA	HC	HD	HE	K	KA	L	LC	UB	UC	VA	VB	VC	VD
56	7.2	10.2	7.2	10.2	56	8	110	159	71	5.8	9	197	225	Pg11	M16x1.5	30	72	26	53
63	8.5	12.5	8.5	12.5	63	10	120	171	76	7	11	205	237	Pg11	M16x1.5	36	72	26	53
71	11	16	8.5	12.5	71	9	130	176	63	7	10	238	266	Pg16	M20x1.5	35	92	22	57
80	15.5	21.5	11	16	80	10	150	190	67	10	15	265	300	Pg16	M20x1.5	37	100	26	61
90 S	20	27	11	16	90	10	177	217	82.5	10	14	282	317	M20x1.5	M25x1.5	43.5	110	33	67
90 L	20	27	11	16	90	10	177	217	82.5	10	14	307	342	M20x1.5	M25x1.5	43.5	110	33	67
100 L	24	31	15.5	21.5	100	12	197	237	92.5	12	15	349	394	M20x1.5	M25x1.5	47	110	33	67

IM B5 (IM 3001)

Motor size	HB	LA	M	N	P	S	T
56	103	10	100	80	120	7	3
63	108	10	115	95	140	10	3
71	105	10	130	110	160	10	3.5
80	110	12	165	130	200	12	3.5
90 S	127	10	165	130	200	12	3.5
90 L	127	10	165	130	200	12	3.5
100 L	137	11	215	180	200	15	4

IM B14 (IM 3601)

Motor size	HB	LA	M	N	P	S	T
56	103	10	65	50	80	M5	2.5
63	108	10	75	60	90	M5	2.5
71	105	10	85	70	105	M6	2.5
80	110	10	100	80	120	M6	3
90 S	127	13	115	95	140	M8	3
90 L	127	13	115	95	140	M8	3
100 L	137	14	130	110	160	M8	3.5

Tolerances

A, B	ISO js 14	F	ISO h9
C	± 0.8	H	+0 –0.5
D, DA	ISO j6	N	ISO j6

Above table gives the main dimensions in mm.
For detailed drawings please see our web-site
'www.abb.com/motors&drives' or contact us.

8

General purpose single phase motors

Dimension drawings

Foot- and flange-mounted motor, large flange IM B35 (IM 2001)

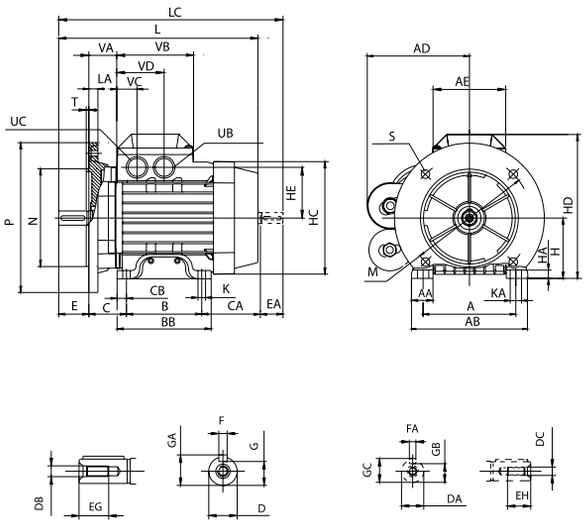

Foot- and flange-mounted motor, small flange IM B34 (IM 2101)

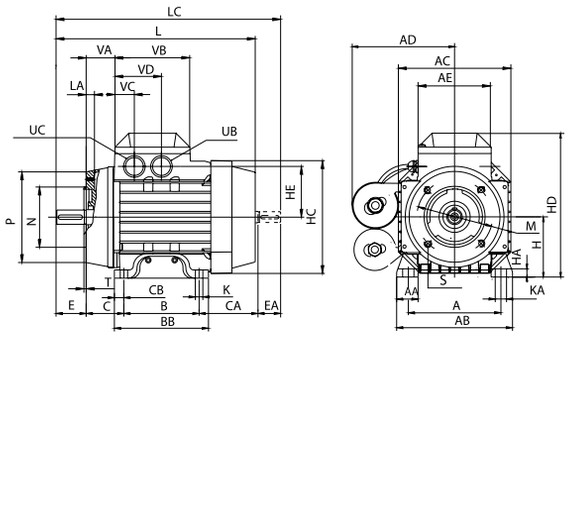

IM B35 (IM 2001); IM B34 (IM 2101)

Motor size	A	AA	AB	AC	AD	AE	B	BB	C	CA	CB	D	DA	DB	DC	E	EA	EG	EH	F	FA
56	90	18	108	110	110	72	71	85	36	78	7	9	9	M3	M3	20	20	9	9	3	3
63	100	26	120	120	110	72	80	96	40	71	8	11	11	M4	M4	23	23	10	10	4	4
71	112	24	136	130	125	85	90	110	45	78	10	14	11	M5	M4	30	23	13	10	5	4
80	125	28	154	150	130	97	100	125	50	80	12.5	19	14	M6	M5	40	30	16	13	6	5
90 S	140	27	170	177	140	110	100	125	56	81	12.5	24	14	M8	M5	50	30	19	12.5	8	5
90 L	140	27	170	177	135	110	125	150	56	81	12.5	24	14	M8	M5	50	30	19	12.5	8	5
100 L	160	32	197	197	155	110	140	172	63	91	16	28	19	M10	M6	60	40	22	19	8	6

Motor size	G	GA	GB	GC	H	HA	HC	HD	HE	K	KA	L	LC	UB	UC	VA	VB	VC	VD
56	7.2	10.2	7.2	10.2	56	8	110	159	71	5.8	9	197	225	Pg11	M16x1.5	30	72	26	53
63	8.5	12.5	8.5	12.5	63	10	120	171	76	7	11	205	237	Pg11	M16x1.5	36	72	26	53
71	11	16	8.5	12.5	71	9	130	176	63	7	10	238	266	Pg16	M20x1.5	35	92	22	57
80	15.5	21.5	11	16	80	10	150	190	67	10	15	265	300	Pg16	M20x1.5	37	100	26	61
90 S	20	27	11	16	90	10	177	217	82.5	10	14	282	317	M20x1.5	M25x1.5	43.5	110	33	67
90 L	20	27	11	16	90	10	177	217	82.5	10	14	307	342	M20x1.5	M25x1.5	43.5	110	33	67
100 L	24	31	15.5	21.5	100	12	197	237	82.5	12	15	349	394	M20x1.5	M25x1.5	47	110	33	67

IM 2001, IM B35

Motor size	HB	LA	M	N	P	S	T
56	103	10	100	80	120	7	3
63	108	10	115	95	140	10	3
71	105	10	130	110	160	10	3.5
80	110	12	165	130	200	12	3.5
90 S	127	10	165	130	200	12	3.5
90 L	127	10	165	130	200	12	3.5
100 L	137	11	215	180	250	15	4

IM 2101, IM B34

Motor size	HB	LA	M	N	P	S	T
56	103	10	65	50	80	M5	2.5
63	108	10	75	60	90	M5	2.5
71	105	10	85	70	105	M6	2.5
80	110	10	100	80	120	M6	3
90 S	127	13	115	95	140	M8	3
90 L	127	13	115	95	140	M8	3
100 L	137	14	130	110	160	M8	3.5

Tolerances

A, B	ISO js 14	F	ISO h9
C	± 0.8	H	+0 –0.5
D, DA	ISO j6	N	ISO j6

Above table gives the main dimensions in mm.
For detailed drawings please see our web-site ‘www.abb.com/motors&drives’ or contact us.

General purpose single phase motors in brief, basic design

Motor size		56	63	71	80	90	100
Stator and feet	Material	Die-cast aluminum alloy. Feet integrated with stator in sizes 63; loose feet in sizes 56 and 71-100.					
	Surface treatment	One-component modified polyester powder paint. Munsell blue 8B 4.5/3.25 / NCS 4822 BO5G, ≥ 30 µm. / RAL 5014					
Bearing end shields	Material	Die-cast aluminum alloy.					
	Surface treatment	One-component modified polyester powder paint. Munsell blue 8B 4.5/3.25 / NCS 4822 BO5G, ≥ 30 µm. / RAL 5014					
Bearings	D-end	6201-2Z/C3	6202-2Z/C3	6203-2Z/C3	6304-2Z/C3	6205-2Z/C3	6306-2Z/C3
	N-end	6201-2Z/C3	6201-2Z/C3	6202-2Z/C3	6203-2Z/C3	6204-2Z/C3	6205-2Z/C3
Axially locked bearings	Internal bearing cap	1)	1)	1)	1)	D-end	D-end
		1) By foot-mounted motors and motors with small flange: A spring washer in N-end presses the rotor against D-end.					
Bearing seals	D-end	V ring.					
	N-end	Labyrinth seal.					
Lubrication		Permanently lubricated bearings. Grease temperature (-30…+150°C).					
Terminal box	Material	Die-cast aluminum alloy.					
	Surface treatment	Similar to stator.					
	Srews	Steel 5 G, galvanised and yellow chromated.					
Connections	Connection openings	4 x M16		4 x M20		2 x (M25 + M20)	
	Terminal box Max Cu range, mm²	Screw terminal, 6 terminals. PSC = 2.5. CSR = 1.5.					
Fan	Material	Polypropylene. Reinforced with 20% glass fibre.					
Fan hood	Material	Metal.					
Stator winding	Material	Copper.					
	Impregnation	Polyester coating. Tropicalized.					
	Insulation class	Insulation class F.					
Rotor winding	Material	Die-cast aluminum.					
Balancing method		Half key balancing.					
Key ways		Closed key way.					
Heating elements	On request	8 W			25 W		
Drain holes		Standard.					
Enclosure		IP 55.					
Cooling method		IC 411.					

8

8

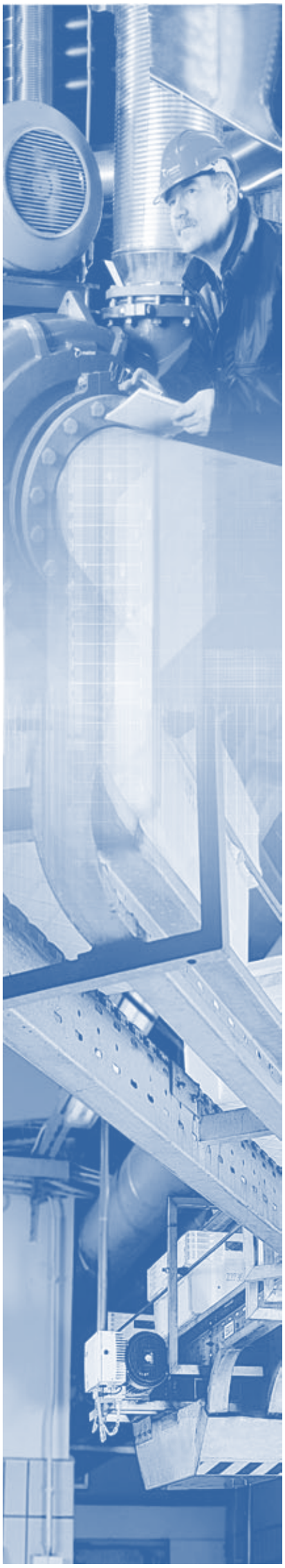

Integral Motors

Totally enclosed squirrel cage three phase low voltage motors, Sizes 71 - 100, 0.37 to 2.2 kW

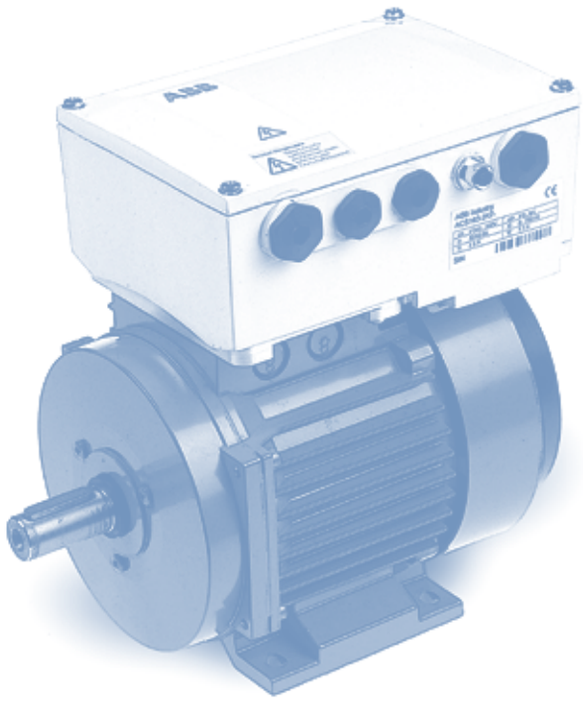

www.abb.com/motor&drives
> Motors
> Low voltage motors
> General purpose motors

Features.....238
Connections.....239
Ordering information.....240
Technical data.....241
Technical specification for frequency converter.....245
Variant codes.....247
Derating information.....249
Dimensions.....250

9

Features

Integral Motor - the choice for a demanding environment
Demanding environments place a requirement for high protection class motors with good vibration endurance. This is why the integral motor is IP 55 protected. In addition to the wide selection of digital and analogue user interfaces, the integral motor offers higher integration into the modern control system with its fieldbuses, to meet the demands for distributed control.

Products according to your needs
Integral motor models are available as 2, 4 or 6 pole versions. The integral motor is delivered as an integrated, ready-to-use unit equipped with a brake, separate ventilation, or any other selected variants. The pre-set parameters offer configuration required by most of the simple applications and make commissioning and use as easy as possible. For more demanding applications, an optional control panel or PC software tool can be used to select from a range of more advanced application macros.

Fulfil EMC limits at every level
Electro Magnetic Compatibility is an important issue in AC automation. The integral motor complies with European distribution limits with the help of built-in EMC filters, so that no external filtering is needed. Standard models of the integral motor fulfil EMC requirements in industrial environments and models with RFI filter in the domestic environments.

Excellent features for OEM's
The integral motor provides a low cost way to enhance an application's performance: it is not limited to "soft starting" applications in which integrated motor-drive combinations have traditionally been used.

Features include up to 180 % overload capacity during start-up, PTC interface, built-in mechanical brake control and electrical braking produce an unbeatable combination for material handling applications. The robust design withstands supply voltage fluctuations and the wide selection of fieldbus options makes integration into automation systems easy.

One of the most interesting features is the Positioning Macro, which together with an optional encoder makes it possible to eliminate expensive PLCs in simple positioning applications. This feature is useful for example in controlling conveyor lines or opening doors.

Intelligent control for pumps and fans
The built-in PID controller's two parameter sets make the integral motor ideally suited for pump and fan applications. The integral motor can be configured to indicate directly parameters such as the flow rate of a pumped fluid, for instance. With the integral motor it is possible to make a connection to building automation via a LonWorks fieldbus adapter.

Typically no overload capacity is needed in pump or fan applications. This allows the integral motor to be optimised for squared torque use.

The integral motor offers
- Mounting to demanding environment
- Ready-to-use configuration with pre-set parameters
- Full configurable functionality when using an IP65 control panel
- Easy adaptation to automation systems with wide range of fieldbuses
- Built-in EMC filter and brake chopper
- Simple positioning tasks with Positioning application macro
- Optimised selection integral motor models and integrated variants

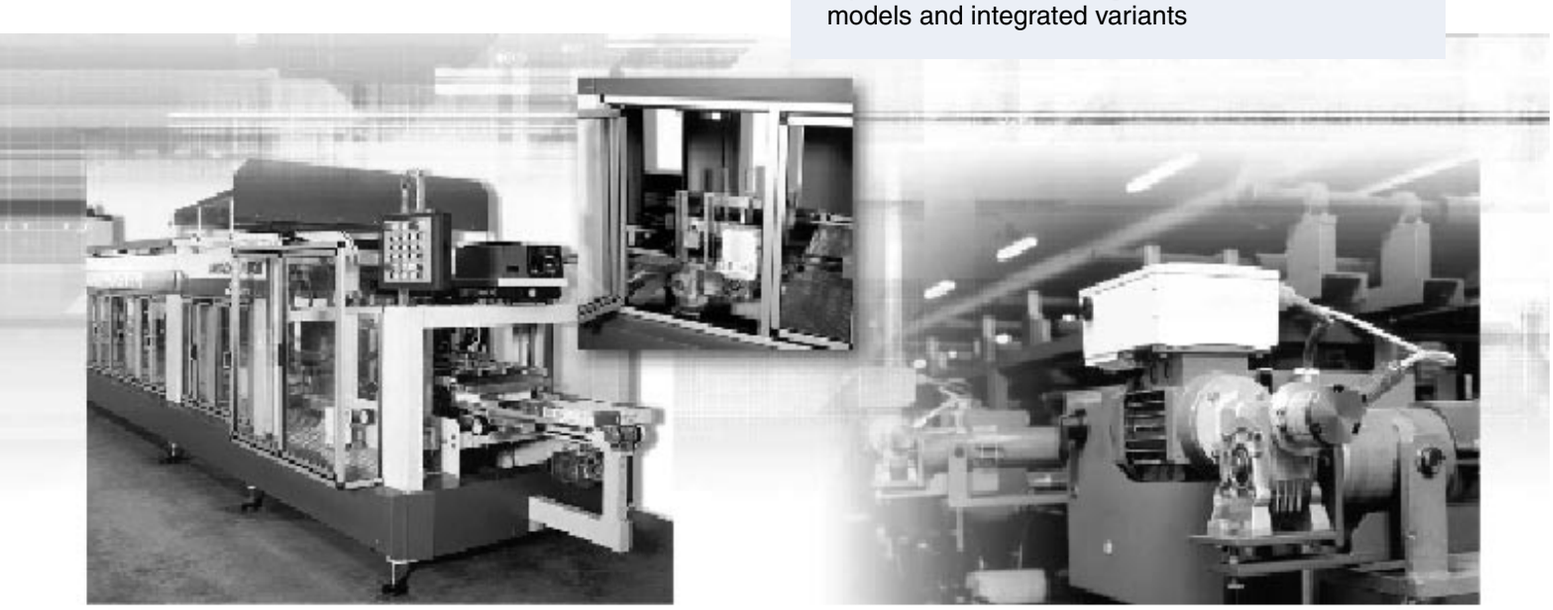

Connections

To achieve maximum compatibility the integral motor provides all necessary connections and options. Options are IP 65 protected which means that they can withstand extremely hostile environments like places with high moisture. Options are placed straight on the side of the drive and no extra installing space is required.

The various options are shown below. After the integral motor has been specified, it will be delivered as a ready assembled and parametrized unit.

With analogue inputs you can set the output frequency or control positioning speed or direction. As there are two analogue inputs, intelligent PID control is possible.

Analogue output can indicate chosen operating data values like output current or DC bus voltage.

With digital inputs the integral motor can be e.g. started, stopped or the rotation direction changed. Digital inputs are also used in positioning function.

Two relay outputs pass fault and alarm signals or indicate when selected parameter values are exceeded.

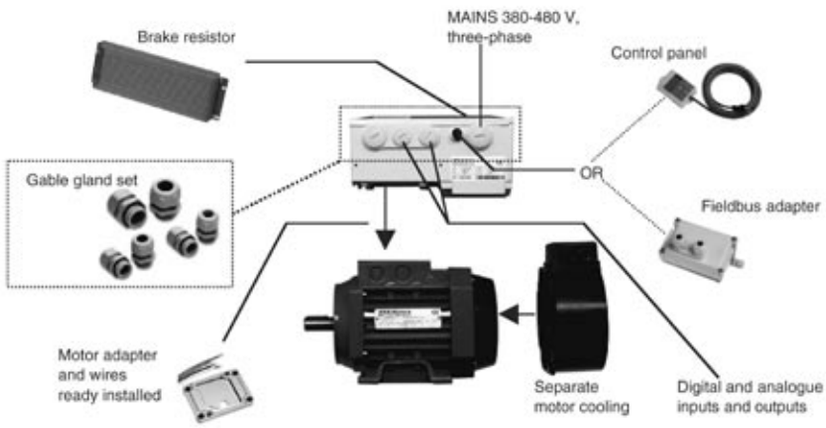

I/O Connection Examples
These connections are shown as examples only. More detailed information can be found from the frequency converter part's User's Manual.

Drive NPN connected

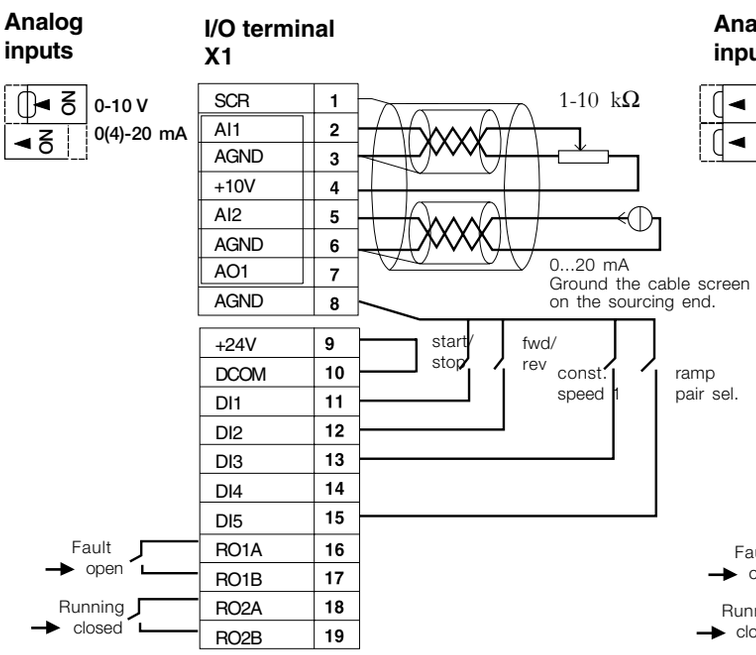

Drive PNP connected with external power supply

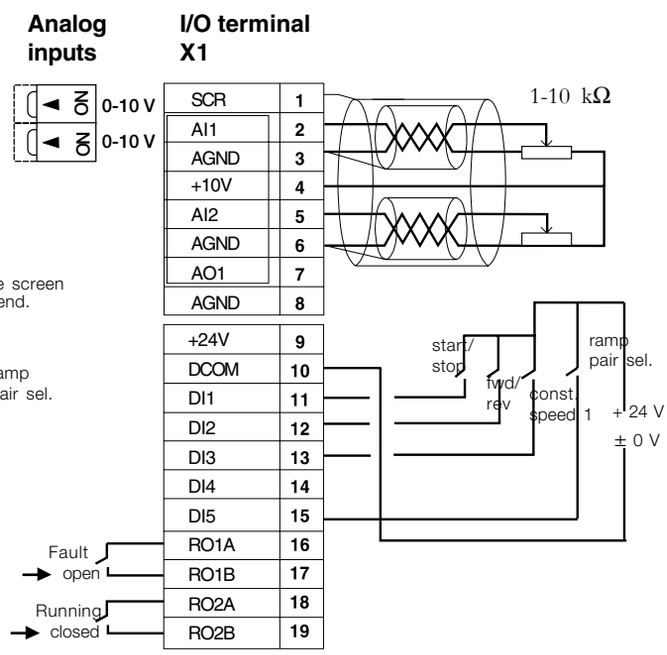

9

Ordering information

1. Standard design
When ordering an integral motor, please state the following minimum data in the order, as in the example.

2. Special designs
In addition to the minimum data all special features desired shall be stated expressly in the text of the order.

3. Note
- If the order is based on a quotation please state the number
- If the same motors were supplied before (replacement motors) please state their serial number (see motor rating plate).

Motor type	M3VK 80C
Pole number	4
Mounting arrangement (IM-code)	IM B3 (IM 1001)
Rated output	0.75 kW
Product code	3GVK082662-ASC
Variant codes if needed	
Type of drive	Standard drive

A B C D E F G

M3VK 80C 3GVK 082 662 - A S C, 450 etc.

1-4 5-6 7 8-10 11 12 13 14

A Motor type
B Motor size
C Product code
- **D** Mounting arrangement code
- **E** Voltage and frequency code
- **F** Generation code

G Variant codes

Explanation of the product code:

Positions 1 to 4
3GVK = Business area LV Motors
Totally enclosed fan cooled squirrel cage integral motor with aluminum frame

Positions 5 and 6
IEC-frame
07 = 71
08 = 80
09 = 90
10 = 100

Position 7
Speed (Pole pairs)
1 = 2 poles
2 = 4 poles
3 = 6 poles

Position 8
6 = Standard Drive
7 = Drive with RFI filter

Position 9-10 - Running number series

Position 11
- (Dash)

Position 12
Mounting arrangement
A = Foot-mounted motor.
B = Flange-mounted motor. Large flange with clearance holes.
C = Foot-mounted motor. Small flange with tapped holes.
F = Foot- and flange-mounted motor. Special flange.
H = Foot- and flange-mounted motor. Large flange with clearence holes.
J = Foot- and flange-mounted motor. Small flange with tapped holes.
V = Flange-mounted motor. Special flange.

Position 13
Voltage and frequency code
Single-speed
D = 380-420 VD 50 Hz
440-480 VD 60 Hz
S = 220-240 VD 50 Hz
380-420 VY 50 Hz
440-480 VY 60 Hz
X = Other voltage/frequency

Position 14
Generation code = A, B, C...

The product code must be, if needed, followed by variant codes.

General purpose integral motors

For constant torque applications

TEFC squirrel cage three-phase integral motors M3VK
IP55, IC 411; Insulation class F, temperature rise class B

Output kW	Type designation	Product code	Input current I_{1N} A	Cont. output current I_{2N} 1),2) A	Max. curent 150 % I_{max} 3) A	Max.starting current 180 %4) A	Over current limit (peak) A	Line fuse5) A	Power losses Power circuit W	Power losses Control circuit W	Total weight kg
3000 r/min = 2 poles		**380-480 V 50 Hz**			**Standard Drive**						
0.37	**M3VK 71A**	3GVK 071 661-••C	1.6	1.8	2.7	3.2	7.1	4	17	16	10
0.55	**M3VK 71B**	3GVK 071 662-••C	1.6	1.8	2.7	3.2	7.1	4	17	16	11
0.75	**M3VK 80A**	3GVK 081 661-••C	2.2	2.4	3.6	4.3	9.5	4	23	17	14
1.1	**M3VK 80B**	3GVK 081 662-••C	3.2	3.4	5.1	6.1	13	6	33	18	16
1.5	**M3VK 80C**	3GVK 081 663-••C	4.1	4.1	6.2	7.4	16	10	45	19	16
1.5	**M3VK 90S**	3GVK 091 661-••E	4.1	4.1	6.2	7.4	16	10	45	19	18
2.2	**M3VK 90L**	3GVK 091 662-••E	6.0	5.4	8.1	9.7	21	10	66	20	21
1500 r/min = 4 poles		**380-480 V 50 Hz**			**Standard Drive**						
0.37	**M3VK 71B**	3GVK 072 662-••C	1.6	1.8	2.7	3.2	7.1	4	17	16	11
0.55	**M3VK 80A**	3GVK 082 661-••C	1.6	1.8	2.7	3.2	7.1	4	17	16	14
0.75	**M3VK 80B**	3GVK 082 662-••C	2.2	2.4	3.6	4.3	9.5	4	23	17	15
0.95	**M3VK 80C**	3GVK 082 663-••C	3.2	3.4	5.1	6.1	13	6	33	18	16
1.1	**M3VK 90S**	3GVK 092 661-••E	3.2	3.4	5.1	6.1	13	6	33	18	18
1.5	**M3VK 90L**	3GVK 092 662-••E	4.1	4.1	6.2	7.4	16	10	45	19	21
2.2	**M3VK 100LA**	3GVK 102 661-••E	6.0	5.4	8.1	9.7	21	10	66	20	26
1000 r/min = 6 poles		**380-480 V 50 Hz**			**Standard Drive**						
0.37	**M3VK 71A**	3GVK 083 661-••C	1.6	1.8	2.7	3.2	7.1	4	17	16	14
0.55	**M3VK 80B**	3GVK 083 662-••C	1.6	1.8	2.7	3.2	7.1	4	17	16	15
0.75	**M3VK 90S**	3GVK 093 661-••E	2.2	2.4	3.6	4.3	9.5	4	23	17	18
1.1	**M3VK 90L**	3GVK 093 662-••E	3.2	3.4	5.1	6.1	13	6	33	18	21
1.5	**M3VK 100L**	3GVK 103 661-••E	4.1	4.1	6.2	7.4	16	10	45	19	28
3000 r/min = 2 poles		**380-480 V 50 Hz**			**Drive with RFI filter**						
0.37	**M3VK 71A**	3GVK 071 761-••C	1.6	1.8	2.7	3.2	7.1	4	17	18	12
0.55	**M3VK 71B**	3GVK 071 762-••C	1.6	1.8	2.7	3.2	7.1	4	17	18	13
0.75	**M3VK 80A**	3GVK 081 761-••C	2.2	2.4	3.6	4.3	9.5	4	23	19	15
1.1	**M3VK 80B**	3GVK 081 762-••C	3.2	3.4	5.1	6.1	13	6	33	20	17
1.5	**M3VK 80C**	3GVK 081 763-••C	4.1	4.1	6.2	7.4	16	10	45	21	18
1.5	**M3VK 90S**	3GVK 091 761-••E	4.1	4.1	6.2	7.4	16	10	45	21	19
2.2	**M3VK 90L**	3GVK 091 762-••E	6.0	5.4	8.1	9.7	21	10	66	22	23
1500 r/min = 4 poles		**380-480 V 50 Hz**			**Drive with RFI filter**						
0.37	**M3VK 71A**	3GVK 072 762-••C	1.6	1.8	2.7	3.2	7.1	4	17	18	13
0.55	**M3VK 80A**	3GVK 082 761-••C	1.6	1.8	2.7	3.2	7.1	4	17	18	15
0.75	**M3VK 80B**	3GVK 082 762-••C	2.2	2.4	3.6	4.3	9.5	4	23	19	16
0.95	**M3VK 80C**	3GVK 082 763-••C	3.2	3.4	5.1	6.1	13	6	33	20	17
1.1	**M3VK 90S**	3GVK 092 761-••E	3.2	3.4	5.1	6.1	13	6	33	20	19
1.5	**M3VK 90L**	3GVK 092 762-••E	4.1	4.1	6.2	7.4	16	10	45	21	22
2.2	**M3VK 100LA**	3GVK 102 761-••E	6.0	5.4	8.1	9.7	21	10	66	22	28
1000 r/min = 6 poles		**380-480 V 50 Hz**			**Drive with RFI filter**						
0.37	**M3VK 71A**	3GVK 083 761-••C	1.6	1.8	2.7	3.2	7.1	4	17	18	15
0.55	**M3VK 80B**	3GVK 083 762-••C	1.6	1.8	2.7	3.2	7.1	4	17	18	16
0.75	**M3VK 90S**	3GVK 093 761-••E	2.2	2.4	3.6	4.3	9.5	4	23	19	19
1.1	**M3VK 90L**	3GVK 093 762-••E	3.2	3.4	5.1	6.1	13	6	33	20	22
1.5	**M3VK 100L**	3GVK 103 761-••E	4.1	4.1	6.2	7.4	16	10	45	21	29

The two bullets in the product code indicate choice of mounting arrangement, voltage and nominal frequecy.

1) Power stages are designed for the continuous I_{2N} current.
These values apply at altitudes less than 1000 m ASL.
2) With 8 kHz switching frequency derate I_{2N} to 70% in -10°C...40°C or to 60% in 40°C...50°C.
3) 150 % of nominal current I_{2N} allowed for one minute every 10 minutes.
4) 180 % of nominal current I_{2N} allowed for two seconds.
5) Fuse type: UL class CC or T. For non-UL installations IEC269gG.

Use 60°C rated power cable (75°C if T_{amb} above 45°C).
Follow local rules for cable cross-sections.
Shielded motor cable is recommended.
Max. wire sizes/Power terminals (mm²):
single core: 4 (AWG 12), stranded: 2.5 (AWG 14)/torque 0.8 Nm
Max. wire sizes/Control terminals (mm²):
0.5-1.5 (AWG 22...AWG 16)/torque 0.4 Nm.

General purpose integral motors

For constant torque applications

TEFC squirrel cage three-phase integral motors M3VK
IP55, IC 411; Insulation class F, temperature rise class B

Output kW	Type designation	Product code	Input current I_{1N} A	Cont. output current I_{2N} [1] A	Max. curent 150 % I_{max} [2] A	Max.starting current 180 % [3] A	Over current limit (peak) A	Line fuse [4] A	Power losses Power circuit W	Power losses Control circuit W	Total weight kg
3000 r/min = 2 poles		**380-480 V 50 Hz**			**Standard Drive**						
1.1	**M3VK 80C**	3GVK 081 673-••C	3.2	3.4	5.1	6.1	13	6	33	18	16
1.5	**M3VK 90L**	3GVK 091 672-••E	4.1	4.1	6.2	7.4	16	10	45	19	21
2.2	**M3VK 90LB**	3GVK 091 673-••E	6.0	5.4	8.1	9.7	21	10	66	20	23
1500 r/min = 4 poles		**380-480 V 50 Hz**			**Standard Drive**						
1.1	**M3VK 90L**	3GVK 092 672-••E	3.2	3.4	5.1	6.1	13	6	33	18	21
1.5	**M3VK 100LA**	3GVK 102 671-••E	4.1	4.1	6.2	7.4	16	10	45	19	26
2.2	**M3VK 100LC**	3GVK 102 673-••E	6.0	5.4	8.1	9.7	21	10	66	20	30
3000 r/min = 2 poles		**380-480 V 50 Hz**			**Drive with RFI filter**						
1.1	**M3VK 80C**	3GVK 081 773-••C	3.2	3.4	5.1	6.1	13	6	33	20	17
1.5	**M3VK 90L**	3GVK 091 772-••E	4.1	4.1	6.2	7.4	16	10	45	21	22
2.2	**M3VK 90LB**	3GVK 091 773-••E	6.0	5.4	8.1	9.7	21	10	66	22	25
1500 r/min = 4 poles		**380-480 V 50 Hz**			**Drive with RFI filter**						
1.1	**M3VK 90L**	3GVK 092 772-••E	3.2	3.4	5.1	6.1	13	6	33	20	22
1.5	**M3VK 100LA**	3GVK 102 771-••E	4.1	4.1	6.2	7.4	16	10	45	21	27
2.2	**M3VK 100LC**	3GVK 102 773-••E	6.0	5.4	8.1	9.7	21	10	66	22	32

The two bullets in the product code indicate choice of mounting arrangement, voltage and nominal frequecy.

1) Power stages are designed for the continuous I_{2N} current.
These values apply at altitudes less than 1000 m ASL.
2) With 8 kHz switching frequency derate I_{2N} to 70% in -10°C...40°C or to 60% in 40°C...50°C.
3) 150 % of nominal current I_{2N} allowed for one minute every 10 minutes.
4) 180 % of nominal current I_{2N} allowed for two seconds.
5) Fuse type: UL class CC or T. For non-UL installations IEC269gG.

Use 60°C rated power cable (75°C if T_{amb} above 45°C).
Follow local rules for cable cross-sections.
Shielded motor cable is recommended.
Max. wire sizes/Power terminals (mm²):
single core: 4 (AWG 12), stranded: 2.5 (AWG 14)/torque 0.8 Nm
Max. wire sizes/Control terminals (mm²):
0.5-1.5 (AWG 22...AWG 16)/torque 0.4 Nm.

9

General purpose integral motors

For pump and fan use, squared torque applications

TEFC squirrel cage three-phase integral motors M3VK
IP55, IC 411; Insulation class F, temperature rise class B

Output kW	Type designation	Product code	Input current I_{1N} A	Cont. output current I_{2NSQ} 1),2),3) A	Over current limit (peak) A	Line fuse4) A	Power losses Power circuit W	Power losses Control circuit W	Total weight kg
3000 r/min = 2 poles		**380-480 V 50 Hz**		**Standard Drive**					
0.75	**M3VK 80A**	3GVK 081 861-••C	1.6	2.2	7.1	4	17	16	14
1.1	**M3VK 80B**	3GVK 081 862-••C	2.2	2.8	9.5	4	23	17	16
1.5	**M3VK 80C**	3GVK 081 863-••C	3.2	3.8	13	6	33	18	16
1.5	**M3VK 90S**	3GVK 091 861-••E	3.2	3.8	13	6	33	18	18
2.2	**M3VK 90L**	3GVK 091 862-••E	4.1	5.0	16	10	45	19	21
3.0	**M3VK 100L**	3GVK 101 861-••E	6.0	6.6	21	10	66	20	27
1500 r/min = 4 poles		**380-480 V 50 Hz**		**Standard Drive**					
0.75	**M3VK 80B**	3GVK 082 862-••C	1.6	2.2	7.1	4	17	16	15
1.1	**M3VK 90S**	3GVK 092 861-••E	2.2	2.8	9.5	4	23	17	18
1.5	**M3VK 90L**	3GVK 092 862-••E	3.2	3.8	13	6	33	18	21
2.2	**M3VK 100LA**	3GVK 102 861-••E	4.1	5.0	16	10	45	19	26
3.0	**M3VK 100LB**	3GVK 102 862-••E	6.0	6.6	21	10	66	20	30
3000 r/min = 2 poles		**380-480 V 50 Hz**		**Drive with RFI filter**					
0.75	**M3VK 80A**	3GVK 081 961-••C	1.6	2.2	7.1	4	17	18	15
1.1	**M3VK 80B**	3GVK 081 962-••C	2.2	2.8	9.5	4	23	19	17
1.5	**M3VK 80C**	3GVK 081 963-••C	3.2	3.8	13	6	33	20	18
1.5	**M3VK 90S**	3GVK 091 961-••E	3.2	3.8	13	6	33	20	19
2.2	**M3VK 90L**	3GVK 091 962-••E	4.1	5.0	16	10	45	21	22
3.0	**M3VK 100L**	3GVK 102 961-••E	6.0	6.6	21	10	66	22	28
1500 r/min = 4 poles		**380-480 V 50 Hz**		**Drive with RFI filter**					
0.75	**M3VK 80B**	3GVK 082 962-••C	1.6	2.2	7.1	4	17	18	16
1.1	**M3VK 90S**	3GVK 092 961-••E	2.2	2.8	9.5	4	23	19	19
1.5	**M3VK 90L**	3GVK 092 962-••E	3.2	3.8	13	6	33	20	22
2.2	**M3VK 100LA**	3GVK 102 961-••E	4.1	5.0	16	10	45	21	27
3.0	**M3VK 100LB**	3GVK 102 962-••E	6.0	6.6	21	10	66	22	31

The two bullets in the product code indicate choice of mounting arrangement, voltage and nominal frequecy.

1) Power stages are designed for the continuous I_{2NSQ} current.
These values apply at altitudes less than 1000 m ASL.
2) With 8 kHz switching frequency derate I_{2NSQ} to 70% in -10°C...40°C or to 60% in 40°C...50°C.
3) No overloadability
4) Fuse type: UL class CC or T. For non-UL installations IEC269gG.

Use 60°C rated power cable (75°C if T_{amb} above 45°C).
Follow local rules for cable cross-sections.
Shielded motor cable is recommended.
Max. wire sizes/Power terminals (mm^2):
single core: 4 (AWG 12), stranded: 2.5 (AWG 14)/torque 0.8 Nm.
Max. wire sizes/Control terminals (mm^2):
0.5-1.5 (AWG 22...AWG 16)/torque 0.4 Nm.

For 6 poles integral motors in Pump&Fan application select a product from General purpose codes.

9

General purpose integral motors

For pump and fan use, squared torque applications

TEFC squirrel cage three-phase integral motors M3VK
IP55, IC 411; Insulation class F, temperature rise class B

Output kW	Type designation	Product code	Input current I_{1N} A	Cont. output current I_{2NSQ} 1),2),3) A	Over current limit (peak) A	Line fuse4) A	Power losses Power circuit W	Power losses Control circuit W	Total weight kg
3000 r/min = 2 poles		**380-480 V 50 Hz**		**Standard Drive**					
1.1	**M3VK 80C**	3GVK 081 873-••C	2.2	2.8	9.5	4	23	17	16
1.5	**M3VK 90L**	3GVK 091 872-••E	3.2	3.8	13	6	33	18	21
2.2	**M3VK 90LB**	3GVK 091 873-••E	4.1	5.0	16	10	45	19	23
3.0	**M3VK 100LB**	3GVK 101 873-••E	6.0	6.6	21	10	66	20	31
1500 r/min = 4 poles		**380-480 V 50 Hz**		**Standard Drive**					
1.1	**M3VK 90L**	3GVK 092 872-••E	2.2	2.8	9.5	4	23	17	21
1.5	**M3VK 100LA**	3GVK 102 871-••E	3.2	3.8	13	6	33	18	26
2.2	**M3VK 100LC**	3GVK 102 873-••E	4.1	5.0	16	10	45	19	30
3000 r/min = 2 poles		**380-480 V 50 Hz**		**Drive with RFI filter**					
1.1	**M3VK 80C**	3GVK 081 973-••C	2.2	2.8	9.5	4	23	19	17
1.5	**M3VK 90L**	3GVK 091 972-••E	3.2	3.8	13	6	33	20	22
2.2	**M3VK 90LB**	3GVK 091 973-••E	4.1	5.0	16	10	45	21	24
3.0	**M3VK 100LB**	3GVK 101 973-••E	6.0	6.6	21	10	66	22	31
1500 r/min = 4 poles		**380-480 V 50 Hz**		**Drive with RFI filter**					
1.1	**M3VK 90L**	3GVK 092 972-••E	2.2	2.8	9.5	4	23	19	22
1.5	**M3VK 100LA**	3GVK 102 971-••E	3.2	3.8	13	6	33	20	27
2.2	**M3VK 100LC**	3GVK 102 973-••E	4.1	5.0	16	10	45	21	31

The two bullets in the product code indicate choice of mounting arrangement, voltage and nominal frequecy.

1) Power stages are designed for the continuous I_{2NSQ} current.
These values apply at altitudes less than 1000 m ASL.
2) With 8 kHz switching frequency derate I_{2NSQ} to 70% in -10°C...40°C or to 60% in 40°C...50°C.
3) No overloadability
4) Fuse type: UL class CC or T. For non-UL installations IEC269gG.

Use 60°C rated power cable (75°C if T_{amb} above 45°C).
Follow local rules for cable cross-sections.
Shielded motor cable is recommended.
Max. wire sizes/Power terminals (mm^2):
single core: 4 (AWG 12), stranded: 2.5 (AWG 14)/torque 0.8 Nm.
Max. wire sizes/Control terminals (mm^2):
0.5-1.5 (AWG 22...AWG 16)/torque 0.4 Nm.

For 6 poles integral motors in Pump&Fan application select a product from General purpose codes.

9

Technical Specification for Frequency Converter

Mains connection
Power renge: 0.55 - 3.0 kW
Voltage: 3-phase, 380 to 480 V ± 10 %
Frequency: 48 to 63 Hz
Power factor: 0.98

Motor connection
Voltage: 3-phase, from 0 to U_{supply}
Frequency: 0 to 250 Hz

Constant torque applications
Continuous loading capability:
- Rated output current I_{2N}

Overload capacity (max. ambient temperature of 40°C):
- At constant torque: 1.5 · I_{2N} for one minute every 10 minutes
- Starting torque: 1.8 · I_{2N} for two seconds
  Characteristic data for short time, intermittent and periodic load cycles are available on request.

Switching frequency:
- Standard 4 kHz
- Low noise 8 kHz *)

Squared torque applications
Continuous loading capability:
- Rated output current I_{2NSQ}

No overload capacity
Switching frequency:
- Standard 4 kHz
- Low noise 8 kHz *), with derating

Programmable control connections
Two analogue inputs:
- Voltage signal: 0 (2) to 10 V, 200 kΩ single ended
- Current signal: 0 (4) to 20 mA, 500 Ω single ended
- Potentiometer reference: 10 V ± 2 % max. 10 mA, 1 kΩ ≤ R ≥ 10kΩ
- Response time: < 64 ms
- Resolution: 0.1 %
- Accuracy: ± 1 %

One analogue output: 0 (4) to 20 mA, load < 500 Ω
Auxiliary voltage: 24 V DC, max 180 mA
Five digital inputs: 12-24 V DC with internal or external supply, PNP and NPN logic
- Input impedance: 1.5 kΩ
- Response time: < 5 ms

Two relay outputs:
- Switching voltage:12 to 250V AC or max.30 V DC/0.5 A
- Max. continuous current: 10 mA to 2 A

Built-in brake chopper
Pulse encoder: Connected to digital inputs DI4 and DI5, max. 25 V DC / 100 mA, max. pulse frequency 200 kHz
Serial communication for external control:
- Modbus protocol as standard, other fieldbus options available: PROFIBUS-DP, InterBus-S, DeviceNet, CANOpen, LonWorks®

Programmable features *)
Nine application macros for easy configuration:
- Factory, ABB Standard, 3-Wire, Alternate, Motor Potentiometer, Hand-Auto, PID-Control, Pre-magnetize, Positioning

Acceleration time: 0.1 to 1800 s
Deceleration time: 0.1 to 1800 s
Skip frequencies: Two bands
Start and stop: Flying start, Torque boosting, Premagnetising function, DC hold function, DC injection braking
Functions:
- Output current and frequency limit, Programmable volts/herz ratio, IR compensation, Slip compensation, PID-control with sleep function, Seven preset speeds, Automatic fault reset, Two acceleration and two deceleration ramps, Control for electromechanical brake

Protection
Limits
- Over current trip limit: 3.5 · I_2
- DC current regulation limit: 0.5...1.5 · I_2
- DC over voltage trip limit: 875 V
- DC under voltage trip limit: 333 V
- Power-loss ride-through: 500 ms
- Over temperature limit: 105°C inside power module

Inverter protection:
- Output short circuit, Input phase loss, Inverter overload, Output earth-fault, Serial communication error, Loss of AI signal, I/O terminal short circuit, Auxiliary voltage short circuit, Brake resistor overload

Motor protection:
- Stall protection, Over temperature protection by I^2t estimation or PTC thermistors.

Environmental limits
Ambient operating temperature:
- Output current = I_{2N} and f_{switch} = 4 kHz: -10 to 40°C
- Output current = 0.7 · I_{2N} and f_{switch} = 8 kHz: -10 to 40°C
- Output current = 0.6 · I_{2N} and f_{switch} = 8 kHz: 40 to 50°C
- Output current = I_{2NSQ} and f_{switch} = 4 kHz: -10 to 40°C
- Output current = 0.7 · I_{2NSQ} and f_{switch} = 8 kHz: -10 to 40°C
- Output current = 0.6 · I_{2NSQ} and f_{switch} = 8 kHz: 40 to 50°C
- Refer to page 16 for more derating information

Installation altitude:
- Output current = I_2: 0 to 1000 m
- Output current reduced by 1% for every 100 m above 1000 m. Max altitude 2000 m.

Protection class: IP 65
Colour: NCS 1502-Y, RAL 9002, PMS 420 C
Contamination levels: According to IEC-721-3-3

Electromagnetic Compatibility (EMC):
- Standard Drive: Fulfils EN 61800-3 2nd Environment distribution limits
- Drive with RFI filter: Fulfils EN 61800-3 1st and 2nd Environment distribution limits

Harmonic emissions:
- Units with < 1 kW input power fulfil EN 61000-3-2
- Units with > 1 kW input power are to be used only in professional applications

Product compliance
- Low Voltage Directive 73/23/EEC with amendments
- EMC Directive 89/336/EEC with amendments
- Quality Assurance systems ISO 9001 and ISO 14001
- CE, UL, cUL and C-Tick approvals

**) Adjustable only with control panel.*

Frequency Converter Options

IP 65 Control Panel Kit
Variant code: 611
Full configurable functionality is available when using the optional control panel. With the control panel, parameters can be exchanged between two drives using the parameter upload/download procedure.

Fieldbus Gateways and RS485/232 Adapter
Variant code: see the table below
The integral motor can be connected to all major automation systems with the help of the large variety of fieldbuses. The fieldbus gateways are available in robust IP 65 boxes, which can be conveniently fitted on one side of the drive. The Modbus protocol is standard in all integral motor units and can be used by means of an RS485/232 adapter (CFB-RS).

Fieldbus technical data

Fieldbus	Type code	Variant code	Protocol mode	Device profile	Baudrate (min.-max.)
PROFIBUS	CFB-PDP	612	DP	Profidrive V.2	9.6 kbits/s - 12 Mbits/s
InterBus-S	CFB-IBS	613	PCP	Drivecom (Profile 21)	500 kbits/s
DeviceNet	CFB-DEV	616	N.A.	AC Drive	125 - 500 kbits/s
CANOpen	CFB-CAN	614	N.A.	Drives and Motion control (DS402 V.1.1)	10 - 1000 kbits/s
LonWorks®	CFB-LON	615	LonTalk®	Variable Speed Motor Drive 6010	78 kbits
Modbus	CFB-RS	617	RTU	Vendor Specific	300 - 19200 bit/s

N.A. = Not applicable

Integral Brake Resistors
Variant code: see the table below
The integral motor brake resistor offers an optimal solution for braking, as braking choppers are a standard feature of the drives. The IP 65 brake resistors can be fitted on one side of the integral motor.

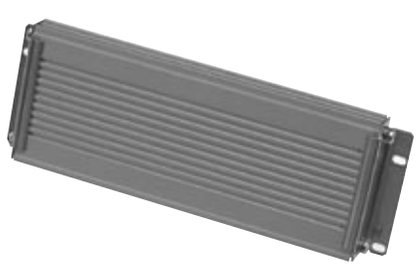

Brake resistor technical data

Integral motor output kW (general purpose ratings)	Brake resistor Type code	Variant code	Resistance Ohm W	Max. average resistor power W	Max. instantaneous resistor power
0.37...0.55 kW	CA-BRK-R1-1	618	390	39	700
0.75 kW	CA-BRK-R1-1	618	390	39	950
1.1 kW	CA-BRK-R1-2	619	125	39	1500
1.5 kW	CA-BRK-R1-2	619	125	39	2100
2.2 kW	CA-BRK-R2	620	125	45	3080

Cable gland set
Variant code: 230
A selection of cable glands for integral motor. The glands are for the following cable diameters: 5-9 mm (2 pcs), 6-12 mm (2 pcs) and 9-16 mm (2 pcs).

More options for frequency converter available separately
- AnyBus Communicator fieldbus gateways (Profibus-DP and DeviceNet)
- DriveWindow Light 2 start-up and maintenance PC tool.

General purpose integral motors
Variant codes, motor part

S = Included as standard.
NA = Not applicable.
R = On request.
P = New manufacture only.

Code	Variant	Frame size 71	80	90	100
	Balancing				
052	Balancing to grade R (IEC 60034-14).	P	P	P	P
423	Balanced without key.	P	P	P	P
424	Full key balancing.	P	P	P	P
	Bearings and lubrication				
040	Heat resistant grease. (-25 - +150°C)	P	P	P	P
042	Locked drive-end.	P	P	S	S
057	2RS bearings at both ends.	P	P	P	P
	Branch standard designs				
178	Stainless steel/acid proof bolts.	P	P	P	P
425	Corrosion protected stator and rotor core.	P	P	P	P
	Cooling system				
068	Metal fan.	P	P	P	P
183	Separate motor cooling (fan axial, N-end).	P	P	P	P
	Drain holes				
065	Plugged drain holes.	P	P	NA	NA
066	Modified drain hole position.	P	P	P	P
076	Draining holes with plugs.	S	S	S	S
	Earthing bolt				
067	External earthing bolt.	P	P	P	P
	Heating elements				
450	Heating element, 100-120 V.	P	P	P	P
451	Heating element, 200-240 V.	P	P	P	P
	Mounting arrangements				
007	IM 3001 flange mounted, IEC flange, from IM 1001 (B5 from B3).	P	P	P	P
008	IM 2101 foot/flange mounted, from IM 1001 (B34 from B3).	P	P	P	P
009	IM 2001 foot/flange mounted, from IM 1001 (B35 from B3).	P	P	P	P
047	IM 3601 flange mounted, IEC flange, from IM 3001 (B14 from B5).	P	P	P	P
048	IM 3001 flange mounted, IEC flange, from IM 3601 (B14 from B5).	P	P	P	P
	Painting				
114	Special paint colour, standard grade. RAL-colour no. must be specified.	P	P	P	P

General purpose integral motors
Variant codes, motor part

S = Included as standard.
NA = Not applicable.
R = On request.
P = New manufacture only.

Code	Variant	Frame size 71	80	90	100
	Protection				
005	Protective roof, vertical motor, shaft down.	P	P	P	P
073	Sealed against oil at D-end.	P	P	P	P
158	Degree of protection IP 65.	P	P	P	P
	Rating & instruction plates				
003	Individual serial number.	P	P	P	P
013	Restamping to output for class F temperature rise.	P	P	P	P
098	Stainless rating plate.	P	P	P	P
138	Mounting of additional identification plate, aluminum.	P	P	P	P
	Shaft & Rotor				
069	Two shaft extensions as per basic catalogue	P	P	P	P
165	Shaft extension with open key way	R	R	R	R
410	Stainless / acid proof steel shaft (standard or non-standard design)	P	P	P	P
	Standards and regulations				
029	Fulfilling Underwriters Laboratory (UL) requirements	R	R	R	R
	Stator winding temperature sensors				
436	PTC-thermistors (3 in series), 150°C	P	P	P	P
	Testing				
140	Test confirmation	R	R	R	R
	Variable speed drives				
470	Prepared for hollow shaft pulse tacho (L&L equivalent)	P	P	P	R
473	2048 pulse tacho (L&L equivalent)	P	P	P	R
477	Separate motor cooling (fan axial, N-end) and 2048 pulse tacho (L&L equivalent)	P	P	P	R

General purpose integral motors Variant codes, frequency converter part

S = Included as standard.
NA = Not applicable.
R = On request.
P = New manufacture only.

Code	Variant	Frame size 71	80	90	100
	Unit body				
230	Standard cable gland set	P	P	P	P
	Brake resistor				
618	Inverter brake resistor for 0.37 kW, 0.55 kW & 0.75 kW unit (general purpose ratings)	P	P	P	NA
619	Inverter brake resistor for 1.1 kW & 1.5 kW unit (general purpose ratings)	NA	P	P	P
620	Inverter brake resistor for 2.2 kW unit (general purpose ratings)	NA	NA	P	P
	Panel kit				
611	Inverter control panel kit	P	P	P	P
	Fieldbus type				
612	CFB-PDP	P	P	P	P
613	CFB-IBS	P	P	P	P
614	CFB-CAN	P	P	P	P
615	CFB-LON	P	P	P	P
616	CFB-DEV	P	P	P	P
617	CFB-RS	P	P	P	P

Derating Information

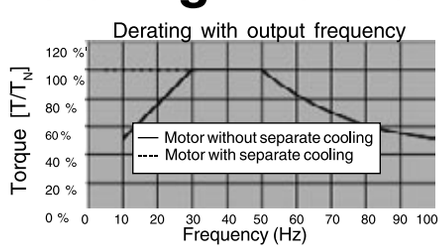

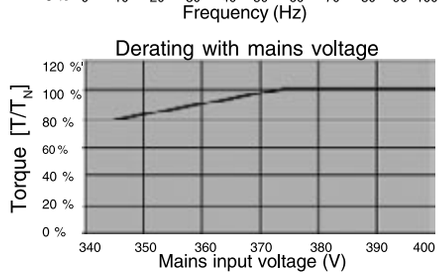

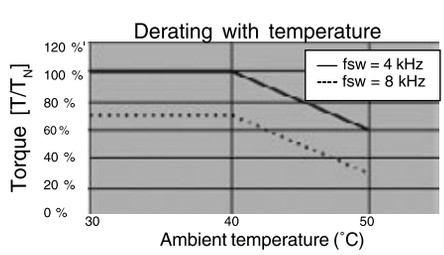

If the integral motor is used at low frequencies, separate cooling is recommended, particularly if the motor load is high and the speed is low.

M3VK

M3VK with separate cooling unit

Cooling unit

9

General purpose integral motors

Dimensions

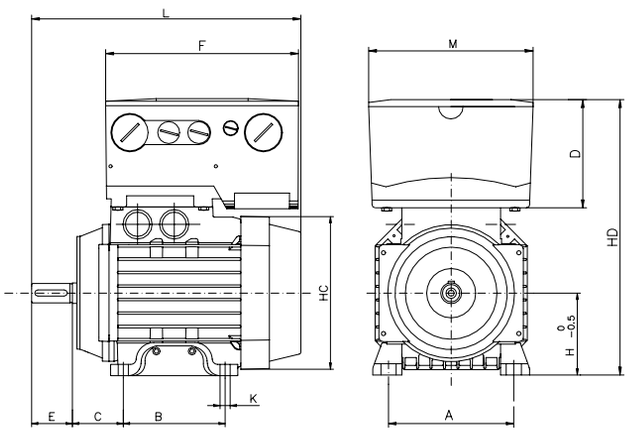

Dimensions with integrated options added

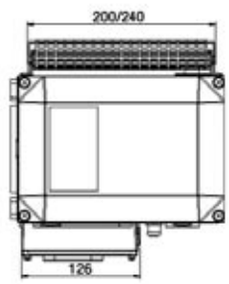

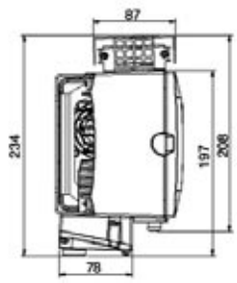

EFF2

Integral Motor Standard Drive	Product Code Drive with RFI filter	Dimensions A	B	C	E	H	HC	K	L	D std*	D w RFI*	HD std*	HD w RFI*	F	M
3GVK 071 661-••C	3GVK 071 761-••C	112	90	45	30	71	130	7	283	110	146	261	297	221	171
3GVK 071 662-••C	3GVK 071 762-••C	112	90	45	30	71	130	7	283	110	146	261	297	221	171
3GVK 081 661-••C	3GVK 081 761-••C	125	100	50	40	80	150	10	275	110	146	280	316	221	171
3GVK 081 662-••C	3GVK 081 762-••C	125	100	50	40	80	150	10	275	110	146	280	316	221	171
3GVK 081 663-••C	3GVK 081 763-••C	125	100	50	40	80	150	10	275	110	146	280	316	221	171
3GVK 091 661-••C	3GVK 091 761-••C	140	100	56	50	90	170	10	282	110	146	300	336	221	171
3GVK 091 662-••C	3GVK 091 762-••C	140	125	56	50	90	170	10	307	110	146	300	336	261	171
3GVK 072 662-••C	3GVK 072 762-••C	112	90	45	30	71	130	7	283	110	146	261	297	221	171
3GVK 082 661-••C	3GVK 082 761-••C	125	100	50	40	80	150	10	275	110	146	280	316	221	171
3GVK 082 662-••C	3GVK 082 762-••C	125	100	50	40	80	150	10	275	110	146	280	316	221	171
3GVK 082 663-••C	3GVK 082 763-••C	125	100	50	40	80	150	10	275	110	146	280	316	221	171
3GVK 092 661-••C	3GVK 092 761-••C	140	100	56	50	90	170	10	282	110	146	300	336	221	171
3GVK 092 662-••C	3GVK 092 762-••C	140	125	56	50	90	170	10	307	110	146	300	336	221	171
3GVK 102 661-••C	3GVK 102 761-••C	160	140	63	60	100	190	12	349	110	146	310	346	261	171
3GVK 083 661-••C	3GVK 083 761-••C	125	100	50	40	80	150	10	275	110	146	280	316	221	171
3GVK 083 662-••C	3GVK 083 762-••C	125	100	50	40	80	150	10	275	110	146	280	316	221	171
3GVK 093 661-••C	3GVK 093 761-••C	140	100	56	50	90	170	10	282	110	146	300	336	221	171
3GVK 093 662-••C	3GVK 093 762-••C	140	125	56	50	90	170	10	307	110	146	300	336	221	171
3GVK 103 661-••C	3GVK 103 761-••C	160	140	63	60	100	190	12	349	110	146	310	346	221	171

* std = Standard Drive, w RFI = Drive with RFI filter

EFF1

Integral Motor Standard Drive	Product Code Drive with RFI filter	Dimensions A	B	C	E	H	HC	K	L std*	D w RFI*	D std	HD w RFI*	HD	F	M
3GVK 081 673-••C	3GVK 081 773-••C	125	100	50	40	80	150	10	275	110	146	280	316	221	171
3GVK 091 672-••C	3GVK 091 772-••C	140	125	56	50	90	170	10	307	110	146	300	336	221	171
3GVK 091 673-••C	3GVK 091 773-••C	140	125	56	50	90	170	10	307	110	146	300	336	261	171
3GVK 092 672-••C	3GVK 092 772-••C	140	125	56	50	90	170	10	307	110	146	300	336	221	171
3GVK 102 671-••C	3GVK 102 771-••C	160	140	63	60	100	190	12	349	110	146	310	346	221	171
3GVK 102 673-••C	3GVK 102 773-••C	160	140	63	60	100	190	12	349	110	146	310	346	261	171

* std = Standard Drive, w RFI = Drive with RFI filter

General purpose integral motors

Dimensions in pump and fan use

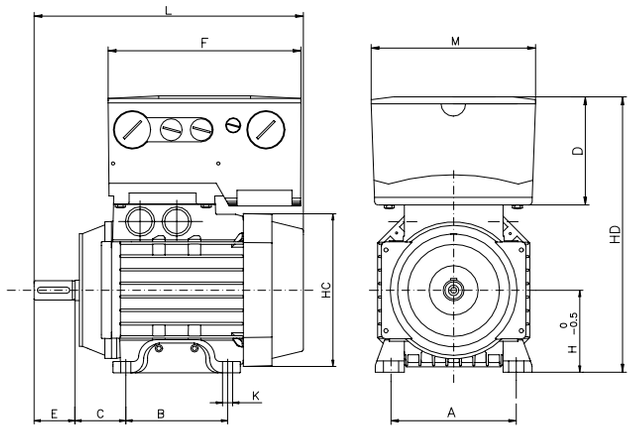

Dimensions with integrated options added

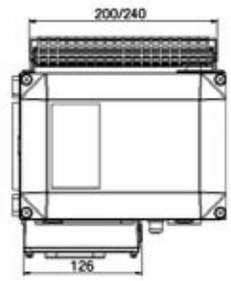

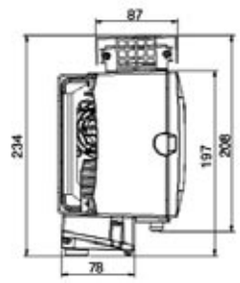

Integral Motor Standard Drive	Product Code Drive with RFI filter	Dimensions A	B	C	E	H	HC	K	L	D std*	D w RFI*	HD std*	HD w RFI*	F	M
3GVK 081 861-••C	3GVK 081 961-••C	125	100	50	40	80	150	10	275	110	146	280	316	221	171
3GVK 081 862-••C	3GVK 081 962-••C	125	100	50	40	80	150	10	275	110	146	280	316	221	171
3GVK 081 863-••C	3GVK 081 963-••C	125	100	50	40	80	150	10	275	110	146	280	316	221	171
3GVK 091 861-••C	3GVK 091 961-••C	140	100	56	50	90	170	10	282	110	146	300	336	221	171
3GVK 091 862-••C	3GVK 091 962-••C	140	125	56	50	90	170	10	307	110	146	300	336	221	171
3GVK 101 861-••C	3GVK 101 961-••C	160	140	63	60	100	190	12	349	110	146	310	346	261	171
3GVK 082 862-••C	3GVK 082 962-••C	125	100	50	40	80	150	10	275	110	146	280	316	221	171
3GVK 092 861-••C	3GVK 092 961-••C	140	100	56	50	90	170	10	282	110	146	300	336	221	171
3GVK 092 862-••C	3GVK 092 962-••C	140	125	56	50	90	170	10	307	110	146	300	336	221	171
3GVK 102 861-••C	3GVK 102 961-••C	160	140	63	60	100	190	12	349	110	146	310	346	221	171
3GVK 102 862-••C	3GVK 102 961-••C	160	140	63	60	100	190	12	349	110	146	310	346	261	171

* std = Standard Drive, w RFI = Drive with RFI filter

Integral Motor Standard Drive	Product Code Drive with RFI filter	Dimensions A	B	C	E	H	HC	K	L std*	D w RFI*	D	HD std	HD w RFI*	F	M
3GVK 081 873-••C	3GVK 081 973-••C	125	100	50	40	80	150	10	275	110	146	280	316	221	171
3GVK 091 872-••C	3GVK 091 972-••C	140	125	56	50	90	170	10	307	110	146	300	336	221	171
3GVK 091 873-••C	3GVK 091 973-••C	140	125	56	50	90	170	10	307	110	146	300	336	221	171
3GVK 101 873-••C	3GVK 101 973-••C	160	140	63	60	100	190	12	349	110	146	310	346	261	171
3GVK 092 872-••C	3GVK 092 972-••C	140	125	56	50	90	170	10	307	110	146	300	336	221	171
3GVK 102 871-••C	3GVK 102 971-••C	160	140	63	60	100	190	12	349	110	146	310	346	221	171
3GVK 102 873-••C	3GVK 102 973-••C	160	140	63	60	100	190	12	349	110	146	310	346	221	171

* std = Standard Drive, w RFI = Drive with RFI filter

Notes:

Notes:

ABB Motors' total product offer

ABB offers several comprehensive ranges of AC motors and generators.
We manufacture synchronous motors for even the most demanding applications, and a full range of low and high voltage induction motors.
Our in-depth knowledge of virtually every type of industrial processing ensures we always specify the best solution for your needs.

Low voltage motors and generators

General purpose motors for standard applications
– Aluminum motors
– Steel motors
– Cast iron motors
– Open drip proof motors
– Global motors
– Brake motors
– Single phase motors
– Integral motors

Process performance motors for more demanding applications
– Aluminum motors
– Cast iron motors
– Motors for high ambient temperatures

NEMA motors

Motors for hazardous areas
– Flameproof motors
– Increased safety motors
– Non-sparking motors
– Dust ignition proof motors

Marine motors
– Aluminum motors
– Steel motors
– Cast iron motors
– Open drip proof motors

Other applications
– Permanent magnet motors
– High speed motors
– Wind turbine generators
– Smoke venting motors
– Water cooled motors
– Motors for roller table drives

High voltage and synchronous motors and generators

– High voltage cast iron motors
– Induction modular motors
– Slip ring motors
– Motors for hazardous areas
– Servomotors
– Synchronous motors and generators
– DC motors and generators

Visit our web site

www.abb.com/motors&drives

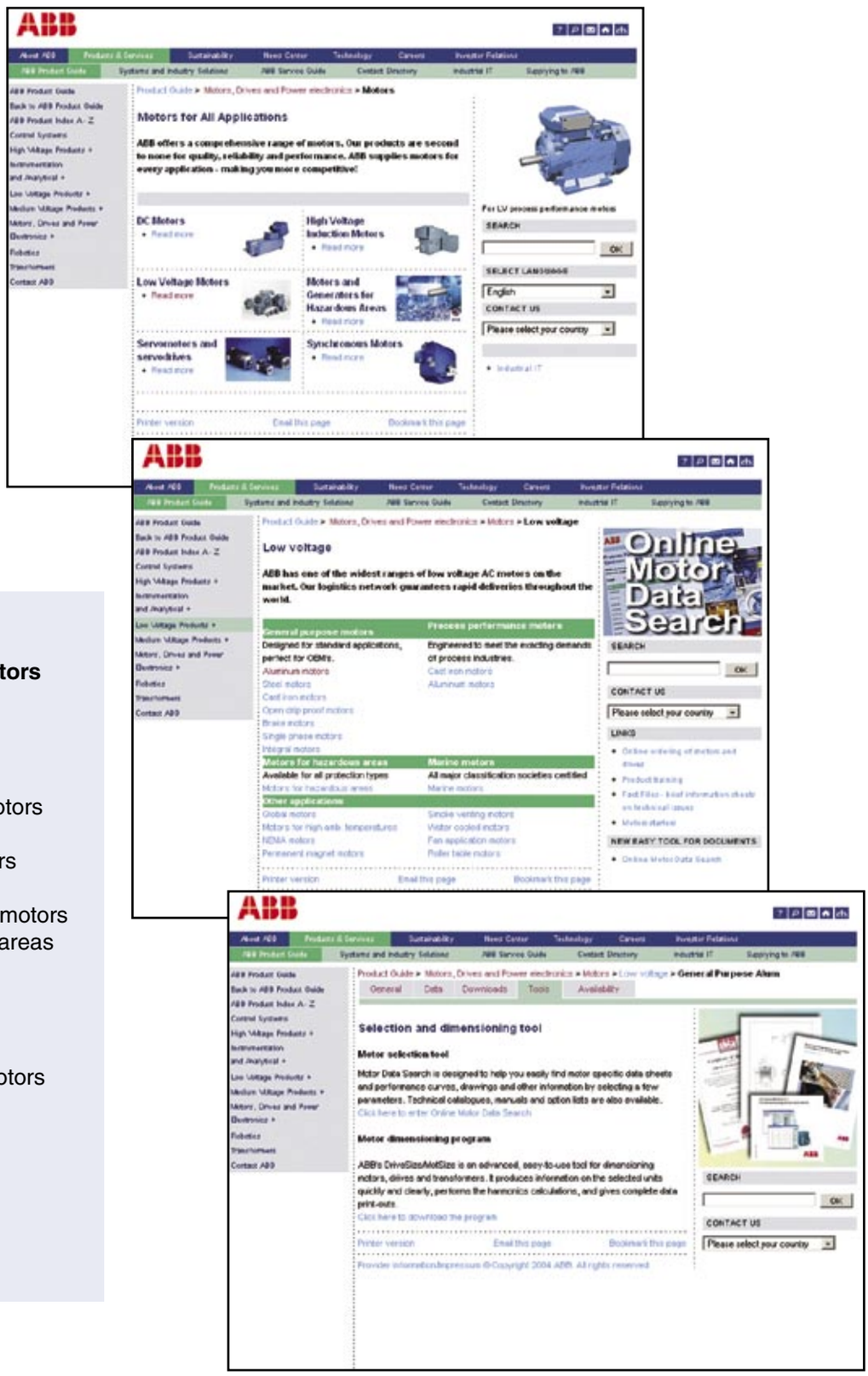

Motors & Drives
=> Low Voltage Motors
=> General purpose motors
- Aluminum motors
- Steel motors
- Cast iron motors
- Global motors
- Open drip proof motors
- Brake motors
- Single phase motors
- Integral motors

Process performance motors
Motors for hazardous areas
Marine motors
Other applications
Roller table motors
Water cooled motors
Permanent magnet motors
High speed motors
Generators

Low Voltage Motors

Manufacturing sites (*) and some of the larger sales companies.

Australia
ABB Industry Pty Ltd
2 Douglas Street
Port Melbourne,
Victoria, 3207
Tel: +61 (0) 3 9644 4100
Fax: +61 (0) 3 9646 9362

Austria
ABB AG
Clemens Holgmeisterstrasse 11 B
AT-1810 Wien
Tel: +43 (0) 1 601 090
Fax: +43 (0) 1 601 09 8305

Belgium
Asea Brown Boveri S.A.-N.V.
Hoge Wei 27
BE -1930 Zaventem
Tel: +32 (0) 2 718 6311
Fax: +32 (0) 2 718 6657

Canada
ABB Inc., BA Electrical Machines
10300 Henri-Bourassa Blvd, West,
Saint-Laurent, Quebec
Canada H4S 1N6
Tel: +1 514 832-6583
Fax: +1 514 332-0609

China*
ABB Shanghai Motors
Company Limited
8 Guang Xing Rd.,Rong Bei
Town, Songjiang County,
Shanghai 201613
Tel: +86 21 5778 0988
Fax: +86 21 5778 1364

Chile
Asea Brown Boveri S.A.
P.O.Box 581-3
Santiago
Tel: +56 (0) 2 5447 100
Fax: +56 (0) 2 5447 405

Denmark
ABB A/S
Automation Technology Electrical
Machines
Petersmindevej 1
DK-5000 Odense C
Tel: +45 65 477 070
Fax: +45 65 477 713

Finland*
ABB Oy
LV Motors
P.O.Box 633
FI-65101 Vaasa
Tel: +358 (0) 10 22 11
Fax: +358 (0) 10 22 47372

France
ABB Automation
Rue du Général de Gaulle
Champagne-sur-Seine
FR-77811 Moret-sur-Loing Cedex
Tel: +33 (0) 1 60 746 500
Fax: +33 (0) 1 60 746 565

Germany
ABB Automation Products GmbH
Edisonstrasse 15
DE-68623 Lampertheim
Tel: +49 (0) 6206 503 503
Fax: +49 (0) 6206 503 600

Hong Kong
ABB (Hong Kong) Ltd.
Tai Po Industrial Estate,
3 Dai Hei Street,
Tai Po, New Territories,
Hong Kong
Tel: +852 2929 3838
Fax: +852 2929 3505

India*
ABB Ltd.
32, Industrial Area, N.I.T
Faridabad 121 001
Tel: +91 (0) 129 502 3001
Fax: +91 (0) 129 502 3006

Indonesia
PT. ABB Sakti Industri
JL. Gajah Tunggal Km.1
Jatiuwung, Tangerang 15136
Banten, Indonesia
Tel: + 62 21 590 9955
Fax: + 62 21 590 0115 - 6

Ireland
Asea Brown Boveri Ltd
Components Division
Belgard Road
Tallaght, Dublin 24
Tel: +353 (0) 1 405 7300
Fax: +353 (0) 1 405 7327

Italy*
ABB SACE SpA
LV Motors
Via Della Meccanica, 22
IT-20040 Caponago - MI
Tel: +39 02 959 6671
Fax: +39 02 959 667216

Japan
ABB K.K.
26-1 Cerulean Tower
Sakuragaoka-cho, Shibuya-ku
Tokyo 150-8512
Tel: +81 (0) 3 578 46251
Fax: +81 (0) 3 578 46260

Korea
ABB Korea Ltd.
7-9fl, Oksan Bldg., 157-33
Sungsung-dong, Kangnam-ku
Seoul
Tel: +82 2 528 2329
Fax: +82 2 528 2338

Malaysia
ABB Malaysia Sdn. Bhd.
Lot 608, Jalan SS 13/1K
47500 Subang Jaya, Selangor
Tel: +60 3 5628 4888
Fax: +60 3 5631 2926

Mexico
ABB México, S.A. de C.V.
Apartado Postal 111
CP 54000 Tlalnepantla
Edo. de México, México
Tel: +52 5 328 1400
Fax: +52 5 390 3720

The Netherlands
ABB B.V.
Dept. LV motors (APP2R)
P.O.Box 301
NL-3000 AH Rotterdam
Tel: +31 (0) 10 4078 879
Fax: +31 (0) 10 4078 345

Norway
ABB AS
P.O.Box 154 Vollebekk
NO-0520 Oslo
Tel: +47 22 872 000
Fax: +47 22 872 541

Singapore
ABB Industry Pte Ltd
2 Ayer Rajah Crescent
Singapore 139935
Tel: +65 6776 5711
Fax: +65 6778 0222

Spain*
ABB Automation Products S.A.
Division Motores
P.O.Box 81
ES-08200 Sabadell
Tel: +34 93 728 8500
Fax: +34 93 728 8741

Sweden*
ABB Automation Technologies AB
LV Motors
SE-721 70 Västerås
Tel: +46 (0) 21 329 000
Fax: +46 (0) 21 329 140

Switzerland
ABB Schweiz AG
Normelec
Badenerstrasse 790
Postfach
CH-8048 Zürich
Tel: +41 (0) 58 586 0000
Fax: +41 (0) 58 586 0603

Taiwan
ABB Ltd.
6F, No. 126, Nanking East Road,
Section 4i
Taipei, 105 Taiwan, R.O.C.
Tel: +886 (0) 2 2577 6090
Fax: +886 (0) 2 2577 9467

Thailand
ABB Limited (Thailand)
161/1 SG Tower,
Soi Mahadlekluang 3,
Rajdamri, Bangkok 10330
Tel: +66 2 665 1000
Fax: +66 2 665 1042

The United Kingdom
ABB Automation Ltd
9 The Towers, Wilmslow Road
Didsbury
Manchester, M20 2AB
Tel: +44 (0) 161 445 5555
Fax: +44 (0) 161 448 1016

USA
ABB Inc.
Low Voltage Motors
16250 W. Glendale Drive
New Berlin, WI 53151
Tel: +1 262 785 3200
Fax: +1 262 785 8628

Venezuela
Asea Brown Boveri S.A.
P.O.Box 6649
Carmelitas,
Caracas 1010A
Tel: +58 (0) 2 238 2422
Fax: +58 (0) 2 239 6383

http://www.abb.com/motors&drives
http://online.abb.com/motors&drives

Printed in Finand, 12-2004/10000,Waasa Graphics

Catalogue BU/General purpose motors GB 12-2004