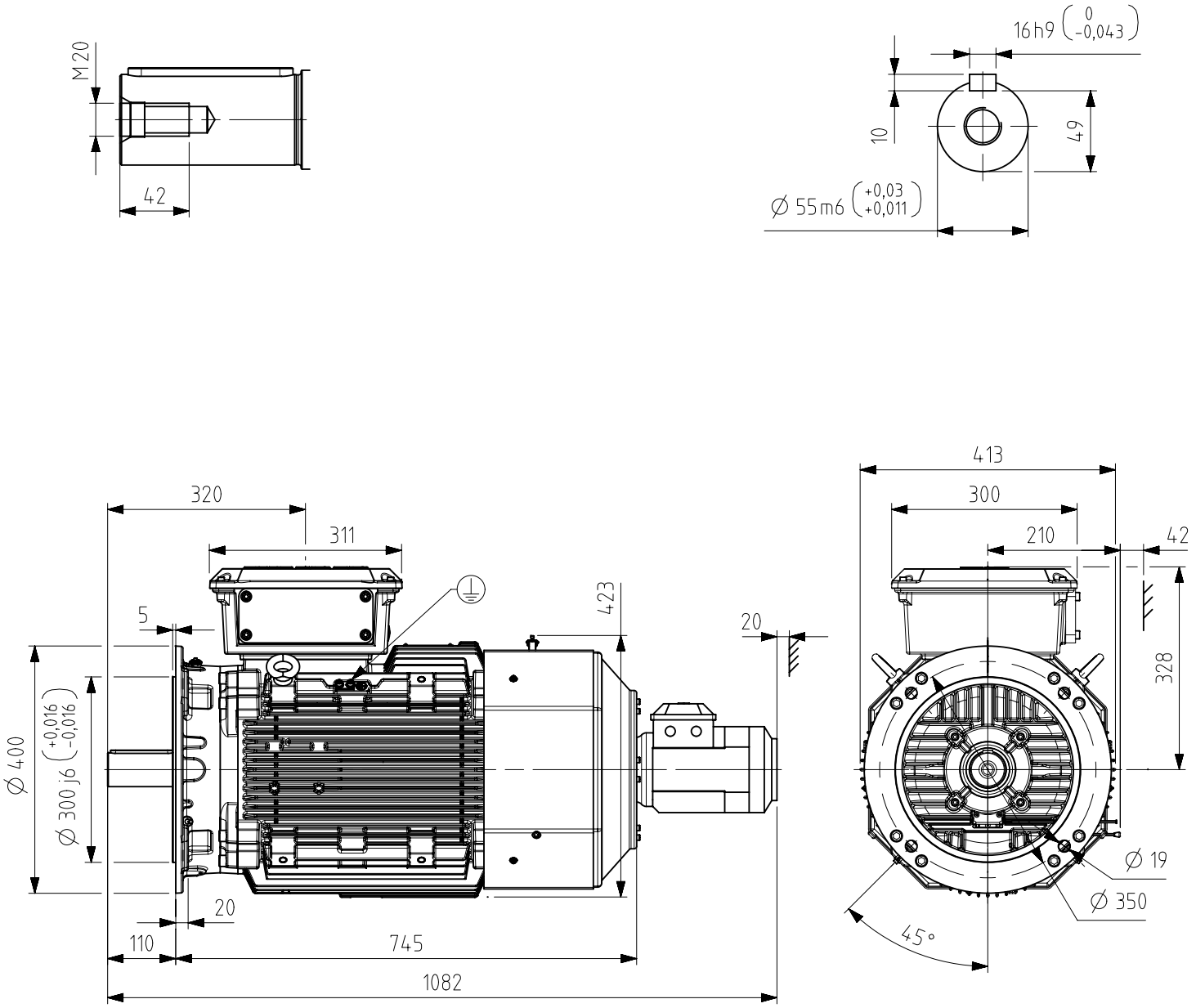

Additional information:

Dimension Print	Motor type: M3BP200 (G/K/L/M) ML_2-8; B5, V1, V3 M3GP200 (D/K/L) ML_2-8; B5, V3	Document No: 3GZF500020-596 A

Description:

SQUIRREL CAGE MOTOR WITH SEPARATE COOLING.

Unit: Motors and Generators Date: 15-Jun-2018	Issued by: Hautala, Janne Approved by: Moberg, Timo	Replaces: Replaced by:
ABB	Customer Reference:	