ABB DRIVES FOR HVAC

ACH580-01 drives

Hardware manual
(0.75 to 250 kW, 1 to 350 hp)

Related documents are listed on page 27.

Hardware manual

ACH580-01 drives
(0.75 to 250 kW, 1 to 350 hp)

Table of contents

1. Safety instructions

4. Mechanical installation

6. Electrical installation – IEC

7. Electrical installation – North America

© 2018 ABB Oy. All Rights Reserved.

3AXD50000044839 Rev B
EN
EFFECTIVE: 2018-12-20

Table of contents

1. Safety instructions

Contents of this chapter . . . 15
Use of warnings and notes in this manual . . . 15
General safety in installation, start-up and maintenance . . . 16
Electrical safety in installation, start-up and maintenance . . . 18
Precautions before electrical work . . . 18
Additional instructions and notes . . . 19
Grounding . . . 20
Additional instructions for permanent magnet motor drives . . . 22
Safety in installation, start-up and maintenance . . . 22
General safety in operation . . . 23

2. Introduction to the manual

Contents of this chapter . . . 25
Applicability . . . 25
Target audience . . . 25
Purpose of the manual . . . 25
Contents of this manual . . . 26
Categorization by frame (size) . . . 27
Related documents . . . 27
Quick installation and commissioning flowchart . . . 29
Terms and abbreviations . . . 31

3. Operation principle and hardware description

Contents of this chapter . . . 35
Operation principle . . . 36
Layout . . . 37
Overview of power and control connections . . . 43
External control connection terminals, frames R1…R5 . . . 44
External control connection terminals, frames R6…R9 . . . 45
Control panel . . . 46
Control panel door mounting kits . . . 47
Type designation label . . . 47
Type designation key . . . 49

4. Mechanical installation

Contents of this chapter . . . 53
Safety . . . 53
Checking the installation site . . . 54
Required tools . . . 58
Moving the drive . . . 58
Unpacking and examining delivery, frames R1 and R2 . . . 59

Frames R1 and R2 cable box (IP21, UL Type 1) 60
Unpacking and examining delivery, frame R3 61
Unpacking and examining delivery, frame R4 63
Unpacking and examining delivery, frame R5 65
Frame R5 cable box (IP21, UL Type 1) 66
Unpacking and examining delivery, frames R6…R9 67
Frame R6 cable box (IP21, UL Type 1) 69
Frame R7 cable box (IP21, UL Type 1) 70
Frame R8 cable box (IP21, UL Type 1) 71
Frame R9 cable box (IP21, UL Type 1) 72
Installing the drive 73
Installing the drive vertically, frames R1…R4 73
Install the cable box, frames R1…R2 74
Installing the drive vertically, frame R5 75
Installing the drive vertically, frames R6…R9 78
Installing the drive vertically side by side 79
Installing the drive horizontally, frames R1…R5 80
Flange mounting 80

5. Guidelines for planning the electrical installation

Contents of this chapter 81
Limitation of liability 81
Selecting the supply disconnecting device 81
European Union 82
North America 82
Other regions 82
Checking the compatibility of the motor and drive 83
Protecting the motor insulation and bearings 83
Requirements table 84
Selecting the power cables 89
General guidelines, IEC and North America 89
Power cable types 91
Additional guidelines, North America 93
Conductor type, IEC and North America 95
Power cable shield, IEC and North America 95
Typical power cable sizes, IEC 97
Typical power cable sizes, UL/NEC 99
Armored cable / shielded power cable, IEC and North America 99
Selecting the control cables, IEC and North America 100
Shielding 100
Signals in separate cables 100
Signals allowed to be run in the same cable 100
Relay cable 100
Control panel cable 100
Drive composer PC tool cable 101
FPBA-01 PROFIBUS DP adapter module connectors 101
Routing the cables 102
General guidelines, IEC 102
General guidelines, North America 103
Continuous motor cable shield or enclosure for equipment on the motor cable 104

Separate control cable ducts, IEC and North America . . . 104
Implementing short-circuit and thermal overload protection . . . 105
Protecting the drive and input power cable in short-circuits . . . 105
Protecting the motor and motor cable in short-circuits . . . 105
Protecting the drive and the input power and motor cables against thermal overload . . 106
Protecting the motor against thermal overload . . . 106
Protecting the drive against ground faults . . . 106
Residual current device compatibility . . . 106
Implementing the Emergency stop function . . . 107
Implementing the Safe torque off function . . . 107
Implementing the ATEX-certified Safe motor disconnection function (option +Q971) . . . 107
Using a safety switch between the drive and the motor . . . 107
Using a contactor between the drive and the motor . . . 107
Implementing the undervoltage control (power-loss ride-through) . . . 108
Protecting the contacts of relay outputs . . . 108
Limiting relay output maximum voltages at high installation altitudes . . . 109
Implementing a motor temperature sensor connection . . . 110

6. Electrical installation – IEC

Contents of this chapter . . . 113
Warnings . . . 113
Required tools . . . 113
Checking the insulation of the assembly . . . 114
Drive . . . 114
Input power cable . . . 114
Motor and motor cable . . . 114
Brake resistor assembly for R1…R3 . . . 115
Checking the compatibility with IT (ungrounded), corner-grounded delta, midpoint-grounded delta and TT systems . . . 116
EMC filter . . . 116
Ground-to-phase varistor . . . 116
When to disconnect EMC filter or ground-to-phase varistor: TN-S, IT, corner-grounded delta and midpoint-grounded delta systems . . . 117
Guidelines for installing the drive to a TT system . . . 118
Identifying different types of electrical power systems . . . 119
Frames R1…R3 . . . 120
Frames R4…R9 . . . 121
Connecting the power cables . . . 123
Connection diagram . . . 123
Connection procedure, frames R1…R4 . . . 124
Connection procedure, frame R5 . . . 131
Connection procedure, frames R6…R9 . . . 137
DC connection . . . 141
Connecting the control cables . . . 142
Default I/O connection diagram (HVAC default configuration) . . . 143
Control cable connection procedure R1…R9 . . . 153
Installing option modules . . . 159
Mechanical installation of option modules . . . 159
Wiring the modules . . . 161
Reinstalling grommets . . . 162

Reinstalling covers . . . 163
Reinstalling cover, frames R1…R4 . . . 163
Reinstalling covers, frame R5 . . . 164
Reinstalling side plates and covers, frames R6…R9 . . . 165
Connecting a PC . . . 166

7. Electrical installation – North America

Contents of this chapter . . . 167
Warnings . . . 167
Required tools . . . 167
Checking the insulation of the assembly . . . 168
Drive . . . 168
Input power cable . . . 168
Motor and motor cable . . . 168
Brake resistor assembly for R1…R3 . . . 169
Checking the compatibility with IT (ungrounded), corner-grounded delta, midpoint-grounded delta and TT systems . . . 170
EMC filter . . . 170
Ground-to-phase varistor . . . 170
When to connect EMC filter or disconnect ground-to-phase varistor: TN-S, IT, corner-grounded delta and midpoint-grounded delta systems . . . 171
Guidelines for installing the drive to a TT system . . . 172
Identifying different types of electrical power systems . . . 173
Frames R1…R3, disconnecting EMC or varistor screws . . . 174
Frames R4…R9, disconnecting EMC or varistor screws . . . 176
Connecting the power cables . . . 178
Connection diagram . . . 178
Connection procedure, frames R1…R4 . . . 180
Connection procedure, frame R5 . . . 185
Connection procedure, frames R6…R9 . . . 190
DC connection . . . 195
Connecting the control cables . . . 196
Default I/O connection diagram (HVAC default configuration) . . . 197
Control cable connection procedure R1…R9 . . . 207
Installing option modules . . . 213
Mechanical installation of option modules . . . 213
Wiring the modules . . . 215
Reinstalling grommets . . . 216
Reinstalling covers . . . 217
Reinstalling cover, frames R1…R4 . . . 217
Reinstalling covers, frame R5 . . . 218
Reinstalling side plates and covers, frames R6…R9 . . . 219
Installing UL Type 12 hood . . . 220
Connecting a PC . . . 221

8. Installation checklist

Contents of this chapter . . . 223
Warnings . . . 223
Checklist . . . 223

9. Maintenance and hardware diagnostics

Contents of this chapter . . . 225
Maintenance intervals . . . 225
Description of symbols . . . 226
Functional safety . . . 226
Recommended annual actions by the user . . . 226
Recommended maintenance actions by the user . . . 226
Heatsink . . . 227
Fans . . . 228
Replacing the main cooling fan, IP21 and IP55 (UL Type 1 and UL Type 12) frames R1...R4 . . . 229
Replacing the main cooling fan, IP21 and IP55 (UL Type 1 and UL Type 12) frames R5...R8 . . . 231
Replacing the main cooling fans, IP21 and IP55 (UL Type 1 and UL Type 12) frame R9 . . . 232
Replacing the auxiliary cooling fan, IP21 and IP55 (UL Type 1 and UL Type 12) frames R5...R9 . . . 233
Replacing the auxiliary cooling fan, IP55 (UL Type 12) frames R1...R2 . . . 234
Replacing the auxiliary cooling fan, IP55 (UL Type 12) frame R3 . . . 235
Replacing the auxiliary cooling fan, IP55 (UL Type 12) frame R4 . . . 236
Replacing the second auxiliary cooling fan, IP55 (UL Type 12) frames R8...R9 . . . 237
Capacitors . . . 238
Reforming the capacitors . . . 238
Control panel . . . 239
Cleaning the control panel . . . 239
Replacing the battery in the control panel . . . 239
LEDs . . . 240
Drive LEDs . . . 240
Control panel LEDs . . . 241

10. Technical data

Contents of this chapter . . . 243
Electrical ratings . . . 244
IEC ratings at UN = 230 V . . . 244
IEC ratings at UN = 400 V . . . 246
IEC ratings at UN = 480 V . . . 247
UL (NEC) ratings at UN = 208/230 V . . . 249
UL (NEC) ratings at UN = 460 V . . . 250
UL (NEC) ratings at UN = 575 V . . . 251
Conversion tables for IEC and North American type codes . . . 252
Sizing . . . 253
Derating . . . 254
Ambient temperature derating, IP21 (UL Type 1) . . . 256
Ambient temperature derating, IP55 (UL Type 12) . . . 257
Altitude derating . . . 258
Switching frequency derating . . . 260
Output frequency derating . . . 261
Fuses (IEC) . . . 262
gG fuses (IEC) . . . 262

uR and aR fuses (IEC) . . . 264
Circuit breakers (IEC) . . . 266
Fuses (UL) . . . 268
Dimensions, weights and free space requirements . . . 270
Losses, cooling data and noise . . . 275
Cooling air flow, heat dissipation and noise for stand-alone drives . . . 275
Cooling air flow and heat dissipation for flange mounting (option +C135) . . . 279
Terminal and lead-through data for the power cables . . . 280
IEC . . . 280
UL (NEC) . . . 282
Terminal and lead-through data for the control cables . . . 284
IEC . . . 284
UL (NEC) . . . 285
Electrical power network specification . . . 286
Voltage (U1) . . . 286
Motor connection data . . . 286
Brake resistor connection data for frames R1…R3 . . . 289
Control connection data . . . 289
Efficiency . . . 296
Degree of protection . . . 296
Ambient conditions . . . 296
Materials . . . 298
Applicable standards . . . 298
CE marking . . . 300
Compliance with the European Low Voltage Directive . . . 300
Compliance with the European EMC Directive . . . 300
Compliance with the European ROHS II Directive 2011/65/EU . . . 300
Compliance with the European WEEE Directive . . . 300
Compliance with the European Machinery Directive 2006/42/EC 2nd Edition – June 2010 . 300
Compliance with the EN 61800-3:2004 + A1:2012 . . . 301
Definitions . . . 301
Category C1 . . . 301
Category C2 . . . 302
Category C3 . . . 302
Category C4 . . . 303
UL marking . . . 304
UL checklist . . . 304
China RoHS marking . . . 306
RCM marking . . . 306
WEEE marking . . . 306
EAC marking . . . 306
Disclaimer . . . 306
Cyber security disclaimer . . . 307

11. Dimension drawings

Contents of this chapter . . . 309
Frame R1, IP21 (UL Type 1) . . . 310
Frame R1, IP55 (UL Type 12) . . . 311
Frame R1, IP55+F278 (UL Type 12) . . . 312

Frame R2, IP21 (UL Type 1) . . . 313
Frame R2, IP55 (UL Type 12) . . . 314
Frame R2, IP55+F278 (UL Type 12) . . . 315
Frame R3, IP21 (UL Type 1) . . . 316
Frame R3, IP55 (UL Type 12) . . . 317
Frame R3, IP55+E223 (UL Type 12) . . . 318
Frame R3, IP55+F278/F316 (UL Type 12) . . . 319
Frame R4, IP21 (UL Type 1) . . . 320
Frame R4, IP55 (UL Type 12) . . . 321
Frame R4, IP55+E223 (UL Type 12) . . . 322
Frame R4, IP55+F278/F316 (UL Type 12) . . . 323
Frame R5, IP21 (UL Type 1) . . . 324
Frame R5, IP55 (UL Type 12) . . . 325
Frame R5, IP55+E223 (UL Type 12) . . . 326
Frame R5, IP55+F278/F316 (UL Type 12) . . . 327
Frame R6, IP21 (UL Type 1) . . . 328
Frame R6, IP55 (UL Type 12) . . . 329
Frame R7, IP21 (UL Type 1) . . . 330
Frame R7, IP55 (UL Type 12) . . . 331
Frame R8, IP21 (UL Type 1) . . . 332
Frame R8, IP55 (UL Type 12) . . . 333
Frame R9, IP21 (UL Type 1) . . . 334
Frame R9, IP55 (UL Type 12) . . . 335

12. Resistor braking

Contents of this chapter . . . 337
Operation principle and hardware description . . . 337
Resistor braking, frames R1…R3 . . . 338
    Planning the braking system . . . 338
    Mechanical installation . . . 342
    Electrical installation . . . 342
    Start-up . . . 343
Resistor braking, frames R4…R9 . . . 344
    Planning the braking system . . . 344

13. Safe torque off function

Contents of this chapter . . . 345
Description . . . 345
    Compliance with the European Machinery Directive . . . 346
Connection principle . . . 347
    Connection with internal +24 V DC power supply . . . 347
    Connection with internal +24 V DC power supply, single-channel . . . 348
    Connection with external +24 V DC power supply . . . 349
Wiring examples . . . 349
    Activation switch . . . 350
    Cable types and lengths . . . 350
    Grounding of protective shields . . . 351
Operation principle . . . 351
Start-up including acceptance test . . . 351

Competence . . . 352
Acceptance test reports . . . 352
Acceptance test procedure . . . 353
Use . . . 354
Maintenance . . . 356
Competence . . . 356
Fault tracing . . . 356
Safety data . . . 358
Abbreviations . . . 360
Declaration of conformity . . . 360
Certificate . . . 361

14. Optional I/O extension modules

Contents of this chapter . . . 363
CHDI-01 115/230 V digital input extension module . . . 363
Safety instructions . . . 363
Hardware description . . . 363
Mechanical installation . . . 364
Electrical installation . . . 365
Start-up . . . 367
Diagnostics . . . 367
Technical data . . . 368
CMOD-01 multifunction extension module (external 24 V AC/DC and digital I/O) . . . 370
Safety instructions . . . 370
Hardware description . . . 370
Mechanical installation . . . 371
Electrical installation . . . 372
Start-up . . . 374
Diagnostics . . . 375
Technical data . . . 376
CMOD-02 multifunction extension module (external 24 V AC/DC and isolated PTC interface) . . . 379
Safety instructions . . . 379
Hardware description . . . 379
Mechanical installation . . . 380
Electrical installation . . . 381
Start-up . . . 383
Diagnostics . . . 384
Technical data . . . 385

15. Common mode, du/dt and sine filters

Content of this chapter . . . 389
Common mode filters . . . 389
When is a common mode filter needed? . . . 389
du/dt filters . . . 389
When is a du/dt filter needed? . . . 389
Common mode filter types . . . 390
du/dt filter types . . . 391
Description, installation and technical data of the FOCH filters . . . 391

Description, installation and technical data of the NOCH filters 391
Sine filters 392
Selecting a sine filter for the drive 392
Description, installation and technical data 393

Further information

Product and service inquiries 395
Product training 395
Providing feedback on ABB Drives manuals 395
Document library on the Internet 395

1

Safety instructions

Contents of this chapter

This chapter contains the safety instructions which you must obey when you install and operate the drive and do maintenance on the drive. If you ignore the safety instructions, injury, death or damage can occur.

Use of warnings and notes in this manual

Warnings tell you about conditions which can cause injury or death, or damage to the equipment. They also tell you how to prevent the danger. Notes draw attention to a particular condition or fact, or give information on a subject.

The manual uses these warning symbols:

	Electricity warning tells about hazards from electricity which can cause injury or death, or damage to the equipment.
	General warning tells about conditions, other than those caused by electricity, which can cause injury or death, or damage to the equipment.
	Electrostatic sensitive devices warning tells you about the risk of electrostatic discharge which can cause damage to the equipment.

General safety in installation, start-up and maintenance

These instructions are for all personnel that install the drive and do maintenance work on it.

WARNING! Obey these instructions. If you ignore them, injury or death, or damage to the equipment can occur.

- Use safety shoes with a metal toe cap to avoid foot injury. Wear protective gloves and long sleeves. Some parts have sharp edges.
- Handle the drive carefully.
  - Frames R5…R9: Lift the drive with a lifting device. Use the lifting eyes of the drive.
  - Frames R5…R9: Do not tilt the drive. The drive is heavy and its center of gravity is high. An overturning drive can cause physical injury.

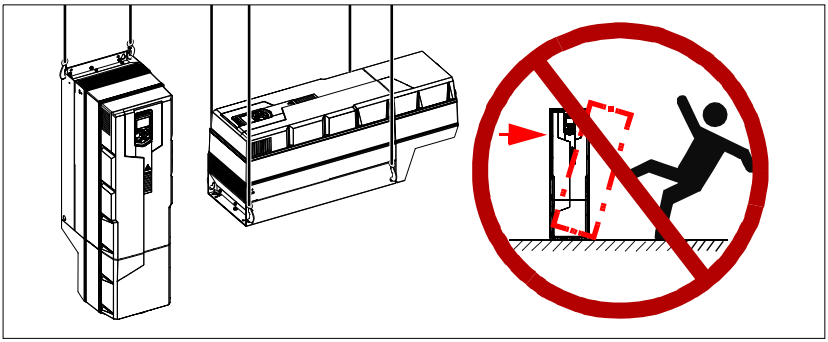

- Beware of hot surfaces. Some parts, such as heatsinks of power semiconductors, remain hot for a while after disconnection of the electrical supply.
- Keep the drive in its package or protect it otherwise from dust and burr from drilling and grinding until you install it.
- Protect also the installed drive against dust and burr. Electrically conductive debris inside the drive may cause damage or malfunction.
- Vacuum clean the area below the drive before the start-up to prevent the drive cooling fan from drawing the dust inside the drive.
- Do not cover the air inlet and outlet when the drive runs.
- Make sure that there is sufficient cooling. See sections *Checking the installation site* on page *54* and *Losses, cooling data and noise* on page *275* for more information.
- Before you connect voltage to the drive, make sure that the drive covers are on. Keep the covers on during the operation.
- Before you adjust the drive operation limits, make sure that the motor and all driven equipment can operate throughout the set operation limits.

- Before you activate the automatic fault reset or automatic restart functions of the drive control program, make sure that no dangerous situations can occur. These functions reset the drive automatically and continue operation after a fault or supply break. If these functions are activated, the installation must be clearly marked as defined in IEC/EN 61800-5-1, subclause 6.5.3, for example, “THIS MACHINE STARTS AUTOMATICALLY”.
- If you have connected safety circuits to the drive (for example, emergency stop and Safe torque off), validate them at the start up. For the validation of the Safe torque off, see *ACH580 HVAC control program firmware manual* (3AXD50000027537 [English]). For the validation of other safety circuits, see the instructions provided with them.

Note:

- If you select an external source for start command and it is on, and the start command is level-triggered, the drive will start immediately after fault reset. See parameters 20.02 Ext1 start trigger type and 20.07 Ext2 start trigger type in *ACH580 HVAC control program firmware manual* (3AXD50000027537 [English]).
- When the control location is not set to Local (text Hand is not shown on the top row of the panel and parameter 19.19 Off mode disable has value Off button disabled), the stop key on the control panel will not stop the drive.
- Frames R1…R5: Do not attempt to repair a malfunctioning drive; contact your local representative for replacement or repair by authorized persons.

  Frames R6…R9: Can be repaired by authorized persons.

Electrical safety in installation, start-up and maintenance

Precautions before electrical work

These warnings are for all personnel who do work on the drive, motor cable or motor.

WARNING! Obey these instructions. If you ignore them, injury or death, or damage to the equipment can occur. If you are not a qualified electrical professional, do not do electrical installation or maintenance work. Go through these steps before you begin any installation or maintenance work.

1. Clearly identify the work location.
2. Disconnect all possible voltage sources. Lock and tag.
   - Open the main disconnector at the power supply of the drive.
   - Make sure that reconnection is not possible.
   - Disconnect any external power sources from the control circuits.
   - After you disconnect the drive, always wait for 5 minutes to let the intermediate circuit capacitors discharge before you continue.
3. Protect any other energized parts in the work location against contact.
4. Take special precautions when close to bare conductors.
5. Measure that the installation is de-energized.
   - Use a multimeter with an impedance of at least 1 Mohm.
   - Make sure that the voltage between the drive input power terminals (L1, L2, L3) and the grounding terminal (PE) is close to 0 V.
   - Make sure that the drive DC voltage is close to 0 V.

     Frames R1…R3: Measure the voltage between the drive UDC+ terminal and grounding terminal (PE) with one multimeter. As there is no UDC- terminal, measure the voltage between the drive T1/U terminal and grounding terminal (PE) with another multimeter. Make sure that the voltage difference between the multimeters is close to 0 V.

     Frames R4…R9: Measure the voltage between the drive DC terminals (UDC+ and UDC-) and the grounding terminal (PE) and make sure that it is close to 0 V.
6. Install temporary grounding as required by the local regulations.
7. Ask for a permit to work from the person in control of the electrical installation work

Additional instructions and notes

WARNING! Obey these instructions. If you ignore them, injury or death, or damage to the equipment can occur.

- A drive with the internal EMC filter connected can be installed to a symmetrically grounded TN-S system. If you install the drive to another system, check if you must disconnect the EMC filter. See sections
  - IEC: *When to disconnect EMC filter or ground-to-phase varistor: TN-S, IT, corner-grounded delta and midpoint-grounded delta systems* on page *117*, and *Guidelines for installing the drive to a TT system* on page *118*.
  - North America: *When to connect EMC filter or disconnect ground-to-phase varistor: TN-S, IT, corner-grounded delta and midpoint-grounded delta systems* on page *171*, and *Guidelines for installing the drive to a TT system* on page *172*.

  WARNING! Do not install a drive with the EMC filter connected to a system that the filter is not suitable for. This can cause danger, or damage the drive.

  Note: When the internal EMC filter is disconnected, the EMC compatibility of the drive is considerably reduced. See section *EMC compatibility and motor cable length* on page *288*.
- A drive with the ground-to-phase varistor connected can be installed to a symmetrically grounded TN-S system. If you install the drive to another system, check if you must disconnect the varistor. See sections
  - IEC: *When to disconnect EMC filter or ground-to-phase varistor: TN-S, IT, corner-grounded delta and midpoint-grounded delta systems* on page *117*, and *Guidelines for installing the drive to a TT system* on page *118*.
  - North America: *When to connect EMC filter or disconnect ground-to-phase varistor: TN-S, IT, corner-grounded delta and midpoint-grounded delta systems* on page *171*, and *Guidelines for installing the drive to a TT system* on page *172*.

  WARNING! Do not install a drive with the ground-to-phase varistor connected to a system that the varistor is not suitable for. If you do, the varistor circuit can be damaged.
- Use all ELV (extra low voltage) circuits connected to the drive only within a zone of equipotential bonding, that is, within a zone where all simultaneously accessible conductive parts are electrically connected to prevent hazardous voltages appearing between them. You can accomplish this by a proper factory grounding, that is, make sure that all simultaneously accessible conductive parts are grounded to the protective earth (PE) bus of the building.
- Do not do insulation or voltage withstand tests on the drive or drive modules.

Note:

- The motor cable terminals of the drive are at a dangerous voltage when the input power is on, regardless of whether the motor is running or not.
- The DC and brake resistor terminals (UDC+, UDC-, R+ and R-) are at a dangerous voltage.
- External wiring can supply dangerous voltages to the terminals of relay outputs (RO1, RO2 and RO3).
- The Safe torque off function does not remove the voltage from the main and auxiliary circuits. The function is not effective against deliberate sabotage or misuse.

WARNING! Use a grounding wrist band when you handle the printed circuit boards. Do not touch the boards unnecessarily. The boards contain components sensitive to electrostatic discharge.

Grounding

These instructions are for all personnel who are responsible for the electrical installation, including the grounding of the drive.

WARNING! Obey these instructions. If you ignore them, injury or death, or equipment malfunction can occur, and electromagnetic interference can increase.

- If you are not a qualified electrical professional, do not do grounding work.
- Always ground the drive, the motor and adjoining equipment to the protective earth (PE) bus of the power supply. This is necessary for the personnel safety. Proper grounding also reduces electromagnetic emission and interference.
- In a multiple-drive installation, connect each drive separately to the protective earth (PE) bus of the power supply.
- Make sure that the conductivity of the protective earth (PE) conductors is sufficient. See section *Selecting the power cables* on page *89*. Obey the local regulations.
- Connect the power cable shields to the protective earth (PE) terminals of the drive.
- Make a 360° grounding of the power and control cable shields at the cable entries to suppress electromagnetic disturbances.

Note:

- You can use power cable shields as grounding conductors only when their conductivity is sufficient.
- Standards IEC/EN 61800-5-1 (section 4.3.5.5.2.) and UL 68100-5-1 require that as the normal touch current of the drive is higher than 3.5 mA AC or 10 mA DC, you must use a fixed protective earth (PE) connection. In addition,
  - install a second protective earth conductor of the same cross-sectional area as the original protective earthing conductor,

  or
  - install a protective earth conductor with a cross-section of at least 10 mm^2 Cu or 16 mm^2 Al (when aluminum cables are allowed),

  or
  - install a device which automatically disconnects the supply if the protective earth conductor breaks.

Additional instructions for permanent magnet motor drives

Safety in installation, start-up and maintenance

These are additional warnings concerning permanent magnet motor drives. The other safety instructions in this chapter are also valid.

WARNING! Obey these instructions. If you ignore them, injury or death and damage to the equipment can occur.

- Do not work on a drive when a rotating permanent magnet motor is connected to it. A rotating permanent magnet motor energizes the drive including its input power terminals.

Before installation, start-up and maintenance work on the drive:

- Stop the motor.
- Disconnect the motor from the drive with a safety switch or by other means.
- If you cannot disconnect the motor, make sure that the motor cannot rotate during work. Make sure that no other system can rotate the motor directly or through any mechanical connection.
- Measure that the installation is de-energized.
  - Use a multimeter with an impedance of at least 1 Mohm.
  - Make sure that the voltage between the drive output terminals (T1/U, T2/V, T3/W) and the grounding (PE) busbar is close to 0 V.
  - Make sure that the voltage between the drive input power terminals (L1, L2, L3) and the grounding (PE) busbar is close to 0 V.
  - Make sure that the voltage between the drive DC terminals (UDC+, UDC-) and the grounding (PE) terminal is close to 0 V.
- Install temporary grounding to the drive output terminals (T1/U, T2/V, T3/W). Connect the output terminals together as well as to the PE.

Start-up and operation:

- Motor overspeed causes overvoltage that can damage or destroy the capacitors in the intermediate circuit of the drive.

General safety in operation

These instructions are for all personnel that operate the drive.

WARNING! Obey these instructions. If you ignore them, injury or death, or damage to the equipment can occur.

- Do not power up the drive more than five times in ten minutes. Too frequent power-ups can damage the charging circuit of the DC capacitors. If you need to start or stop the drive, use the control panel Hand, Off and Auto keys or commands through the I/O terminals of the drive.
- Give a stop command to the drive before you reset a fault. If you have an external source for the start command and the start is on, the drive will start immediately after the fault reset, unless you configure the drive for pulse start. See the firmware manual.
- Before you activate automatic fault reset functions of the drive control program, make sure that no dangerous situations can occur. These functions reset the drive automatically and continue operation after a fault.

2

Introduction to the manual

Contents of this chapter

The chapter describes applicability, target audience and purpose of this manual. It describes the contents of this manual and refers to a list of related manuals for more information. The chapter also contains a flowchart of steps for checking the delivery, installing and commissioning the drive. The flowchart refers to chapters/sections in this manual.

Applicability

The manual applies to the ACH580-01 drives, including the new (2017) R1…R3 frames (see all applicable types in section *Electrical ratings* on page *244*).

Note: The manual does not apply to R0…R3 frames with type codes ACH580-01: 02A6-4, 03A3-4, 04A0-4, 05A6-4, 07A2-4, 09A-4, 12A6-4, 017A-4, 025A-4, 032A-4, 038A-4, 045A-4. For these types, see *ACH580-01 (0.75 to 250 kW, 1 to 350 hp) hardware manual* (3AUA0000076331[English]).

Target audience

The reader is expected to know the fundamentals of electricity, wiring, electrical components and electrical schematic symbols.

The manual is written for readers worldwide. Both SI and imperial units are shown. Special instructions for installations in North America are given.

Purpose of the manual

This manual provides information needed for planning the installation, installing, and servicing the drive.

Contents of this manual

The manual consists of the following chapters:

- *Safety instructions* (page *15*) gives safety instructions you must obey when installing, commissioning, operating and servicing the drive.
- *Introduction to the manual* (this chapter, page *25*) describes applicability, target audience, purpose and contents of this manual. It also contains a quick installation and commissioning flowchart. At the end, it lists terms and abbreviations.
- *Operation principle and hardware description* (page *35*) describes the operation principle, layout, power connections and control interfaces, type designation label and type designation information in short.
- *Mechanical installation* (page *53*) describes how to check the installation site, unpack, check the delivery and install the drive mechanically.
- *Guidelines for planning the electrical installation* (page *81*) describes how to plan the electrical installation of the drive, for example, how to check the compatibility of the motor and the drive and select cables, protections and cable routing.
- *Electrical installation – IEC* (page *113*) describes how to check the insulation of the assembly and the compatibility with other than symmetrically grounded TN-S systems. It then shows how to connect the power and control cables, install optional modules and connect a PC.
- *Electrical installation – North America* (page *167*) describes how to check the insulation of the assembly and the compatibility with other than symmetrically grounded TN-S systems. It then shows how to connect the power and control cables, install optional modules and connect a PC.
- *Installation checklist* (page *223*) contains a checklist for checking the mechanical and electrical installation of the drive before start-up.
- *Maintenance and hardware diagnostics* (page *225*) contains preventive maintenance instructions and LED indicator descriptions.
- *Technical data* (page *243*) contains technical specifications of the drive, eg, ratings, sizes and technical requirements as well as provisions for fulfilling the requirements for CE, UL and other marks.
- *Dimension drawings* (page *309*) shows dimension drawings of the drive.
- *Resistor braking* (page *337*) tells how to select the brake resistor.
- *Safe torque off function* (page *345*) describes STO features, installation and technical data.
- *Optional I/O extension modules* (page *363*) describes CMOD-01, CMOD-02, and CHDI-01 extension modules, their installation, start-up, diagnostics and technical data.
- *Common mode, du/dt and sine filters* (page *389*) describes selection of external filters for the drive.

- *Further information* (inside of the back cover, page *395*) tells how to make product and service inquiries, get information on product training, provide feedback on manuals and find documents on the Internet.

Categorization by frame (size)

The ACH580-01 is manufactured in frames (frame sizes) R1…R9. Some instructions and other information that only concern certain frames are marked with the symbol of the frame (R1…R9). The frame is marked on the type designation label attached to the drive, see section *Type designation label* on page *47*.

Related documents

You can find manuals and other product documents in PDF format on the Internet. See section *Document library on the Internet* on the inside of the back cover. For manuals not available in the Document library, contact your local ABB representative.

Drive manuals and guides	**Code (English)**
ACH580 HVAC control program firmware manual	*3AXD50000027537*
ACH580 HVAC control program firmware manual, Part 1	*3AXD50000209811*
ACH580 HVAC control program firmware manual, Part 2 Parameters	*3AXD50000209828*
ACH580-01 (0.75 to 250 kW, 1 to 350 hp) hardware manual	*3AXD50000044839*
ACH580-01 quick installation and start-up guide for frames R1 to R5	*3AXD50000044861*
ACH580-01 quick installation and start-up guide for frames R6 to R9	*3AXD50000036602*
ACH580 Installation, Operation, and Maintenance Manual (I, O & M) (North America only)	*3AXD50000049127*
ACX-AP-X assistant control panels user's manual	*3AUA0000085685*

Option manuals and guides	
ACS580, ACH580 and ACQ580 drive module frames R3 and R5 to R9 for cabinet installation (options +P940 and +P944) supplement	*3AXD50000210305*
ACS580-01, ACH580-01 and ACQ580-01 installation guide for UK gland plate (option +H358)	*3AXD50000034735*
CPTC-02 ATEX-certified thermistor protection module, Ex II (2) GD (+L537+Q971) user's manual	*3AXD50000030058*
CDPI-01 communication adapter module user's manual	*3AXD50000009929*
DPMP-01 mounting platform for control panels	*3AUA0000100140*
DPMP-02/03 mounting platform for control panels	*3AUA0000136205*
DPMP-06/07 mounting platform for control panels	*3AXD50000289561*
FBIP-21 BACnet/IP adapter module	*3AXD50000028468*
FCAN-01 CANopen adapter module user's manual	*3AFE68615500*
FCNA-01 ControlNet adapter module user's manual	*3AUA0000141650*
FDNA-01 DeviceNet™ adapter module user's manual	*3AFE68573360*
FECA-01 EtherCAT adapter module user's manual	*3AUA0000068940*

FEIP-21 Ethernet/IP adapter module user's manual	*3AXD50000158621*
FENA-01/-11/-21 Ethernet adapter module user's manual	*3AUA0000093568*
FEPL-02 Ethernet POWERLINK adapter module user's manual	*3AUA0000123527*
FLON-01 LONWORKS® adapter module user's manual	*3AUA0000041017*
FMBA-01 Modbus adapter module user's manual	*3AFE68586704*
FMBT-21 Modbus/TCP adapter module user's manual	*3AXD50000158607*
FPBA-01 PROFIBUS DP adapter module user's manual	*3AFE68573271*
FPNO-21 PROFINET adapter module user's manual	*3AXD50000158614*
FSCA-01 RS-485 adapter module user's manual	*3AUA0000109533*
Flange mounting kit installation supplement	*3AXD50000019100*
Flange mounting kit quick installation guide for ACx580-01 frames R1 to R3	*3AXD50000119172*
Flange mounting kit quick installation guide for ACx580-01 frames R4 to R5	*3AXD50000287093*
Flange mounting kit quick installation guide for ACS880-01 and ACX580-01 frames R6 to R9	*3AXD50000019099*
Main switch and EMC C1 filter options (+F278, +F316, +E223) installation supplement for ACS580-01, ACH580-01 and ACH580-01 frames R1 to R5	*3AXD50000155132*
UL Type 12 hood quick installation guide for ACS580-01, ACH580-01 and ACQ580-01 frames R1 to R9	*3AXD50000196067*

Tool and maintenance manuals and guides

Drive composer PC tool user's manual	*3AUA0000094606*
Converter module capacitor reforming instructions	*3BFE64059629*
NETA-21 remote monitoring tool user's manual	*3AUA0000096939*
NETA-21 remote monitoring tool installation and start-up guide	*3AUA0000096881*

ACH580-01 manuals

Quick installation and commissioning flowchart

Task	See
Identify the frame of your drive: R1…R9.	*Operation principle and hardware description*: *Type designation key* on page *49*
Plan the installation: select the cables, etc. Check the ambient conditions, ratings and required cooling air flow.	*Guidelines for planning the electrical installation* on page *81* *Technical data* on page *243*
Unpack and check the drive. Check that all necessary optional modules and equipment are present and correct.	*Mechanical installation: Unpacking and examining delivery, frames R1 and R2* on page *59*; R3 on page *61*; R4 on page *63*; R5 on page *65*; R6…R9 on page *67*
If the drive will be connected to another system than symmetrically grounded TN-S system: Check if you must disconnect the EMC filter or ground-to-phase varistor.	IEC: *Checking the compatibility with IT (ungrounded), corner-grounded delta, midpoint-grounded delta and TT systems* on page *116* North America: *Checking the compatibility with IT (ungrounded), corner-grounded delta, midpoint-grounded delta and TT systems* on page *170*
Install the drive on a wall.	*Mechanical installation* on page *53*
Route the cables.	*Guidelines for planning the electrical installation*: *Routing the cables* on page *102*
Check the insulation of the input cable and the motor and the motor cable.	Electrical installation: IEC: *Checking the insulation of the assembly* on page *114* North America: *Checking the insulation of the assembly* on page *168*
Connect the power cables.	Electrical installation: IEC: *Connecting the power cables* on page *123* North America: *Connecting the power cables* on page *178*

Task	See
Connect the control cables.	Electrical installation: IEC: *Connecting the control cables* on page *142* North America: *Connecting the control cables* on page *178*
↓	
Check the installation.	*Installation checklist* on page *223*
↓	
Commission the drive.	*ACH580 HVAC control program firmware manual* (3AXD50000027537 [English])

Terms and abbreviations

Term/abbreviation	Explanation
ACH-AP-H	Assistant control panel with Hand-Off-Auto functionality for the ACH580
ACH-AP-W	Assistant control panel with Hand-Off-Auto functionality and Bluetooth interface for the ACH580
Assistant control panel	Assistant control panel (ACH-AP-x) is an advanced operator keypad for communication with the drive.
BACnet™	BACnet™ is a registered trademark of American Society of Heating, Refrigerating and Air-Conditioning Engineers (ASHRAE).
Brake chopper	Conducts the surplus energy from the intermediate circuit of the drive to the brake resistor when necessary. The chopper operates when the DC link voltage exceeds a certain maximum limit. The voltage rise is typically caused by deceleration (braking) of a high inertia motor.
Brake resistor	Dissipates the drive surplus braking energy conducted by the brake chopper to heat. Essential part of the brake circuit. See *Brake chopper*.
Control board	Circuit board in which the control program runs.
Capacitor bank	See *DC link capacitors*.
CCA-01	Configuration adapter
CDPI-01	Communication adapter module
CHDI-01	Optional 115/230 V digital input extension module
CMOD-01	Optional multifunction extension module (external 24 V AC/DC and digital I/O extension)
CMOD-02	Optional multifunction extension module (external 24 V AC/DC and isolated PTC interface)
CPTC-02	Optional multifunction extension module (external 24 V and ATEX certified PTC interface)
DC link	DC circuit between rectifier and inverter
DC link capacitors	Energy storage which stabilizes the intermediate circuit DC voltage
DPMP-01	Mounting platform for ACH-AP control panel (flange mounting). CDP-01 communication adapter module is needed to connect the DMP0-01 to the drive. For up to 32 drives on a panel bus with a single panel on cabinet door, one DMP-02 with one CDPI-01 per each drive are used.
DPMP-02	Mounting platform for ACH-AP control panel (surface mounting). CDP-01 communication adapter module is needed to connect the DMP0-02 to the drive. For up to 32 drives on a panel bus with a single panel on cabinet door, one DMP-02 with one CDPI-01 per each drive are used.
DPMP-EXT	Door mounting kit for the panel. For one drive; contains both DPMP-02 and CDPI-01, which connects the DPMP-02 to the drive.
Drive	Frequency converter for controlling AC motors
EMC	Electromagnetic compatibility
EFB	Embedded fieldbus
FBA	Fieldbus adapter

Term/abbreviation	Explanation
FBIP-21	Optional BACnet/IP adapter module
FCAN-01	Optional CANopen adapter module
FCNA-01	ControlNet adapter module
FDNA-01	Optional DeviceNet adapter module
FECA-01	Optional EtherCAT adapter module
FEIP-21	Optional two-port Ethernet/IP adapter module
FENA-21	Optional two-port Ethernet adapter module for EtherNet/IP, Modbus TCP and PROFINET IO protocols
FEPL-02	Optional Ethernet POWERLINK adapter module
FLON-01	LONWORKS® adapter module
FMBA-01	Optional Modbus RTU adapter module
FMBT-21	Optional two-port Modbus/TCP adapter module
FPBA-01	Optional PROFIBUS DP adapter module
FPNO-21	Optional PROFINET IO adapter module
Frame (size)	Refers to drive physical size, for example R1 and R2. The type designation label attached to the drive shows the frame of the drive, see section *Type designation key* on page *49*.
FSCA-01	Optional EIA-485 adapter module
I/O	Input/Output
IGBT	Insulated gate bipolar transistor
Intermediate circuit	See *DC link*.
Inverter	Converts direct current and voltage to alternating current and voltage.
LONWORKS®	LONWORKS® (local operating network) is a networking platform specifically created to address the needs of control applications.
NEC 70	National Fire Protection Association (National Electric Code 70)
NETA-21	Remote monitoring tool
Network control	With fieldbus protocols based on the Common Industrial Protocol (CIP™), such as DeviceNet and Ethernet/IP, denotes the control of the drive using the Net Ctrl and Net Ref objects of the ODVA AC/DC Drive Profile. For more information, see www.odva.org, and the following manuals: • *FDNA-01 DeviceNet adapter module user's manual* (3AFE68573360 [English]), and • *FENA-01/-11/-21 Ethernet adapter module user's manual* (3AUA0000093568 [English]) • *FEIP-21 Ethernet/IP adapter module user's manual* (3AXD50000158621 [English]).
Parameter	User-adjustable operation instruction to the drive, or signal measured or calculated by the drive
PLC	Programmable logic controller

Term/abbreviation	Explanation
PROFIBUS, PROFIBUS DP, PROFINET IO	Registered trademarks of PI - PROFIBUS & PROFINET International
PTC	Positive temperature coefficient (PTC) refers to materials that experience an increase in electrical resistance when their temperature is raised.
R1, R2, …	*Frame (size)*
Rectifier	Converts alternating current and voltage to direct current and voltage.
SIL	Safety integrity level. See chapter *Safe torque off function* on page *345*.
STO	Safe torque off. See chapter *Safe torque off function* on page *345*.

3

Operation principle and hardware description

Contents of this chapter

This chapter briefly describes the operation principle, layout, type designation label and type designation information. It also shows a general diagram of power connections and control interfaces.

Operation principle

The ACH580-01 is a drive for controlling asynchronous AC induction motors, permanent magnet motors and synchronous reluctance motors (SynRM).

The figure below shows the simplified main circuit diagram of the drive.

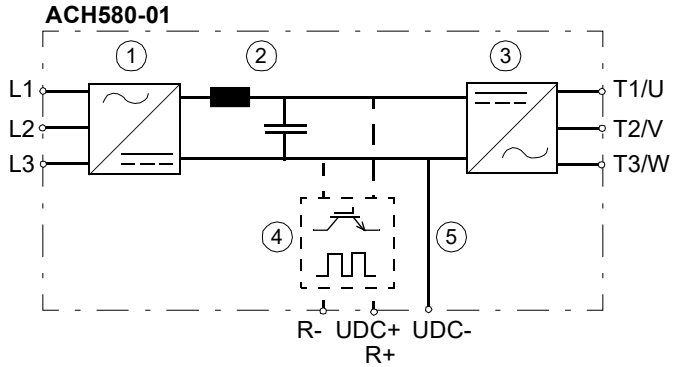

1	Rectifier. Converts alternating current and voltage to direct current and voltage.
2	DC link. DC circuit between rectifier and inverter.
3	Inverter. Converts direct current and voltage to alternating current and voltage.
4	Built-in brake chopper (R-, R+) in frames R1…R3. Conducts the surplus energy from the intermediate DC circuit of the drive to the brake resistor when necessary. The chopper operates when the DC link voltage exceeds a certain maximum limit. The voltage rise is typically caused by deceleration (braking) of a high inertia motor. The user obtains and installs the brake resistor when needed.
5	DC connection (UDC+, UDC-), for an external brake chopper in frames R4…R9.

Layout

Frames R1…R2

The layout of a frame R1 drive is presented below. The main structure of frame R2 is similar to R1. IP55 / UL Type 12 frames are also slightly different from IP21 / UL Type 1 frames, for example, IP21 / UL Type 1 front cover has two parts while IP55 / UL Type 12 front cover only has one part.

R1 IP21 / UL Type 1

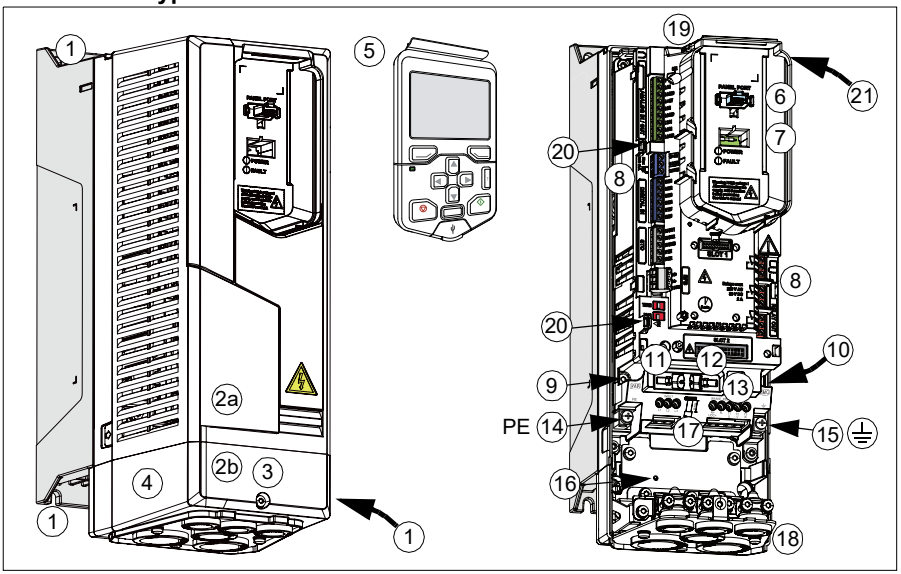

1	Mounting points (4 pieces)
2	Cover: upper part (2a), lower part (2b)
3	Cover screw
4	Cable/conduit box
5	Control panel
6	Control panel connection
7	Cold configuration connection for CCA-01
7	Power OK and Fault LEDs. See section *LEDs* on page *240*.
8	I/O connections. See section *External control connection terminals, frames R1…R5* on page *44*.
9	Varistor grounding screw (VAR). See *Frames R1…R3* on page *120* (IEC) or *Frames R1…R3, disconnecting EMC or varistor screws* (North America) on page *174*.

10	EMC filter grounding screw (EMC (DC)). See *Frames R1…R3* on page *120* (IEC or *Frames R1…R3, disconnecting EMC or varistor screws* (North America) on page *174*.
11	Place for storing the removed VAR screw
12	Place for storing the removed EMC screw
13	Input power connection (L1, L2, L3), motor connection (T1/U, T2/V, T3/W) and brake connection (R-, R+)
14	PE connection (power line)
15	Grounding connection (motor)
16	Additional grounding connection
17	Stripping length (8 mm) checker
18	Cable entry
19	Main cooling fan
20	Cable tie mounts for /I/O cables
21	Auxiliary cooling fan connector

This is an example of IP55 / UL Type 12 frames. They have one-piece front cover, which has a transparent window to leave the control panel visible. UL Type 12 frames have a hood, whose construction depends on the frame size.

R1 IP55 / UL Type 12

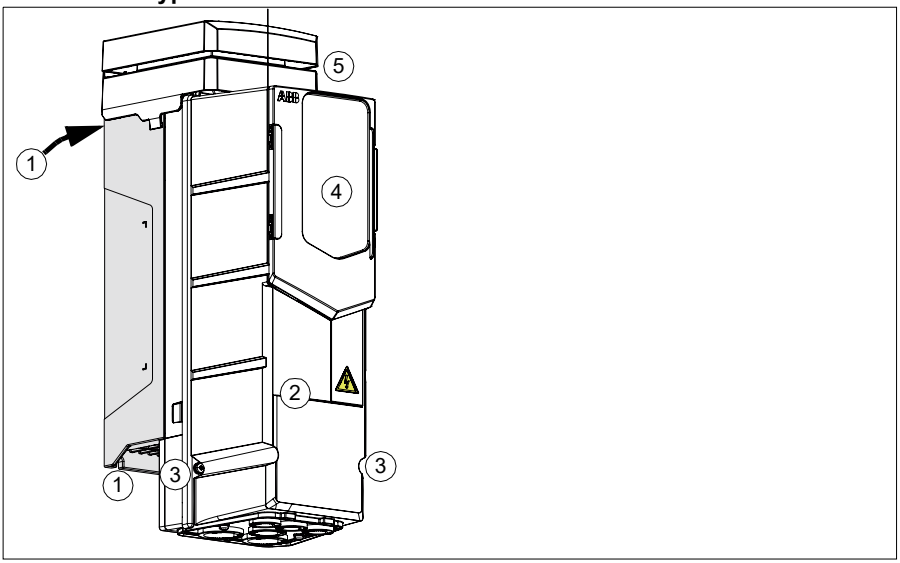

1	Mounting points (4 pieces), top points are under the hood, which is installed last.
2	Front cover
3	Cover screws (2 pieces)
4	Control panel behind the transparent window
5	Hood, UL Type 12 only. Hood types vary by the frame size, see page 272.

Frame R3

R3 IP21 / UL Type 1

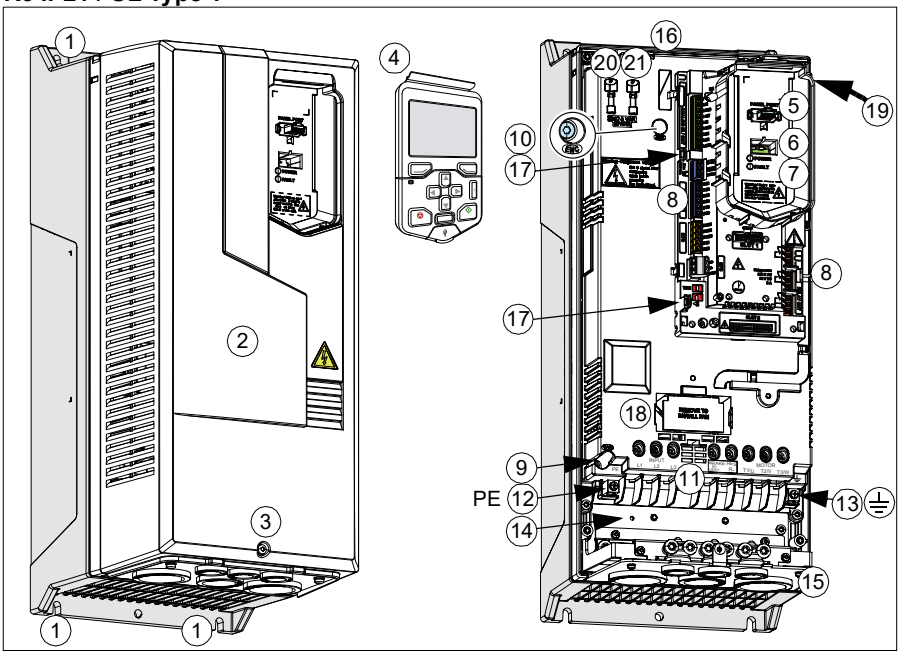

1	Mounting points (4 pieces)
2	Cover
3	Cover screw
4	Control panel
5	Control panel connection
6	Cold configuration connection for CCA-01
7	Power OK and Fault LEDs. See section *LEDs* on page *240*.
8	I/O connections. See section *External control connection terminals, frames R1…R5* on page *44*.
9	Varistor grounding screw (VAR). See *Frames R1…R3* on page *120* (IEC) or *Frames R1…R3, disconnecting EMC or varistor screws* (North America) on page *174*.
10	EMC filter grounding screw (EMC (DC)). See *Frames R1…R3* on page *120* (IEC) or *Frames R1…R3, disconnecting EMC or varistor screws* (North America) on page *174*.

11	Input power connection (L1, L2, L3), motor connection (T1/U, T2/V, T3/W) and brake connection (R-, R+)
12	PE connection (power line)
13	Grounding connection (motor)
14	Additional grounding connection
15	Cable entry
16	Main cooling fan
17	Cable tie mounts for I/O cables
18	Auxiliary cooling fan. For IP55/UL Type 12 drives only.
19	Auxiliary cooling fan connector
20	Place for storing the removed EMC screw
21	Place for storing the removed VAR screw

Frame R4

R4 IP21 / UL Type 1

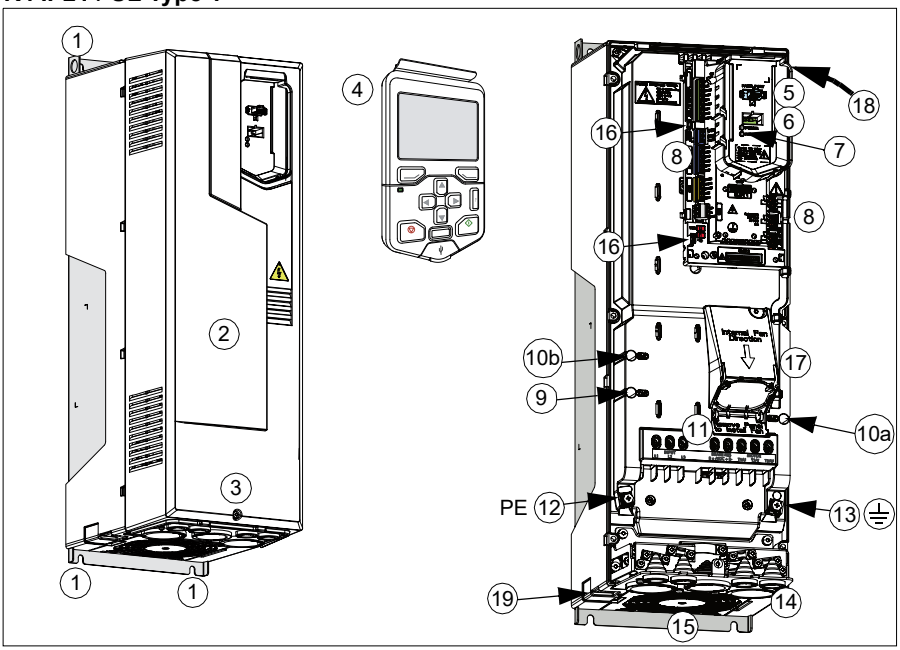

1	Mounting points (4 pieces)
2	Cover
3	Cover screw
4	Control panel
5	Control panel connection
6	Cold configuration connection for CCA-01
7	Power OK and Fault LEDs. See section *LEDs* on page *240*.
8	I/O connections. See section *External control connection terminals, frames R1…R5* on page *44*.
9	Varistor grounding screw (VAR). See *Frames R4…R9* on page *121* (IEC) or *Frames R4…R9, disconnecting EMC or varistor screws* (North America) on page *176*.

10	Two EMC filter grounding screws, 10a: EMC (DC) and 10b: EMC (AC). See *Frames R4…R9* on page *121* (IEC) or *Frames R4…R9, disconnecting EMC or varistor screws* (North America) on page *176*.
11	Input power connection (L1, L2, L3), motor connection (T1/U, T2/V, T3/W) and DC connection (UDC+, UDC-)
12	PE connection (power line)
13	Grounding connection (motor)
14	Cable entry
15	Main cooling fan
16	Cable tie mounts for I/O cables
17	Auxiliary cooling fan. For IP55/UL Type 12 drives only.
18	Auxiliary cooling fan connector
19	Additional grounding connection

Frame R5

R5 IP21 / UL Type 1

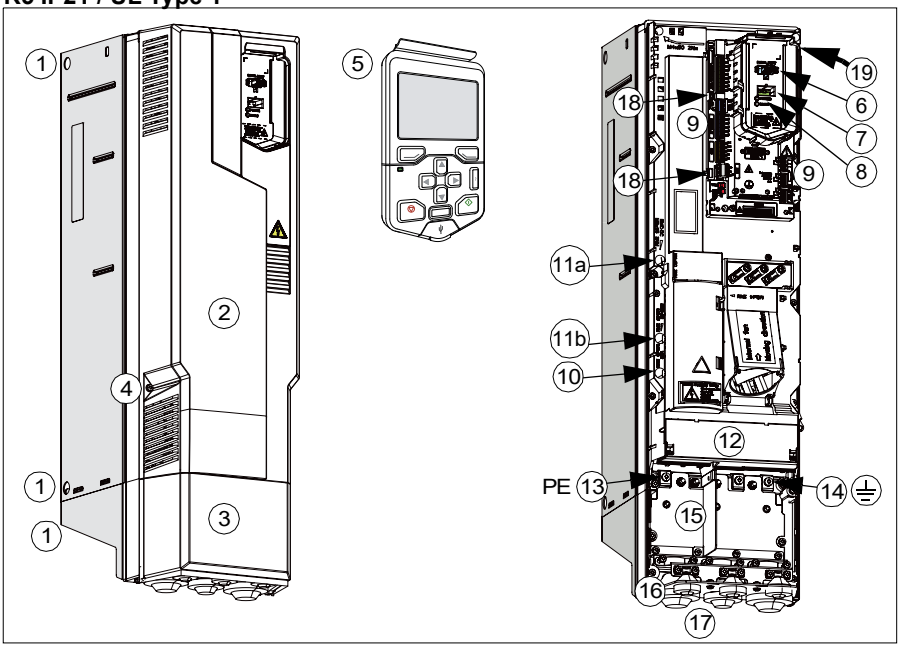

1	Mounting points (6 pieces: 2 at the top, 2 at the bottom of the main part of the frame, 2 at the top of the cable box)
2	Cover
3	Cable/conduit box
4	Cover screws (2 pieces)
5	Control panel
6	Control panel connection
7	Cold configuration connection for CCA-01
8	Power OK and Fault LEDs. See section *LEDs* on page *240*.
9	I/O connections. See section *External control connection terminals, frames R1…R5* on page *44*.
10	Varistor grounding screw (VAR). See *Frames R4…R9* on page *121* (IEC) or *Frames R4…R9, disconnecting EMC or varistor screws* (North America) on page *176*.

11	Two EMC filter grounding screws, 11a: EMC (DC) and 11b: EMC (AC). See *Frames R4…R9* on page *121* (IEC) or *Frames R4…R9, disconnecting EMC or varistor screws* (North America) on page *176*.
12	Input power connection (L1, L2, L3), motor connection (T1/U, T2/V, T3/W) and DC connection (UDC+, UDC-) under the shroud
13	PE connection (power line)
14	Grounding connection (motor)
15	Cable box plate
16	Cable entry
17	Main cooling fan
18	Cable tie mounts for I/O cables
19	Auxiliary cooling fan connector

Frames R6…R9

The layout of a frame R6 drive is presented below. The constructions of frames R6…R9 differ to some extent.

R6 IP21 / UL Type 1

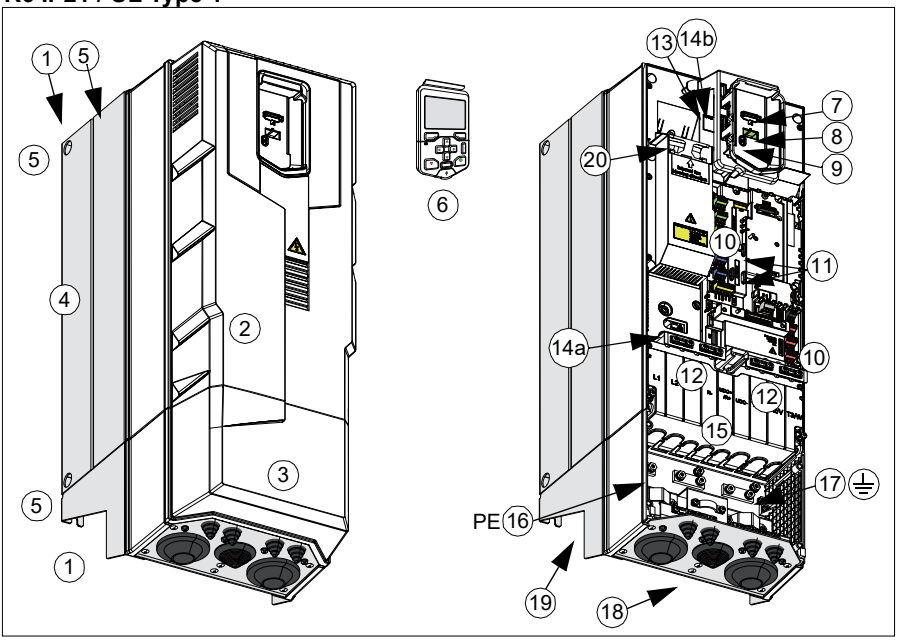

1	Mounting points (6 pieces: 2 at the top, 2 at the bottom of the main part of the frame, 2 at the top of the cable box)
2	Cover
3	Cable/conduit box
4	Heatsink
5	Lifting holes (6 pieces)
6	Control panel
7	Control panel connection
8	Cold configuration connection for CCA-01
9	Power OK and Fault LEDs. See section *LEDs* on page *240*.
10	I/O connections. See section *External control connection terminals, frames R6…R9* on page *45*.
11	Cable tie mounts for I/O cables
12	Clamps for I/O cable mechanical support
13	Varistor grounding screw (VAR), under the control panel platform.
	See *Frames R4…R9* on page *121* (IEC) or *Frames R4…R9, disconnecting EMC or varistor screws* (North America) on page *176*.
14	Two EMC filter grounding screws, 14a: EMC (DC) under the control panel platform and 14b: EMC (AC) at the left, above the shroud. See *Frames R4…R9* on page *121* (IEC) or *Frames R4…R9, disconnecting EMC or varistor screws* (North America) on page *176*.
15	Shroud. Under the shroud: Input power connection (L1, L2, L3), motor connection (T1/U, T2/V, T3/W) and DC connection (UDC+, UDC-).
16	PE connection (power line)
17	Grounding connection (motor), under the shroud (15).
18	Cable entry
19	Main cooling fan
20	Auxiliary cooling fan

Overview of power and control connections

The logical diagram below shows the power connections and control interfaces of the drive.

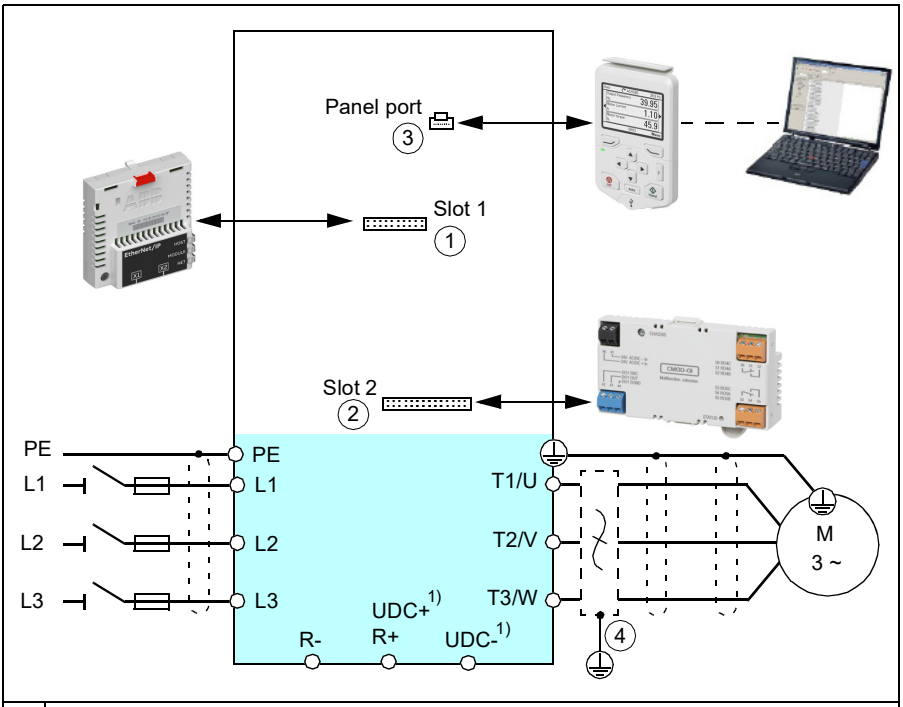

1	Option slot 1 for optional fieldbus adapter modules
2	Option slot 2 for optional I/O extension modules
3	Panel port.
4	d*u*/d*t* or common mode filter (optional), see page *389*.

1) Not in all frame sizes.

External control connection terminals, frames R1…R5

The layout of the external control connection terminals of the R1 frame is shown below. Layout of the external control connection terminals is identical in frames R1…R5 but the location of the control board with the terminals is different in frames R3…R5.

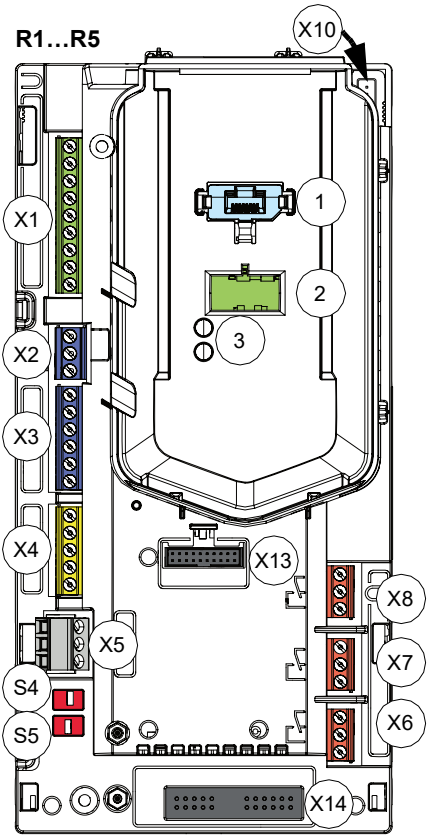

	Description
X1	Analog inputs and outputs
X2	Aux. voltage output
X3	Programmable digital inputs
X4	Safe torque off connection
X5	Embedded fieldbus
X6	Relay output 3
X7	Relay output 2
X8	Relay output 1
X10	Auxiliary fan connection (IP55)
X13	Option slot 1 (fieldbus adapter modules)
X14	Option slot 2 (I/O extension modules)
S4, S5	Termination switch (S4), bias resistor switch (S5), see section *Switches* on page *146* (IEC) or *Switches* on page *146* (North America)
1	Panel port (control panel connection)
2	Cold configuration connection. This connector is used with the CCA-01 configuration adapter.
3	Power OK and Fault LEDs. See section *LEDs* on page *240*.

External control connection terminals, frames R6…R9

The layout of the external control connection terminals of frames R6…R9 is shown below.

R6…R9

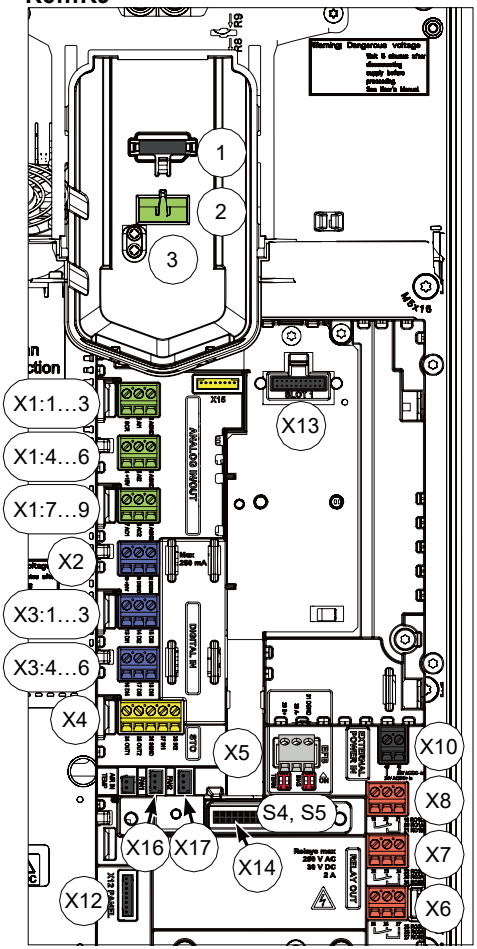

	Description
X1	Analog inputs and outputs
X2	Aux. voltage output
X3	Digital inputs
X4	Safe torque off connection
X5	Connection to embedded EIA-485 fieldbus adapter module
X6	Relay output 3
X7	Relay output 2
X8	Relay output 1
X10	External +24 V AC/DC input connection
X12	Panel connection
X13	Option slot 1 (fieldbus adapter modules)
X14	Option slot 2 (I/O extension modules)
X16	Auxiliary fan 1 connection
X17	Auxiliary fan 2 connection
S4, S5	Termination switch (S4), bias resistor switch (S5), see section *Switches* on page *146* (IEC) or *Switches* on page *146* (North America)
1	Panel port (control panel connection)
2	Cold configuration connection. This connector is used with the CCA-01 configuration adapter.
3	Power OK and Fault LEDs. See section *LEDs* on page *240*.

WARNING! Do not connect the +24 V AC cable to the control board ground when the control board is powered using an external 24 V AC supply.

Control panel

To remove the control panel, press the retaining clip at the top (1a) and pull it forward from the top edge (1b).

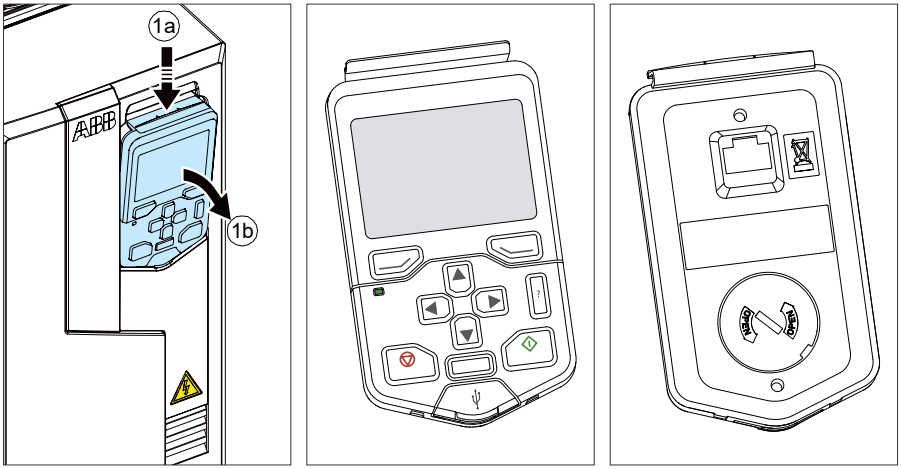

To reinstall the control panel, put the bottom of the container in position (1a), press the retaining clip at the top (1b) and push the control panel in at the top edge (1c).

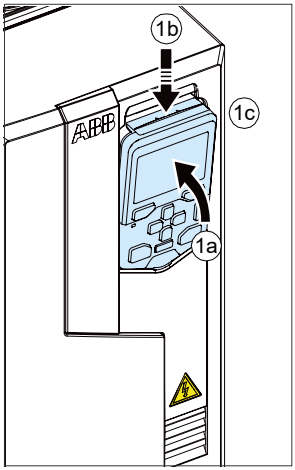

For the use of the control panel, see *ACH580 HVAC control program firmware manual* (3AXD50000027537 [English]) and *ACX-AP-X assistant control panels user's manual* (3AUA0000085685 [English]).

Control panel door mounting kits

Door mounting kits for the control panel are available.

For more information, see *DPMP-01 mounting platform for control panels* (3AUA0000100140 [English]), *DPMP-02/03 mounting platform for control panels* (3AUA0000136205 [English]) or *DPMP-06/07 mounting platform for control panels* (3AXD50000289561 [English]).

Type designation label

The type designation label includes IEC and UL (NEC) ratings, appropriate markings and the type designation and serial number, which allow identification of each drive. The type designation label is located on the left side of the drive, see section *Locations of the labels on the drive*. An example label is shown below.

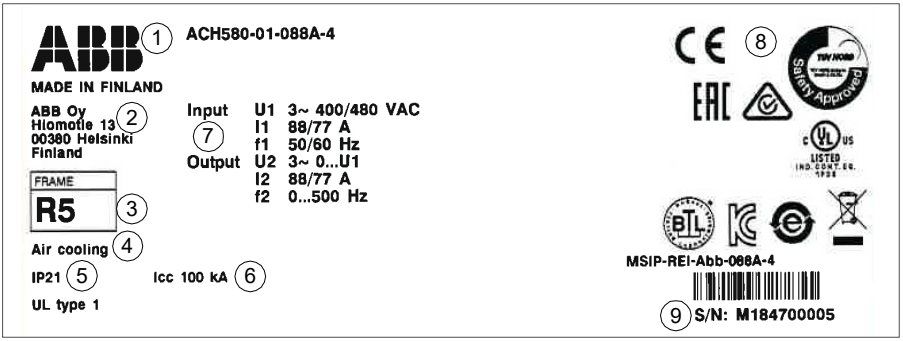

No.	Description
1	Type designation, see section *Type designation key* on page *49*.
2	Name and address of the manufacturer
3	Frame (size)
4	Type of the drive, for example, with Air cooling or Liquid cooling, and so on.
5	Degree of protection
6	IEC: Icc (Rated conditional short-circuit current) = 100 kA, UL (NEC): SCCR (Short circuit current rating) = 100 kA
7	Nominal ratings in the supply voltage range, see section *Electrical ratings* on page *244*, section *Electrical power network specification* on page *286* and section *Motor connection data* on page *286*. See page *286* for further information on input voltage range.
8	Valid markings
9	S/N: Serial number of format MYYWWXXXX, where M: Manufacturing plant YY: 16, 17, 18, … for 2016, 2017, 2018, … WW: 01, 02, 03, … for week 1, week 2, week 3, … XXXXX: Digits making the serial number unique

Locations of the labels on the drive

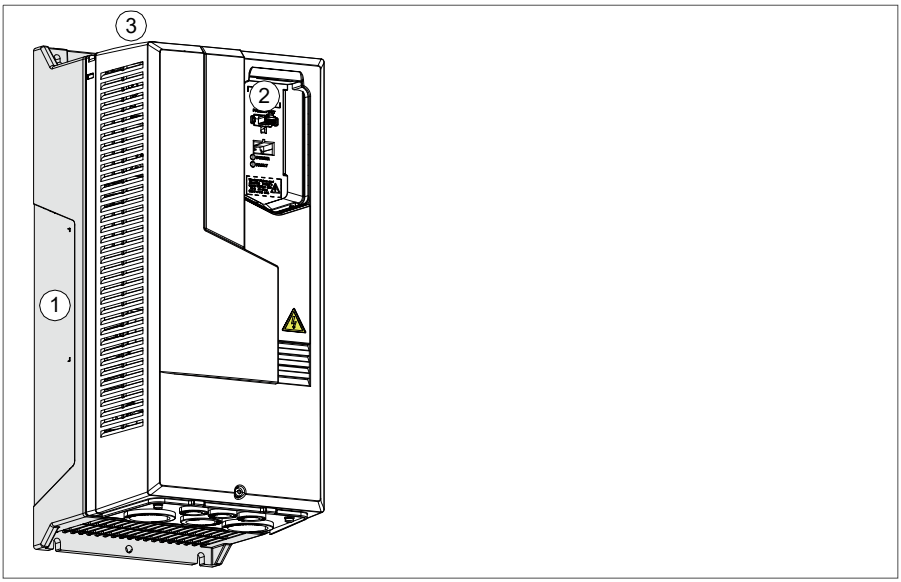

1	ABB MADE IN FINLAND ABB Oy Hiomotie 13 00380 Helsinki Finland FRAME R5 Air cooling IP21 Icc 100 kA UL type 1 ACH580-01-088A-4 Input U1 3~ 400/480 VAC I1 88/77 A f1 50/60 Hz Output U2 3~ 0...U1 I2 88/77 A f2 0...500 Hz MSIP-REI-Abb-088A-4 S/N: M184700005
2	ACH580-01-088A-4 S/N: M184700005 SW v2.07.0.2
3	U1 3~ 400/480 VAC I2 88/77 A Pn 45 kW/60 hp ACH580-01-088A-4 S/N: M184700005 **Note:** Pn is not shown in UL (NEC) drive labels.

Type designation key

The type designation contains information on the specifications and configuration of the drive. You find the type designation on the type designation label attached to the drive. The first digits from the left express the basic configuration, for example, ACH580-01-12A7-4. The optional selections are given after that, separated by plus signs, for example, +L501. The main selections are described below. Not all selections are available for all types.

ACH580-01-206A-4+B056+J400+...

① ② ③ ④

	CODE	DESCRIPTION
	Basic codes	
①	ACH580	Product series
	01	When no options are selected: Wall mounted, IP21 (UL Type 1), control panel with a USB port, choke, EMC C2 filter (internal EMC filter), safe torque off, coated boards, cable lead through entry from the bottom, cable box or the conduit plate with cable entries, quick installation and start-up guide (multilingual).
②	**Size**	
	xxxx	Refer to the rating table, page *244*
③	**Voltage rating**	
	4	2 = 200…240 V 4 = 380…480 V 6 = 575…600 V See page *286* for further information.
④	**Option codes (plus codes)**	
	Control panel and panel options	
	J400	ACH-AP-H Hand-Off-Auto control panel (as standard)
	J424	CDUM-01 Blank control panel cover (no control panel)
	J429	ACH-AP-W Hand-Off-Auto control panel with a Bluetooth interface
	I/O (one slot available for I/O options)	
	L501	CMOD-01 External 24 V AC/DC and digital I/O extension (2×RO and 1×DO)
	L512	CHDI-01 115/230 V Digital input extension (6×DI and 2×RO)
	L523	CMOD-02 External 24 V AC/DC and isolated PTC interface
	L537	CPTC-02 ATEX certified PTC interface and external 24 V. Requires option Q971. Europe only.
	Safety	
	Q971	ATEX certified safe disconnection function, EX II (2) GD. Available only with option L357. Europe only.

	CODE	DESCRIPTION
	Fieldbus adapters	
	K451	FDNA-01 DeviceNet™
	K452	FLON-01 LonWorks®
	K454	FPBA-01 PROFIBUS DP
	K455	FMBA-01 Modbus
	K457	FCAN-01 CANopen
	K458	FSCA-01 Modbus/RTU
	K462	FCNA-01 ControlNet™
	K465	FBIP-21 BACnet/IP (2-port)
	K469	FECA-01 EtherCAT
	K470	FEPL-02 Ethernet POWERLINK
	K475	FENA-21 Two-port Ethernet (EtherNet/IP™, Modbus/TCP, PROFINET)
	K490	FEIP-21 Two-port EtherNet/IP
	K491	FMBT-21 Two-port Modbus/TCP
	K492	FPNO-21 Two-port PROFINET IO
	Embedded fieldbus	
		Embedded fieldbus, EIA-485 as standard
	Construction	
	B056	IP55 (UL type 12). Factory option, retro-fit not possible.
	C135	Flange mounting kit. Flange mounting kit is ordered separately North America, not with a plus code.
	E223	EMC filter, category C1 for earthed network. For frame sizes R1…R5. Requires option B056. IEC only.
	F278	Main switch. For frame sizes R1…R5. Requires option B056. IEC only. Valid for APAN region.
	F316	Main switch and EMC filter, category C1 for earthed network. For frame sizes R1…R5. Requires option B056. IEC only.
	H358	Cable conduit plate, blank.

	CODE	DESCRIPTION
	Full set of printed manuals in selected language. **Note:** The delivered manual set may include manuals in English if the translation is not available. **Note:** These options are not available in North America. You can find manuals in PDF format on the Internet. See section *Document library on the Internet* on the inside of the back cover.	
	R700	English
	R701	German
	R702	Italian
	R703	Dutch
	R704	Danish
	R705	Swedish
	R706	Finnish
	R707	French
	R708	Spanish
	R709	Portuguese (Brazil)
	R711	Russian
	R712	Chinese
	R714	Turkish

3AXD10000324814

4

Mechanical installation

Contents of this chapter

This chapter tells how to check the installation site, unpack, check the delivery and install the drive mechanically.

Safety

WARNING! Frames R5…R9: Lift the drive with a lifting device. Use the lifting eyes of the drive. Do not tilt the drive. **The drive is heavy and its center of gravity is high. An overturning drive can cause physical injury.**

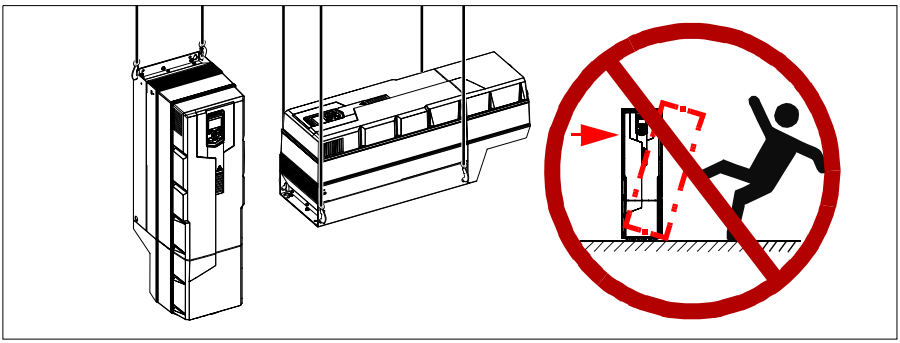

Checking the installation site

The drive must be installed on the wall or an enclosure. There are three alternative ways to install it:

- Vertical.

  Note: Do not install the drive upside down.

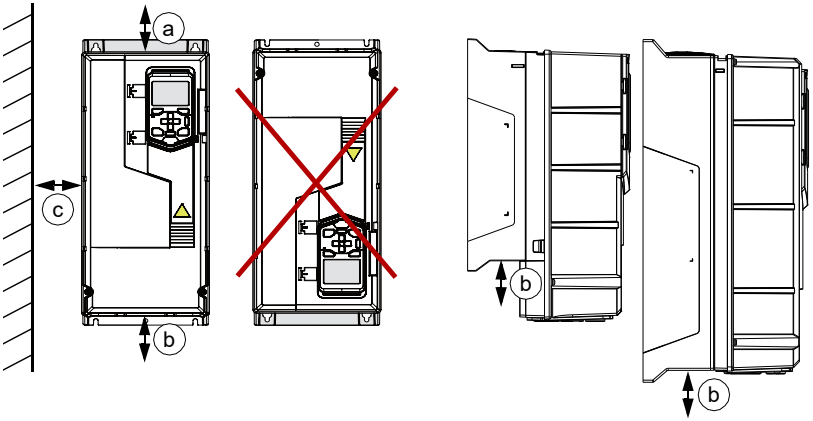

Frame size	Vertical installation - Free space											
	IP21 (UL Type 1)						IP55 (UL Type 12)					
	Above (a)[1]		Below (b)[2]		Beside (c)[3]		Above (a)[1]		Below (b)[2]		Beside (c)[3]	
	mm	in	mm	in	mm	in	mm	in	mm	in	mm	in
R1	150	5.91	86	3.39	150	5.91	137	5.39	116	4.57	150	5.91
R2	150	5.91	86	3.39	150	5.91	137	5.39	116	4.57	150	5.91
R3	200	7.87	53	2.09	150	5.91	200	7.87	53	2.09	150	5.91
R4	53	2.09	200	7.87	150	5.91	53	2.09	200	7.87	150	5.91
R5	100	3.94	200	7.87	150	5.91	100	3.94	200	7.87	150	5.91
R6	155	6.10	300	11.81	150	5.91	155	6.10	300	11.81	150	5.91
R7	155	6.10	300	11.81	150	5.91	155	6.10	300	11.81	150	5.91
R8	155	6.10	300	11.81	150	5.91	155	6.10	300	11.81	150	5.91
R9	200	7.87	300	11.81	150	5.91	200	7.87	300	11.81	150	5.91

3AXD00000586715.xls L

[1] Free space above is measured from the frame, not from the hood used in UL Type 12 frames.
Note: The height of the hood for frames R4 and R9 exceeds the requirement of free space above for these frames

Frame size	R4	R9
Hood height (in)	2.83	9.06
Hood height (mm)	72	230

[2] Free space below is always measured from the drive frame, not from the cable box

[3] Free space between the drive and other objects, e.g. wall.

Note: The recommended free space above and below the drive is for installations where the drive is mounted on a wall indoors. For ABB cabinet-built drives, which are thermally tested and approved for a specified temperature range, free space could vary from this recommendation.

- Vertical side by side

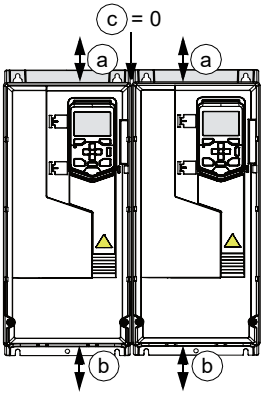

Frame size	Vertical installation side by side - Free space, IP21 (UL Type 2) and IP55 (UL Type 12)					
	Above (a)[1]		Below (b)[2]		Between (c)[3]	
	mm	in	mm	in	mm	in
R1	200	7.87	200	7.87	0	0
R2	200	7.87	200	7.87	0	0
R3	200	7.87	200	7.87	0	0
R4	200	7.87	200	7.87	0	0
R5	200	7.87	200	7.87	0	0
R6	200	7.87	300	11.81	0	0
R7	200	7.87	300	11.81	0	0
R8	200	7.87	300	11.81	0	0
R9	200	7.87	300	11.81	0	0

3AXD00000586715.xls L

[1] Free space above is measured from the frame, not from the hood used in UL Type 12 frames.
Note: The height of the hood for frames R4 and R9 exceeds the requirement of free space above for these frames.

Frame size	R4	R9
Hood height (in)	2.83	9.06
Hood height (mm)	72	230

[2] Free space below is always measured from the drive frame, not from the cable box.
[3] Free space between the drives.

Note: The recommended free space above and below the drive is for installations where the drive is mounted on a wall indoors. For ABB cabinet-built drives, which are thermally tested and approved for a specified temperature range, free space could vary from this recommendation.

Notes for IP55 (UL Type 12) frames R1…R3:

- Auxiliary fan maintenance cannot be performed without removing every second drive from installation to get access to the fan.
- The cover fastening clips can be removed to make the front cover opening easier.

- Horizontal, IP20 and IP55, R1…R5 only

  Note 1: You can install IP21 / UL Type 1 drives horizontally but the installation **meets IP20 requirements only.**

  Note 2: IP55/Type 12 drive mounted horizontally meet IP21/Type 1 ratings.

  Note 3: In the horizontal mounting, the drive is not protected from dripping water.

  Note 4: The vibration specification in section *Ambient conditions* on page *296* may not be fulfilled.

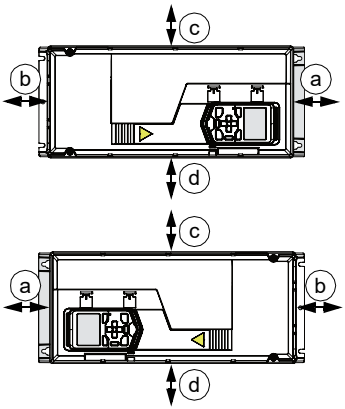

Frame size	Horizontal installation - Free space							
	IP21 (IP20)				IP55 (UL Type 12)			
	Above (a)		Below (b)[1)]		Above (a)		Below (b)[1)]	
	mm	in	mm	in	mm	in	mm	in
R1	150	5.91	86	3.39	137	5.39	116	4.57
R2	150	5.91	86	3.39	137	5.39	116	4.57
R3	200	7.87	53	2.09	200	7.87	53	2.09
R4	30	1.18	200	7.87	30	1.18	200	7.87
R5	30	1.18	200	7.87	30	1.18	200	7.87
Frame size	**Side up (c)**		**Side down (d)**		**Side up (c)**		**Side down (d)**	
	mm	in	mm	in	mm	in	mm	in
R1	30	1.18	200	7.87	30	1.18	200	7.87
R2	30	1.18	200	7.87	30	1.18	200	7.87
R3	30	1.18	200	7.87	30	1.18	200	7.87
R4	30	1.18	200	7.87	30	1.18	200	7.87
R5	30	1.18	200	7.87	30	1.18	200	7.87

3AXD00000586715.xls L

[1)] Free space below is always measured from the drive frame, not from the cable box.

Check the installation site according to the requirements below:

- The installation site is sufficiently ventilated or cooled to remove the heat away from the drive. See section *Losses, cooling data and noise* on page *275*.
- The operation conditions of the drive meet the specifications given in section *Ambient conditions* on page *296*.
- The wall is as close to vertical as possible, of non-flammable material and strong enough to carry the weight of the drive, see section *Dimensions, weights and free space requirements* on page *270*.
- The floor/material below the installation is non-flammable.
- There is enough free space above and below the drive to enable cooling air flow, service and maintenance, See the required free space tables for each of the different mounting alignments on page *54* (or page *270*).

Required tools

To install the drive mechanically, you need the following tools:

- drill with suitable bits
- screwdriver set (Torx, flat and/or Phillips, as appropriate)
- socket set (metric and SAE)
- tape measure, if you will not be using the provided mounting template.

Moving the drive

Frames R5…R9: Move the transport package by pallet truck to the installation site.

Unpacking and examining delivery, frames R1 and R2

The figure below shows the layout of the transport package. Examine that all items are present and there are no signs of damage. Read the data on the type designation label of the drive to make sure that the drive is of the correct type. See section *Type designation label* on page *47*.

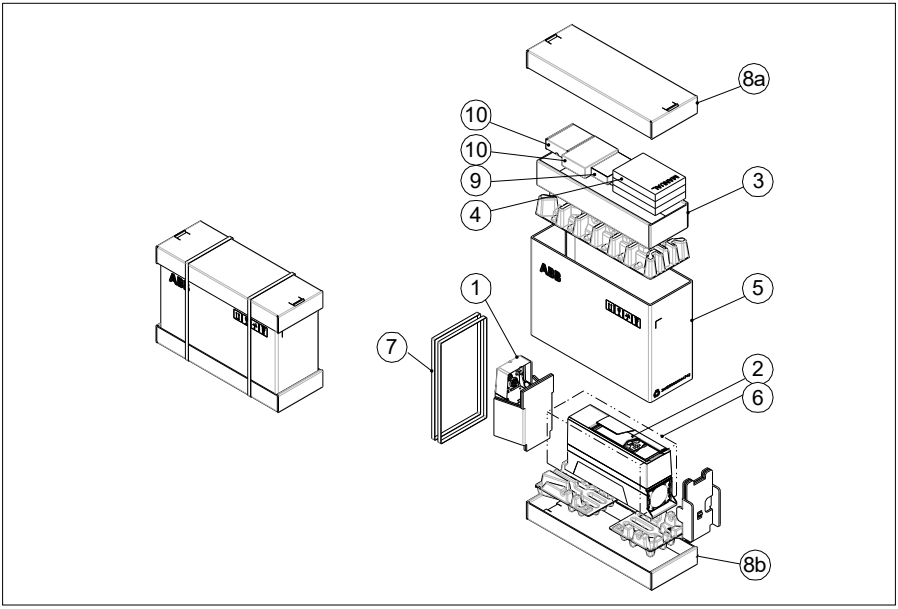

1	Cable box package. **Note:** The cable box is mounted to the IP55 drive module frame at the factory.
2	Drive
3	Option tray
4	In the option tray • Europe: Multilingual quick installation and start-up guide (always), and Hardware and firmware manuals (if ordered with a plus code) • North America: English Installation, Operation, and Maintenance manual (I, O & M) • Multilingual residual voltage warning stickers
5	Cardboard box. Mounting template in the cardboard box.

6	Plastic bag
7	Straps
8	Tray
9	Control panel selected in the order (in a separate package) in the option box. North America: Control panel factory installed.
10	Possible options in separate packages, if they have been ordered with a plus code, such as for example +K490 (FEIP-21 Two-port EtherNet/IP adapter module) in the option box. North America: Options may be ordered as factory installed.
Note: Hood included with option +B056 (IP55/UL Type 12) in North America	

To unpack:

- Cut the straps (7).
- Remove the upper tray (8a) and option tray (3).
- Remove the cardboard box (5).
- Remove the plastic bag (6).
- Lift the drive (2).

Recycle the package material according to local regulations.

Frames R1 and R2 cable box (IP21, UL Type 1)

This illustration shows the contents of the cable box package. The package also includes an assembly drawing which shows how to install the cable box to the drive module frame.

Follow the installation instructions in section *Installing the drive vertically, frames R1…R4* on page *73*.

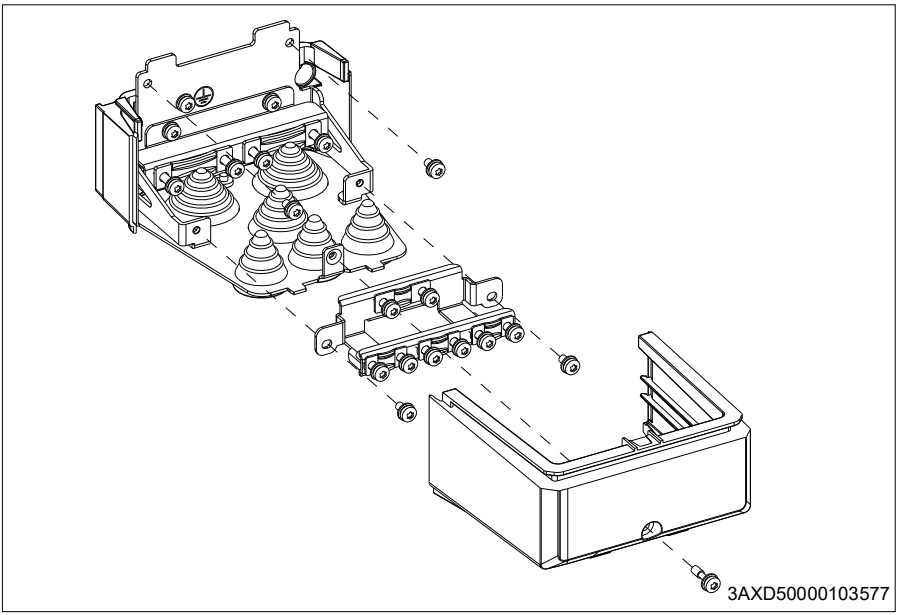

Unpacking and examining delivery, frame R3

The figure below shows the layout of the transport package. Examine that all items are present and there are no signs of damage. Read the data on the type designation label of the drive to make sure that the drive is of the correct type. See section *Type designation label* on page *47*.

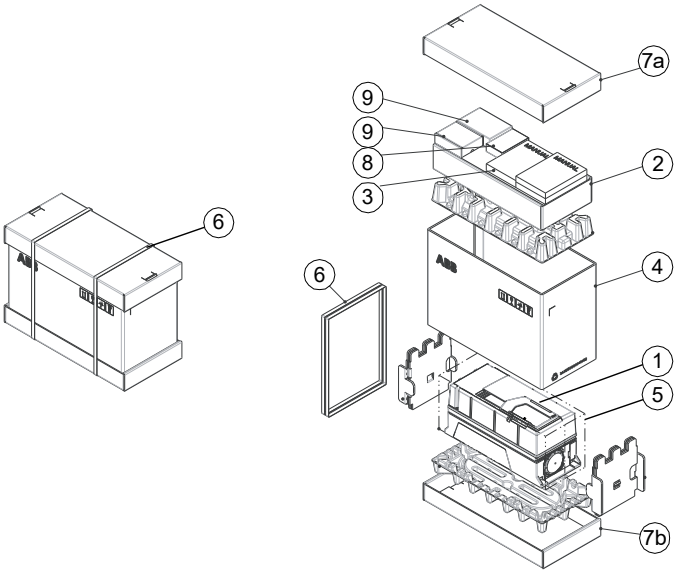

1	Drive
2	Option tray
3	In the option tray • Europe: Multilingual quick installation and start-up guide (always), and Hardware and firmware manuals (if ordered with a plus code) • North America: English Installation, Operation, and Maintenance manual (I, O & M) • Multilingual residual voltage warning stickers • Mounting template
4	Cardboard box.

5	Plastic bag
6	Straps
7	Tray
8	Control panel selected in the order (in a separate package) in the option box. North America: Control panel factory installed.
9	Possible options in separate packages, if they have been ordered with a plus code, such as for example +K490 (FEIP-21 Two-port EtherNet/IP adapter module) in the option box. North America: Options may be ordered as factory installed.
Note: Hood included with option +B056 (IP55/UL Type 12) in North America	

To unpack:

- Cut the straps (6).
- Remove the upper tray (7a) and option tray (2).
- Remove the cardboard box (4).
- Remove the plastic bag (5).
- Lift the drive (2).

Recycle the package material according to local regulations.

Unpacking and examining delivery, frame R4

The figure below shows the layout of the transport package. Examine that all items are present and there are no signs of damage. Read the data on the type designation label of the drive to make sure that the drive is of the correct type. See section *Type designation label* on page *47*.

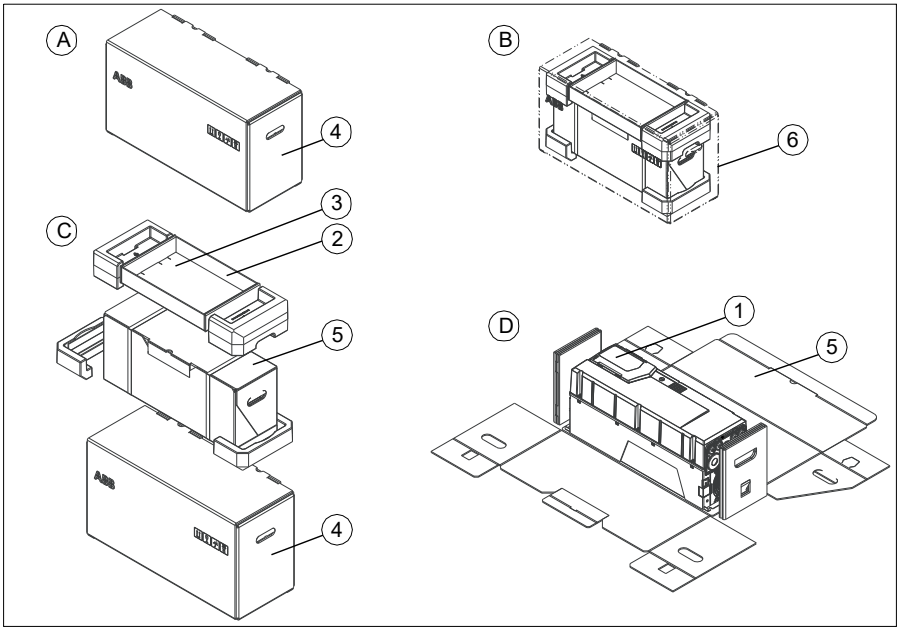

1	Drive
2	Option tray
3	In the option tray • Europe: Multilingual quick installation and start-up guide (always), and Hardware and firmware manuals (if ordered with a plus code) • North America: English Installation, Operation, and Maintenance manual (I, O & M) • Multilingual residual voltage warning stickers • Control panel selected in the order (in a separate package) in the option box. North America: Control panel factory installed. • Possible options in separate packages, if they have been ordered with a plus code, such as for example +K490 (FEIP-21 Two-port EtherNet/IP adapter module) in the option box. North America: Options may be ordered as factory installed.
4	Cardboard box
5	Inner box with edge boards and cushions. Mounting template in the inner box.
6	Plastic bag
Note: Hood included with option +B056 (IP55/UL Type 12) in North America	

To unpack:

- Cut the straps.
- Open box (4) and remove top cushions and option tray (2).
- Lift out the inner box (5).
- Open the inner box (5), lift the drive (1) and remove plastic bag (7).

Recycle the package material according to local regulations.

Unpacking and examining delivery, frame R5

The figure below shows the layout of the transport package. Examine that all items are present and there are no signs of damage. Read the data on the type designation label of the drive to make sure that the drive is of the correct type. See section *Type designation label* on page *47*.

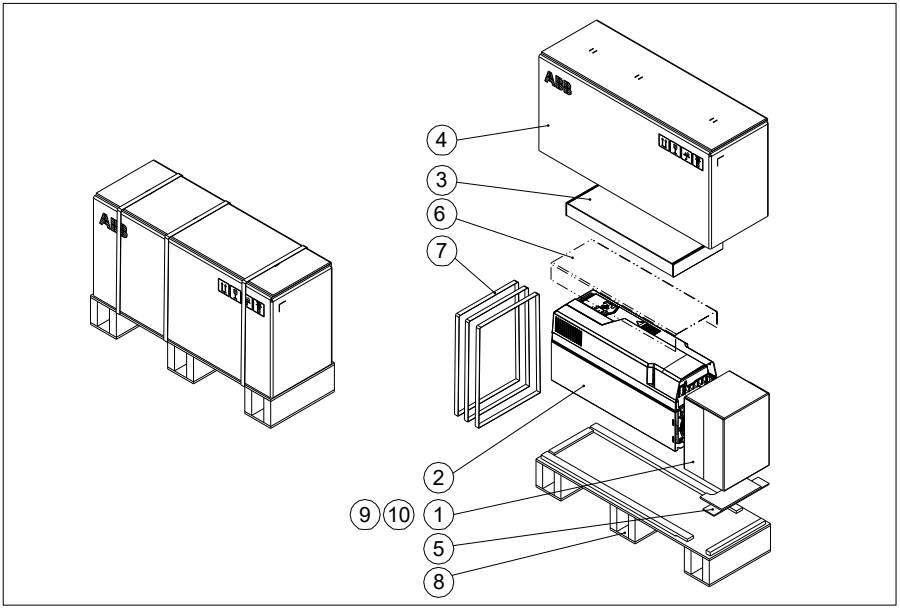

1	Cable box package. **Note:** The cable box is mounted to the IP55 drive module frame at the factory.
2	Drive
3	In the option box • Europe: Multilingual quick installation and start-up guide (always), and Hardware and firmware manuals (if ordered with a plus code) • North America: English Installation, Operation, and Maintenance manual (I, O & M) • Multilingual residual voltage warning stickers
4	Cardboard box. Mounting template in the cardboard box.

5	Stopper
6	Cover protecting film
7	Straps
8	Pallet
9	Control panel selected in the order (in a separate package) in the option box. North America: Control panel factory installed.
10	Possible options in separate packages, if they have been ordered with a plus code, such as for example +K490 (FEIP-21 Two-port EtherNet/IP adapter module) in the option box. North America: Options may be ordered as factory installed.
Note: Hood included with option +B056 (IP55/UL Type 12) in North America	

To unpack:

- Cut the straps (7).
- Remove the cardboard box (4) and option box (3).
- Remove the cover protecting film (6).
- Lift the drive (2).

Recycle the package material according to local regulations.

Frame R5 cable box (IP21, UL Type 1)

This illustration shows the contents of the cable box package. The package also includes an assembly drawing which shows how to install the cable box to the drive module frame.

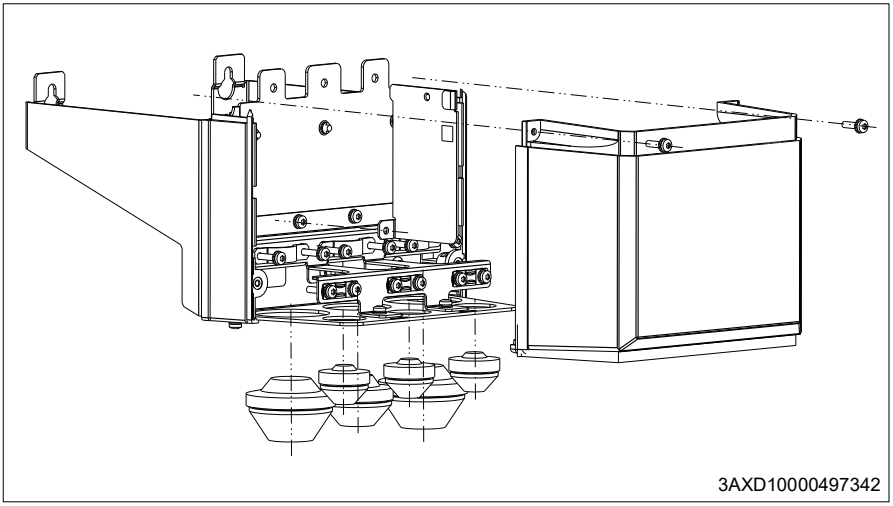

Unpacking and examining delivery, frames R6…R9

The figure below shows the layout of the transport package. Examine that all items are present and there are no signs of damage. Read the data on the type designation label of the drive to make sure that the drive is of the correct type. See section *Type designation label* on page *47*.

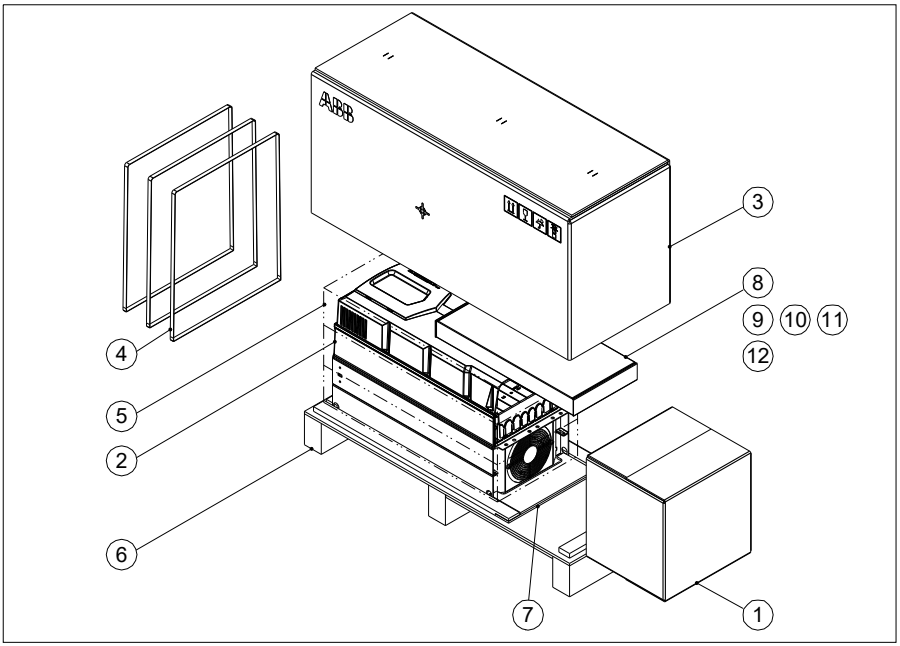

1	Cable box. Power and control cable grounding shelves in a plastic bag, assembly drawing. **Note**: The cable box is mounted to the IP55 drive module frame at the factory.
2	Drive with factory installed options.
3	Cardboard box
4	Straps
5	VCI bag for protecting against corrosion
6	Pallet
7	Stopper
8	Option tray
9	In the option tray • Europe: Multilingual quick installation and start-up guide (always), and Hardware and firmware manuals (if ordered with a plus code) • North America: English Installation, Operation, and Maintenance manual (I, O & M) • Multilingual residual voltage warning stickers
10	Control panel selected in the order (in a separate package) in the option tray. North America: Control panel factory installed.
11	Possible options in separate packages, if they have been ordered with a plus code, such as for example +K490 (FEIP-21 Two-port EtherNet/IP adapter module) in the option tray. North America: Options may be ordered as factory installed.
12	Mounting template on top of the option tray
Note: Hood included with option +B056 (IP55/UL Type 12) in North America	

To unpack:

- Cut the straps (4).
- Remove the cardboard box (3) and option tray (8).
- Remove the VCI bag (5).
- Attach lifting hooks to the lifting eyes of the drive (see the figure on page 53). Lift the drive with a hoist.

Recycle the package material according to local regulations.

Frame R6 cable box (IP21, UL Type 1)

The figure below shows the contents of the cable box package. The package also includes an assembly drawing which shows how to install the cable box to the drive frame.

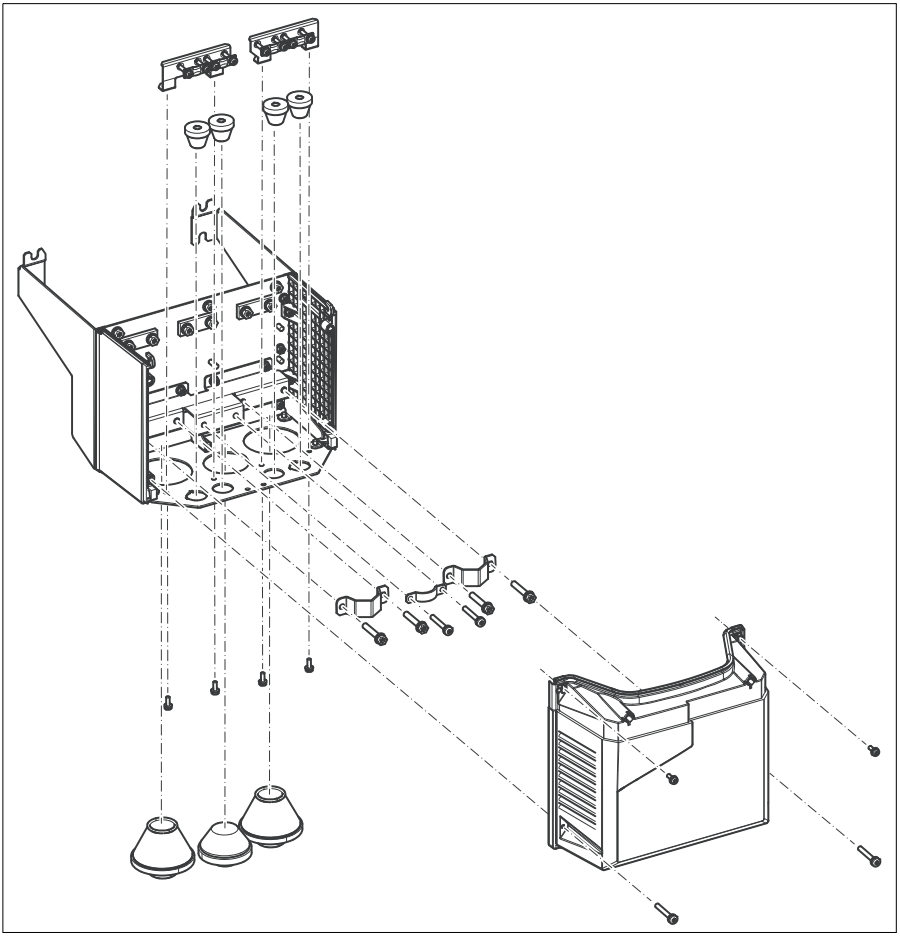

Frame R7 cable box (IP21, UL Type 1)

The figure below shows the contents of the cable box package. The package also includes an assembly drawing which shows how to install cable box to the drive frame.

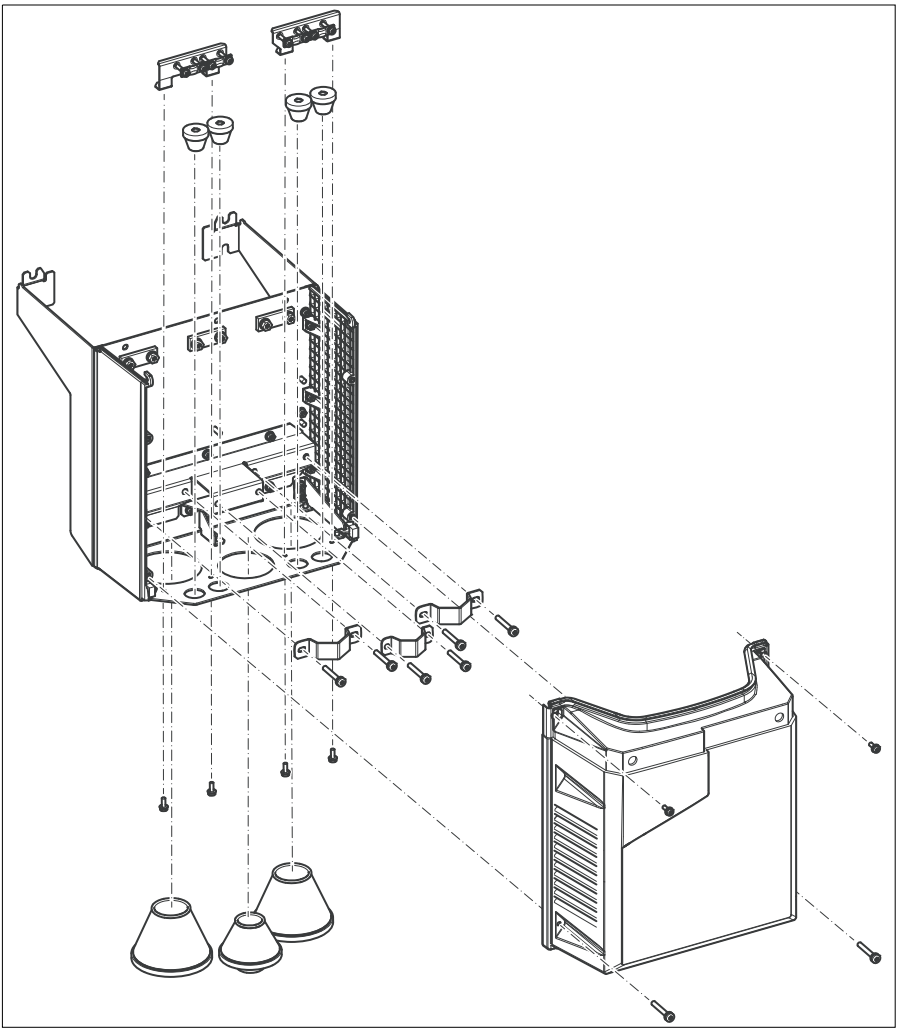

Frame R8 cable box (IP21, UL Type 1)

The figure below shows the contents of the cable box package. The package also includes an assembly drawing which shows how to install the cable box to the drive frame.

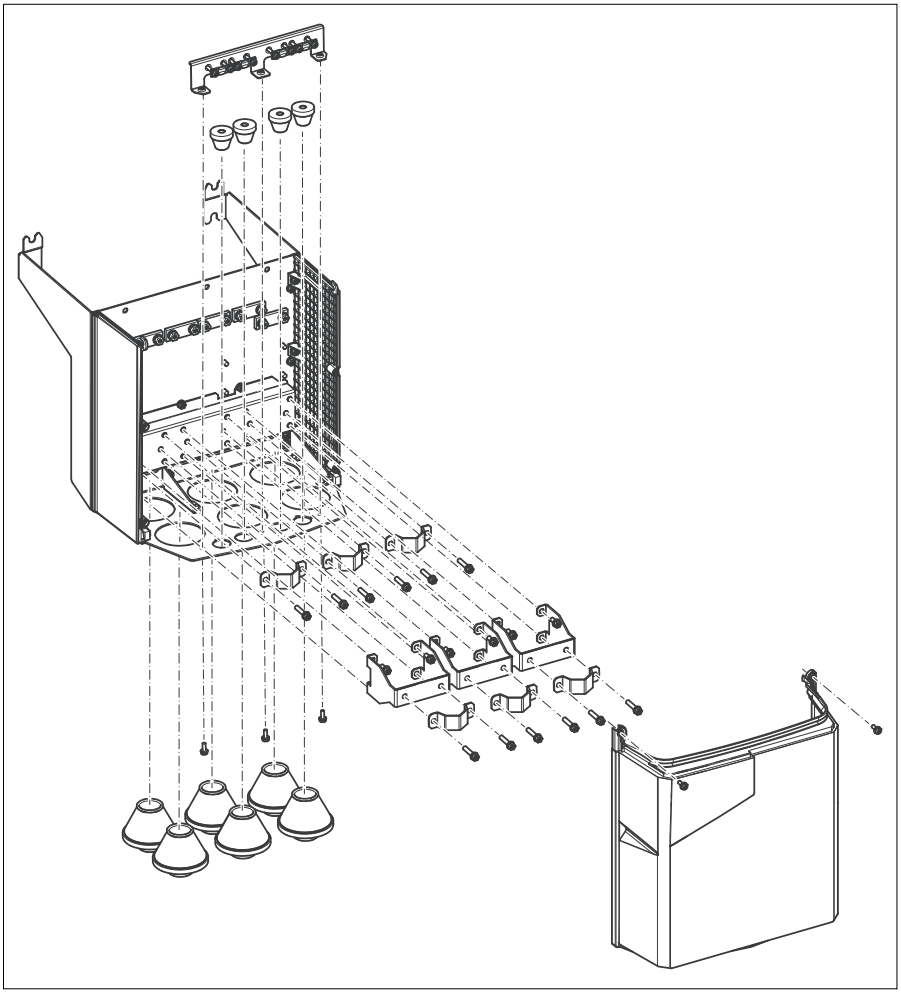

Frame R9 cable box (IP21, UL Type 1)

The figure below shows the contents of the cable box package. The package also includes an assembly drawing which shows how to install the cable box to the drive frame.

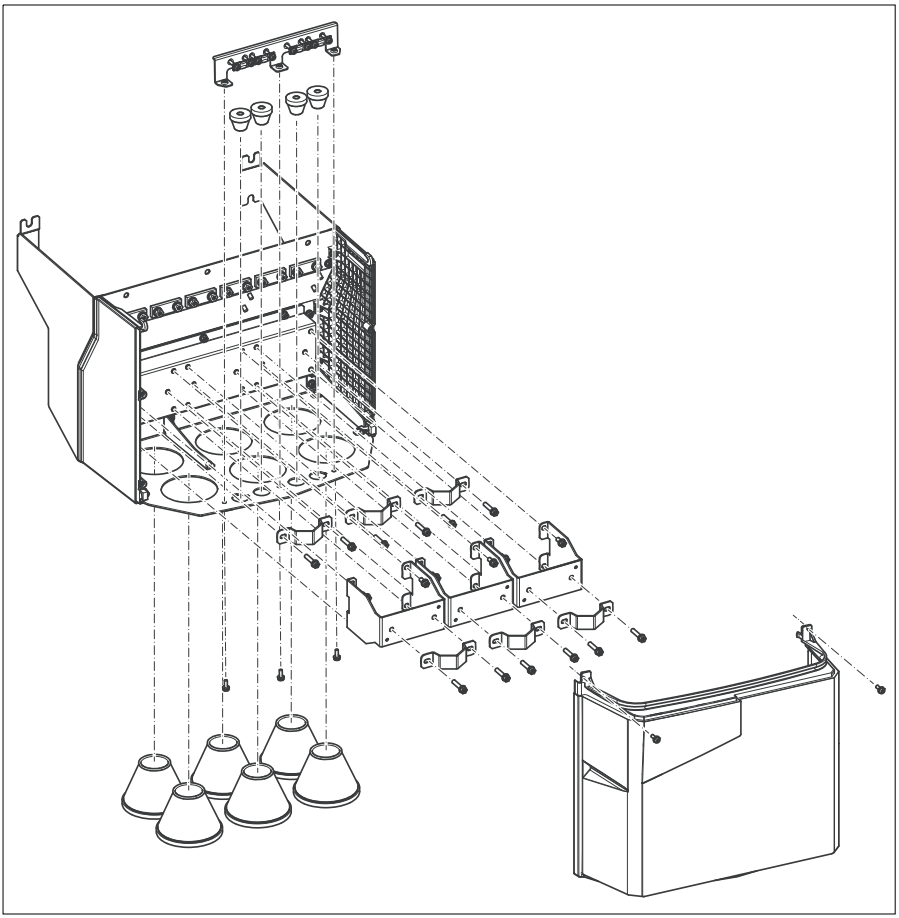

Installing the drive

Installing the drive vertically, frames R1…R4

The figures show frame R3 as an example.

Select fasteners and their application to meet local requirements appropriate to wall surface materials, drive weight and application.

1. Mark the hole locations using the mounting template included in the package. Do not leave the mounting template under the drive. The drive dimensions and hole locations are also shown in the drawings in chapter *Dimension drawings* on page *309*.
2. Drill the mounting holes.
3. Insert anchors or plugs into the holes and start the bolts into the anchors or plugs.

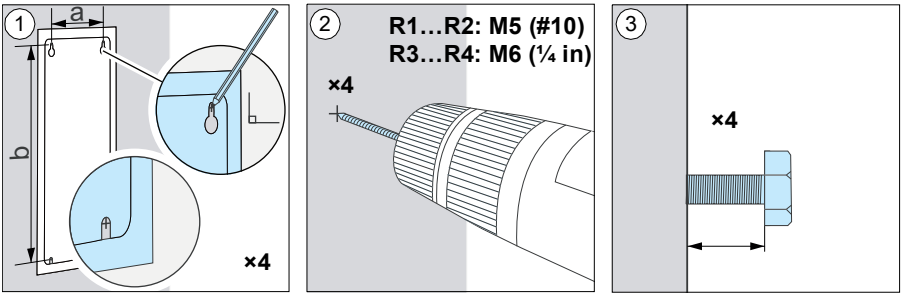

	R1		R2		R3		R4	
	mm	in	mm	in	mm	in	mm	in
a	98	3.86	98	3.86	160	6.30	160	6.30
b	317	12.48	417	16.42	473	18.62	619	24.37
Weight IP21 (UL Type 1)	kg	lb	kg	lb	kg	lb	kg	lb
	4.6	10.1	6.6	14.6	11.8	26.0	19.0	41.9
Weight IP55 (UL Type 12)	kg	lb	kg	lb	kg	lb	kg	lb
	4.8	10.6	6.8	15.0	13.0	28.7	20.0	44.1

4. Position the drive onto the lower bolts (4a) on the wall to support the weight of the drive. Rotate drive to the wall and place drive over the upper bolts (4b).
5. Tighten the bolts in the wall securely.

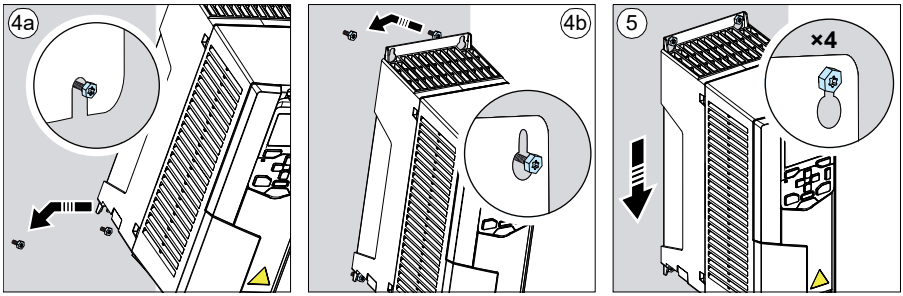

Install the cable box, frames R1…R2

6. Remove the screw (6a) and lift the cover off (6b) from the separate cable box.
7. Attach the cable box cover to the front cover.
8. Install the cable box to the frame. Position the cable box (8a) and tighten the screws (8b).

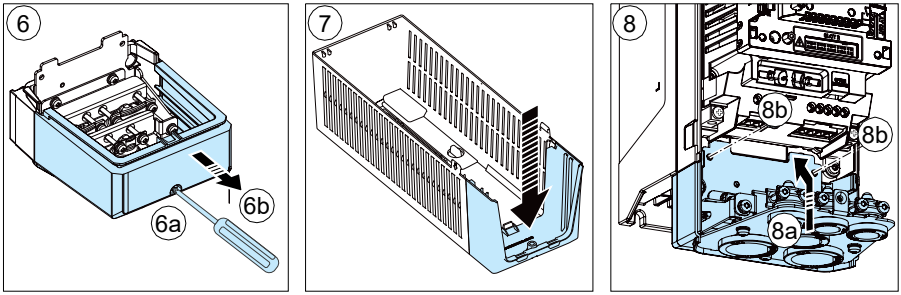

Note: Install the hood to UL Type 12 drives after you have installed the drive electrically and reinstalled covers, see page 220.

Installing the drive vertically, frame R5

Select fasteners and their application to meet local requirements appropriate to wall surface materials, drive weight and application.

1. Mark the hole locations using the mounting template included in the package. Do not leave the mounting template under the drive. The drive dimensions and hole locations are also shown in the drawings in chapter *Dimension drawings* on page *309*.
2. Drill the mounting holes.
3. Insert fixing anchors or plugs into the holes. Start the two upper bolts and the two lowest bolts into the anchors or plugs.

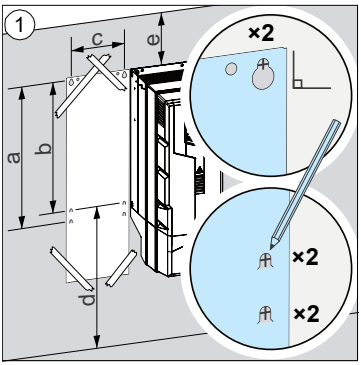

	R5 IP21 (UL Type 1)		R5 IP55 (UL Type 12)	
	mm	in	mm	in
a	612	24.09	612	24.09
b	581	22.87	581	22.87
c	160	6.30	160	6.30
d >	200	7.87	200	7.87
e >	100	3.94	100	3.94

	R5 IP21 (UL Type 1)		R5 IP55 (UL Type 12)	
	kg	lb	kg	lb
	28.3	62.4	29.0	64.0

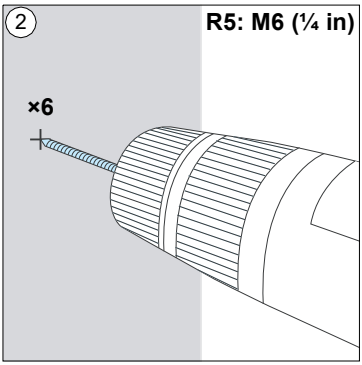

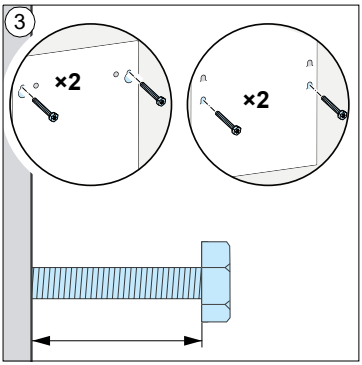

IP21 (UL Type 1)

4. Remove the front cover: Remove the fastening screws (4a) with a T20 Torx screwdriver and lift the cover from the bottom upwards (4b) and then to the top side (4c).
5. Attach the cable box to the drive frame.
6. Tighten the box nuts.
7. Slide the box cover from the bottom (7a) and tighten the retaining screws (7b).
8. Put the tabs at the top of the front cover in their counterparts on the housing and then press at the bottom (8a) and tighten the retaining screws (8b).

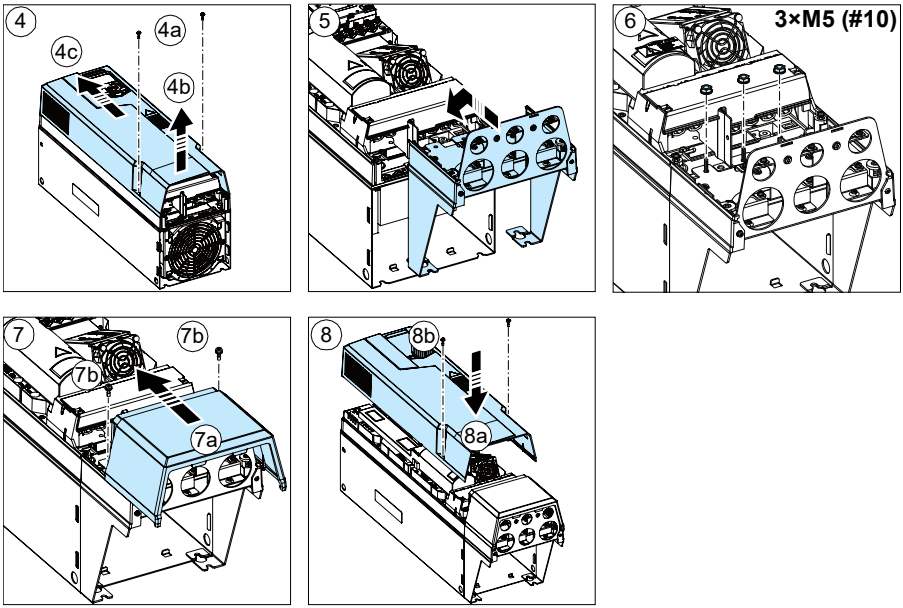

IP21 (UL Type 1), IP55 (UL Type 12)

9. Position the drive onto the lower bolts (9a) on the wall to support the weight of the drive. Rotate drive to the wall and place drive over the upper bolts (9b). Lift the drive with another person or with a lifting device as it is heavy. Tighten the bolts in the wall securely (9c).

10. Tighten the two remaining bolts securely.

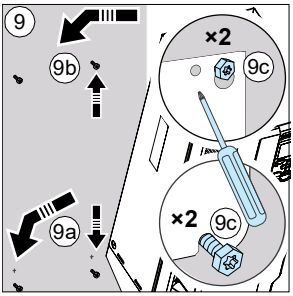

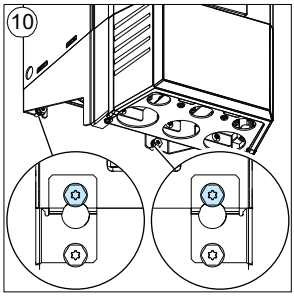

Note: Install the hood on UL Type 12 drives after you have installed the drive electrically and reinstalled covers, see page *220*.

Installing the drive vertically, frames R6…R9

Select fasteners and their application to meet local requirements appropriate to wall surface materials, drive weight and application.

1. Mark the hole locations for the six mounting holes using the mounting template included in the package. Do not leave the mounting template under the drive.

   The drive dimensions and hole locations are also shown in the drawings in chapter *Dimension drawings* on page *309*.

Note: You can use only two bolts instead of four to attach the lower part of the drive.

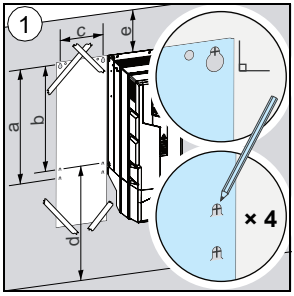

	R6		R7		R8		R9	
	mm	in	mm	in	mm	in	mm	in
a	571	22.5	623	24.5	701	27.6	718	28.3
b	531	20.9	583	23.0	658	25.9	658	25.9
c	213	8.4	245	9.7	263	10.3	345	13.6
d	300	11.8	300	11.8	300	11.8	300	11.8
e	155	6.1	155	6.1	155	6.1	200	7.9
IP21, UL Type 1	kg	lb	kg	lb	kg	lb	kg	lb
⚠	42.4	93.5	54	119.1	69	152.2	97	213.9
IP55, UL Type 12	kg	lb	kg	lb	kg	lb	kg	lb
⚠	43.0	94.8	56	123.5	77	169.8	103	227.1

2. Drill the mounting holes.
3. Insert fixing anchors or plugs into the holes and start the bolts into the anchors or plugs.
4. Position the drive onto the bolts on the wall. Lift the drive with a lifting device as it is heavy.
5. Tighten the top two bolts in the wall securely.

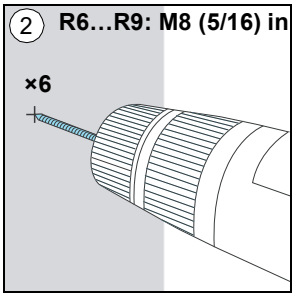

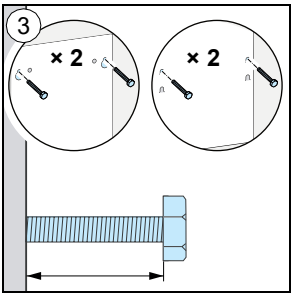

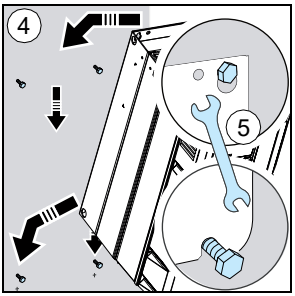

IP21 (UL Type 1)

6. Remove the front cover: Remove the fastening screws (a) with a T20 Torx screwdriver, move the cover to the top side (b) and then up (c).
7. Attach the cable box to the drive frame.
8. Tighten the box bolts: three at the top (8a) and two at the bottom (8b). Also tighten the bottom bolts started in step *3* (8c).

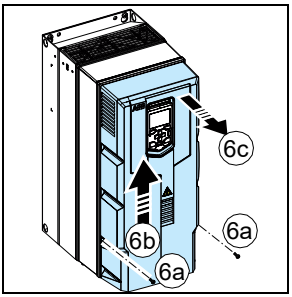

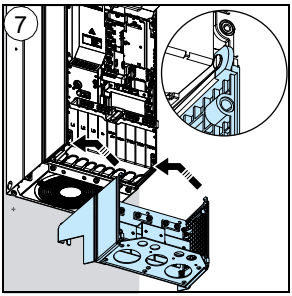

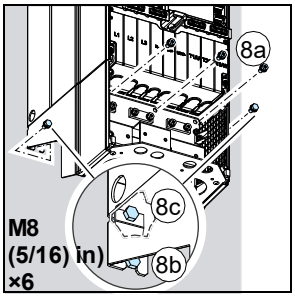

IP55 (UL Type 12)

9. Remove the front cover: Remove the fastening screws (a) with a T20 Torx screwdriver, move the cover to the top side (b) and then up (c).

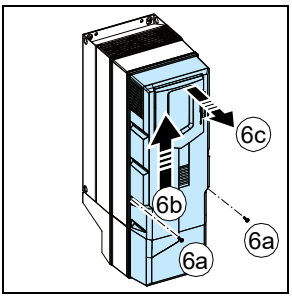

Note: Install the hood for UL Type 12 drives after you have installed the drive electrically and reinstalled covers, see page *220*.

Installing the drive vertically side by side

Install the drive following the steps in the appropriate section *Installing the drive vertically, frames R1…R4* (page *73*), *Installing the drive vertically, frame R5* (page *75*) or *Installing the drive vertically, frames R6…R9* (page *78*).

Installing the drive horizontally, frames R1…R5

Install the drive following the steps in the appropriate section *Installing the drive vertically, frames R1…R4* (page *73*) or *Installing the drive vertically, frame R5* (page *75*). The drive can be installed either the left or right side up.

Flange mounting

Instructions for flange mounting are delivered with the flange mounting kit: *Flange mounting kit quick installation guide for ACX580-01 frames R1 to R3* (3AXD50000119172 [English]), *Flange mounting kit quick installation guide for ACX580-01 frames R4 to R5* (3AXD50000287093 [English]) or *Flange mounting kit quick installation guide for ACS880-01 and ACX580-01 frames R6 to R9* (3AXD50000019099 [English]). For more information on flange mounting, see *Flange mounting kit installation supplement* (3AXD50000019100 [English]).

5

Guidelines for planning the electrical installation

Contents of this chapter

This chapter contains instructions for planning the electrical installation of the drive, for example, for checking the compatibility of the motor and drive, selecting cables, protections and cable routing.

Limitation of liability

The installation must always be designed and made according to applicable local laws and regulations. The manufacturer does not assume any liability whatsoever for any installation which breaches the local laws and/or other regulations. Furthermore, if the recommendations given by the manufacturer are not followed, the drive may experience problems that the warranty does not cover.

Selecting the supply disconnecting device

Install a hand-operated input disconnecting device between the AC power source and the drive. The disconnecting device must be of a type that can be locked to the open position for installation and maintenance work.

European Union

To meet the European Union Directives, according to standard EN 60204-1, *Safety of Machinery*, the disconnecting device must be one of the following types:

- switch-disconnector of utilization category AC-23B (EN 60947-3)
- disconnector that has an auxiliary contact that in all cases causes switching devices to break the load circuit before the opening of the main contacts of the disconnector (EN 60947-3)
- circuit breaker suitable for isolation in accordance with EN 60947-2.

North America

Installations must meet the requirements of UL (UL 508C) and/or CSA (C22.2 No. 14) and be compliant with NFPA 70 (NEC)[1)] and/or Canadian Electrical Code (CE) along with state and local codes for your location and application.

[1)] National Fire Protection Association 70 (National Electric Code).

Other regions

The disconnecting device must conform to the applicable local safety regulations.

Checking the compatibility of the motor and drive

Use an asynchronous AC induction motor, permanent magnet motor or synchronous reluctance motor (SynRM) with the drive. Several induction motors can be operated at a time when using scalar mode. Operation of permanent magnet motors is limited to one connection to the drive at a time.

Check that the motor and the drive are compatible according to the rating table in section *Electrical ratings* on page *244*. The table lists the typical motor power for each drive type.

Ensure that the motor withstands the maximum peak voltage in the motor terminals. See the *Requirements table* on page *84*. For basics of protecting the motor insulation and bearings in drive systems, refer to section *Protecting the motor insulation and bearings* below.

Note:

- Consult the motor manufacturer before using a motor whose nominal voltage differs from the AC line voltage connected to the drive input.
- The voltage peaks at the motor terminals are relative to the supply voltage of the drive, not the drive output voltage.
- If the motor and drive are not of the same size, consider the following operation limits of the drive control program:
  - motor nominal voltage range 1/6 ... 2 · U_N
  - motor nominal current range 1/6 ... 2 · I_N (IEC), or 1/6 ... 2 · I_{LD} (North America), of the drive in vector control and 0 ... 2 · I_N in scalar control. The control mode is selected by a drive parameter.

Protecting the motor insulation and bearings

In North America a d*u*/d*t* filter is typically not used unless the application has very long cable lengths or when they have problems occurring.

The drive employs modern IGBT inverter technology. Regardless of frequency, the drive output comprises pulses of approximately the drive DC voltage with a very short rise time. The pulse voltage can almost double at the motor terminals, depending on the attenuation and reflection properties of the motor cable and the terminals. This can cause additional stress on the motor and motor cable insulation.

Modern variable speed drives with their fast rising voltage pulses and high switching frequencies can generate current pulses that flow through the motor bearings. This can gradually erode the bearing races and rolling elements.

Optional d*u*/d*t* filters protect motor insulation system and reduce bearing currents. Optional common mode filters mainly reduce bearing currents. Insulated N-end (non-drive end) bearings protect the motor bearings.

Requirements table

The following table shows how to select the motor insulation system and when an optional drive d*u*/d*t* and common mode filters and insulated N-end (non-drive end) motor bearings are required. Ignoring the requirements or improper installation may shorten motor life or damage the motor bearings and voids the warranty.

Motor type	**Nominal AC supply voltage**	**Requirement for**		
		Motor insulation system	**ABB d*u*/d*t* and common mode filters, insulated N-end motor bearings**	
			P_N < 100 kW and frame size < IEC 315	**100 kW ≤ P_N < 350 kW or IEC 315 ≤ frame size < IEC 400**
			P_N < 134 hp and frame size < NEMA 500	**134 hp ≤ P_N < 469 hp or NEMA 500 ≤ frame size ≤ NEMA 580**
ABB motors				
Random-wound M2_,M3_ and M4_	U_N ≤ 500 V	Standard	-	+ N
Form-wound HX_ and AM_	380 V < U_N ≤ 690 V	Standard	n.a.	+ N + CMF
Old* form-wound HX_ and modular	380 V < U_N ≤ 690 V	Check with the motor manufacturer.	+ d*u*/d*t* with voltages over 500 V + N + CMF	
Random-wound HX_ and AM_ **	0 V < U_N ≤ 500 V	Enameled wire with fiber glass taping	+ N + CMF	

* manufactured before 1.1.1998

** For motors manufactured before 1.1.1998, contact your local ABB representative.

Motor type	Nominal AC supply voltage	Requirement for		
		Motor insulation system	ABB d*u*/d*t* and common mode filters, insulated N-end motor bearings	
			P_N < 100 kW and frame size < IEC 315	100 kW ≤ P_N < 350 kW or IEC 315 ≤ frame size < IEC 400
			P_N < 134 hp and frame size < NEMA 500	134 hp ≤ P_N < 469 hp or NEMA 500 ≤ frame size ≤ NEMA 580
Non-ABB motors				
Random-wound and form-wound	U_N ≤ 420 V	Standard: $\hat{U}_{LL}$ = 1300 V	-	+ N or CMF
	420 V < U_N ≤ 500 V	Standard: $\hat{U}_{LL}$ = 1300 V	+ d*u*/d*t*	+ d*u*/d*t* + (N or CMF)
		or		
		Reinforced: $\hat{U}_{LL}$ = 1600 V, 0.2 microsecond rise time	-	+ N or CMF

The abbreviations used in the table are defined below.

Abbr.	Definition
U_N	Nominal AC line voltage
$\hat{U}_{LL}$	Peak line-to-line voltage at motor terminals which the motor insulation must withstand
P_N	Motor nominal power
d*u*/d*t*	d*u*/d*t* filter at the output of the drive. Available from ABB as an optional add-on kit.
CMF	Common mode filter. Depending on the drive type, CMF is available from ABB as an optional add-on kit.
N	N-end bearing: insulated motor non-drive end bearing
n.a.	Motors of this power range are not available as standard units. Consult the motor manufacturer.

Additional requirements for the braking applications

When the motor brakes the machinery, the intermediate circuit DC voltage of the drive increases, the effect being similar to increasing the motor supply voltage by up to 20 percent. Consider this voltage increase when specifying the motor insulation requirements if the motor will be braking a large part of its operation time.

Example: Motor insulation requirement for a 400 V AC line voltage application must be selected as if the drive were supplied with 480 V.

Additional data for calculating the rise time and the peak line-to-line voltage

If you need to calculate the actual peak voltage and voltage rise time considering the actual cable length, proceed as follows:

- Peak line-to line voltage: Read the relative $\hat{U}_{LL}/U_N$ value from the appropriate diagram below and multiply it by the nominal supply voltage (U_N).
- Voltage rise time: Read the relative values $\hat{U}_{LL}/U_N$ and $(du/dt)/U_N$ from the appropriate diagram on page *87*. Multiply the values by the nominal supply voltage (U_N) and substitute into equation $t = 0.8 \cdot \hat{U}_{LL}/(du/dt)$.

A

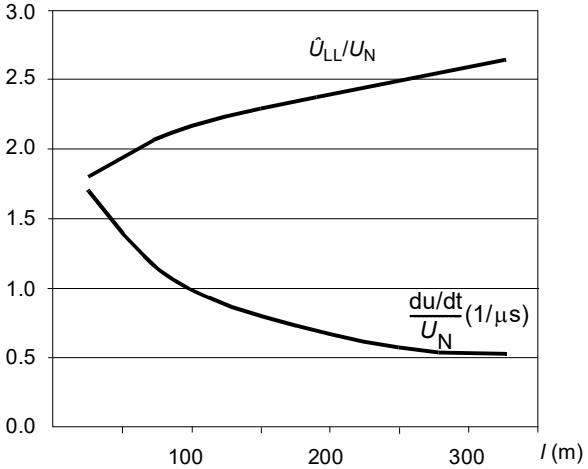

B

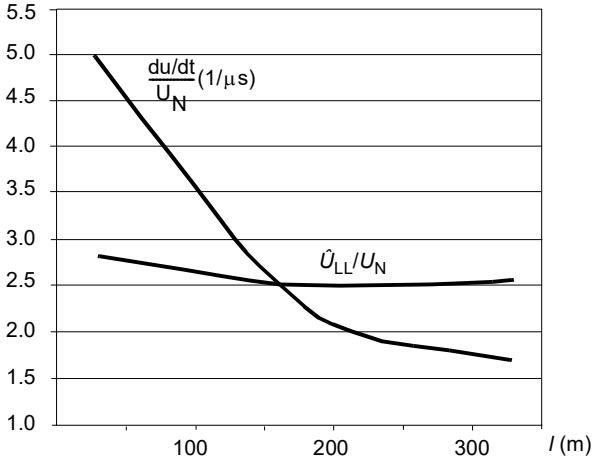

A	Drive with d*u*/d*t* filter
B	Drive without d*u*/d*t* filter
l	Motor cable length
$\hat{U}_{LL}/U_N$	Relative peak line-to-line voltage
$(du/dt)/U_N$	Relative d*u*/d*t* value
Note: ÛLL and d*u*/d*t* values are approximately 20% higher with resistor braking.	

Additional note for sine filters

Sine filters protect the motor insulation system. Therefore, a d*u*/d*t* filter can be replaced with a sine filter. The peak phase-to-phase voltage with the sine filter is approximately $1.5 \cdot U_N$.

Selecting the power cables

General guidelines, IEC and North America

Select the input power and motor cables **according to local regulations**:

- **Current:** Select a cable capable of carrying the drive nominal current. See section *Electrical ratings* (page *244*) for the rated currents.
- **Temperature:** For IEC, select a cable rated for at least 70 °C (90 °C for IP55 [UL Type 12]) maximum permissible temperature of conductor in continuous use. For North America, power cables must be rated for 90 °C (194 °F) or higher with derating.
- **Voltage:** 600 V AC cable is accepted for up to 500 V AC. 1000 V AC cable is required above 500 V AC.
- **Conductivity:** The conductivity of the PE conductor must be sufficient, see the table on page *90*.

To comply with the EMC requirements of the CE mark, use one of the approved cable types in section *Preferred power cable types, IEC and North America* on page *91*.

Symmetrical shielded cable reduces electromagnetic emission of the whole drive system as well as the stress on motor insulation, bearing currents and wear.

Metal conduit reduces electromagnetic emission of the whole drive system.

The protective conductor must always have an adequate conductivity.

Unless local wiring regulations state otherwise, the cross-sectional area of the protective conductor must agree with the conditions that require automatic disconnection of the supply required in 411.3.2. of IEC 60364-4-41:2005 and be capable of withstanding the prospective fault current during the disconnection time of the protective device.

The cross-sectional area of the protective conductor can either be selected from the table below or calculated according to 543.1 of IEC 60364-5-54.

This table shows the minimum cross-sectional area related to the phase conductor size according to IEC 61800-5-1 when the phase conductor and the protective conductor are made of the same metal. If this is not so, the cross-sectional area of the protective earthing conductor shall be determined in a manner which produces a conductance equivalent to that which results from the application of this table.

Cross-sectional area of the phase conductors S (mm^2)	**Minimum cross-sectional area of the corresponding protective conductor S_p (mm^2)**
$S \leq 16$	S
$16 < S \leq 35$	16
$35 < S$	S/2

Note: See the IEC/EN 61800-5-1 requirement on grounding in the Note on page *21*.

Power cable types

Preferred power cable types, IEC and North America

Recommended cable types are presented here. Check with local / state / country electrical codes for allowance.

Cable type	Use as input power cabling	Use as motor cabling
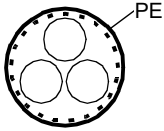 Symmetrical shielded (or armored) cable with three phase conductors and concentric PE conductor as shield (or armor)	Yes	Yes
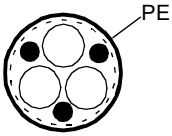 Symmetrical shielded (or armored) cable with three phase conductors and symmetrically constructed PE conductor and a shield (or armor)	Yes	Yes
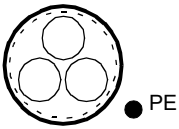 Symmetrical shielded (or armored) cable with three phase conductors and a shield (or armor), and separate PE conductor/cable[1)]	Yes	Yes

[1)] A separate PE conductor is required if the conductivity of the shield (or armor) is not sufficient for the PE use. For IEC 61800-5-1 requirements, see page *90*.

Alternate power cable types

Cable type	Use as input power cabling	Use as motor cabling
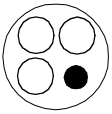 PVC Four-conductor cabling in PVC conduit or jacket (three phase conductors and PE)	Yes with phase conductor smaller than 10 mm^2 (8 AWG).	Yes with phase conductor smaller than 10 mm^2 (8 AWG), or motors up to 30 kW (40 hp). **Note:** Shielded or armored cable, or cabling in metal conduit is always recommended to minimize radio frequency interference
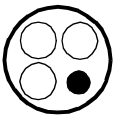 EMT Four-conductor cabling in metal conduit (three phase conductors and PE), eg, EMT, or four-conductor armored cable	Yes	Yes with phase conductor smaller than 10 mm^2 (8 AWG) or motors up to 30 kW (40 hp).
 Well-shielded (Al/Cu shield or armor) four-conductor cable (three phase conductors and a PE)	Yes	Yes with motors up to 100 kW (135 hp). A potential equalization between the frames of motor and driven equipment is required.

Cable type	Use as input power cabling	Use as motor cabling
A single-core cable system: three phase conductors and PE conductor on cable tray 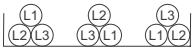 Preferable cable arrangement to avoid voltage or current unbalance between the phases	Yes **WARNING!** If you use unshielded high-power input power cables in an IT network, make sure that the non-conductive outer sheath (jacket) of the cables have good contact with a properly grounded conductive surface, for example, install the cables on a properly grounded cable tray. Otherwise voltage may become present on the non-conductive outer sheath of the cables, and there is even a risk of an electric shock.	No

Not allowed power cable types

Cable type	Use as input power cabling	Use as motor cabling
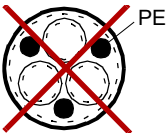 Symmetrical shielded cable with individual shields for each phase conductor	No	No

Additional guidelines, North America

Follow these additional guidelines for North America with the general guidelines in section *General guidelines, IEC and North America* on page *89*.

ABB recommends the use of conduit for power wiring to the drive and between the drive and the motor(s). Due to the variety of application needs, metallic and non-metallic conduit can be used. ABB prefers the use of metallic conduit. Where permitted, non-metallic conduit may be used.

The following tables show examples of various materials and methods for wiring the drive in the intended application. See NEC 70 along with state and local codes for the appropriate materials for your application.

In all applications, ABB prefers the use of VFD cable between drive and motor(s).

Conduit - Metallic[1, 3)]	Notes
Electrical metallic tubing: Type EMT	• Symmetrical shielded VFD cable is preferred. • Use separate conduit run for each motor.[4)] • Do not run power feed wiring and motor wiring in the same conduit.
Rigid metal conduit: Type RMC	
Liquid-tight flexible metal electrical conduit: Type LFMC	

Conduit - Non-metallic[2,3)]	Notes
Liquid-tight flexible nonmetallic conduit: Type LFNC	• Symmetrical shielded VFD cable is preferred. • Use separate conduit run for each motor.[4)] • Do not run power feed wiring and motor wiring in the same conduit.[4)]

Wireways[3)]	Notes
Metallic	• Symmetrical shielded VFD cable is preferred. • Use output conductors require separation from motor feed and other low voltage conductors. • Do not run outputs of multiple drives in parallel. Bundle each cable together and use separator where possible.

Free air[3)]	Notes
Enclosures, air handlers, etc.	• Symmetrical shielded VFD cable is preferred. • Allowed internally in enclosures when in accordance with UL.

1) Metallic conduit may be used as an additional ground path, provided this path is a solid path capable of handling ground currents.

2) Non-metallic conduit use underground is allowed; however, these installations inherently have an increased chance for nuisance problems due to the potential for water/moisture in the conduit. Water/moisture in the conduit increases the likelihood of VFD faults or warnings. Proper installation is required to ensure there is no intrusion of water/moisture.

3) See 70 (NEC), UL, and local codes for your application.

4) See routing instructions in section *General guidelines, North America* on page *103*.

Conductor type, IEC and North America

The following table includes various conductor types that can be connected to the drive. For optimal drive performance, VFD cable is preferred. When not available, see the following standards in the footnotes below.

Conductor type		Notes[1, 2)]
Copper	Allowed	All frames
Aluminum (UL installations)	Not allowed	All frames
Aluminum (IEC installations)	Not allowed	Frames R1…R4
	Allowed	Frames R5…R8 (for U_N = 230 V only)

[1)] The selection of cable sizing/type is based on 70 (NEC) Table 310.15 (B) (16), formerly table 310.16, for copper wires is based on 75 °C (167 °F), and wire insulation at 30 °C (86 °F) ambient temperature. Not more than three current-carrying conductors in raceway or cable or earth (directly buried). For other ambient temperatures addition derating may be required.

See 310.15(B)(2)(a) for the ampacity correction factors where the ambient temperature is other than 30°C (86°F).

See to 310.15(B)(3)(a) for more than three current-carrying conductors.

For other conditions, size the cables according to local safety regulations, appropriate input voltage and the load current of the drive. See also page 297 for the accepted cable sizes of the drive

[2)] Select cable size/type is based on CSA 22.1 latest acceptable revision for your area.

Power cable shield, IEC and North America

If the cable shield is used as the sole PE conductor, make sure that the conductivity agrees with the PE conductor requirements. See section *General guidelines, IEC and North America* on page *89*, or IEC 61800-5-1.

To effectively suppress radiated and conducted radio-frequency emissions, the cable shield conductivity must be at least 1/10 of the phase conductor conductivity. The requirements are easily met with a copper or aluminum shield. The minimum requirement of the motor cable shield of the drive is shown below. It consists of a concentric layer of copper wires with an open helix of copper tape or copper wire. The better and tighter the shield, the lower the emission level and bearing currents.

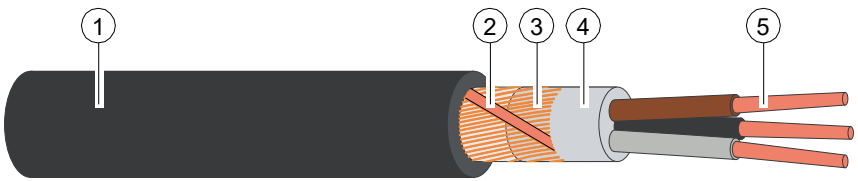

1	Insulation jacket

2	Helix of copper tape or copper wire
3	Copper wire screen
4	Inner insulation
5	Cable core

Typical power cable sizes, IEC

The table below gives copper cable types with concentric copper shield for the drives with nominal current. The value separated by the plus sign means the diameter of the PE conductor.

See page *280* for the cable lead-through sizes allowed for the selected drive frame size.

IEC type ACH580-01-	Frame size	Cu cable type[1)]	Al cable type[1,2)]
		mm²	mm²
3-phase U_N = 230 V			
04A7-2	R1	3×1.5 + 1.5	-
06A7-2	R1	3×1.5 + 1.5	-
07A6-2	R1	3×1.5 + 1.5	-
12A0-2	R1	3×1.5 + 1.5	-
018A-2	R1	3×2.5 + 2.5	-
025A-2	R2	3×4.0 + 4.0	-
032A-2	R2	3×6.0 + 6.0	-
047A-2	R3	3×10 + 10	-
060A-2	R3	3×10 + 10	-
089A-2	R5	3×35 + 16	3×50 + 25
115A-2	R5	3×50 + 25	3×70 + 35
144A-2	R6	3×70 + 35	3×120 + 70
171A-2	R7	3×95 + 50	3×150 + 70
213A-2	R7	3×120 + 70	3×240 + 120
276A-2	R8	2×(3×70 + 35)	2×(3×95 + 50)
3-phase U_N = 400 V			
02A7-4	R1	3×1.5 + 1.5	-
03A4-4	R1	3×1.5 + 1.5	-
04A1-4	R1	3×1.5 + 1.5	-
05A7-4	R1	3×1.5 + 1.5	-
07A3-4	R1	3×1.5 + 1.5	-
09A5-4	R1	3×2.5 + 2.5	-
12A7-4	R1	3×2.5 + 2.5	-
018A-4	R2	3×2.5 + 2.5	-
026A-4	R2	3×6 + 6	-
033A-4	R3	3×10 + 10	-
039A-4	R3	3×10 + 10	-
046A-4	R3	3×10 + 10	-
062A-4	R4	3×25 + 16	-
073A-4	R4	3×35 + 16	-
-	R4	-	-
088A-4	R5	3×50 + 25	-
106A-4	R5	3×70 + 35	-
145A-4	R6	3×95 + 50	-
169A-4	R7	3×120 + 70	-
206A-4	R7	3×150 + 70	-
246A-4	R8	2×(3×70+35)	-

IEC type ACH580-01-	Frame size	Cu cable type[1)]	Al cable type[1,2)]
		mm²	mm²
293A-4	R8	2×(3×95+50)	-
-	R9	-	-
363A-4	R9	2×(3×120+70)	-
430A-4	R9	2×(3×150+70)	-

3AXD00000586715.xls L

1) The cable sizing is based on max. 6 cables laid on a cable ladder side by side, ambient temperature 30 °C, PVC insulation, surface temperature 70 °C (EN 60204-1 and IEC 60364-5-52/2001). For other conditions, size the cables according to local safety regulations, appropriate input voltage and the load current of the drive. See also page *280* for the accepted cable sizes of the drive.

2) Aluminum cables can be used with U_N = 230 V frames R1…R4, only.

See also section *Terminal and lead-through data for the power cables* on page *280*.

Typical power cable sizes, UL/NEC

See page *282* for the cable lead-through sizes allowed for the selected drive frame size.

The selection of cable sizing/type is based on 70 (NEC) Table 310.15 (B) (16), formerly table 310.16, for copper wires is based on 75 °C (167 °F), and wire insulation at 30 °C (86 °F) ambient temperature. Not more than three current-carrying conductors in raceway or cable or earth (directly buried). For other ambient temperatures addition derating may be required.

See 310.15(B)(2)(a) for the ampacity correction factors where the ambient temperature is other than 30°C (86°F).

See 310.15(B)(3)(a) for more than three current-carrying conductors.

For other conditions, size the cables according to local safety regulations, appropriate input voltage and the load current of the drive. See also page *282* for the accepted cable sizes of the drive

Note: In UL installations, aluminum cables are not allowed.

Armored cable / shielded power cable, IEC and North America

Six-conductor (three phases and three ground) type MC continuous corrugated armor cable with symmetrical grounds is available from the following suppliers (trade names in parentheses):

- Anixter Wire & Cable (Philsheath)
- BICC General Corp (Philsheath)
- Rockbestos Co. (Gardex)
- Oaknite (CLX).

Shielded power cables are available from the following suppliers:

- Belden
- LAPPKABEL (ÖLFLEX)
- Pirelli.

Selecting the control cables, IEC and North America

Shielding

All control cables must be shielded.

Use a double-shielded twisted pair cable (figure a below) for analog signals. Employ one individually shielded pair for each signal. Do not use common return for different analog signals.

A double-shielded cable is the best alternative for low-voltage digital signals but single-shielded (b) twisted pair cable is also acceptable.

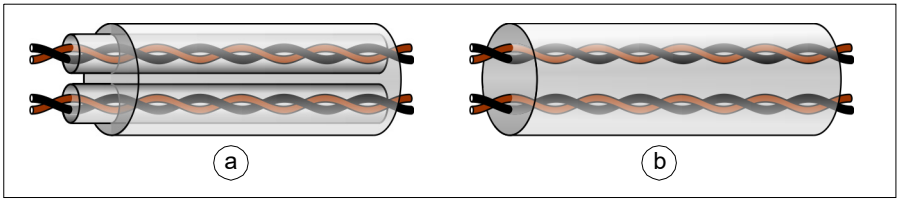

Signals in separate cables

Run analog and digital signals in separate, shielded cables.

Do not mix 24 V AC/DC and 115/230 V AC signals in the same cable.

Signals allowed to be run in the same cable

Relay-controlled signals, providing their voltage does not exceed 48 V, can be run in the same cables as digital input signals. The relay-controlled signals should be run as twisted pairs.

Relay cable

The cable type with braided metallic screen (for example ÖLFLEX by LAPPKABEL, Germany) has been tested and approved by the manufacturer.

Control panel cable

In remote use, the cable connecting the control panel to the drive must not exceed 100 m (330 ft). If multiple drives are connected, the total length of the panel bus must not exceed 100 m (330 ft).

The cable type tested and approved by the manufacturer is used in control panel option kits. Suitable cables are CAT 5e unshielded or shielded twisted pair cables.

Drive composer PC tool cable

Connect the Drive composer PC tool to the drive through the USB port of the control panel. Use a USB type A (PC) - type B (control panel) cable. The maximum length of the cable is 3 m (9.8 ft).

FPBA-01 PROFIBUS DP adapter module connectors

Frames R1…R3: The following connector types have been tested to fit in the tight space for option slot 1.

- Phoenix Contact SUBCON-PLUS-PROFIB/PG/SC2, part number 2708245. Lead the cable through the control cable hole on the right in the lead-through plate (1).
- Siemens, part number 6GK1 500 0EA02. Lead the cable through the middle control cable hole in the lead-through plate (2).

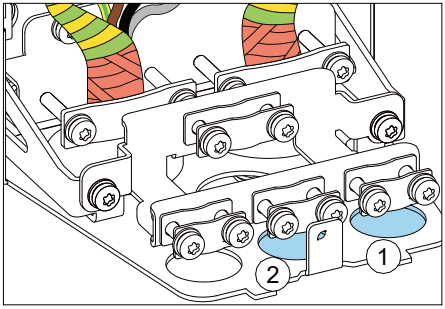

Routing the cables

General guidelines, IEC

Route the motor cable away from other cable routes. Motor cables of several drives can be run in parallel installed next to each other. The motor cable, input power cable and control cables should be installed on separate trays. Avoid long parallel runs of motor cables with other cables in order to decrease electromagnetic interference caused by the rapid changes in the drive output voltage.

Where control cables must cross power cables, make sure they are arranged at an angle as near to 90 degrees as possible. Do not run extra cables through the drive.

The cable trays must have good electrical bonding to each other and to the grounding electrodes. Aluminum tray systems can be used to improve local equalizing of potential.

A diagram of the cable routing is shown below.

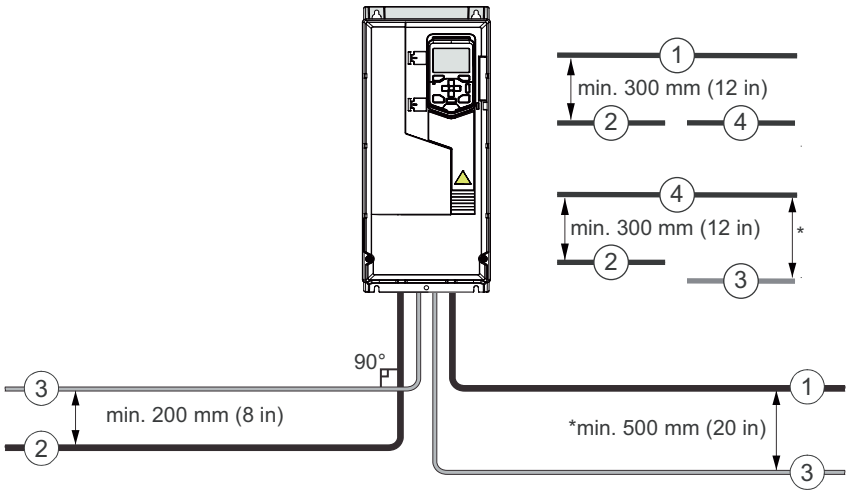

1	Motor cable. When the motor cable is symmetrical and shielded, distances between the motor cable and other cables can be reduced by half.
2	Input power cable
3	Control cable
4	Brake resistor/chopper cable

General guidelines, North America

The following illustrates general guidelines for routing power and motor cabling in conduit. Ensure the installation of your application is in accordance with national and local codes

- Do not run input power cable and motor cable in the same conduit.
- Use separate conduit for each motor cable run.

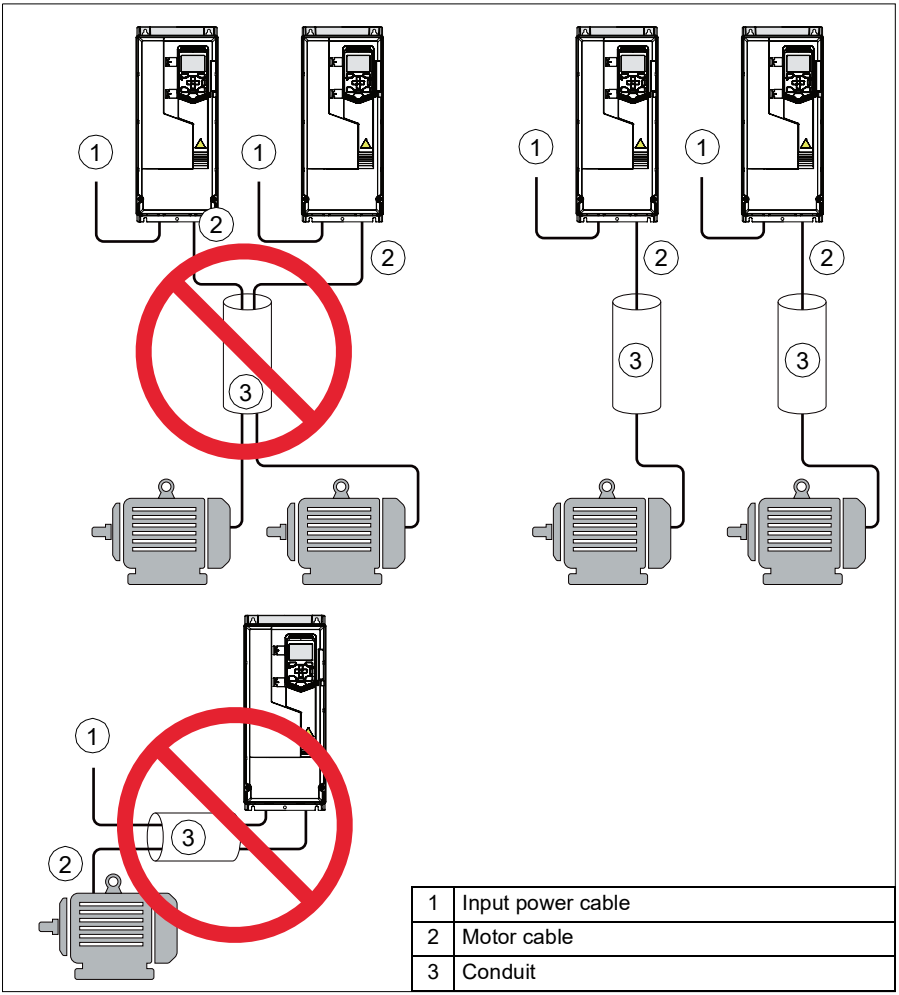

1	Input power cable
2	Motor cable
3	Conduit

Continuous motor cable shield or enclosure for equipment on the motor cable

To minimize the emission level when safety switches, contactors, connection boxes or similar equipment are installed on the motor cable between the drive and the motor:

- European Union: Install the equipment in a metal enclosure with 360 degree grounding for the shields of both the incoming and outgoing cable, or connect the shields of the cables otherwise together.
- North America: Install the equipment in a way that the conduit or motor cable shielding runs continuously without breaks from the drive to the motor and is earthed at only the drive and motors ends.

Separate control cable ducts, IEC and North America

Wire 24 V and 230 V (120 V) control cables in separate ducts unless the 24 V cable is insulated for 230 V (120 V) or insulated with an insulation sleeving for 230 V (120 V).

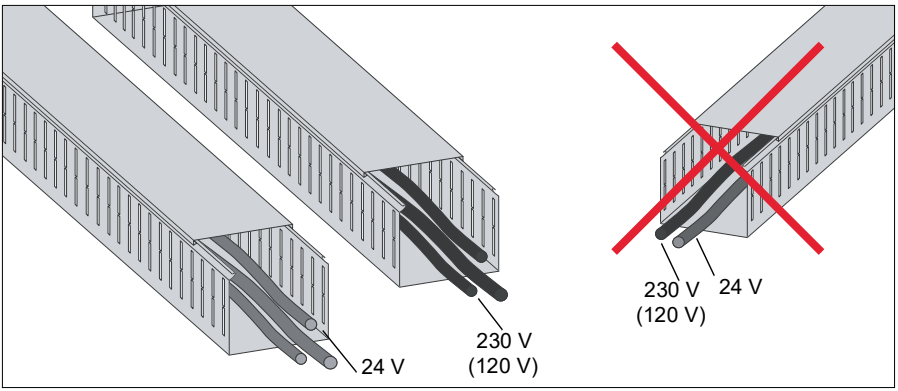

Implementing short-circuit and thermal overload protection

Protecting the drive and input power cable in short-circuits

Protect the drive and input cable with fuses as follows:

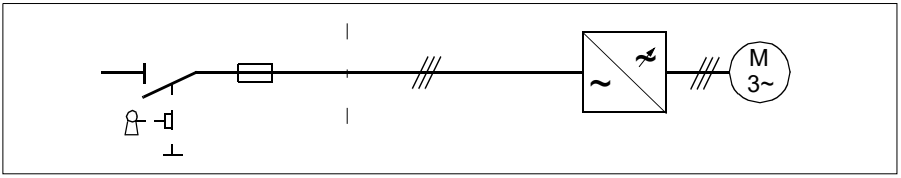

Size the fuses at the distribution board according to instructions given in chapter *Technical data*, page *262*. The fuses will protect the input cable in short-circuit situations, restrict drive damage and prevent damage to adjoining equipment in case of a short-circuit inside the drive.

Circuit breakers, IEC

The protective characteristics of circuit breakers depend on the type, construction and settings of the breakers. There are also limitations pertaining to the short-circuit capacity of the supply network. Your local ABB representative can help you in selecting the breaker type when the supply network characteristics are known.

WARNING! Due to the inherent operating principle and construction of circuit breakers, independent of the manufacturer, hot ionized gases can escape from the breaker enclosure in case of a short-circuit. To ensure safe use, pay special attention to the installation and placement of the breakers. Obey the manufacturer's instructions.

You can use the circuit breakers listed in chapter *Circuit breakers (IEC)*, page *266*. Other circuit breakers can be used with drive if they provide the same electrical characteristics. ABB does not assume any liability whatsoever for the correct function and protection with circuit breakers not listed below. Furthermore, if the recommendations given by ABB are not obeyed, the drive can experience problems that warranty does not cover.

Protecting the motor and motor cable in short-circuits

The drive protects the motor cable and a single motor in a short-circuit situation when the motor cable is sized according to the nominal current of the drive. No additional protection devices are needed.

Protecting the drive and the input power and motor cables against thermal overload

The drive protects itself and the input and motor cables against thermal overload when the cables are sized according to the nominal current of the drive. No additional thermal protection devices are needed.

WARNING! If the drive is connected to multiple motors, use a separate motor thermal overload device for protecting each motor cable and motor against overload. The drive overload protection is for the sum of the total motor load. It may not trip due to an overload in one motor.

Protecting the motor against thermal overload

According to regulations, the motor must be protected against thermal overload and the current must be switched off when overload is detected. The drive includes a motor thermal protection function that protects the motor and switches off the current when necessary. Depending on a drive parameter value, the function either monitors a calculated temperature value (based on a motor thermal model, which in turn is based on the motor nominal current) or an actual temperature indication given by motor temperature sensors. The user can tune the thermal model further by feeding in additional motor and load data.

The most common temperature sensors are:

- motor sizes IEC180…225: thermal switch, eg, Klixon
- motor sizes IEC200…250 and larger: PTC or Pt100.

For more information, see *ACH580 HVAC control program firmware manual* (3AXD50000027537 [English]).

Protecting the drive against ground faults

The drive is equipped with an internal ground fault protective function to protect the unit against ground faults in the motor and motor cable. This is not a personnel safety or a fire protection feature. The ground fault protective function can be changed with a parameter 31.20 Earth fault.

Residual current device compatibility

The drive is suitable to be used with residual current devices of Type B.

Note: The EMC filter of the drive includes capacitors connected between the main circuit and the frame. These capacitors and long motor cables increase the ground leakage current and may cause nuisance faults in circuit breakers.

Implementing the Emergency stop function

For safety reasons, install the emergency stop devices at each operator control station and at other operating stations where emergency stop may be needed. Design the emergency stop according to relevant standards.

Note: Pressing the Off key on the control panel of the drive does not generate an emergency stop of the motor or separate the drive from dangerous potential.

Implementing the Safe torque off function

See chapter *Safe torque off function* on page *345*.

Implementing the ATEX-certified Safe motor disconnection function (option +Q971)

Note: Option +Q971 is not available for North America.

With option +Q971, the drive supplies ATEX-certified safe motor disconnection without contactor that uses the drive Safe torque off function. For more information, see *CPTC-02 ATEX-certified thermistor protection module, Ex II (2) GD (+L537+Q971) user's manual* (3AXD50000030058 [English]).

Using a safety switch between the drive and the motor

It is recommended to install a safety switch between the permanent magnet motor and the drive output. This is needed to isolate the motor from the drive during maintenance work on the drive.

Using a contactor between the drive and the motor

Implementing the control of the output contactor depends on the motor control mode and stopping method selected.

When you have selected

- Vector control mode and motor ramp stop, use the following operational sequence to open the contactor.

1. Give a stop command to the drive.
2. Wait until the drive decelerates the motor to zero speed.
3. Open the contactor.

When you have selected

- Vector control mode and motor coast stop; or scalar control mode, use the following operational sequence to open the contactor.

1. Give a stop command to the drive.
2. Open the contactor.

WARNING! When the Vector control mode is in use, never open the output contactor while the drive controls the motor. The vector control operate extremely fast, much faster than it takes for the contactor to open its contacts. When the contactor starts opening while the drive controls the motor, the vector control will try to maintain the load current by immediately increasing the drive output voltage to the maximum. This will damage or destroy the contactor completely.

Implementing the undervoltage control (power-loss ride-through)

See *ACH580 HVAC control program firmware manual* (3AXD50000027537 [English]).

Protecting the contacts of relay outputs

Inductive loads (relays, contactors, motors) cause voltage transients when switched off.

It is highly recommended that inductive loads are equipped with noise attenuating circuits (varistors, RC filters [AC] or diodes [DC]) in order to minimize the EMC emission at switch-off. If not suppressed, the disturbances may connect capacitively or inductively to other conductors in the control cable and form a risk of malfunction in other parts of the system.

Install the protective component as close to the inductive load as possible. Do not install protective components at the relay outputs.

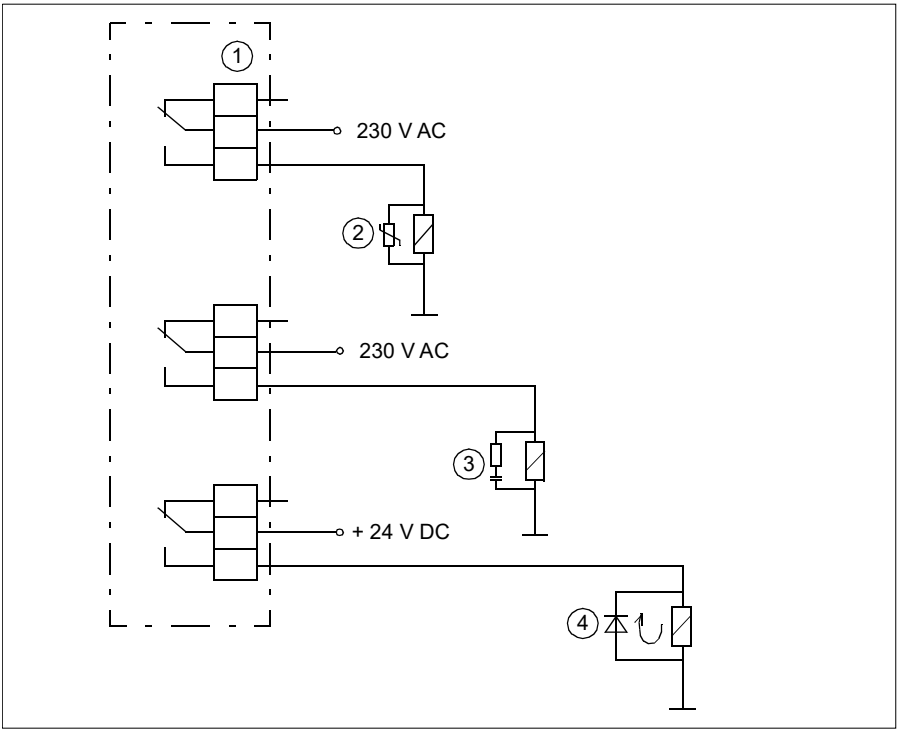

1	Relay outputs
2	Varistor
3	RC filter
4	Diode

Limiting relay output maximum voltages at high installation altitudes

See sections *Isolation areas, R1…R5* on page *292* and *Isolation areas, R6…R9* on page *293*.

Implementing a motor temperature sensor connection

WARNING! IEC 60664 requires double or reinforced insulation between live parts and the surface of accessible parts of electrical equipment which are either non-conductive or conductive but not connected to the protective earth..

To connect a motor temperature sensor and other similar components to the drive, you have four alternatives:

1. If there is double or reinforced insulation between the sensor and the live parts of the motor, you can connect the sensor directly to the inputs of the drive.
2. If there is basic insulation between the sensor and the live parts of the motor, you can connect the sensor to the inputs of the drive if all circuits connected to the drive's digital and analog inputs (typically extra-low voltage circuits) are protected against contact and insulated with basic insulation from other low-voltage circuits. The insulation must be rated for the same voltage level as the drive main circuit. Note that extra-low voltage circuits (such as 24 V DC) typically do not meet these requirements.
3. You can connect the sensor to an extension module with reinforced insulation (eg, CMOD-02) between the sensor connector and the other connectors of the module. See the table below for the sensor insulation requirement. For sensor connection to the extension module, see its manual.
4. You can connect a sensor to an external thermistor relay the insulation of which is rated for the main circuit voltage of the drive.

See:

- section *AI1 and AI2 as Pt100, Pt1000, Ni1000, KTY83 and KTY84 sensor inputs (X1)* on page *152* (IEC) or *AI1 and AI2 as Pt100, Pt1000, Ni1000, KTY83 and KTY84 sensor inputs (X1)* on page *206* (North America)
- section *CMOD-02 multifunction extension module (external 24 V AC/DC and isolated PTC interface)* on page *379*
- *CPTC-02 ATEX-certified thermistor protection module, Ex II (2) GD (+L537+Q971) user's manual* (3AXD50000030058 [English]).

The table shows what temperature sensor types you can connect to the drive I/O extension modules as well as the insulation requirement for the sensor.

Extension module		Temperature sensor type		
Type	**Insulation**	**PTC**	**KTY**	**Pt100, Pt1000**
CMOD-02	Reinforced insulation between the motor thermistor connector and the other connectors of the module (including drive control unit connector). –> No special requirements for the thermistor insulation level. (The drive control board is PELV compatible also when the module and a thermistor protection circuit are installed.)	X	-	-
CPTC-02		X	-	-

6

Electrical installation – IEC

Contents of this chapter

This chapter describes how to check the insulation of the assembly and the compatibility with other than symmetrically grounded TN-S systems. It then shows how to connect the power and control cables, install optional modules and connect a PC.

Warnings

WARNING! Obey the instructions in chapter *Safety instructions* on page *15*. If you ignore them, injury or death, or damage to the equipment can occur.

Make sure that the drive is disconnected from the input power during installation. If the drive is already connected to the input power, wait for 5 minutes after disconnecting the input power.

IEC

Required tools

To do the electrical installation, you need the these tools:

- wire stripper
- screwdriver set (Torx, flat and/or Phillips, as appropriate)
- torque wrench.

Checking the insulation of the assembly

Drive

Do not make any voltage tolerance or insulation resistance tests on any part of the drive as testing can damage the drive. Every drive has been tested for insulation between the main circuit and the chassis at the factory. Also, there are voltage-limiting circuits inside the drive which cut down the testing voltage automatically.

Input power cable

Check the insulation of the input power cable according to local regulations before connecting it to the drive.

Motor and motor cable

Check the insulation of the motor and motor cable as follows:

1. Check that the motor cable is disconnected from the drive output terminals T1/U, T2/V and T3/W.
2. Measure the insulation resistance between the phase conductors and between each phase conductor and the Protective Earth conductor. Use a measuring voltage of 1000 V DC. The insulation resistance of a motor must be greater than 100 Mohm (reference value at 25 °C). For the insulation resistance of other motors, please consult the manufacturer's instructions.

   Note: Moisture inside the motor casing will reduce the insulation resistance. If moisture is suspected, dry the motor and repeat the measurement.

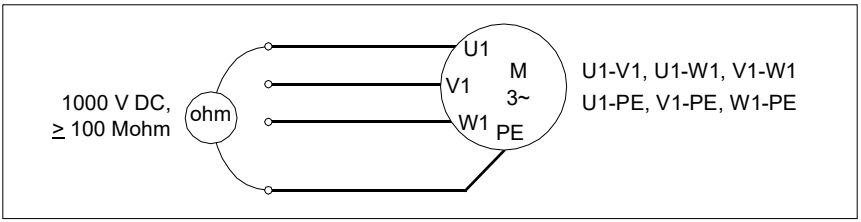

IEC

Brake resistor assembly for R1…R3

Check the insulation of the brake resistor assembly (if present) as follows:

1. Check that the resistor cable is connected to the resistor, and disconnected from the drive output terminals R+ and R-.
2. At the drive end, connect the R+ and R- conductors of the resistor cable together. Measure the insulation resistance between the combined conductors and the PE conductor by using a measuring voltage of 1000 V DC. The insulation resistance must be greater than 1 Mohm.

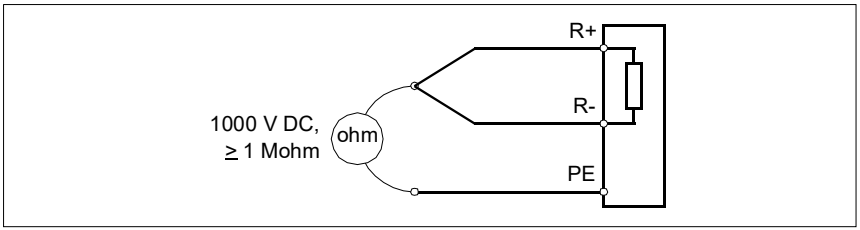

IEC

Checking the compatibility with IT (ungrounded), corner-grounded delta, midpoint-grounded delta and TT systems

EMC filter

A drive with the internal EMC filter connected can be installed to a symmetrically grounded TN-S system. If you install the drive to another system, you may need to disconnect the EMC filter. See sections *When to disconnect EMC filter or ground-to-phase varistor: TN-S, IT, corner-grounded delta and midpoint-grounded delta systems* on page *117*, and *Guidelines for installing the drive to a TT system* on page *118*.

WARNING! Do not install a drive with the EMC filter connected to a system that the filter is not suitable for. This can cause danger, or damage the drive.

Note: When the internal EMC filter is disconnected, the EMC compatibility of the drive is considerably reduced. See section *EMC compatibility and motor cable length* on page *288*.

Ground-to-phase varistor

A drive with the ground-to-phase varistor connected can be installed to a symmetrically grounded TN-S system. If you install the drive to another system, you may need to disconnect the varistor. See sections *When to disconnect EMC filter or ground-to-phase varistor: TN-S, IT, corner-grounded delta and midpoint-grounded delta systems* on page *117*, and *Guidelines for installing the drive to a TT system* on page *118*.

IEC

WARNING! Do not install a drive with the ground-to-phase varistor connected to a system that the varistor is not suitable for. If you do, the varistor circuit can be damaged.

When to disconnect EMC filter or ground-to-phase varistor: TN-S, IT, corner-grounded delta and midpoint-grounded delta systems

Frame	Symmetrically grounded TN-S systems, ie. center-grounded-wye (A)	Corner grounded delta (B1) and midpoint-grounded delta (B2) systems	IT systems (ungrounded or high-resistance grounded ohms]) (C)
R1…R3	Do not disconnect EMC or VAR screws.	Disconnect EMC screw. Do not disconnect VAR screw.	Disconnect EMC and VAR screws.
R4…R5	Do not disconnect EMC or VAR screws.	See Note 1 below.	Disconnect EMC screws (2 pcs) and VAR screw.
R6…R9	Do not disconnect EMC or VAR screws.	Do not disconnect EMC AC or VAR screws. Disconnect EMC DC screw.	Disconnect EMC screws (2 pcs) and VAR screw.

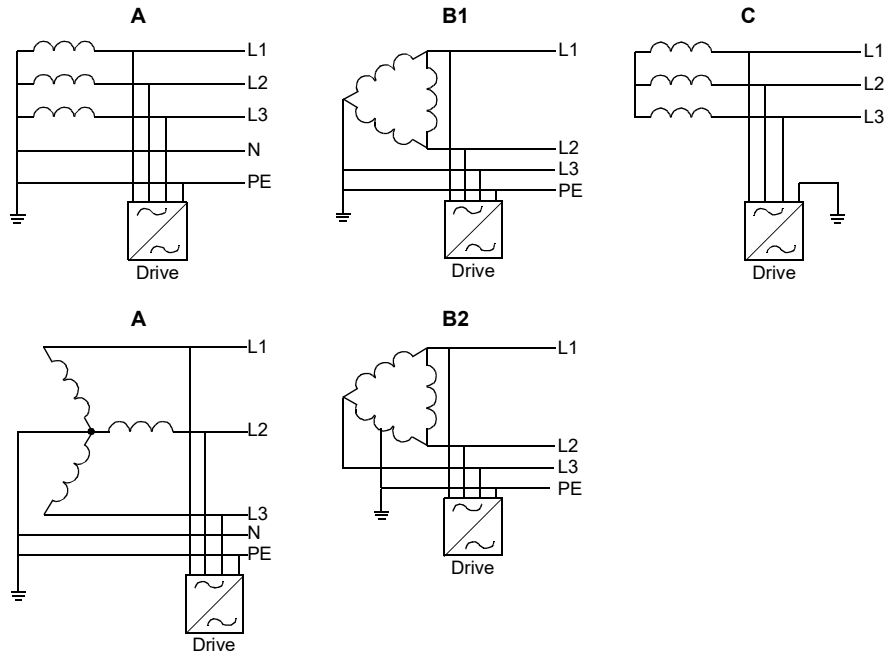

Note 1: Frames R4 and R5 are not evaluated for use on corner-grounded or midpoint-grounded delta systems by IEC standards.

IEC

Note 2: These are the EMC filter and varistor screws in different drive frame sizes.

Frame	EMC filter screws	Ground-to-phase varistor screw
R1…R3	EMC screw	VAR
R4…R5	Two EMC screws	VAR
R6…R9	Two EMC screws	VAR

Guidelines for installing the drive to a TT system

The drive can be installed to a TT system under these conditions:

1. Residual current device has been installed in the supply system.
2. These screws have been disconnected. Otherwise EMC filter and ground-to-phase varistor capacitor leakage current will cause the residual current device to trip.

Frame size	EMC filter screws	Ground-to-phase varistor screw
R1…R3	EMC screw	VAR
R4…R5	Two EMC screws	VAR
R6…R9	Two EMC screws	VAR

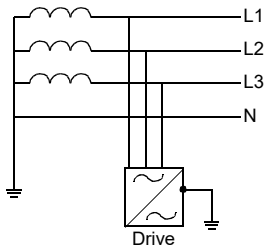

3AXD10000681917

Note:

- Because the EMC filter screws have been disconnected, ABB does not guarantee the EMC category.
- ABB does not guarantee the functioning of the ground leakage detector built inside the drive.
- In large systems the residual current device can trip without a real reason.

Identifying different types of electrical power systems

To identify the electrical power system type, find out the supply transformer connection. If that is not possible, measure these voltages at the distribution board before you connect power to the drive:

1. input voltage line to line (U_{L-L})
2. input voltage line 1 to ground (U_{L1-G})
3. input voltage line 2 to ground (U_{L2-G})
4. input voltage line 3 to ground (U_{L3-G}).

The line-to-ground voltages in relation to the line-to-line voltage of the electrical power system types are shown below.

U_{L-L}	U_{L1-G}	U_{L2-G}	U_{L3-G}	**Electrical power system type**
X	0.58·X	0.58·X	0.58·X	Symmetrically grounded TN system (TN-S system)
X	1.0·X	1.0·X	0	Corner-grounded delta system (non-symmetrical)
X	0.866·X	0.5·X	0.5·X	Midpoint-grounded delta system (non-symmetrical)
X	Varying level versus time	Varying level versus time	Varying level versus time	IT systems (ungrounded or high-resistance-grounded [>30 ohms]) non-symmetrical
X				TT system (the protective earth connection for the consumer is provided by a local earth electrode, and there is another independently installed at the generator.

Frames R1…R3

To disconnect the internal EMC filter or ground-to-phase varistor, if needed, do as follows:

1. Switch off the power from the drive.
2. Open the front cover, if not already opened, see page *124*.
3. To disconnect the internal EMC filter, remove the EMC screw (3a) and place it in the storage place (3b).
4. To disconnect the ground-to-phase varistor, remove the varistor screw (4a) and place it in the storage place (4b).

R1

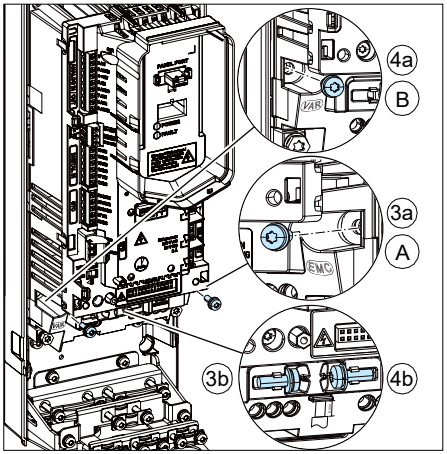

R2

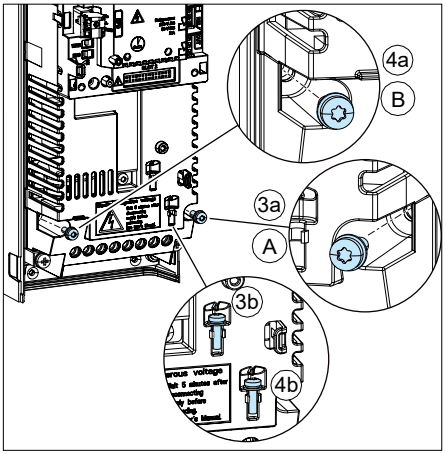

IEC

R3

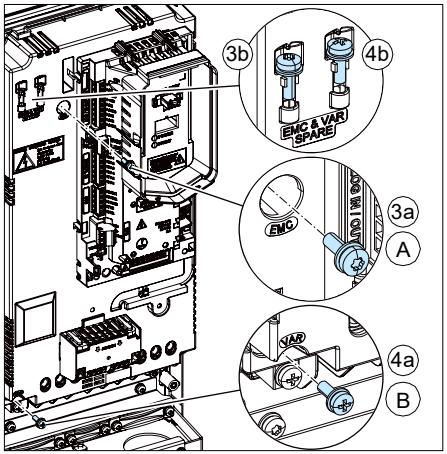

	Screw
A	EMC (DC)
B	VAR

Frames R4…R9

To disconnect the internal EMC filter or ground-to-phase varistor, if needed, do as follows:

1. Switch off the power from the drive.
2. Open the cover, if not already opened. Frame R4: see page *124*, frame R5: see page *131*, frames R6…R9: see page *79*.
3. To disconnect the internal EMC filter, remove the two EMC screws.
4. To disconnect the ground-to-phase varistor, remove the varistor screw.

R4

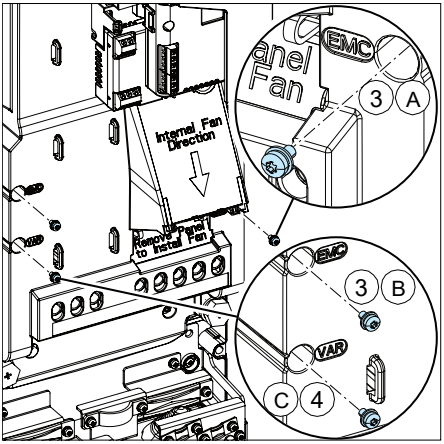

R5

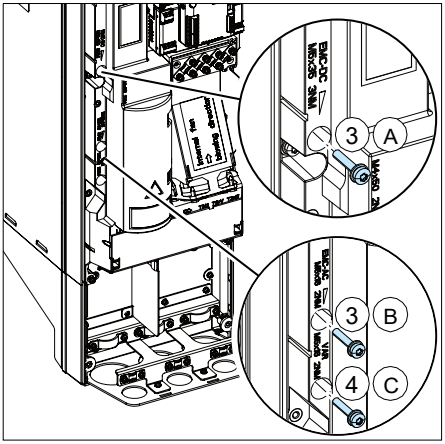

	Screw
A	EMC (DC)
B	EMC (AC)
C	VAR

IEC

R6…R9

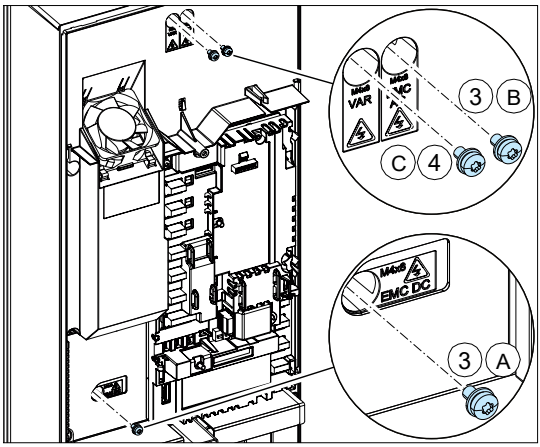

	Screw
A	EMC (DC)
B	EMC (AC)
C	VAR

IEC

Connecting the power cables

Connection diagram

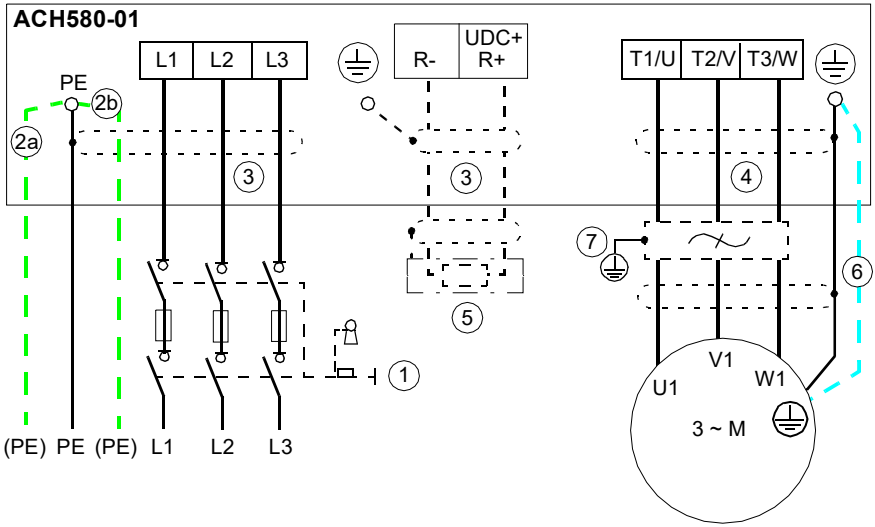

1	For alternatives, see section *Selecting the supply disconnecting device* on page *81*.
2	Use a separate grounding PE cable (2a) or a cable with a separate PE conductor (2b) if the conductivity of the shield does not meet the requirements for the PE conductor (see page *89*).
3	360-degree grounding is recommended if shielded cable is used. Ground the other end of the input cable shield or PE conductor at the distribution board.
4	360-degree grounding is required.
5	External brake resistor.
6	Use a separate grounding cable if the shield does not meet the requirements of IEC 61439-1 (see page *89*) or there is no symmetrically constructed grounding conductor in the cable (see page *93*).
7	d*u*/d*t* or common mode filter (optional), see page *389*.

Note:

If there is a symmetrically constructed grounding conductor on the motor cable in addition to the conductive shield, connect the grounding conductor to the grounding terminal at the drive and motor ends.

Do not use an asymmetrically constructed motor cable for motors above 30 kW (see page *89*). Connecting its fourth conductor at the motor end increases bearing currents and causes extra wear.

IEC

Connection procedure, frames R1…R4

1. Remove the front cover: Loosen the retaining screw with a T20 Torx screwdriver (1a) and lift the cover from the bottom outwards (1b) and then up (1c).

IP21 (UL Type 1), R1…R2

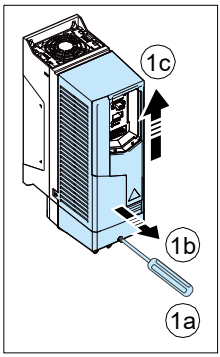

IP21 (UL Type 12), R3…R4

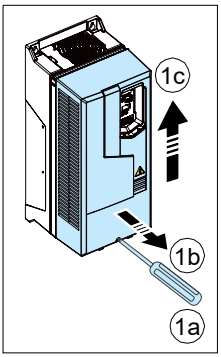

IP55 (UL Type 12), R1…R3

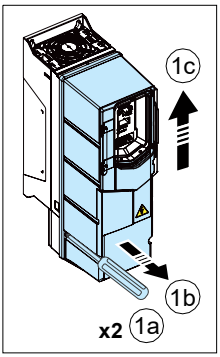

IP55 (UL Type 12), R4

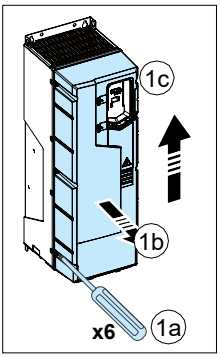

WARNING! If you install the drive on any other system than symmetrically grounded TN-S system, see section *Checking the compatibility with IT (ungrounded), corner-grounded delta, midpoint-grounded delta and TT systems* on page *116* if you have to disconnect the EMC filter and ground-to-phase varistor.

2. Attach the residual voltage warning sticker in the local language.

R1

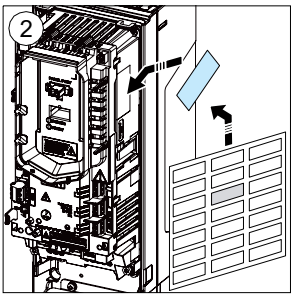

R2

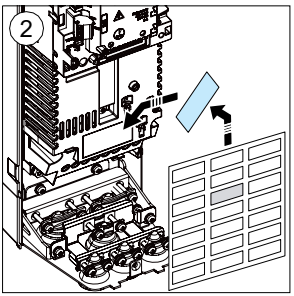

R3…R4

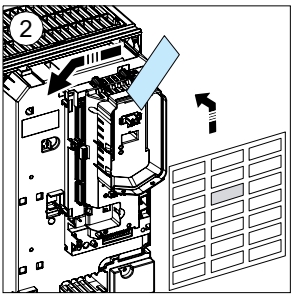

IEC

3. Remove the rubber grommets for the motor and input power cables, as well as brake resistor cable, if used. Remove the grommets for the control cables when you are connecting them.

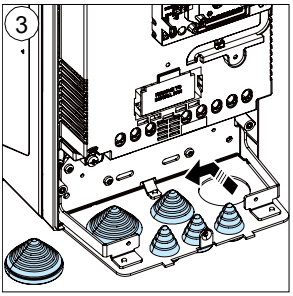

IEC

Motor cable

4. Cut an adequate hole into the rubber grommet. Slide the grommet onto the cable.
5. Prepare the ends of the cable as illustrated in the figures. In frames R1 and R2 there are markings on the drive frame near the power cable terminals helping you to strip the wires to the correct length of 8 mm.

   Two different motor cable types are shown (6a, 6b). **Note:** The bare shield will be grounded 360 degrees. Mark the pigtail made from the shield as a PE conductor with yellow-and-green color.

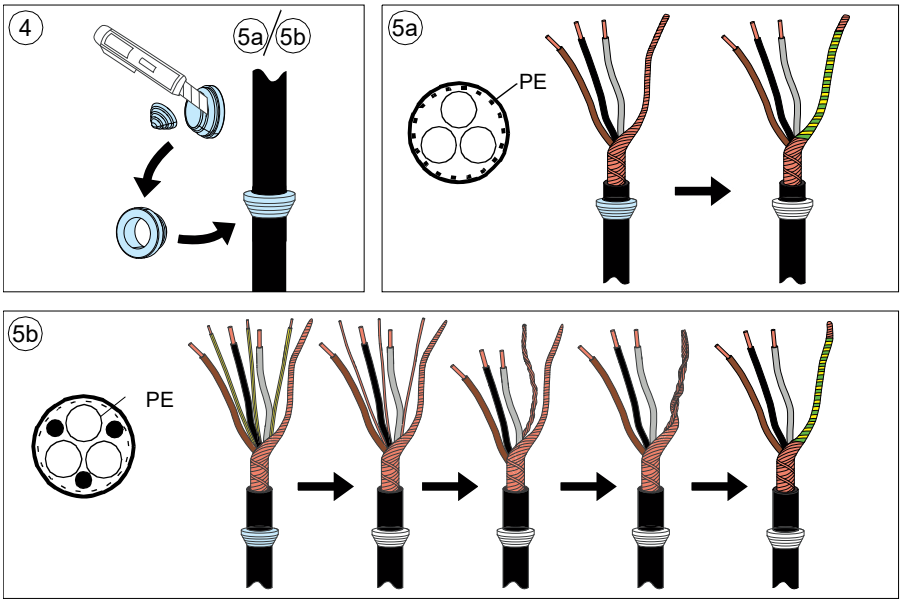

IEC

6. Slide the cable through the hole in the cable entry and attach the grommet to the hole.

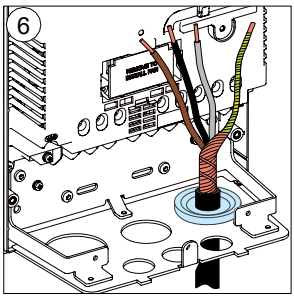

7. Connect the motor cable:
   - Ground the shield 360 degrees by tightening the clamp of the power cable grounding shelf onto the stripped part of the cable. (7a)
   - Connect the twisted shield of the cable to the grounding terminal. (7b)
   - Connect the phase conductors of the cable to the T1/U, T2/V and T3/W terminals. Tighten the screws to the torque given in the table. (7c).

R1…R2

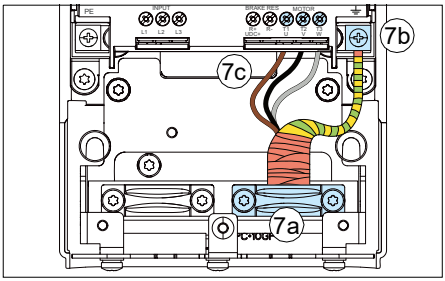

R3

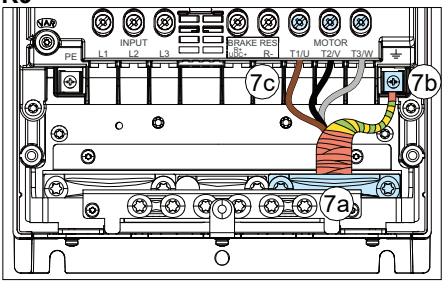

R4

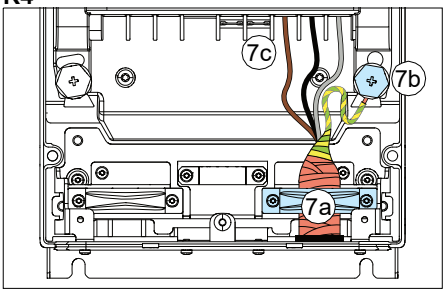

Frame size	R1		R2	
	N·m	lbf·ft	N·m	lbf·ft
T1/U, T2/V, T3/W	1.0	0.7	1.5	1.1
PE, ⏚	1.5	1.1	1.5	1.1
	1.2	0.9	1.2	0.9

Frame size	R3		R4	
	N·m	lbf·ft	N·m	lbf·ft
T1/U, T2/V, T3/W	3.5	2.6	4.0	3.0
PE, ⏚	1.5	1.1	2.9	2.1
	1.2	0.9	1.2	0.9

IEC

Input power cable

8. Cut an adequate hole into the rubber grommet. Slide the grommet onto the cable. Frame R1: Make sure there is no optional I/O extension module installed in options slot 2 at this point.

9. Prepare the ends of the cable as illustrated in the figure. If you use aluminum cables, put grease to the peeled aluminum cable before connecting it to the drive. **Note:** The bare shield will be grounded 360 degrees. Mark the pigtail made from the shield as a PE conductor with yellow-and-green color.

10. Slide the cable through the hole in the cable entry and attach the grommet to the hole.

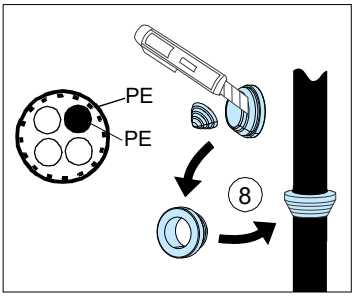

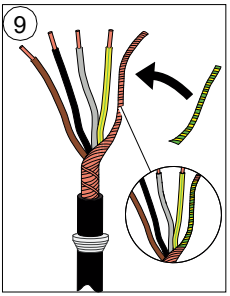

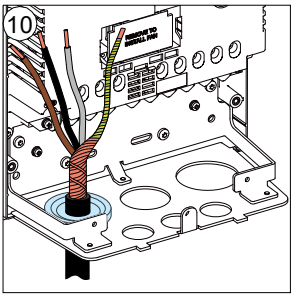

11. Connect the input power cable:
    - Ground the shield 360 degrees by tightening the clamp of the power cable grounding shelf onto the stripped part of the cable. (11a)
    - Connect the twisted shield of the cable to the grounding terminal. (11b)
    - Connect the additional PE conductor (see the note on page *20* in chapter *Safety instructions*) of the cable (11c). *20*
    - Connect the phase conductors of the cable to the L1, L2 and L3 terminals. Tighten the screws to the torque given in the table. (11d).

R1…R2

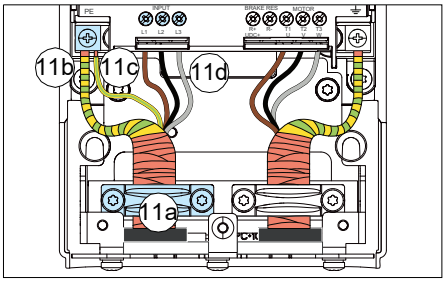

R3

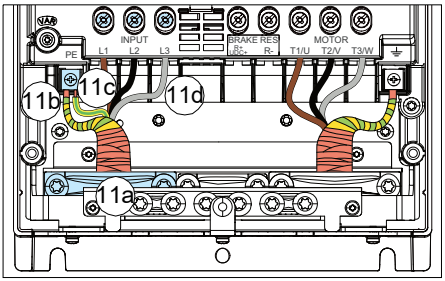

R4

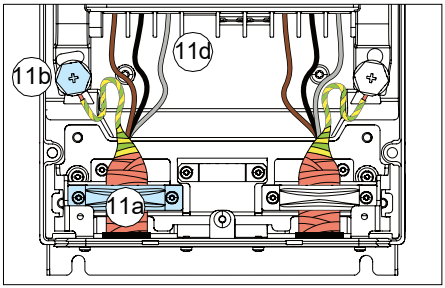

Frame size	R1		R2	
	N·m	lbf·ft	N·m	lbf·ft
L1, L2, L3	1.0	0.7	1.5	1.1
PE, ⏚	1.5	1.1	1.5	1.1
	1.2	0.9	1.2	0.9

Frame size	R3		R4	
	N·m	lbf·ft	N·m	lbf·ft
L1, L2, L3	3.5	2.6	4.0	3.0
PE, ⏚	1.5	1.1	2.9	2.1
	1.2	0.9	1.2	0.9

IEC

Grounding shelf

12. Frames R1…R2, R4: Install the grounding shelf (included with the mounting screws in a plastic bag in the delivery).

R1…R2

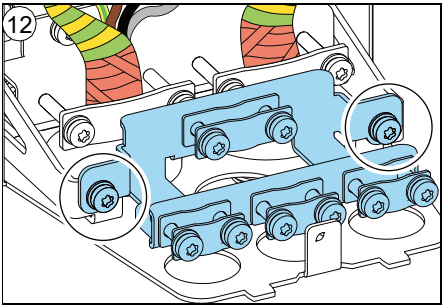

R4

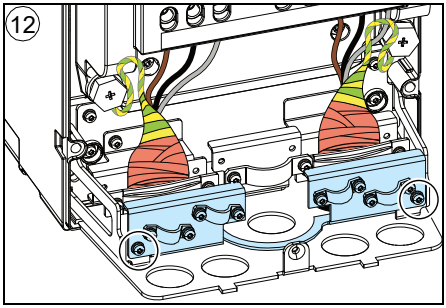

Brake resistor cable (if used)

Frames R1…R3 only

13. Repeat steps *4*…*6* for the brake resistor cable. Cut off one phase conductor.

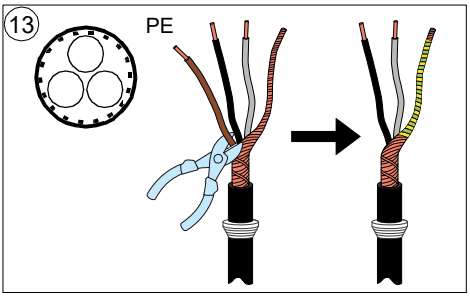

IEC

14. Connect the cable as the motor cable in step 7. Ground the shield 360 degrees (14a). Connect the twisted shield to the grounding terminal (14b) and the conductors to the R+ and R- terminals (14c) and tighten to the torque given in the table.

R1…R2

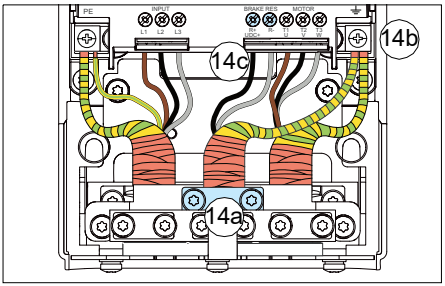

R3

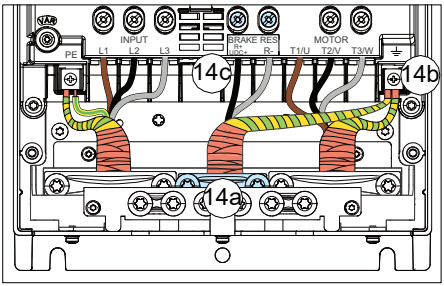

Frame size	R1		R2		R3	
	N·m	lbf·ft	N·m	lbf·ft	N·m	lbf·ft
R+, R-	1.0	0.7	1.5	1.1	3.5	2.6
PE, ⏚	1.5	1.1	1.5	1.1	1.5	1.1
	1.2	0.9	1.2	0.9	1.2	0.9

Finalization

Note: Frame R1: You have to install any optional I/O extension module, if used, in options slot 2 at this point. See section *Installing option modules* on page *159*.

15. Secure the cables outside the unit mechanically.

16. Ground the motor cable shield at the motor end. For minimum radio frequency interference, ground the motor cable shield 360 degrees at the cable entry of the motor terminal box.

IEC

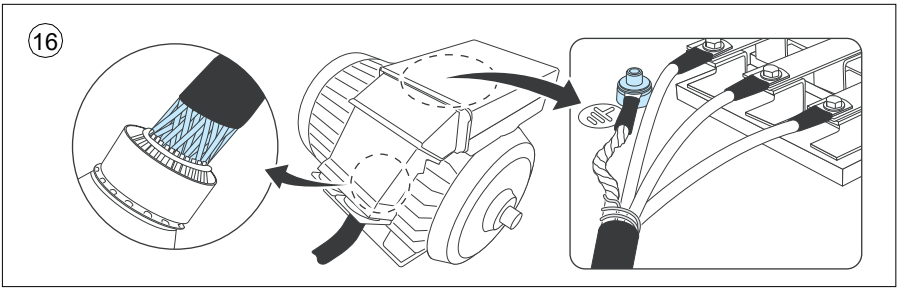

Connection procedure, frame R5

IP21 (UL Type 1)

1. Remove the module cover: Loosen the retaining screws with a T20 Torx screwdriver (1a) and lift the cover from the bottom outwards (1b) and then up (1c).

   Remove the box cover: Loosen the retaining screws with a screwdriver (1d) and slide the cover downwards (1e).

IP55 (UL Type 12)

1. Remove the front cover: Loosen the retaining screws with a T20 Torx screwdriver (1a) and lift the cover from the bottom outwards (1b) and then up (1c).

IP21 (UL Type 1)

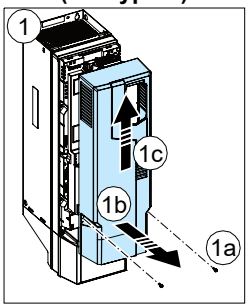

IP21 (UL Type 1)

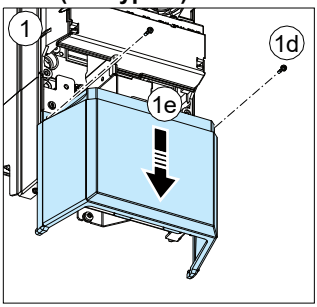

IP55 (UL Type 12)

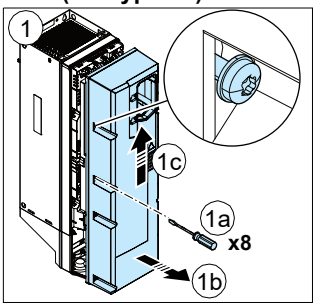

WARNING! If you install the drive on any other system than symmetrically grounded TN-S system, see section *Checking the compatibility with IT (ungrounded), corner-grounded delta, midpoint-grounded delta and TT systems* on page *116* if you have to disconnect the EMC filter and ground-to-phase varistor.

IEC

2. Attach the residual voltage warning sticker in the local language next to the control board.
3. Remove the shroud on the power cable terminals by releasing the clips with a screwdriver (3a) and pulling the shroud out (3b).

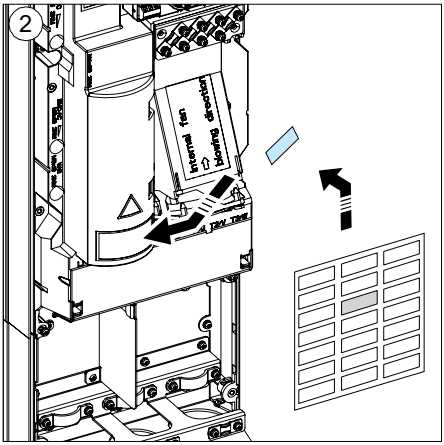

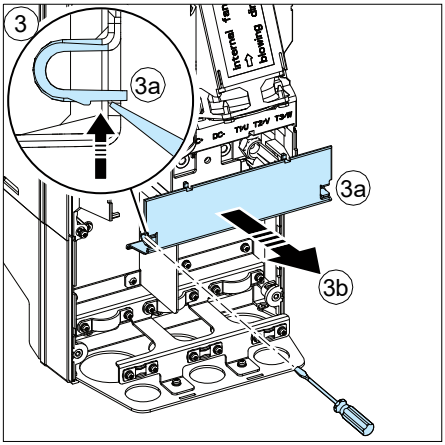

IEC

Motor cable

Use symmetrical shielded cable for motor cabling. If the cable shield is the sole PE conductor for drive or motor, make sure that is has sufficient conductivity for the PE.

4. Cut an adequate hole into the rubber grommet. Slide the grommet onto the cable.
5. Prepare the ends of the motor cable as illustrated in figures 5a and 5b (two different motor cable types are shown). If you use aluminum cables, put grease to the peeled aluminum cable before connecting it to the drive. **Note:** The bare shield will be grounded 360 degrees. Mark the pigtail made from the shield as a PE conductor with yellow-and-green color.

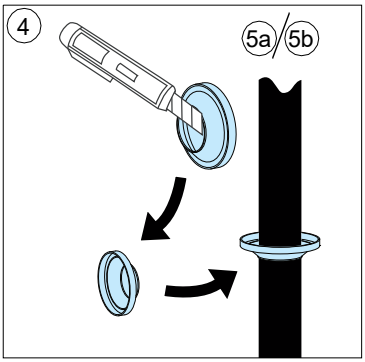

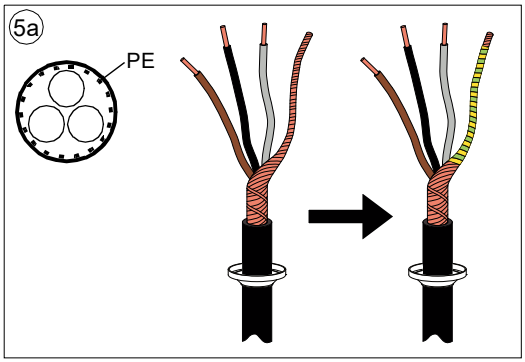

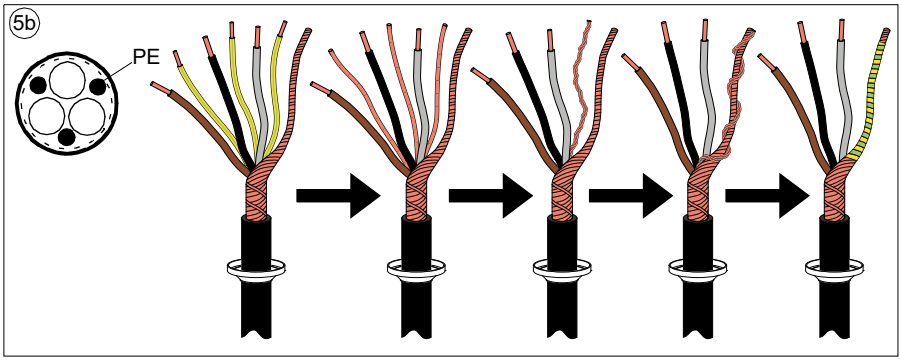

IEC

6. Slide the cable through the hole of the bottom plate and attach the grommet to the hole.

7. Connect the motor cable:
   - Ground the shield 360 degrees by tightening the clamp of the power cable grounding shelf onto the stripped part of the cable (7a).
   - Connect the twisted shield of the cable to the grounding terminal (7b).
   - Connect the phase conductors of the cable to the T1/U, T2/V and T3/W terminals (7c). Tighten the screws to the torque given in the table.

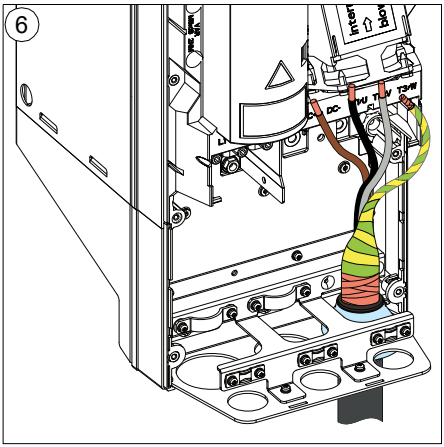

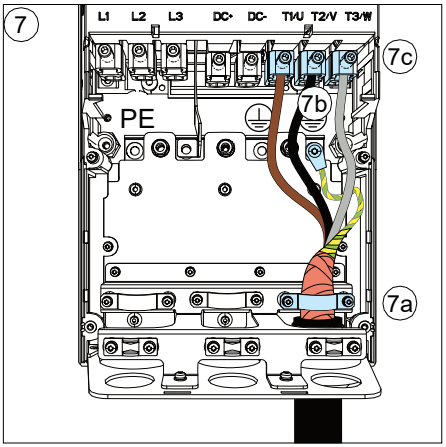

Frame size	T1/U, T2/V, T3/W		PE, ⏚				
	N·m	lbf·ft	M	N·m	lbf·ft	N·m	lbf·ft
R5	5.6	4.1	M5	2.2	1.6	1.2	0.9

IEC

Input power cable

8. Repeat steps *4*…*6* for the input power cable.

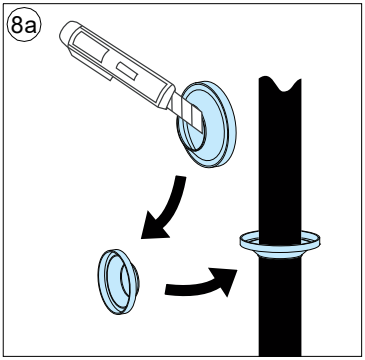

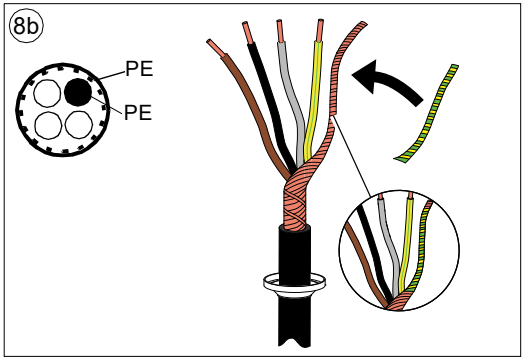

9. Connect the input power cable. Use terminals L1, L2 and L3. Tighten the screws to the torque given in the table.

10. Install the cable box plate. Position the plate (10a) and tighten the screw (10b).

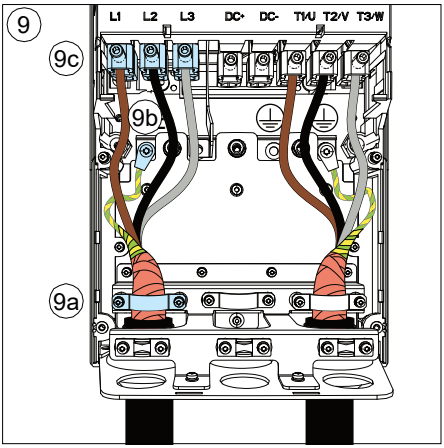

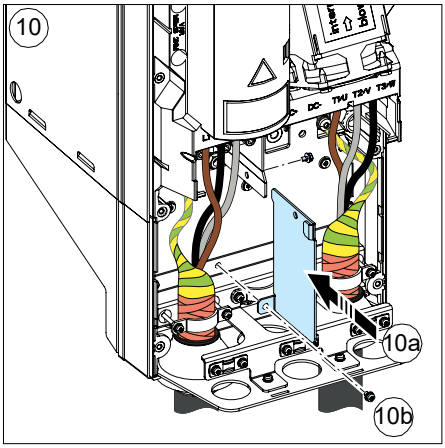

Frame size	L1, L2, L3		PE, ⏚				
	N·m	lbf·ft	M	N·m	lbf·ft	N·m	lbf·ft
R5	5.6	4.1	M5	2.2	1.6	1.2	0.9

IEC

11. Reinstall the shroud on the power terminals by putting the tabs at the top of the shroud in their counterparts on the drive frame (11a) and then pressing the shroud in place (11b).

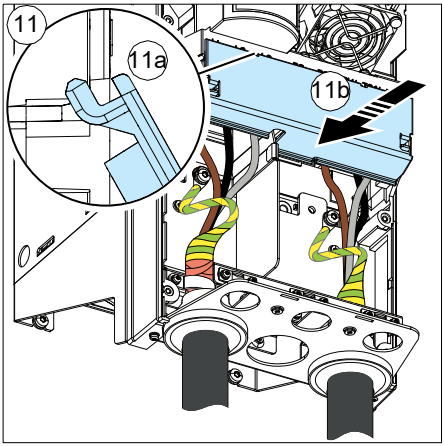

Finalization

12. Secure the cables outside the unit mechanically.

13. Ground the motor cable shield at the motor end. For minimum radio frequency interference, ground the motor cable shield 360 degrees at the cable entry of the motor terminal box.

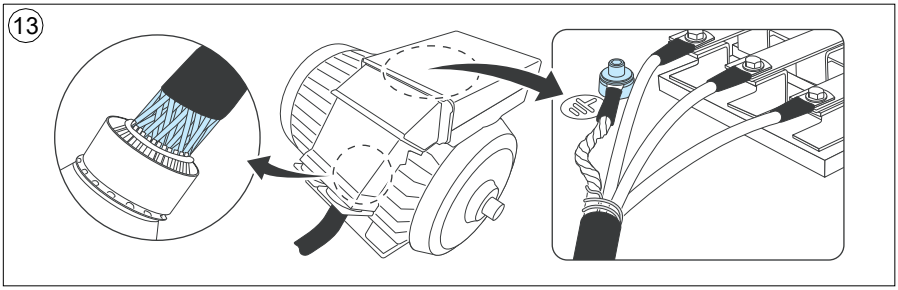

IEC

Connection procedure, frames R6…R9

WARNING! If you install the drive on any other system than symmetrically grounded TN-S system, see section *Checking the compatibility with IT (ungrounded), corner-grounded delta, midpoint-grounded delta and TT systems* on page *116* if you have to disconnect the EMC filter and ground-to-phase varistor.

1. Attach the residual voltage warning sticker in the local language next to the control board.
2. Remove the side plates of the cable box: Remove the retaining screws (2a) and slide the walls out (2b).

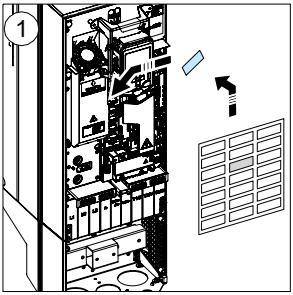

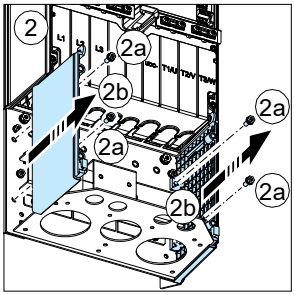

3. Remove the shroud on the power cable terminals by releasing the clips with a screwdriver (3a) and pulling the shroud out (3b).
4. Knock out holes in the shroud for the cables to be installed.
5. Frames R8…R9: If you install parallel cables, also knock out holes in the lower shroud for the cables to be installed.

IEC

R6…R9

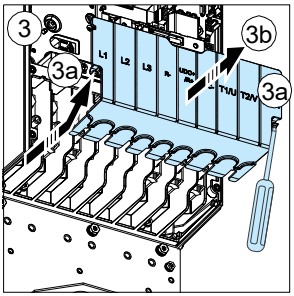

R6…R9

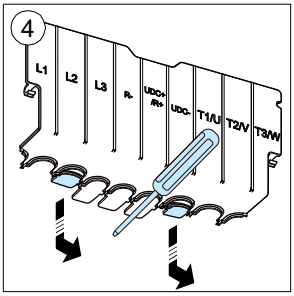

R8…R9

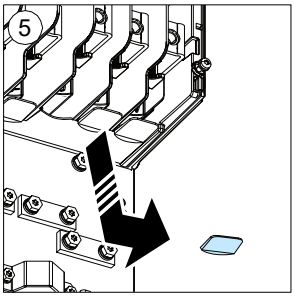

Motor cable

6. Cut an adequate hole into the rubber grommet. Slide the grommet onto the cable.
7. Prepare the ends of the input power cable and motor cable as illustrated in the figure. If you use aluminum cables, put grease to the peeled aluminum cable before connecting it to the drive. Two different motor cable types are shown in the figures (7a, 7b). **Note:** The bare shield will be grounded 360 degrees. Mark the pigtail made from the shield as a PE conductor with yellow-and-green color.

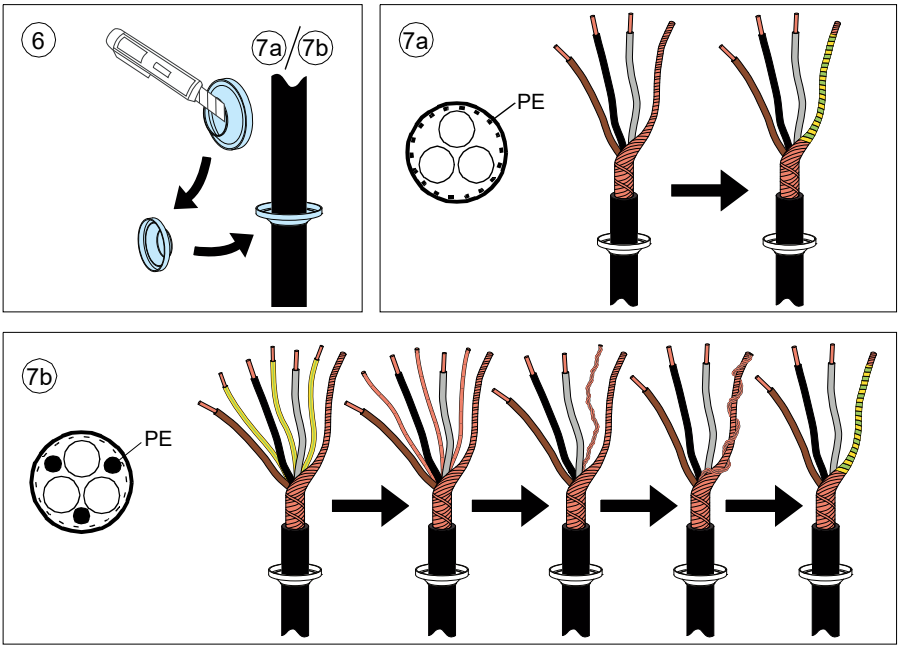

IEC

8. Slide the cables through the holes in the cable entry and attach the grommets to the holes (the motor cable to the right and the input power cable to the left).
9. Connect the motor cable:
   - Ground the shield 360 degrees under the grounding clamps.
   - Connect the twisted shield of the cable to the grounding terminal (9a).
   - Connect the phase conductors of the cable to terminals T1/U, T2/V and T3/W. Tighten the screws to the torque given in the table (9b).

   Note 1 for frames R8…R9: If you connect only one conductor to the connector, ABB recommends that you put it under the upper pressure plate. If you use parallel power cables, put the first conductor under the lower pressure plate and the second under the upper one.

Note 2 for frames R8…R9: The connectors are detachable but ABB does not recommend that you detach them. If you do, detach and reinstall the connectors as described in section *Detaching and reinstalling the connectors* on page *139*.

Input power cable

10. Connect the input power cable as in step *9*. Use terminals L1, L2 and L3.

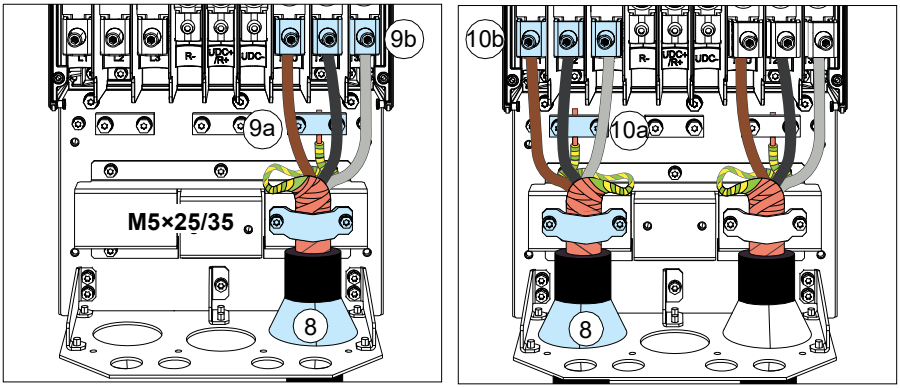

Frame size	L1, L2, L3, T1/U, T2/V, T3/W		PE, ⏚			
	N·m	lbf·ft	N·m	N·m	N·m	lbf·ft
R6	30	22.1	9.8	7.2	1.2	0.9
R7	40	29.5	9.8	7.2	1.2	0.9
R8	40	29.5	9.8	7.2	1.2	0.9
R9	70	51.6	9.8	7.2	1.2	0.9

Detaching and reinstalling the connectors

IEC

This is possible but not recommended.

Terminals T1/U, T2/V and T3/W

- Remove the nut that attaches the connector to its busbar.
- Put the conductor under the connector pressure plate and pre-tighten the conductor.
- Put the connector back to its busbar. Start the nut, and turn it at least two rotations by hand.

WARNING! Before using tools, make sure that the nut/screw is not cross-threading. Cross-threading will damage the drive and cause danger.

- Tighten the nut to a torque of 30 N·m (22 lbf·ft).
- Tighten the conductor(s) to 40 N·m (30 lbf·ft) for frame R8 or to 70 N·m (52 lbf·ft) for frame R9.

Terminals L1, L2 and L3

- Remove the combi screw that attaches the connector to its terminal post, and pull the connector off.
- Put the conductor under the connector pressure plate and pre-tighten the conductor.
- Put the connector back onto the terminal post. Start the combi screw, and turn it at least two rotations by hand.

WARNING! Before using tools, make sure that the nut/screw is not cross-threading. Cross-threading will damage the drive and cause danger.

- Tighten the combi screw to a torque of 30 N·m (22 lbf·ft).
- Tighten the conductor(s) to 40 N·m (30 lbf·ft) for frame R8 or to 70 N·m (52 lbf·ft) for frame R9.

11. Frames R8…R9: If you install parallel cables, install the second grounding shelf for the parallel power cables (11a). Repeat steps *6*...*11* (11b).

R8…R9

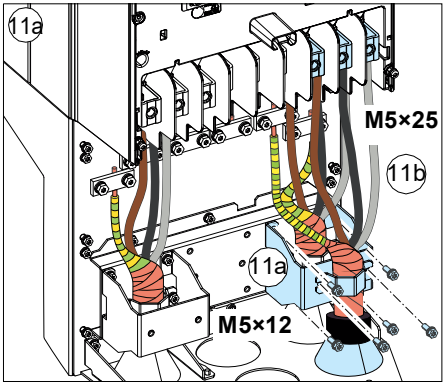

R8…R9

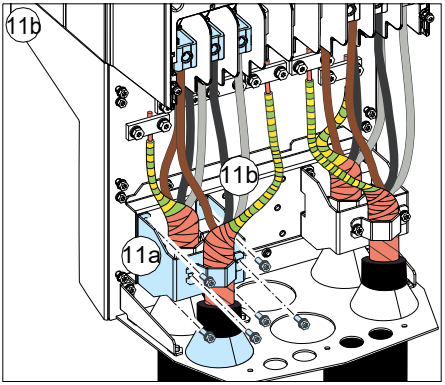

IEC

12. Install the grounding shelf of the control cables.
13. Reinstall the shroud on the power terminals.
14. Secure the cables outside the unit mechanically.

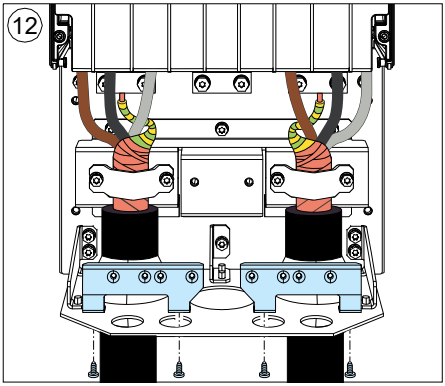

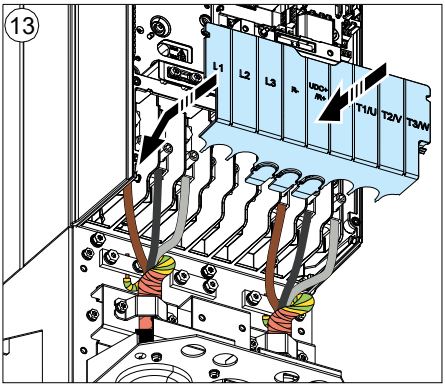

15. Ground the motor cable shield at the motor end. For minimum radio frequency interference, ground the motor cable shield 360 degrees at the cable entry of the motor terminal box.

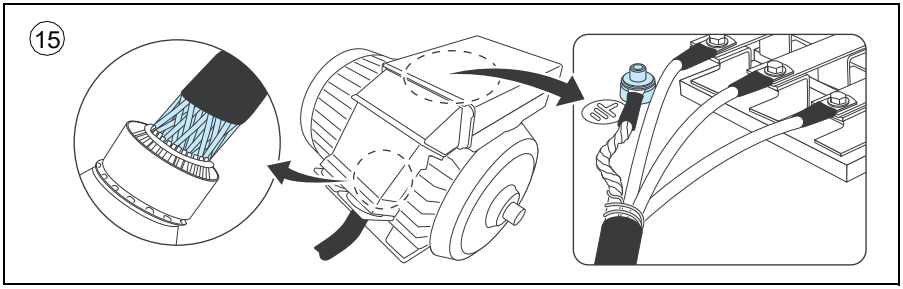

IEC

DC connection

The UDC+ and UDC- terminals (as standard in frames R4…R9) are for using external brake chopper units.

Connecting the control cables

See section *Default I/O connection diagram (HVAC default configuration)* on page *143* for the default I/O connections of the HVAC default configuration.

Connect the cables as described under *Control cable connection procedure R1…R9* on page *153*.

Default I/O connection diagram (HVAC default configuration)

R1…R5

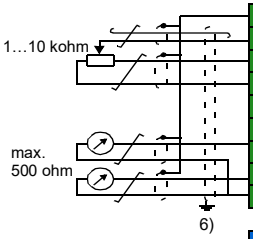

X1	Reference voltage and analog inputs and outputs	
1	SCR	Signal cable shield (screen)
2	AI1	**Output frequency/speed reference**: 0…10 V[1)]
3	AGND	Analog input circuit common
4	+10V	Reference voltage 10 V DC
5	AI2	**Actual feedback:** 0…20 mA[1)]
6	AGND	Analog input circuit common
7	AO1	**Output frequency:** 0…10 V
8	AO2	**Motor current:** 0…20 mA
9	AGND	Analog output circuit common

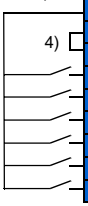

X2 & X3	Aux. voltage output and programmable digital inputs	
10	+24V	Aux. voltage output +24 V DC, max. 250 mA[2)]
11	DGND	Aux. voltage output common
12	DCOM	Digital input common for all
13	DI1	**Stop (0) / Start (1)**
14	DI2	Not configured
15	DI3	**Constant frequency/speed selection**[3)]
16	DI4	**Start interlock 1 (1 = allow start)**
17	DI5	Not configured
18	DI6	Not configured

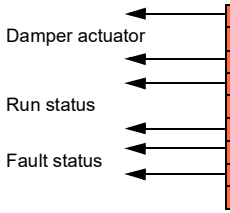

X6, X7, X8	Relay outputs	
19	RO1C	**Damper control**
20	RO1A	250 V AC / 30 V DC
21	RO1B	2 A
22	RO2C	**Running**
23	RO2A	250 V AC / 30 V DC
24	RO2B	2 A
25	RO3C	**Fault (-1)**
26	RO3A	250 V AC / 30 V DC
27	RO3B	2 A

X5	Embedded fieldbus	
29	B+	Embedded fieldbus, EFB (EIA-485)
30	A-	
31	DGND	
S4	TERM	Termination switch
S5	BIAS	Bias resistors switch

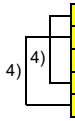

X4	Safe torque off	
34	OUT1	Safe torque off. Factory connection. Both circuits must be closed for the drive to start. See chapter *Safe torque off function* on page *345*.
35	OUT2	
36	SGND	
37	IN1	
38	IN2	

See the notes on page *145*.

IEC

Total load capacity of the Auxiliary voltage output +24V (X2:10) is 6.0 W (250 mA / 24 V DC).

Digital inputs DI1…DI5 also support 10 to 24 V AC.

Wire sizes:

0.2…2.5 mm^2 (24…14 AWG): Terminals +24V, DGND, DCOM, B+, A-, DGND, Ext. 24V

0.14…1.5 mm^2 (26…16 AWG): Terminals DI, AI, AO, AGND, RO, STO

Tightening torques: 0.5…0.6 N·m (0.4 lbf·ft)

R6…R9

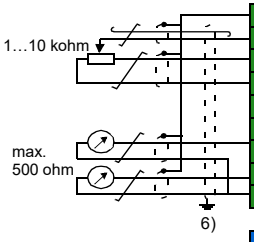

X1	Reference voltage and analog inputs and outputs	
1	SCR	Signal cable shield (screen)
2	AI1	**Output frequency/speed reference**: 0…10 V[1)]
3	AGND	Analog input circuit common
4	+10V	Reference voltage 10 V DC
5	AI2	**Actual feedback:** 0…20 mA[1)]
6	AGND	Analog input circuit common
7	AO1	**Output frequency:** 0…10 V
8	AO2	**Motor current:** 0…20 mA
9	AGND	Analog output circuit common
X2 & X3	Aux. voltage output and programmable digital inputs	
10	+24V	Aux. voltage output +24 V DC, max. 250 mA[2)]
11	DGND	Aux. voltage output common
12	DCOM	Digital input common for all
13	DI1	**Stop (0) / Start (1)**
14	DI2	Not configured
15	DI3	**Constant frequency/speed selection**[3)]
16	DI4	**Start interlock 1 (1 = allow start)**
17	DI5	Not configured
18	DI6	Not configured
X6, X7, X8	Relay outputs	
19	RO1C	**Damper control** 250 V AC / 30 V DC 2 A
20	RO1A	
21	RO1B	
22	RO2C	**Running** 250 V AC / 30 V DC 2 A
23	RO2A	
24	RO2B	
25	RO3C	**Fault (-1)** 250 V AC / 30 V DC 2 A
26	RO3A	
27	RO3B	
X5	Embedded fieldbus	
29	B+	Embedded fieldbus, EFB (EIA-485)
30	A-	
31	DGND	
S4	TERM	Termination switch
S5	BIAS	Bias resistors switch
X4	Safe torque off	
34	OUT1	Safe torque off. Factory connection. Both circuits must be closed for the drive to start. See chapter *Safe torque off function* on page *345*.
35	OUT2	
36	SGND	
37	IN1	
38	IN2	
X10	24 V AC/DC	
40	24 V AC/DC+ in	Ext. 24V AC/DC input to power up the control unit when the main supply is disconnected.
41	24 V AC/DC- in	

Damper actuator

Run status

Fault status

See the notes on page *145*.

IEC

Total load capacity of the Auxiliary voltage output +24V (X2:10) is 6.0 W (250 mA / 24 V DC).

Digital inputs DI1…DI5 also support 10 to 24 V AC.

Wire sizes: 0.14…2.5 mm^2 (26…16 AWG): All terminals

Tightening torques: 0.5…0.6 N·m (0.4 lbf·ft)

Notes:

1) Current [0(4)…20 mA, R_{in} = 100 ohm] or voltage [0(2)…10 V, R_{in} > 200 kohm]. Change of setting requires changing the corresponding parameter.

2) Total load capacity of the Auxiliary voltage output +24V (X2:10) is 6.0 W (250 mA / 24 V).

3) In scalar control: See **Menu > Primary settings > Start, stop, reference > Constant speeds / constant frequencies** or parameter group 28 Frequency reference chain.
In vector control: See **Menu > Primary setting > Start, stop, reference > Constant speeds / constant frequencies** or parameter group 22 Speed reference selection.

DI3	Operation/Parameter	
	Scalar control (default)	**Vector control**
0	Set frequency through AI1	Set speed through AI1
1	28.26 Constant frequency 1	22.26 Constant speed 1

4) Connected with jumpers at the factory.

5) Use shielded twisted-pair cables for digital signals.

6) Ground the outer shield of the cable 360 degrees under the grounding clamp on the grounding shelf for the control cables.

Further information on the usage of the connectors and switches is given in the sections below. See also section *Control connection data* on page *289*.

Switches

Switch	Description	Position	
S4 (TERM)	EFB link termination. Must be set to the terminated (ON) position when the drive is the first or last unit on the link.	ON TERM	Bus not terminated (**default**)
		ON TERM	Bus terminated
S5 (BIAS)	Activates on the biasing voltages to the bus. One (and only one) device, preferably at the end of the bus must have the bias on.	ON BIAS	Bias off (**default**)
		ON BIAS	Bias on

IEC

PNP configuration for digital inputs

Internal and external +24 V power supply connections for PNP configuration are shown in the figure below.

Internal +24 V power supply

PNP connection (source)

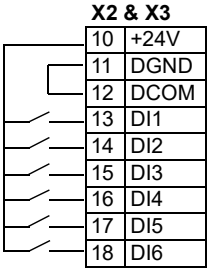

External +24 V power supply

PNP connection (source)

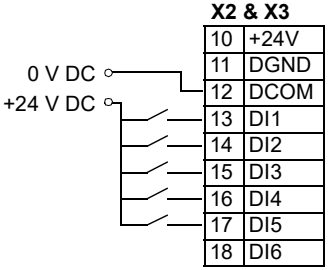

Note: DI6 is not supported in the PNP configuration with external +24 V power supply.

WARNING! Do not connect the +24 V AC cable to the control board ground when the control board is powered using an external 24 V AC supply.

NPN configuration for digital inputs

Internal and external +24 V power supply connections for NPN configuration are shown in the figure below.

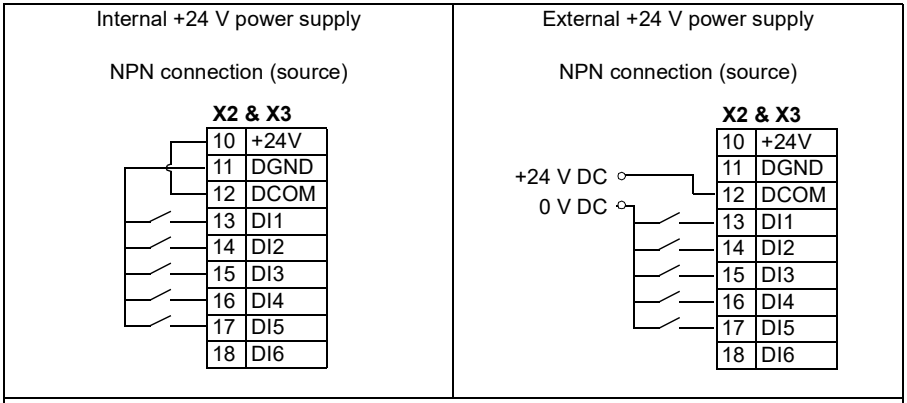

Note: DI6 is not supported in the NPN configuration.

WARNING! Do not connect the +24 V AC cable to the control board ground when the control board is powered using an external 24 V AC supply.

IEC

Connection for obtaining 0…10 V from analog output 2 (AO2)

To obtain 0…10 V from analog output AO2, connect a 500 ohm resistor (or two 1 kohm resistors in parallel) between the analog output 2 AO2 and analog common ground AGND.

Examples are shown in the figure below.

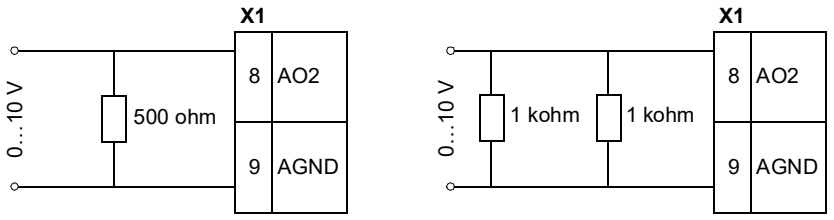

8	AO2. Analog output 2. Default output 0…20 mA.
9	AGND. Analog common ground. Internally connected to chassis through a 2 Mohm resistor.

Connection examples of two-wire and three-wire sensors

Note: Maximum capability of the auxiliary 24 V DC (250 mA) output must not be exceeded.

Two-wire sensor/transmitter

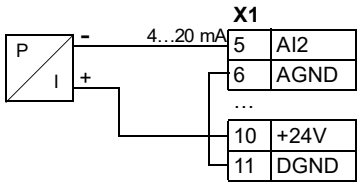

5	AI2	Process actual value measurement or reference, 0(4)…20 mA, R_{in} = 100 ohm
6	AGND	
10	+24V	Auxiliary voltage output, non-isolated, +24 V DC, max. 250 mA
11	DGND	

Three-wire sensor/transmitter

Note: The sensor is supplied through its current output and the drive feeds the supply voltage (+24 V DC). Thus the output signal must be 4…20 mA, not 0…20 mA.

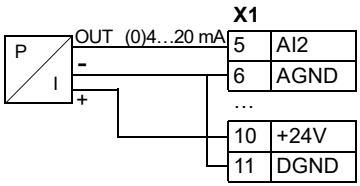

5	AI2	Process actual value measurement or reference, 0(4)…20 mA, R_{in} = 100 ohm
6	AGND	
10	+24V	Auxiliary voltage output, non-isolated, +24 V DC, max. 250 mA
11	DGND	

DI5 as frequency input

For setting the parameters for the digital frequency input, see *ACH580 HVAC control program firmware manual* (3AXD50000027537 [English]).

DI6 as PTC input

If DI6 is used as a PTC input, see *ACH580 HVAC control program firmware manual* (3AXD50000027537 [English]) for how to set parameters accordingly.

Note: If DI6 is used as PTC input, the wiring and the PTC sensor need to be double isolated. Otherwise the CMOD-02 I/O extension module must be used.

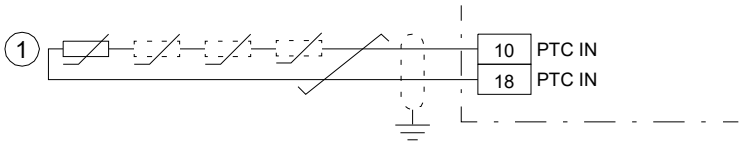

1	One to six PTC thermistors connected in series.

AI1 and AI2 as Pt100, Pt1000, Ni1000, KTY83 and KTY84 sensor inputs (X1)

One, two or three Pt100 sensors; one, two or three Pt1000 sensors; or one Ni1000, KTY83 or KTY84 sensor for motor temperature measurement can be connected between an analog input and output as shown below. Do not connect both ends of the cable shields directly to ground. If a capacitor cannot be used at one end, leave that end of the shield unconnected.

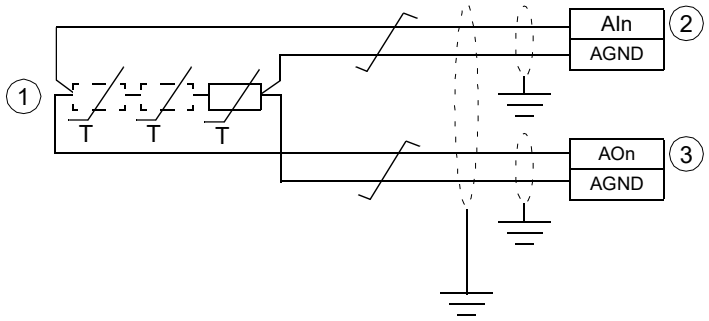

1	1…3 × (Pt100 or Pt1000) or 1 × (Ni1000 or KTY83 or KTY84)
2	Select the input type to voltage for analog input AI1 or AI2 with parameters. Set the appropriate analog input unit to V (volt) in parameter group 12 Standard AI.
3	Select the excitation mode in parameter group 13 Standard AO.

WARNING! As the inputs pictured above are not insulated according to IEC 60664, the connection of the motor temperature sensor requires double or reinforced insulation between motor live parts and the sensor. If the assembly does not fulfill the requirement, the I/O board terminals must be protected against contact and must not be connected to other equipment or the temperature sensor must be isolated from the I/O terminals.

Safe torque off (X4)

For the drive to start, both connections (+24 V DC to IN1 and +24 V DC to IN2) must be closed. By default, the terminal block has jumpers to close the circuit. Remove the jumpers before connecting an external Safe torque off circuitry to the drive. See chapter *Safe torque off function* on page *345*.

Note: Only 24 V DC can be used for STO. Only PNP input configuration can be used.

Control cable connection procedure R1…R9

WARNING! Obey the instructions in chapter *Safety instructions* on page *15*. If you ignore them, injury or death, or damage to the equipment can occur.

1. Stop the drive and do the steps in section *Precautions before electrical work* on page *18* before you start the work.
2. Remove the front cover(s) if not already removed. See page *124* (R1…R4), page *131* (R5) or page *79* (R6…R9).

Analog signals
The figures for frames R1…R2 and R3 (page *155*), R4 (page *156*), R5 (page *157*) and R6…R9 (page *158*) show an example of connecting a cable. Make the connections according to the default configuration.

3. Cut an adequate hole into the rubber grommet and slide the grommet onto the cable. Slide the cable through a hole in the cable entry and attach the grommet to the hole.
4. Ground the outer shield of the cable 360 degrees under the grounding clamp. Keep the cable unstripped as close to the terminals of the control board as possible.
   Frames R5…R9: Secure the cables mechanically at the clamps below the control board.
   Ground also the pair-cable shields and grounding wire at the SCR terminal.
5. Route the cable as shown in the figures on pages *155* (R1…R2 and R3), *156* (R4), *157* (R5) or *158* (R6…R9).
6. Connect the conductors to the appropriate terminals of the control board and tighten to 0.5…0.6 N·m (0.4 lbf·ft).

IEC

Digital signals
The figures for frames R1…R2 and R3 (page *155*), R4 (page *156*), R5 (page *157*) and R6…R9 (page *158*) show an example of connecting a cable. Make the connections according to the default configuration.

7. Cut an adequate hole into the rubber grommet and slide the grommet onto the cable. Slide the cable through the hole in the cable entry and attach the grommet to the hole.
8. Ground the outer shield of the cable 360 degrees under the grounding clamp. Keep the cable unstripped as close to the terminals of the control board as possible.
   Frames R5…R9: Secure the cables mechanically at the clamps below the control board.
   If you use double-shielded cables, ground also the pair-cable shields and grounding wire at the SCR terminal.

9. Route the cable as shown in the figures on pages *155* (R1…R2 and R3), *156* (R4), *157* (R5) or *158* (R6…R9).
10. Connect the conductors to the appropriate terminals of the control board and tighten to 0.5…0.6 N·m (0.4 lbf·ft).
11. Tie all control cables to the provided cable tie mounts.

Note:

- Leave the other ends of the control cable shields unconnected or ground them indirectly via a high-frequency capacitor with a few nanofarads, eg, 3.3 nF / 630 V. The shield can also be grounded directly at both ends if they are *in the same ground line* with no significant voltage drop between the end points.
- Keep any signal wire pairs twisted as close to the terminals as possible. Twisting the wire with its return wire reduces disturbances caused by inductive coupling.

R1…R2

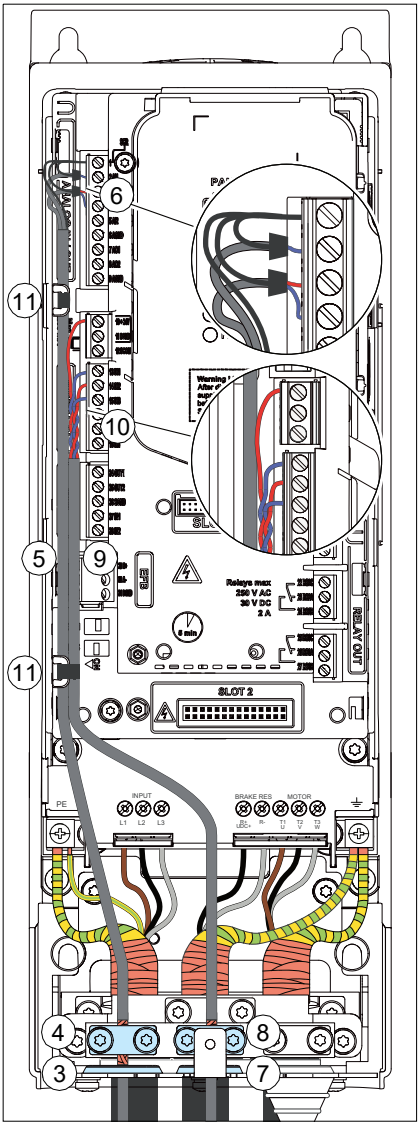

R1…R2: 0.5…0.6 N·m (0.4 lbf·ft)

R3

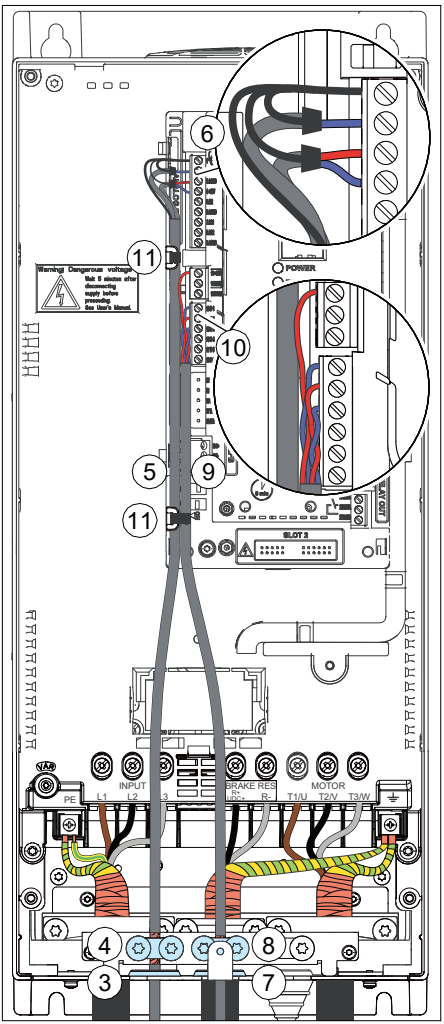

R3: 0.5…0.6 N·m (0.4 lbf·ft)

IEC

R4

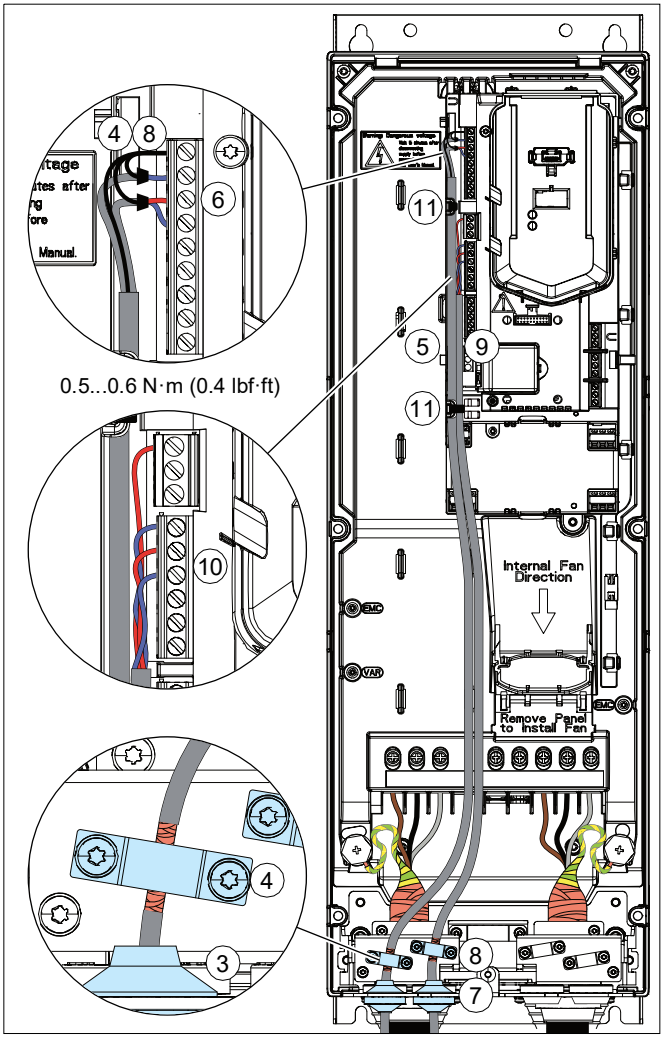
4
8
6
0.5...0.6 N·m (0.4 lbf·ft)
11
5
9
11
10
Internal Fan Direction
EMC
VAR
EMC
Remove Panel to Install Fan
4
3
8
7

IEC

R5

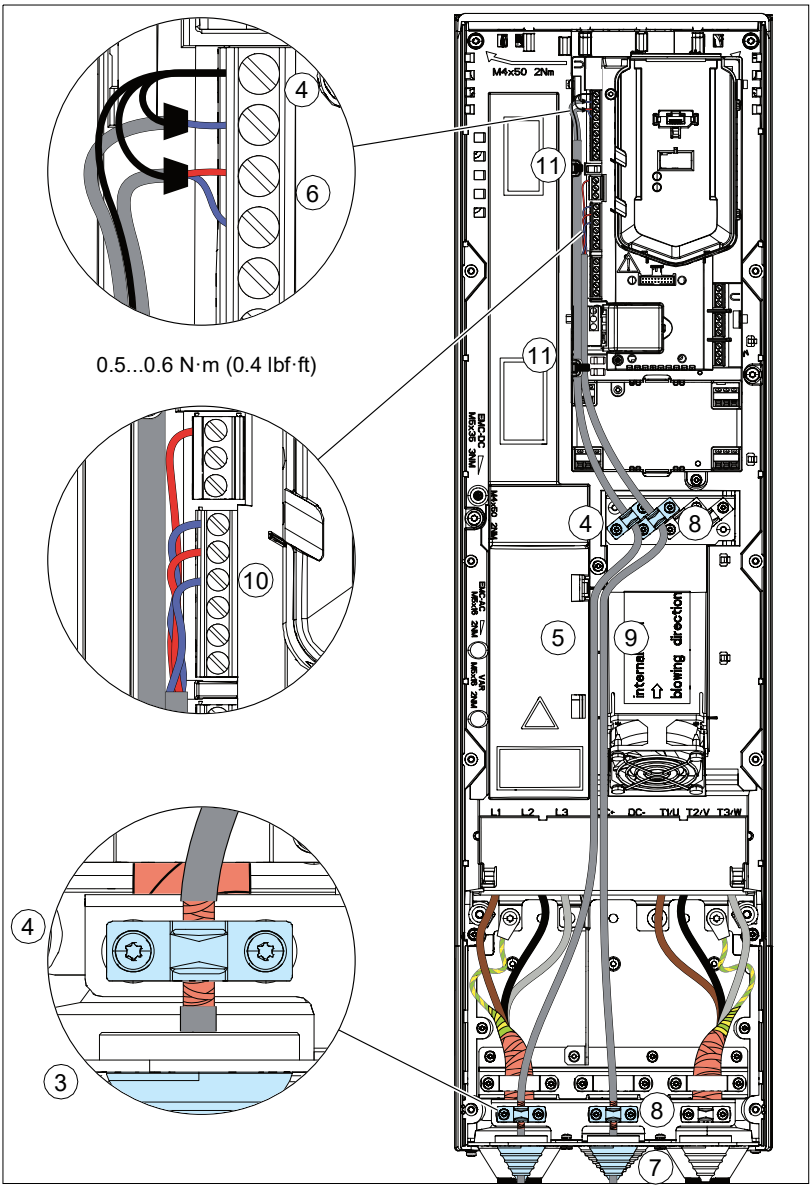
4
6
0.5...0.6 N·m (0.4 lbf·ft)
10
4
3
11
11
M4x50 2Nm
4
8
5
9
internal
blowing direction
L1 L2 L3
DC- T1/U T2/V T3/W
8
7

IEC

R6…R9

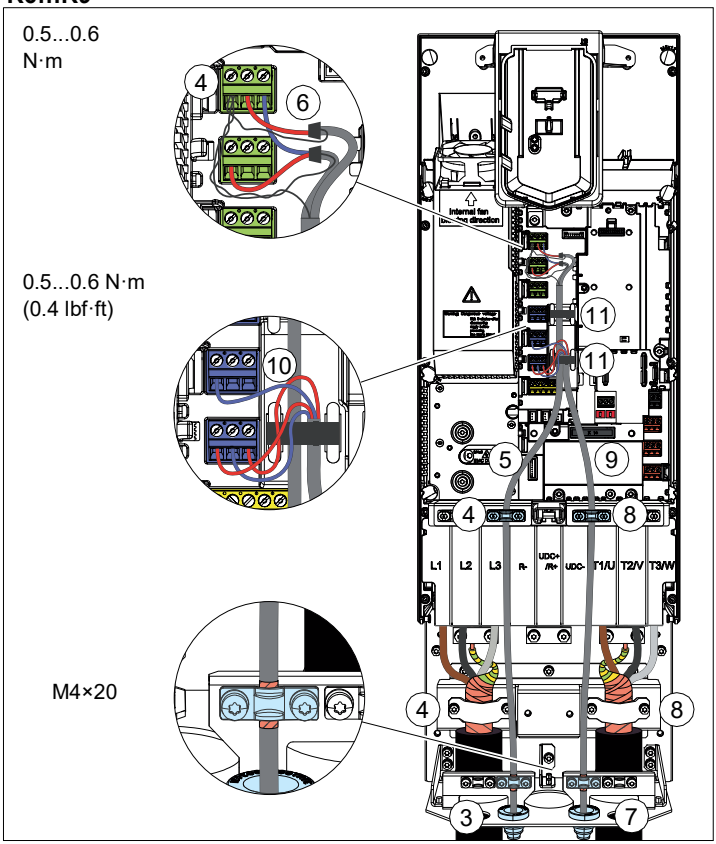
0.5...0.6
N·m
4
6
0.5...0.6 N·m
(0.4 lbf·ft)
10
11
11
5
9
4
8
L1
L2
L3
R-
UDC+
/R+
UDC-
T1/U
T2/V
T3/W
M4×20
4
8
3
7

IEC

Installing option modules

Note: If you will install the FPBA-01 module, see section *FPBA-01 PROFIBUS DP adapter module connectors* on page *101* for suitable connector types.

Mechanical installation of option modules

See section *Overview of power and control connections* page *43* for the available slots for each module. Install the option modules as follows:

WARNING! Obey the instructions in chapter *Safety instructions* on page *15*. If you ignore them, injury or death, or damage to the equipment can occur.

Note: Slot 2 in frames R1…R5 is at U_{DC} potential. You must disconnect power supplies before installing or removing an I/O extension module.

Stop the drive and do the steps in section *Precautions before electrical work* on page *18* before you start the work.

1. Remove the front cover(s) if not already removed. See page *124* (R1…R4), page *131* (R5) or page *79* (R6…R9).

The figures for frames R1…R5 (page *160*) and R6…R9 (page *161*) show an example of installing option modules.

Option slot 2 (I/O extension modules)

2. Frame R1 only: Install the option mounting.
3. Put the module carefully into its position on the control board.
4. Tighten the mounting screw.
5. Tighten the grounding screw (CHASSIS). **Note:** The screw grounds the module. It is necessary for fulfilling the EMC requirements and for proper operation of the module.

Note: Frame R1: The module in option slot 2 covers the power terminals. Do not install a module in option slot 2 before you have installed the power cables.

Option slot 1 (fieldbus adapter modules)

6. Put the module carefully into its position on the control board.
7. Tighten the mounting screw (CHASSIS). **Note:** The screw tightens the connections and grounds the module. It is necessary for fulfilling the EMC requirements and for proper operation of the module.

R1…R2

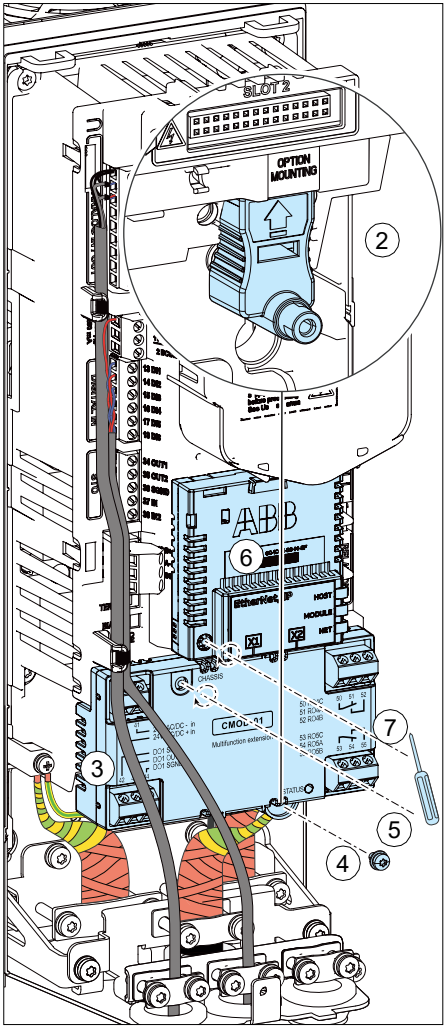

R3…R5

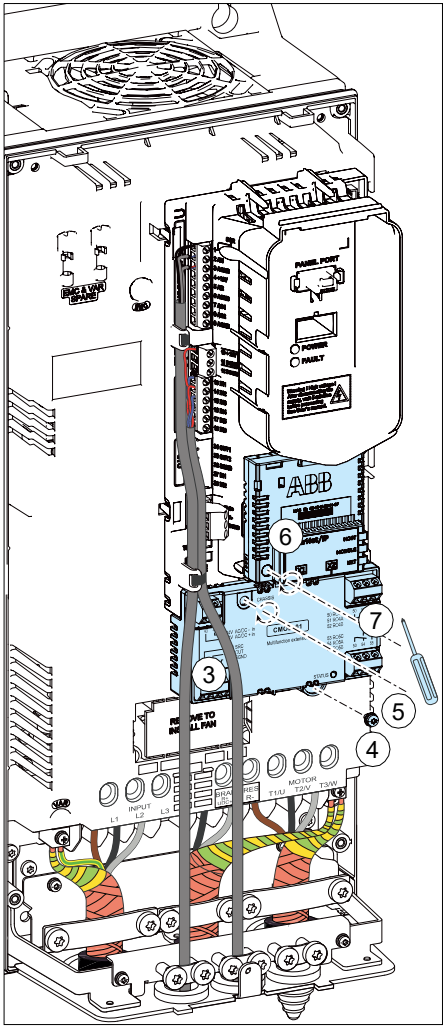

IEC

R6…R9

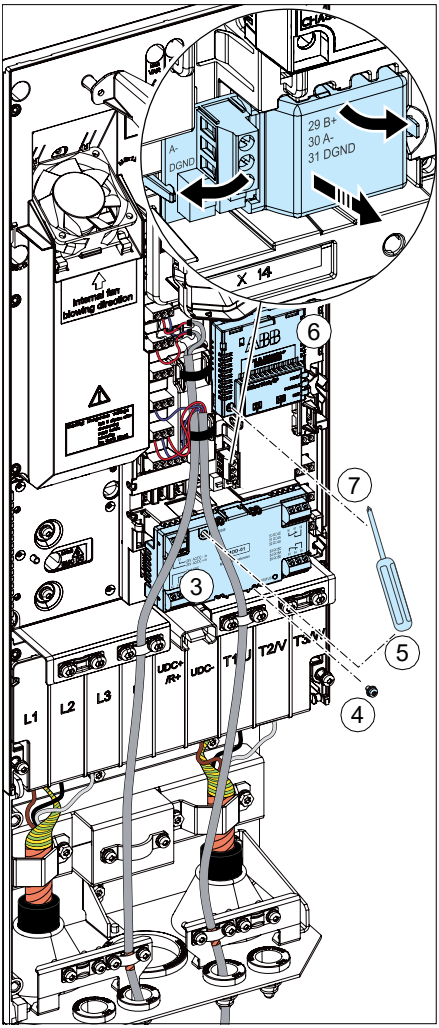

Wiring the modules

For the optional I/O extension modules CHDI-01, CMOD-01 and CMOD-02, see chapter *Optional I/O extension modules* on page *363* for specific installation and wiring instructions. For other option modules, for example, CPTC-02, see the appropriate option module manual.

Reinstalling grommets

UL Type 12: To maintain UL Type 12, reinstall grommets (top of the grommets downwards) to all cable entry holes without conduits.

Reinstalling covers

Reinstalling cover, frames R1…R4

1. Reinstall the cover: Put the tabs on the cover top in their counterparts on the housing (1a) and the press the cover (1b).
2. Tighten the retaining screw at the bottom with a T20 Torx screwdriver.

IP21 (UL Type 1) R1…R2

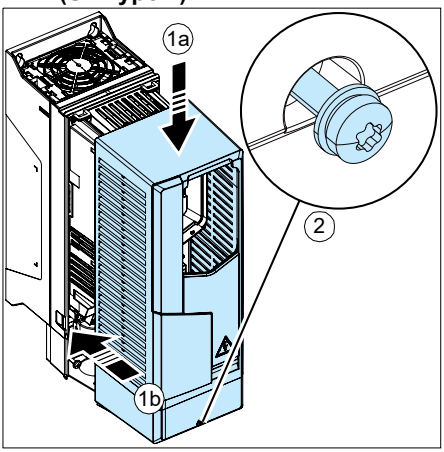

IP21 (UL Type 1) R3…R4

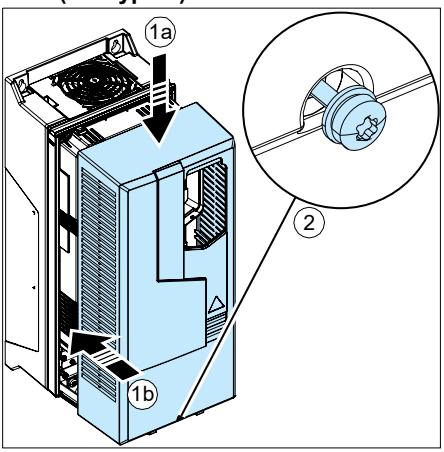

IP55 (UL Type 12) R1…R3

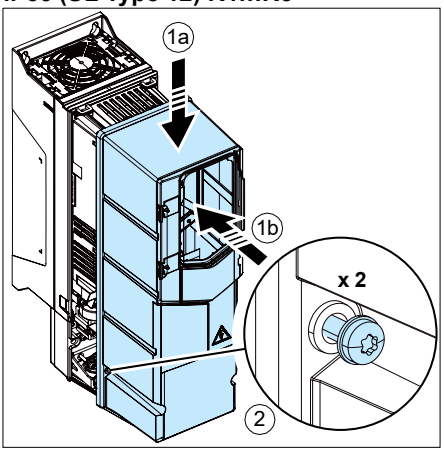

IP55 (UL Type 12) R4

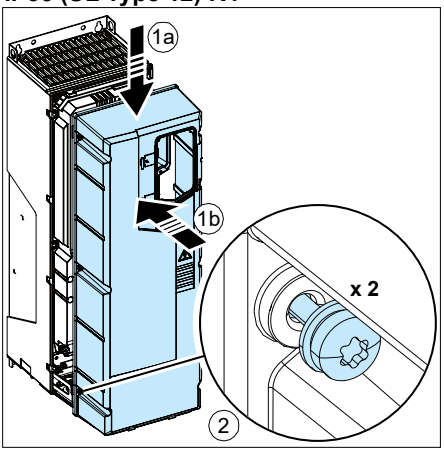

Reinstalling covers, frame R5

IP21 (UL Type 1)

1. Reinstall the box cover: Slide the cover upwards (1a) and tighten the retaining screws (1b) with a T20 Torx screwdriver.
2. Reinstall the module cover: Press the cover at the bottom (2a) and tighten the retaining screws (2b).

IP55 (UL Type 12)

1. Reinstall the front cover: Press the cover at the bottom (1a) and tighten the retaining screws (1b) with a T20 Torx screwdriver.

IP21 (UL Type 1)

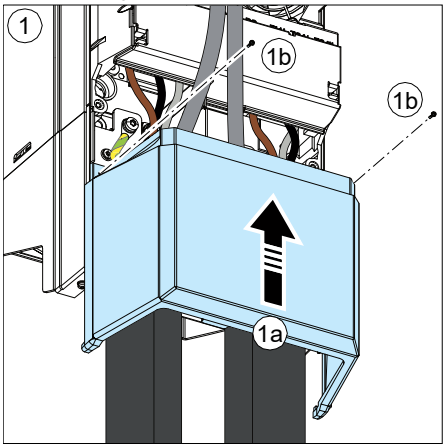

IP21 (UL Type 1)

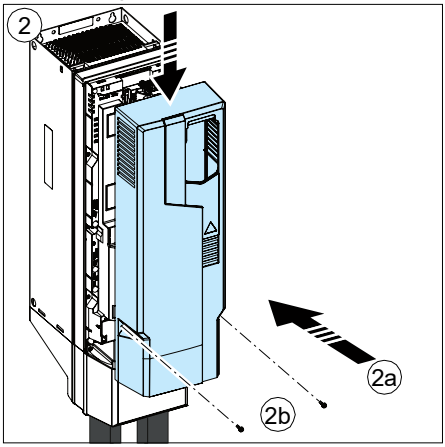

IEC

IP55 (UL Type 12)

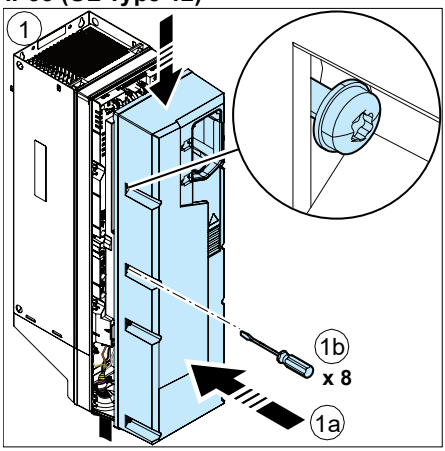

Reinstalling side plates and covers, frames R6…R9

IP21 (UL Type 1)

1. Reinstall the side plates of the cable box. Tighten the retaining screws with a screwdriver with a T20 Torx screwdriver.
2. Slide the cover of the cable box on the module from below until the cover snaps into place.
3. Reinstall the module cover. Tighten the two retaining screws with a screwdriver.

IP55 (UL Type 12)

1. Reinstall the side plates of the cable box. Tighten the retaining screws with a screwdriver with a T20 Torx screwdriver.

IP21 (UL Type 1)

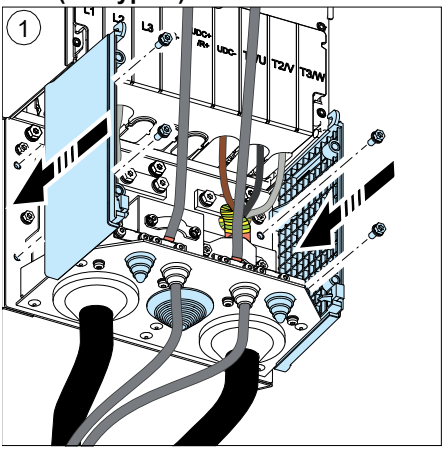

IP21 (UL Type 1)

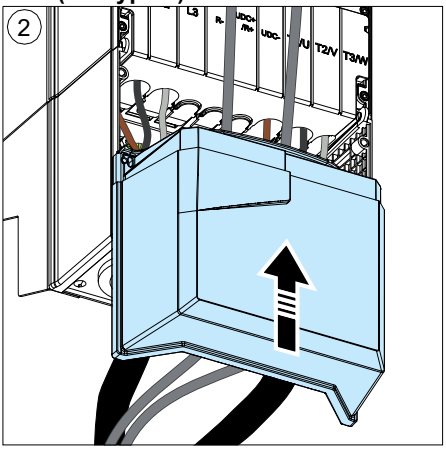

IP21 (UL Type 1)

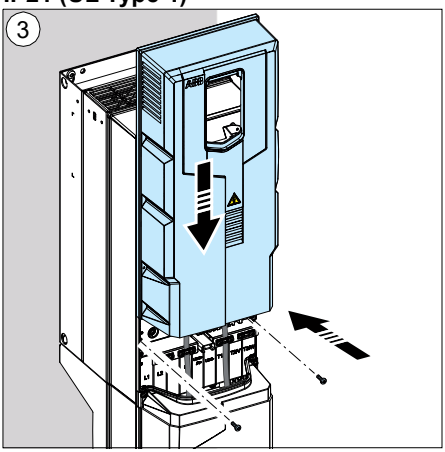

IP55 (UL Type 1)

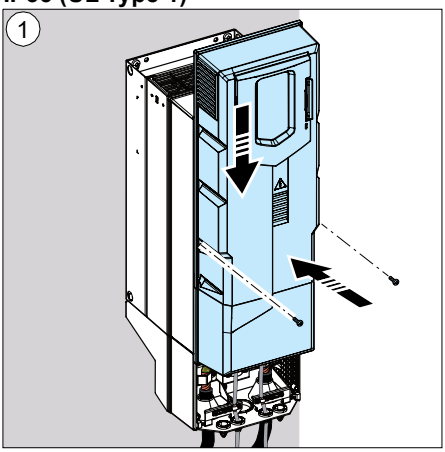

IEC

Connecting a PC

To be able to connect a PC to the drive, you need an assistant control panel (ACH-AP-H or ACH-AP-W). It is also possible to use the CCA-01 configuration adapter when the drive is not connected to the power supply network or external 24 V supply; the CCA-01 does not work if the drive is powered.

Connect a PC to the drive with a USB data cable (USB Type A <-> USB Type Mini-B) as follows:

1. Lift the USB connector cover from bottom upwards.
2. Put the USB cable Mini-B plug in the control panel USB connector.
3. Put the USB cable A-plug in the USB connector of the PC (3a). The panel displays text “USB connected” (3b).

Note: Panel keys cannot be used when a USB data cable is connected to the panel.

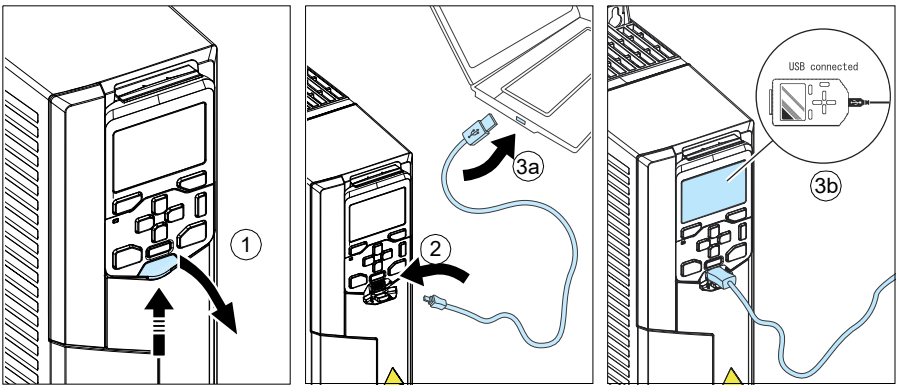

IEC

For information on using the Drive composer PC tool, see *Drive composer PC tool user's manual* (3AUA0000094606 [English]).

You can connect a remote ACH-AP-H or ACH-AP-W control panel to the drive, or to chain the control panel or a PC to several drives on a panel bus with a CDPI-01 communication adapter module. See *CDPI-01 communication adapter module user's manual* (3AXD50000009929 [English]).

7

Electrical installation – North America

Contents of this chapter

This chapter describes how to check the insulation of the assembly and the compatibility with other than symmetrically grounded TN-S systems. It then shows how to connect the power and control cables, install optional modules and connect a PC.

Warnings

WARNING! Obey the instructions in chapter *Safety instructions* on page *15*. If you ignore them, injury or death, or damage to the equipment can occur.

Make sure that the drive is disconnected from the input power during installation. If the drive is already connected to the input power, wait for 5 minutes after disconnecting the input power.

UL NEC

Required tools

To do the electrical installation, you need the these tools:

- wire stripper
- screwdriver set (Torx, flat and/or Phillips, as appropriate)
- torque wrench.

Checking the insulation of the assembly

Checking the insulation is typically not required in North American installations.

Drive

Do not make any voltage tolerance or insulation resistance tests on any part of the drive as testing can damage the drive. Every drive has been tested for insulation between the main circuit and the chassis at the factory. Also, there are voltage-limiting circuits inside the drive which cut down the testing voltage automatically.

Input power cable

Check the insulation of the input power cable according to local regulations before connecting it to the drive.

Motor and motor cable

Check the insulation of the motor and motor cable as follows:

1. Check that the motor cable is disconnected from the drive output terminals T1/U, T2/V and T3/W.
2. Measure the insulation resistance between the phase conductors and between each phase conductor and the Protective Earth conductor. Use a measuring voltage of 1000 V DC. The insulation resistance of a motor must be greater than 100 Mohm (reference value at 25 °C or 77 °F). For the insulation resistance of other motors, please consult the manufacturer's instructions.

   Note: Moisture inside the motor casing will reduce the insulation resistance. If moisture is suspected, dry the motor and repeat the measurement.

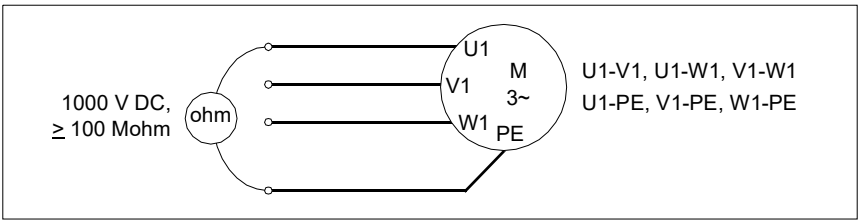

UL NEC

Brake resistor assembly for R1…R3

Check the insulation of the brake resistor assembly (if present) as follows:

1. Check that the resistor cable is connected to the resistor, and disconnected from the drive output terminals R+ and R-.
2. At the drive end, connect the R+ and R- conductors of the resistor cable together. Measure the insulation resistance between the combined conductors and the PE conductor by using a measuring voltage of 1000 V DC. The insulation resistance must be greater than 1 Mohm.

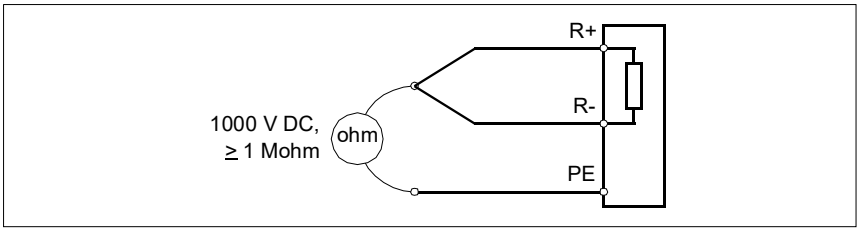

UL NEC

Checking the compatibility with IT (ungrounded), corner-grounded delta, midpoint-grounded delta and TT systems

EMC filter

To connect the drive to symmetrically grounded TN-S systems, you should connect the internal EMC filter if you are concerned with EMC issues. See section *When to connect EMC filter or disconnect ground-to-phase varistor: TN-S, IT, corner-grounded delta and midpoint-grounded delta systems* on page *171*.

WARNING! Do not install a drive with the EMC filter connected to a system that the filter is not suitable for. This can cause danger, or damage the drive.

Note: When the internal EMC filter is disconnected, the EMC compatibility of the drive is considerably reduced. See section *EMC compatibility and motor cable length* on page *288*.

Ground-to-phase varistor

To connect the drive other systems than symmetrically grounded TN-S systems, check what to do. See sections *When to connect EMC filter or disconnect ground-to-phase varistor: TN-S, IT, corner-grounded delta and midpoint-grounded delta systems* on page *171*, and *Guidelines for installing the drive to a TT system* on page *172*.

WARNING! Do not install a drive with the ground-to-phase varistor connected to a system that the varistor is not suitable for. If you do, the varistor circuit can be damaged.

UL NEC

When to connect EMC filter or disconnect ground-to-phase varistor: TN-S, IT, corner-grounded delta and midpoint-grounded delta systems

			Configure the EMC filter based on the electrical system of the installation site		
Frame size	**Screw label**	**Factory default screw material**	**Symmetrically grounded TN systems (TN-S systems), ie. center-grounded-wye (A)**	**Corner-grounded delta (B1) and midpoint-grounded (B2) delta systems**	**IT systems (ungrounded or high-resistance grounded [>30 ohms]) (C)**
R1…R3	EMC (DC)	Plastic	Can install the metal screw[1)]	Maintain the plastic screw[2)]	Maintain the plastic screw[2)]
	VAR	Metal	Maintain the metal screw	Remove the metal screw	Remove the metal screw
R4…R9[3)]	EMC (AC)	Plastic	Can install the metal screw[1)]	Maintain the plastic screw[2)]	Maintain the plastic screw[2)]
	EMC (DC)	Plastic	Can install the metal screw[1)]	Maintain the plastic screw[2)]	Maintain the plastic screw[2)]
	VAR	Metal	Maintain the metal screw	Maintain the metal screw	Remove the metal screw

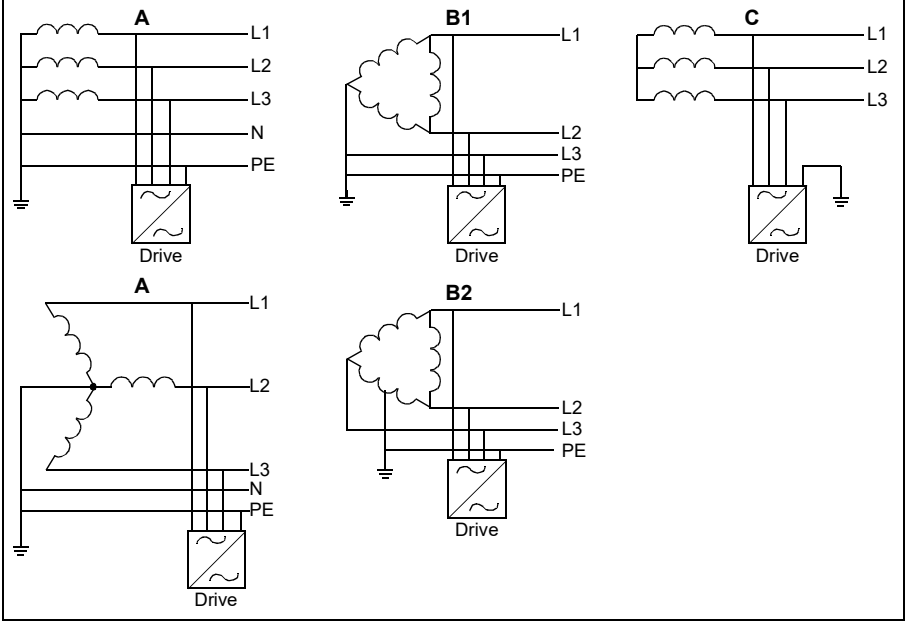

UL NEC

1) You can install metal screw and connect the EMC filter if you are concerned with EMC issues.

2) Metal screw must not be used, plastic screw may be maintained or removed from the AC EMC circuit.

3) Frames R4 and R5 are evaluated for use on corner-grounded delta networks by

UL standards. (R4 and R5 frames are not to be used on IEC installations of corner grounded networks.)

Note 1: The VAR screw on R1…R3 also connects the EMC (AC) circuit internally within the drive.

Note 2: Failure to remove a metal screw, when indicated in the table above, may result in drive failure.

Note 3: These are the EMC filter and varistor screws and their material in different drive frame sizes.

Frame	EMC filter screws	Ground-to-phase varistor screw
R1…R3	Plastic EMC (DC)	Metal VAR
R4…R9	Plastic EMC (DC), Plastic EMC (AC)	Metal VAR

Guidelines for installing the drive to a TT system

The drive can be installed to a TT system under these conditions:

1. Residual current device has been installed in the supply system.
2. EMC filter screws have been disconnected (= they are plastic screws or there is no screw). Otherwise EMC filter leakage current will cause the residual current device to trip. For R1…R3, the VAR screw must plastic, and for R4…R9, the VAR screw must metal.

Frame size	EMC filter screws	Ground-to-phase varistor screw
R1…R3	Plastic EMC (DC)	Plastic VAR (remove metal VAR screw)
R4…R9	Plastic EMC (DC), Plastic EMC (AC)	Metal VAR

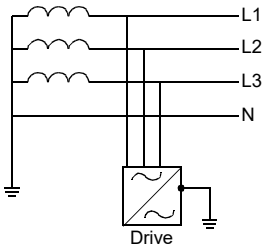

3AXD10000681917

UL NEC

Note:

- ABB does not guarantee the EMC category because the EMC filter screws have been disconnected.
- ABB does not guarantee the functioning of the ground leakage detector built inside the drive.
- In large systems the residual current device can trip without a real reason.

Identifying different types of electrical power systems

To identify the electrical power system type, find out the supply transformer connection. If that is not possible, measure these voltages at the distribution board before you connect power to the drive:

1. input voltage line to line ($U_{L\text{-}L}$)
2. input voltage line 1 to ground ($U_{L1\text{-}G}$)
3. input voltage line 2 to ground ($U_{L2\text{-}G}$)
4. input voltage line 3 to ground ($U_{L3\text{-}G}$).

The line-to-ground voltages in relation to the line-to-line voltage of the electrical power system types are shown below. See the diagrams on page *171*.

$U_{L\text{-}L}$	$U_{L1\text{-}G}$	$U_{L2\text{-}G}$	$U_{L3\text{-}G}$	**Electrical power system type**
X	0.58·X	0.58·X	0.58·X	Symmetrically grounded TN system (TN-S system)
X	1.0·X	1.0·X	0	Corner-grounded delta system (non-symmetrical)
X	0.866·X	0.5·X	0.5·X	Midpoint-grounded delta system (non-symmetrical)
X	Varying level versus time	Varying level versus time	Varying level versus time	IT systems (ungrounded or high-resistance-grounded [>30 ohms]) non-symmetrical
X				TT system (the protective earth connection for the consumer is provided by a local earth electrode, and there is another independently installed at the generator.

UL NEC

Frames R1…R3, disconnecting EMC or varistor screws

Extra screws to configure the drive for different networks are provided in the drive shipment.

To disconnect the internal EMC filter or ground-to-phase varistor, if needed (see page *170*), do as follows.

1. Switch off the power from the drive.
2. Open the front cover, if not already opened, see page *180*.
3. The internal DC EMC filter is disconnected by default with a plastic screw (3a).
4. To disconnect the ground-to-phase varistor, replace the metal varistor screw (4a) with the plastic screw provided in the package, and place the metal screw in the storage place (4b).

R1

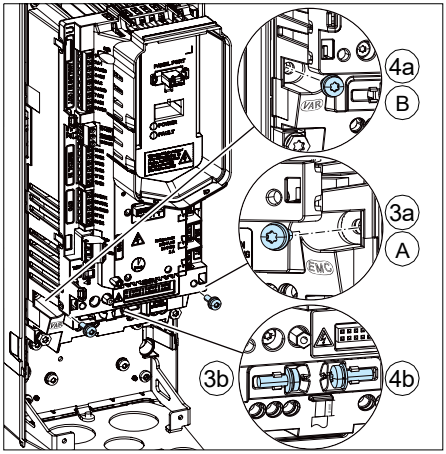

R2

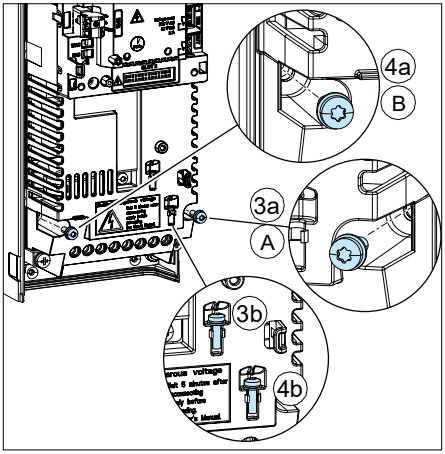

	Screw	Default material
A	EMC (DC)	Plastic
B	VAR	Metal

UL NEC

R3

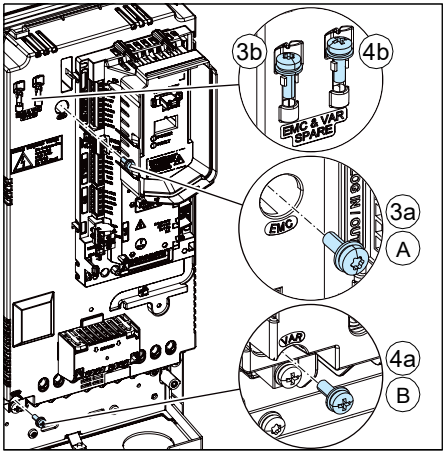

	Screw	Default material
A	EMC (DC)	Plastic
B	VAR	Metal

UL NEC

Frames R4…R9, disconnecting EMC or varistor screws

Extra screws to configure the drive for different networks are provided in the drive shipment.

To disconnect the internal EMC filter or ground-to-phase varistor, if needed (see page *170*), do as follows:

1. Switch off the power from the drive.
2. Open the cover, if not already opened. Frame R4: see page *180*, frame R5: see page *185*, frames R6…R9: see page *79*.
3. To disconnect the internal EMC filters:

   The DC EMC filter is disconnected by default with a plastic screw (3a).
   The AC EMC filter is disconnected by default with a plastic screw (3b).
4. To disconnect the ground-to-phase varistor, replace the metal varistor screw (4) with the plastic screw provided in the package, or just remove the metal screw.

R4

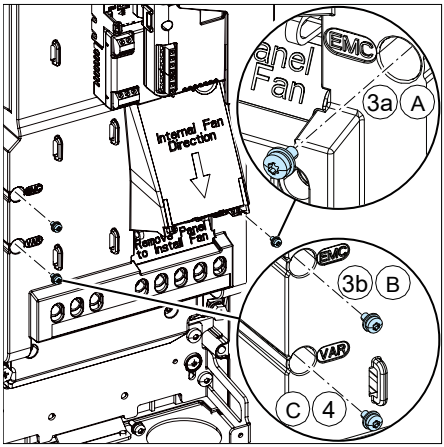

	Screw	Default material
A	EMC (DC)	Plastic
B	EMC (AC)	Plastic
C	VAR	Metal

UL NEC

R5

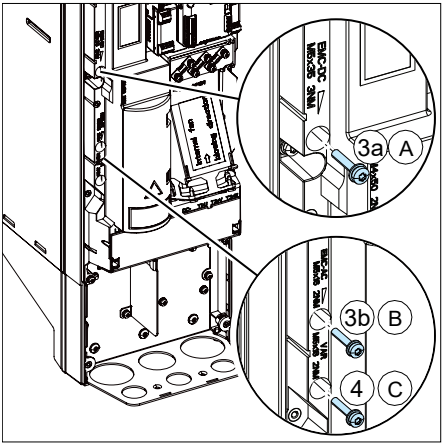

	Screw	Default material
A	EMC-DC	Plastic
B	EMC-AC	Plastic
C	VAR	Metal

R6…R9

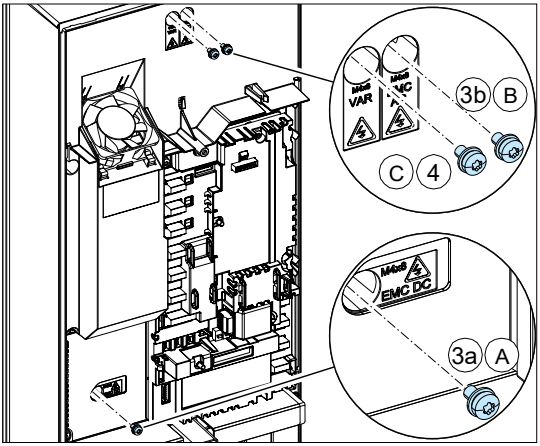

	Screw	Default material
A	EMC DC	Plastic
B	EMC AC	Plastic
C	VAR	Metal

UL NEC

Connecting the power cables

Connection diagram

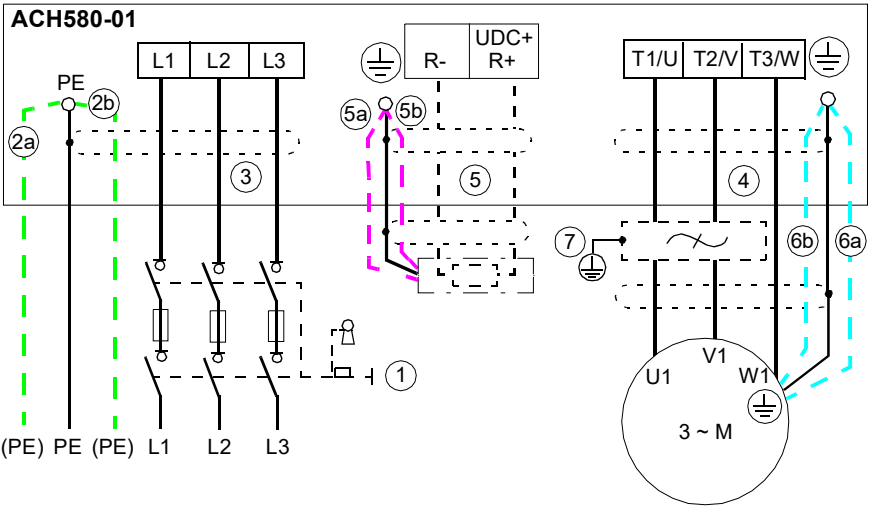

1	For alternatives, see section *Selecting the supply disconnecting device* on page *81*.
2	With a conduit: Use a separate grounding PE cable (2a), or a PE conductor (2b) inside the conduit if the conductivity of the conduit does not meet the requirements for the PE conductor (see page *89*). With a shielded cable: Use a separate grounding PE cable (2a) or a cable with a separate PE conductor (2b) if the conductivity of the shield does not meet the requirements for the PE conductor (see page *89*). **Note:** If the cross-section of the Cu PE conductor is less than 8 AWG, install a second Cu PE conductor of the same cross-sectional area as the original PE conductor. Alternatively, you can use a Cu PE conductor with at least 10 mm^2 cross-section. See page *21*.
3	With the conduit: Make sure of a proper grounding of the conduit at the cable entry. Ground the other end of the conduit and PE conductor (if used) at the distribution board. With a shielded cable: Do a 360-degree grounding if shielded cable is used. Ground the other end of the input cable shield and PE conductor (if used) at the distribution board.
4	With the conduit: Make sure of a proper grounding of the conduit at the cable entry. With a shielded cable: Do a 360-degree grounding of the shield.
5	External brake resistor (if used) With a conduit: Use a separate grounding PE cable (5a), or a PE conductor (5b) inside the conduit if the conductivity of the conduit does not meet the requirements for the PE conductor (see page *89*). With a shielded cable: Use a separate grounding PE cable (5b) or a cable with a separate PE conductor (5b) if the conductivity of the shield does not meet the requirements for the PE conductor (see page *89*).

UL NEC

6	With a conduit: Use a separate grounding cable if the conduit does not meet the requirements for the PE conductor (see page *89*) or there is no grounding conductor inside the conduit. **Note:** ABB prefers the use of a symmetrical shielded motor cable (VFD cable), see the note at the bottom of the table. With a shielded cable: Use a separate grounding cable if the shield does not meet the requirements for the PE conductor (see page *89*) or there is no symmetrically constructed grounding conductor in the cable (see page *93*).
7	d*u*/d*t* or common mode filter (optional), see page *389*.

Note:

With a shielded cable: If there is a symmetrical grounding conductor in the motor cable in addition to the conductive shield, connect the grounding conductor to the grounding terminal at the drive and motor ends.

ABB does not recommend an asymmetrically constructed motor cable or a conduit for motor cabling for motors above 30 kW (see page *89*). Connecting its fourth conductor at the motor end increases bearing currents and causes extra wear.

UL NEC

Connection procedure, frames R1…R4

1. Remove the front cover: Loosen the retaining screw with a T20 Torx screwdriver (1a) and lift the cover from the bottom outwards (1b) and then up (1c).

IP21 (UL Type 1), R1…R2

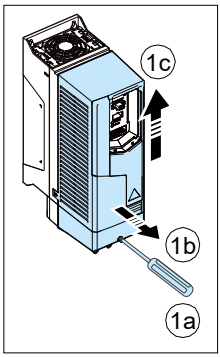

IP21 (UL Type 12), R3…R4

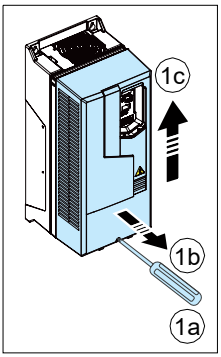

IP55 (UL Type 12), R1…R3

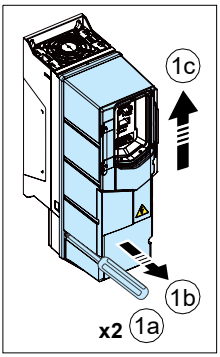

IP55 (UL Type 12), R4

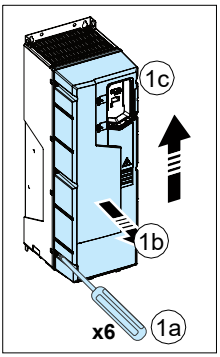

WARNING! If you install the drive on any other system than symmetrically grounded TN-S system, see section *Checking the compatibility with IT (ungrounded), corner-grounded delta, midpoint-grounded delta and TT systems* on page *170* if you have to disconnect the EMC filter and ground-to-phase varistor.

2. Attach the residual voltage warning sticker in the local language.

R1

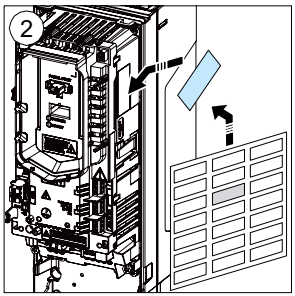

R2

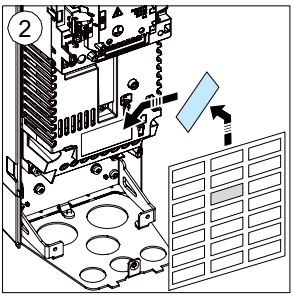

R3…R4

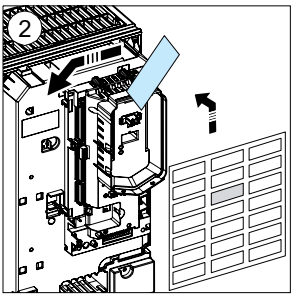

UL NEC

3. Remove the rubber grommets, if present, for the motor and input power cabling, as well as brake resistor cabling, if used. Remove the grommets for the control cabling when you are connecting them.
4. Attach the cable conduits to the cable entry holes in place of the removed grommets.

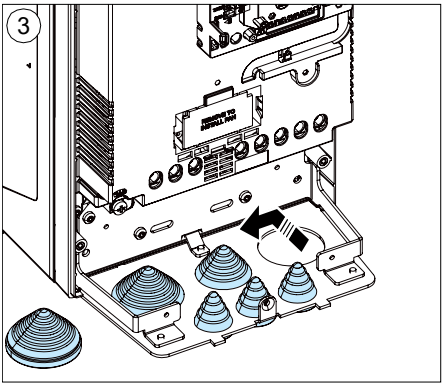

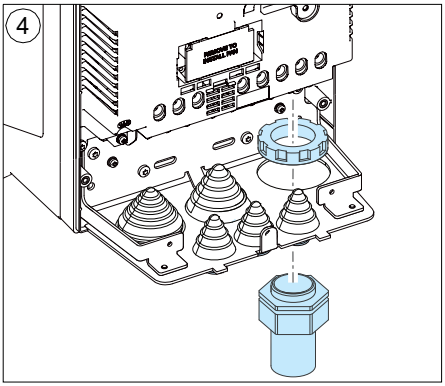

UL NEC

Motor cabling

5. Strip the ends of the conductors.

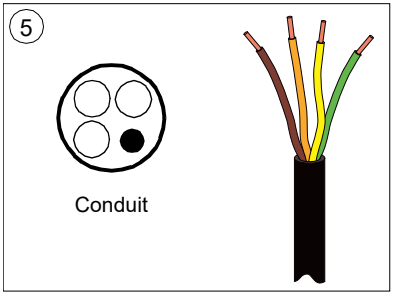

6. Slide the conductors through the conduit.
7. Connect the conductors:
   - Connect the grounding conductor to the grounding terminal. (7a)
   - Connect the phase conductors to the T1/U, T2/V and T3/W terminals. Tighten the screws to the torque given in the table (7b).

R1…R2

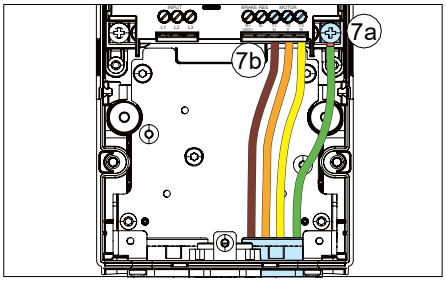

R3

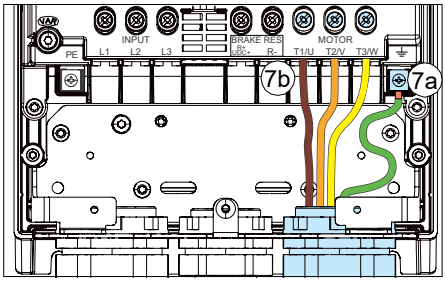

R4

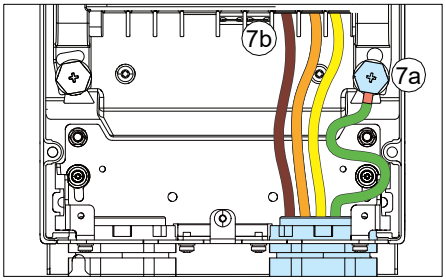

UL NEC

Frame size	R1		R2	
	N·m	lbf·ft	N·m	lbf·ft
T1/U, T2/V, T3/W	1.0	0.7	1.5	1.1
PE, ⏚	1.5	1.1	1.5	1.1

Frame size	R3		R4	
	N·m	lbf·ft	N·m	lbf·ft
T1/U, T2/V, T3/W	3.5	2.6	4.0	3.0
PE, ⏚	1.5	1.1	2.9	2.1

Input power cabling

8. Strip the ends of the conductors as for the motor cabling.
9. Slide the conductors through the conduit.
10. Connect the conductors:
    - Connect the grounding conductor to the grounding terminal. (10a)
    - Connect the phase conductors to the L1, L2 and L3 terminals. Tighten the screws to the torque given in the table. (10b).

R1…R2

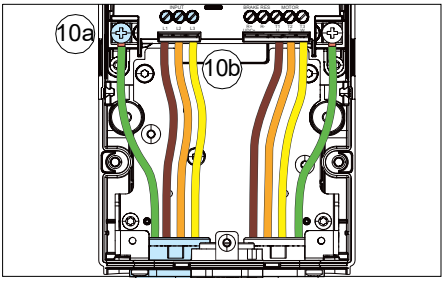

R3

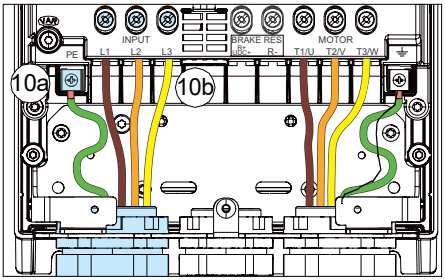

R4

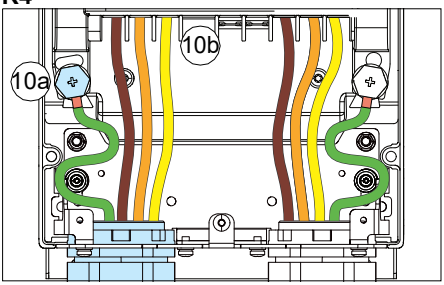

Frame size	R1		R2	
	N·m	lbf·ft	N·m	lbf·ft
L1, L2, L3	1.0	0.7	1.5	1.1
PE, ⏚	1.5	1.1	1.5	1.1

Frame size	R3		R4	
	N·m	lbf·ft	N·m	lbf·ft
L1, L2, L3	3.5	2.6	4.0	3.0
PE, ⏚	1.5	1.1	2.9	2.1

UL NEC

Brake resistor cabling (if used)

Frames R1…R3 only

11. Repeat steps *5*…*6* for the brake resistor conductors. Use only two phase conductors and the ground conductor.

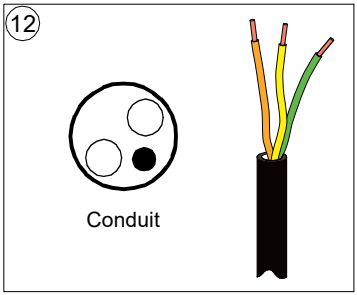

12. Connect the grounding conductor to the grounding terminal (12a) and the other conductors to the R+ and R- terminals (12b). Tighten the screws to the torque given in the table.

R1…R2

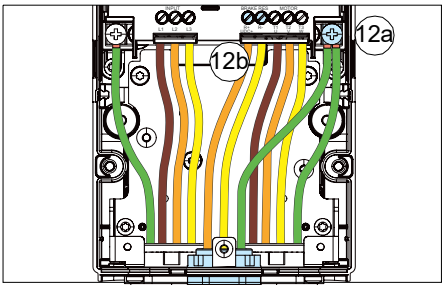

R3…R4

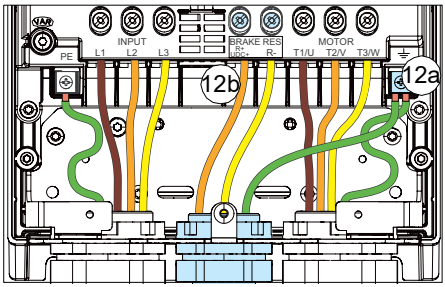

Frame size	R1		R2		R3	
	N·m	lbf·ft	N·m	lbf·ft	N·m	lbf·ft
R+, R-	1.0	0.7	1.5	1.1	3.5	2.6
PE, ⏚	1.5	1.1	1.5	1.1	1.5	1.1

UL NEC

Finalization

Note: Frame R1: You have to install any optional I/O extension module, if used, in options slot 2 at this point. See section *Installing option modules* on page *213*.

13. Secure the conduits outside the unit mechanically.

Connection procedure, frame R5

IP21 (UL Type 1)

1. Remove the module cover: Loosen the retaining screws with a T20 Torx screwdriver (1a) and lift the cover from the bottom outwards (1b) and then up (1c).

   Remove the box cover: Loosen the retaining screws with a screwdriver (1d) and slide the cover downwards (1e).

IP55 (UL Type 12)

1. Remove the front cover: Loosen the retaining screws with a T20 Torx screwdriver (1a) and lift the cover from the bottom outwards (1b) and then up (1c).

IP21 (UL Type 1)

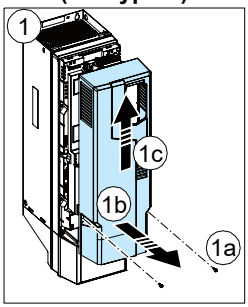

IP21 (UL Type 1)

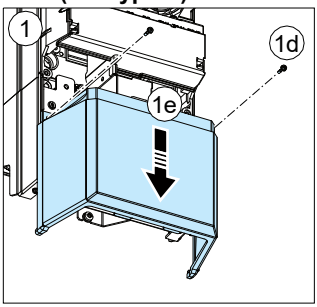

IP55 (UL Type 12)

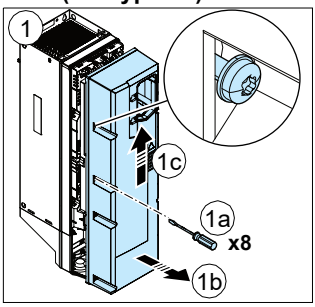

WARNING! If you install the drive on any other system than symmetrically grounded TN-S system, see section *Checking the compatibility with IT (ungrounded), corner-grounded delta, midpoint-grounded delta and TT systems* on page *170* if you have to disconnect the EMC filter and ground-to-phase varistor.

UL NEC

2. Attach the residual voltage warning sticker in the local language next to the control board.

3. Remove the shroud on the power cable terminals by releasing the clips with a screwdriver (3a) and pulling the shroud out (3b).

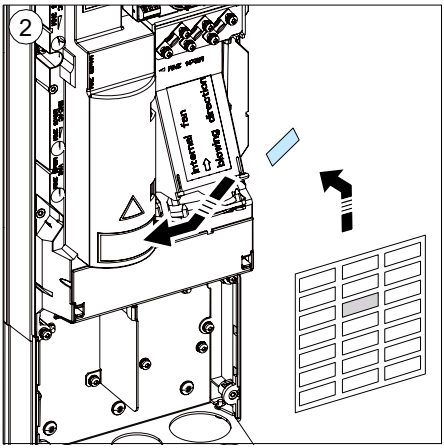

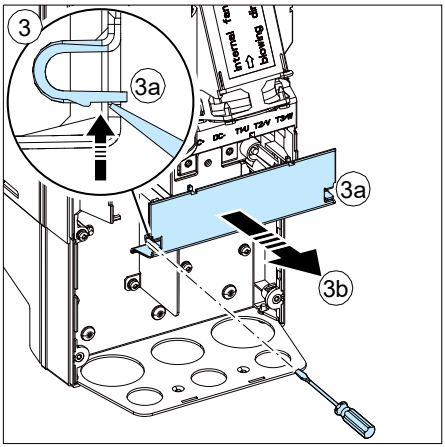

4. Remove the rubber grommets, if present, for the motor and input power cabling. Remove the grommets for the control cabling when you are connecting them.

5. Attach the cable conduits for the motor and input cabling to the cable entry holes.

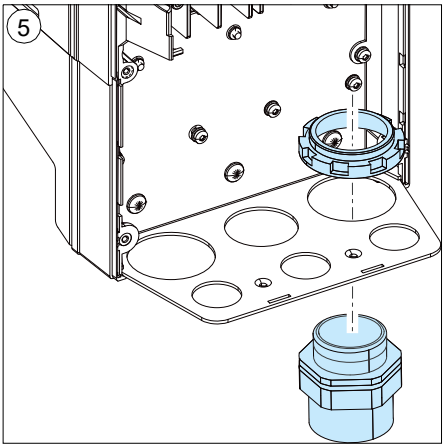

UL NEC

Motor cabling

6. Strip the ends of the conductors.

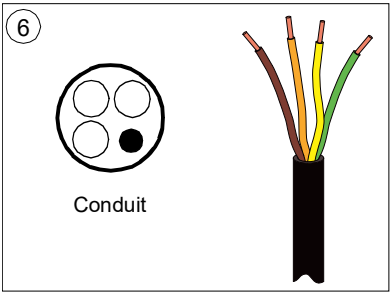

7. Slide the conductors through the conduit.
8. Connect the conductors:
   - Connect the grounding conductor to the grounding terminal (8a).
   - Connect the phase conductors to the T1/U, T2/V and T3/W terminals (8b). Tighten the screws to the torque given in the table.

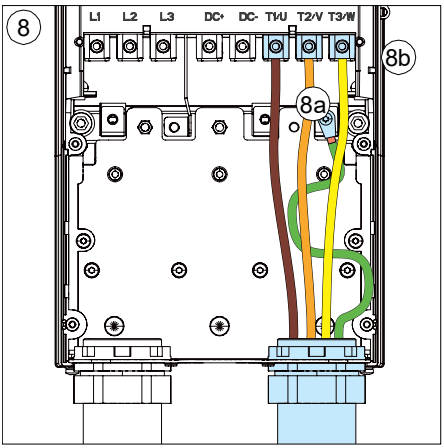

Frame size	T1/U, T2/V, T3/W		PE, ⏚		
	N·m	lbf·ft	M	N·m	lbf·ft
R5	5.6	4.1	M5	2.2	1.6

UL NEC

Input power cabling

9. Repeat steps *6*…*7* for the conductors.

10. Connect the conductors as for the motor cabling. Use terminals L1, L2 and L3. Tighten the screws to the torque given in the table.

11. Install the cable box plate. Position the plate (11a) and tighten the screw (11b).

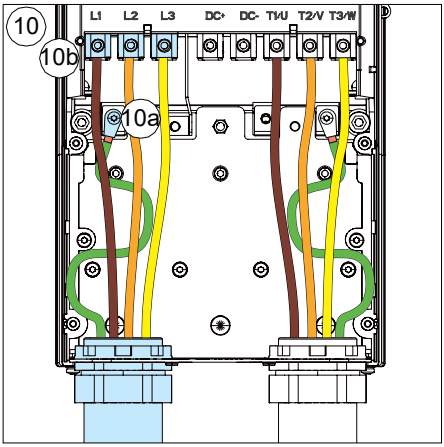

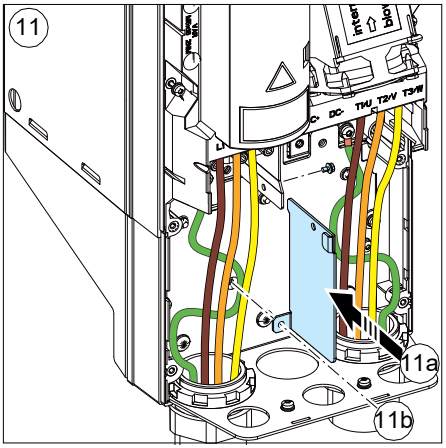

Frame size	L1, L2, L3		PE, ⏚		
	N·m	lbf·ft	M	N·m	lbf·ft
R5	5.6	4.1	M5	2.2	1.6

12. Reinstall the shroud on the power terminals by putting the tabs at the top of the shroud in their counterparts on the drive frame (12a) and then pressing the shroud in place (12b).

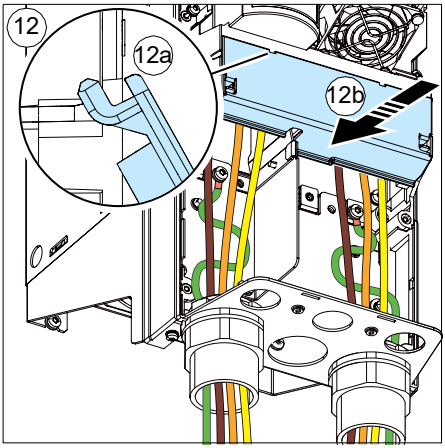

UL NEC

Finalization

13. Secure the conduits outside the unit mechanically.

Connection procedure, frames R6…R9

WARNING! If you install the drive on any other system than symmetrically grounded TN-S system, see section *Checking the compatibility with IT (ungrounded), corner-grounded delta, midpoint-grounded delta and TT systems* on page *170* if you have to disconnect the EMC filter and ground-to-phase varistor.

1. Attach the residual voltage warning sticker in the local language next to the control board.
2. Remove the side plates of the cable box: Remove the retaining screws (2a) and slide the walls out (2b).

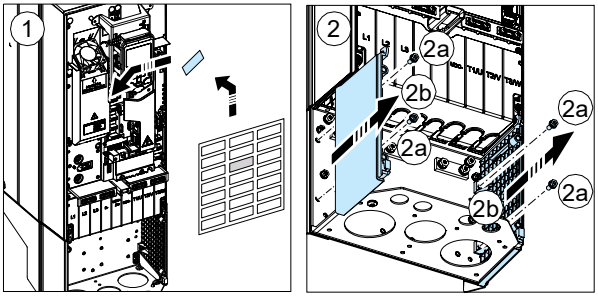

3. Remove the shroud on the power cable terminals by releasing the clips with a screwdriver (3a) and pulling the shroud out (3b).
4. Knock out holes in the shroud for the cabling to be installed.
5. Frames R8…R9: If you install parallel cabling, also knock out holes in the lower shroud.

R6…R9 **R6…R9** **R8…R9**

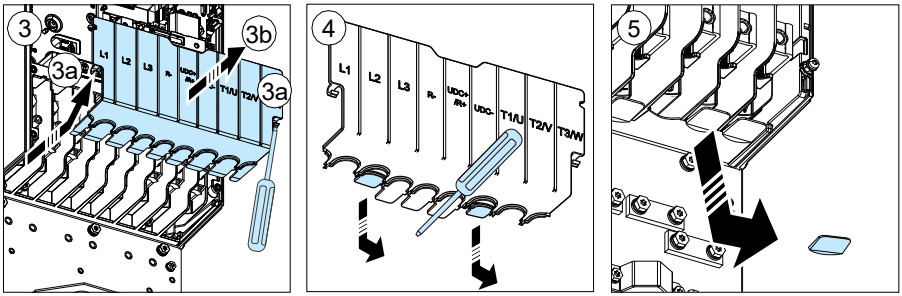

UL NEC

6. Remove the rubber grommets, if present, for the motor and input power cabling. Remove the grommets for the control cabling when you are connecting them.

7. Attach the cable conduits for the motor and input cabling to the cable entry holes.

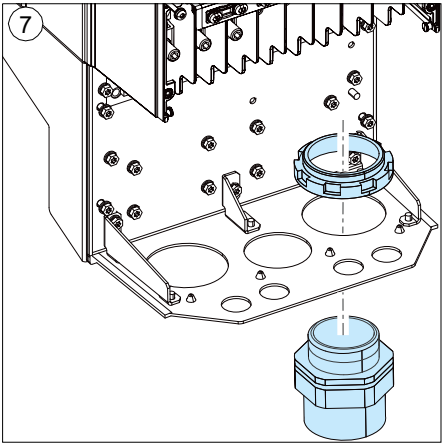

UL NEC

Motor cabling

8. Strip the ends of the conductors.

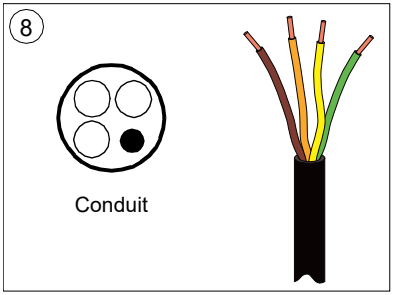

9. Slide the conductors through the conduit.

10. Connect the conductors:
    - Connect the grounding conductor to the grounding terminal (10a).
    - Connect the phase conductors to terminals T1/U, T2/V and T3/W. Tighten the screws to the torque given in the table (10b).

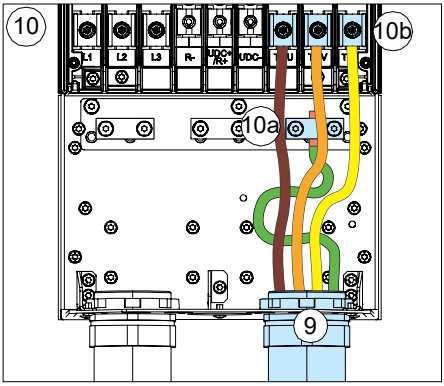

Frame size	L1, L2, L3, T1/U, T2/V, T3/W		PE, ⏚	
	N·m	lbf·ft	N·m	N·m
R6	30	22.1	9.8	7.2
R7	40	29.5	9.8	7.2
R8	40	29.5	9.8	7.2
R9	70	51.6	9.8	7.2

UL NEC

Note 1 for frames R8…R9: If you connect only one conductor to the connector, ABB recommends that you put it under the upper pressure plate. If you use parallel power cabling, put the first conductor under the lower pressure plate and the second under the upper one.

Note 2 for frames R8…R9: The connectors are detachable but ABB does not recommend that you detach them. If you do, detach and reinstall the connectors as described in section *Detaching and reinstalling the connectors* on page *193*.

Input power cabling

11. Repeat steps *8*…*10* for the conductors. Use terminals L1, L2 and L3.

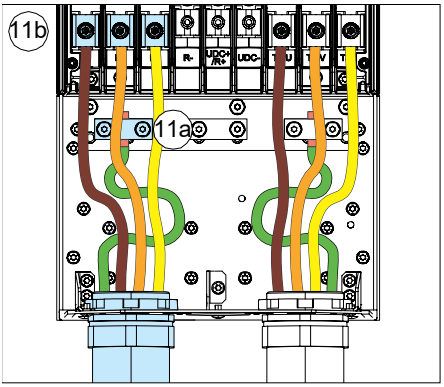

Frame size	L1, L2, L3, T1/U, T2/V, T3/W		PE, ⏚	
	N·m	lbf·ft	N·m	N·m
R6	30	22.1	9.8	7.2
R7	40	29.5	9.8	7.2
R8	40	29.5	9.8	7.2
R9	70	51.6	9.8	7.2

Detaching and reinstalling the connectors

This is possible but not recommended.

Terminals T1/U, T2/V and T3/W

- Remove the nut that attaches the connector to its busbar.
- Put the conductor under the connector pressure plate and pre-tighten the conductor.
- Put the connector back to its busbar. Start the nut, and turn it at least two rotations by hand.

WARNING! Before using tools, make sure that the nut/screw is not cross-threading. Cross-threading will damage the drive and cause danger.

- Tighten the nut to a torque of 30 N·m (22 lbf·ft).
- Tighten the conductor(s) to 40 N·m (30 lbf·ft) for frame R8 or to 70 N·m (52 lbf·ft) for frame R9.

UL NEC

Terminals L1, L2 and L3

- Remove the combi screw that attaches the connector to its terminal post, and pull the connector off.
- Put the conductor under the connector pressure plate and pre-tighten the conductor.
- Put the connector back onto the terminal post. Start the combi screw, and turn it at least two rotations by hand.

WARNING! Before using tools, make sure that the nut/screw is not cross-threading. Cross-threading will damage the drive and cause danger.

- Tighten the combi screw to a torque of 30 N·m (22 lbf·ft).
- Tighten the conductor(s) to 40 N·m (30 lbf·ft) for frame R8 or to 70 N·m (52 lbf·ft) for frame R9.

12. Frames R8…R9: Connect the parallel motor (11a) and input power (11b) cabling conductors, if used. Repeat steps *8*...*11*.

R8…R9

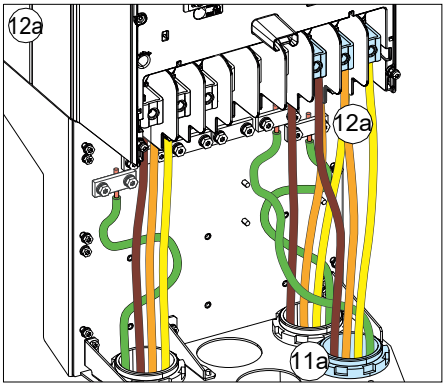

R8…R9

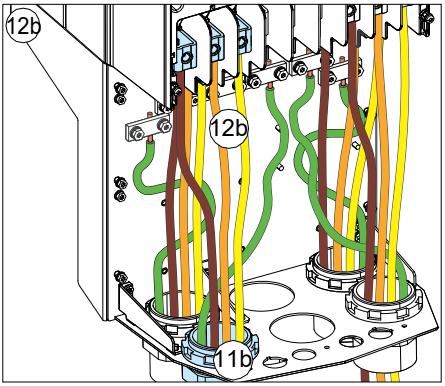

13. Reinstall the shroud on the power terminals.

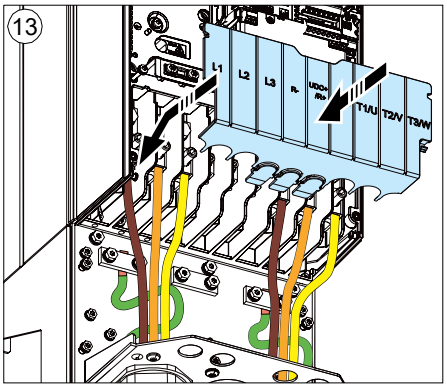

UL NEC

14. Secure the conduits outside the unit mechanically.

DC connection

The UDC+ and UDC- terminals (as standard in frames R4…R9) are for using external brake chopper units.

UL NEC

Connecting the control cables

See section *Default I/O connection diagram (HVAC default configuration)* on page *197* for the default I/O connections of the HVAC default configuration.

Connect the cables as described under *Control cable connection procedure R1…R9* on page *207*.

UL
NEC

Default I/O connection diagram (HVAC default configuration)

R1…R5

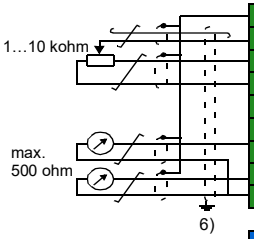

X1	Reference voltage and analog inputs and outputs	
1	SCR	Signal cable shield (screen)
2	AI1	**Output frequency/speed reference**: 0…10 V[1)]
3	AGND	Analog input circuit common
4	+10V	Reference voltage 10 V DC
5	AI2	**Actual feedback:** 0…20 mA[1)]
6	AGND	Analog input circuit common
7	AO1	**Output frequency:** 0…10 V
8	AO2	**Motor current:** 0…20 mA
9	AGND	Analog output circuit common
X2 & X3	Aux. voltage output and programmable digital inputs	
10	+24V	Aux. voltage output +24 V DC, max. 250 mA[2)]
11	DGND	Aux. voltage output common
12	DCOM	Digital input common for all
13	DI1	**Stop (0) / Start (1)**
14	DI2	Not configured
15	DI3	**Constant frequency/speed selection**[3)]
16	DI4	**Start interlock 1 (1 = allow start)**
17	DI5	Not configured
18	DI6	Not configured
X6, X7, X8	Relay outputs	
Damper actuator 19	RO1C	**Damper control** 250 V AC / 30 V DC 2 A
20	RO1A	
21	RO1B	
Run status 22	RO2C	**Running** 250 V AC / 30 V DC 2 A
23	RO2A	
24	RO2B	
Fault status 25	RO3C	**Fault (-1)** 250 V AC / 30 V DC 2 A
26	RO3A	
27	RO3B	
X5	Embedded fieldbus	
29	B+	Embedded fieldbus, EFB (EIA-485)
30	A-	
31	DGND	
S4	TERM	Termination switch
S5	BIAS	Bias resistors switch
X4	Safe torque off	
34	OUT1	Safe torque off. Factory connection. Both circuits must be closed for the drive to start. See chapter *Safe torque off function* on page *345*.
35	OUT2	
36	SGND	
37	IN1	
38	IN2	

See the notes on page *199*.

Total load capacity of the Auxiliary voltage output +24V (X2:10) is 6.0 W (250 mA / 24 V DC).

Digital inputs DI1…DI5also support 10 to 24 V AC.

Wire sizes:

0.2…2.5 mm^2 (24…14 AWG): Terminals +24V, DGND, DCOM, B+, A-, DGND, Ext. 24V

0.14…1.5 mm^2 (26…16 AWG): Terminals DI, AI, AO, AGND, RO, STO

Tightening torques: 0.5…0.6 N·m (0.4 lbf·ft)

R6…R9

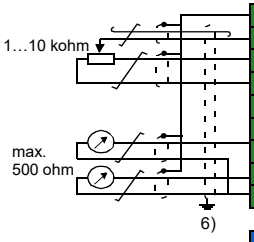

X1	Reference voltage and analog inputs and outputs	
1	SCR	Signal cable shield (screen)
2	AI1	**Output frequency/speed reference**: 0…10 V[1)]
3	AGND	Analog input circuit common
4	+10V	Reference voltage 10 V DC
5	AI2	**Actual feedback:** 0…20 mA[1)]
6	AGND	Analog input circuit common
7	AO1	**Output frequency:** 0…10 V
8	AO2	**Motor current:** 0…20 mA
9	AGND	Analog output circuit common
X2 & X3	Aux. voltage output and programmable digital inputs	
10	+24V	Aux. voltage output +24 V DC, max. 250 mA[2)]
11	DGND	Aux. voltage output common
12	DCOM	Digital input common for all
13	DI1	**Stop (0) / Start (1)**
14	DI2	Not configured
15	DI3	**Constant frequency/speed selection**[3)]
16	DI4	**Start interlock 1 (1 = allow start)**
17	DI5	Not configured
18	DI6	Not configured
X6, X7, X8	Relay outputs	
19	RO1C	**Damper control** 250 V AC / 30 V DC 2 A
20	RO1A	
21	RO1B	
22	RO2C	**Running** 250 V AC / 30 V DC 2 A
23	RO2A	
24	RO2B	
25	RO3C	**Fault (-1)** 250 V AC / 30 V DC 2 A
26	RO3A	
27	RO3B	
X5	Embedded fieldbus	
29	B+	Embedded fieldbus, EFB (EIA-485)
30	A-	
31	DGND	
S4	TERM	Termination switch
S5	BIAS	Bias resistors switch
X4	Safe torque off	
34	OUT1	Safe torque off. Factory connection. Both circuits must be closed for the drive to start. See chapter *Safe torque off function* on page *345*.
35	OUT2	
36	SGND	
37	IN1	
38	IN2	
X10	24 V AC/DC	
40	24 V AC/DC+ in	Ext. 24V AC/DC input to power up the control unit when the main supply is disconnected.
41	24 V AC/DC- in	

Damper actuator

Run status

Fault status

UL NEC

See the notes on page *199*.

Total load capacity of the Auxiliary voltage output +24V (X2:10) is 6.0 W (250 mA / 24 V DC).

Digital inputs DI1…DI5 also support 10 to 24 V AC.

Wire sizes: 0.14…2.5 mm^2 (26…16 AWG): All terminals

Tightening torques: 0.5…0.6 N·m (0.4 lbf·ft)

Notes:

1) Current [0(4)…20 mA, R_{in} = 100 ohm] or voltage [0(2)…10 V, R_{in} > 200 kohm]. Change of setting requires changing the corresponding parameter.

2) Total load capacity of the Auxiliary voltage output +24V (X2:10) is 6.0 W (250 mA / 24 V) minus the power taken by the option modules installed on the board.

3) In scalar control: See **Menu > Primary settings > Start, stop, reference > Constant speeds / constant frequencies** or parameter group 28 Frequency reference chain.
In vector control: See **Menu > Primary setting > Start, stop, reference > Constant speeds / constant frequencies** or parameter group 22 Speed reference selection.

DI3	Operation/Parameter	
	Scalar control (default)	**Vector control**
0	Set frequency through AI1	Set speed through AI1
1	28.26 Constant frequency 1	22.26 Constant speed 1

4) Connected with jumpers at the factory.

5) Use shielded twisted-pair cables for digital signals.

6) Ground the outer shield of the cable 360 degrees under the grounding clamp on the grounding shelf for the control cables.

Further information on the usage of the connectors and switches is given in the sections below. See also section *Control connection data* on page *289*.

UL NEC

Switches

Switch	Description	Position	
S4 (TERM)	EFB link termination. Must be set to the terminated (ON) position when the drive is the first or last unit on the link.	ON TERM	Bus not terminated (**default**)
		ON TERM	Bus terminated
S5 (BIAS)	Activates on the biasing voltages to the bus. One (and only one) device, preferably at the end of the bus must have the bias on.	ON BIAS	Bias off (**default**)
		ON BIAS	Bias on

UL NEC

PNP configuration for digital inputs

Internal and external +24 V power supply connections for PNP configuration are shown in the figure below.

Internal +24 V power supply

PNP connection (source)

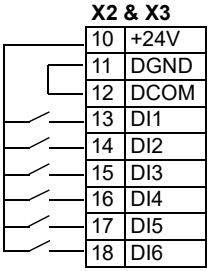

External +24 V power supply

PNP connection (source)

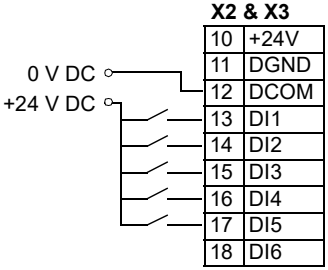

Note: DI6 is not supported in the PNP configuration with external +24 V power supply.

WARNING! Do not connect the +24 V AC cable to the control board ground when the control board is powered using an external 24 V AC supply.

UL NEC

NPN configuration for digital inputs

Internal and external +24 V power supply connections for NPN configuration are shown in the figure below.

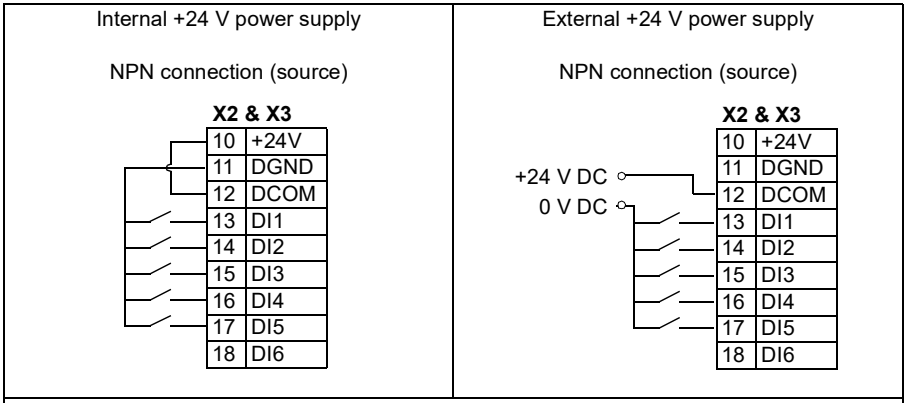

Note: DI6 is not supported in the NPN configuration.

WARNING! Do not connect the +24 V AC cable to the control board ground when the control board is powered using an external 24 V AC supply.

UL NEC

Connection for obtaining 0…10 V from analog output 2 (AO2)

To obtain 0…10 V from analog output AO2, connect a 500 ohm resistor (or two 1 kohm resistors in parallel) between the analog output 2 AO2 and analog common ground AGND.

Examples are shown in the figure below.

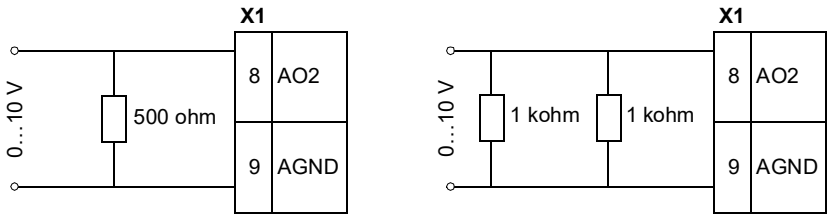

8	AO2. Analog output 2. Default output 0…20 mA.
9	AGND. Analog common ground. Internally connected to chassis through a 2 Mohm resistor.

UL NEC

Connection examples of two-wire and three-wire sensors

Note: Maximum capability of the auxiliary 24 V DC (250 mA) output must not be exceeded.

Two-wire sensor/transmitter

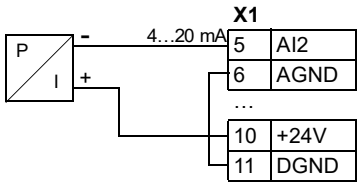

5	AI2	Process actual value measurement or reference, 0(4)…20 mA, R_{in} = 100 ohm
6	AGND	
10	+24V	Auxiliary voltage output, non-isolated, +24 V DC, max. 250 mA
11	DGND	

Three-wire sensor/transmitter

Note: The sensor is supplied through its current output and the drive feeds the supply voltage (+24 V DC). Thus the output signal must be 4…20 mA, not 0…20 mA.

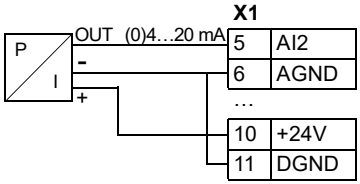

5	AI2	Process actual value measurement or reference, 0(4)…20 mA, R_{in} = 100 ohm
6	AGND	
10	+24V	Auxiliary voltage output, non-isolated, +24 V DC, max. 250 mA
11	DGND	

UL NEC

DI5 as frequency input

For setting the parameters for the digital frequency input, see *ACH580 HVAC control program firmware manual* (3AXD50000027537 [English]).

DI6 as PTC input

If DI6 is used as a PTC input, see *ACH580 HVAC control program firmware manual* (3AXD50000027537 [English]) for how to set parameters accordingly.

Note: If DI6 is used as PTC input, the wiring and the PTC sensor need to be double isolated. Otherwise the CMOD-02 I/O extension module must be used.

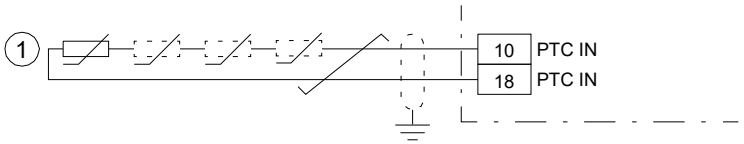

1	One to six PTC thermistors connected in series.

UL NEC

AI1 and AI2 as Pt100, Pt1000, Ni1000, KTY83 and KTY84 sensor inputs (X1)

One, two or three Pt100 sensors; one, two or three Pt1000 sensors; or one Ni1000, KTY83 or KTY84 sensor for motor temperature measurement can be connected between an analog input and output as shown below. Do not connect both ends of the cable shields directly to ground. If a capacitor cannot be used at one end, leave that end of the shield unconnected.

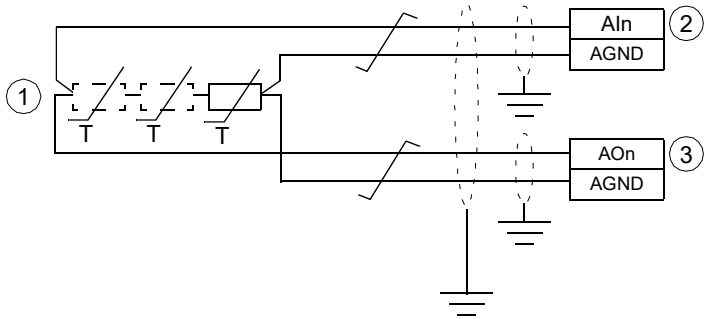

1	1…3 × (Pt100 or Pt1000) or 1 × (Ni1000 or KTY83 or KTY84)
2	Select the input type to voltage for analog input AI1 or AI2 with parameters. Set the appropriate analog input unit to V (volt) in parameter group 12 Standard AI.
3	Select the excitation mode in parameter group 13 Standard AO.

WARNING! As the inputs pictured above are not insulated according to IEC 60664, the connection of the motor temperature sensor requires double or reinforced insulation between motor live parts and the sensor. If the assembly does not fulfill the requirement, the I/O board terminals must be protected against contact and must not be connected to other equipment or the temperature sensor must be isolated from the I/O terminals.

Safe torque off (X4)

UL NEC

For the drive to start, both connections (+24 V DC to IN1 and +24 V DC to IN2) must be closed. By default, the terminal block has jumpers to close the circuit. Remove the jumpers before connecting an external Safe torque off circuitry to the drive. See chapter *Safe torque off function* on page *345*.

Note: Only 24 V DC can be used for STO. Only PNP input configuration can be used.

Control cable connection procedure R1…R9

WARNING! Obey the instructions in chapter *Safety instructions* on page *15*. If you ignore them, injury or death, or damage to the equipment can occur.

1. Stop the drive and do the steps in section *Precautions before electrical work* on page *18* before you start the work.
2. Remove the front cover(s) if not already removed. See page *180* (R1…R4), page *185* (R5) or page *79* (R6…R9).

Analog signals
The figures for frames R1…R2 and R3 (page *209*), R4 (page *210*), R5 (page *211*) and R6…R9 (page *212*) show an example of connecting a cable. Make the connections according to the default configuration.

3. Remove the rubber grommets from the cable entry for the cables to be connected. Attach cable conduits to the empty cable entry holes. Slide the cables through the cable conduits.
4. Frames R5…R9: Secure the cables mechanically at the clamps below the control board.
   Ground the pair-cable shields and grounding wire at the SCR terminal, or either, you may ground the shield at the source of the signal, but do not ground it at both the source of the signal and the SCR terminal.
5. Route the cable as shown in the figures on pages *209* (R1…R2 and R3), *210* (R4), *211* (R5) or *212* (R6…R9).
6. Connect the conductors to the appropriate terminals of the control board and tighten to 0.5…0.6 N·m (0.4 lbf·ft).

Digital signals
The figures for frames R1…R2 and R3 (page *209*), R4 (page *210*), R5 (page *211*) and R6…R9 (page *212*) show an example of connecting a cable. Make the connections according to the default configuration.

UL NEC

7. Remove the rubber grommets from the cable entry for the cables to be connected. Attach cable conduits to the empty cable entry holes. Slide the cables through the cable conduits.
8. Frames R5…R9: Secure the cables mechanically at the clamps below the control board.
   If you use double-shielded cables, ground the pair-cable shields and grounding wire at the SCR terminal.
9. Route the cable as shown in the figures on pages *209* (R1…R2 and R3), *210* (R4), *211* (R5) or *212* (R6…R9).

10. Connect the conductors to the appropriate terminals of the control board and tighten to 0.5…0.6 N·m (0.4 lbf·ft).

11. Tie all control cables to the provided cable tie mounts.

Note:

- Leave the other ends of the control cable shields unconnected or ground them indirectly via a high-frequency capacitor with a few nanofarads, eg, 3.3 nF / 630 V. The shield can also be grounded directly at both ends if they are *in the same ground line* with no significant voltage drop between the end points.
- Keep any signal wire pairs twisted as close to the terminals as possible. Twisting the wire with its return wire reduces disturbances caused by inductive coupling.

UL NEC

R1…R2

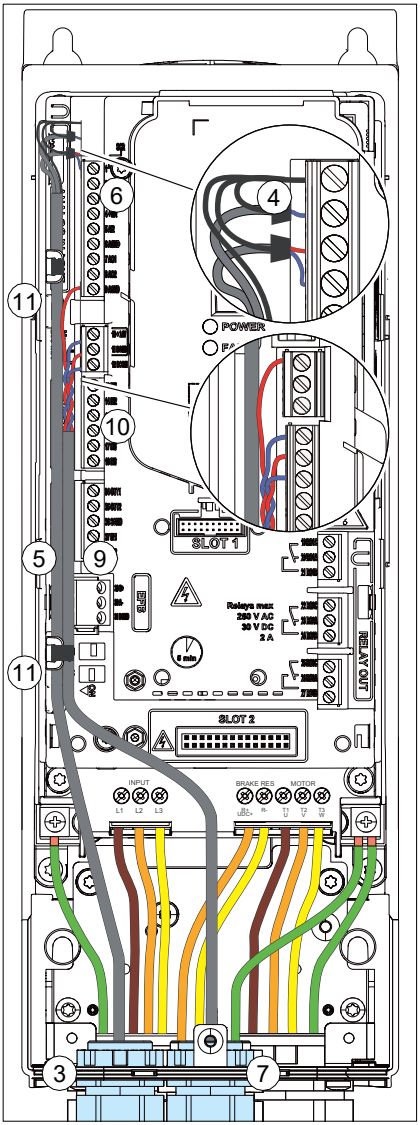

R1…R2: 0.4 lbf·ft

R3

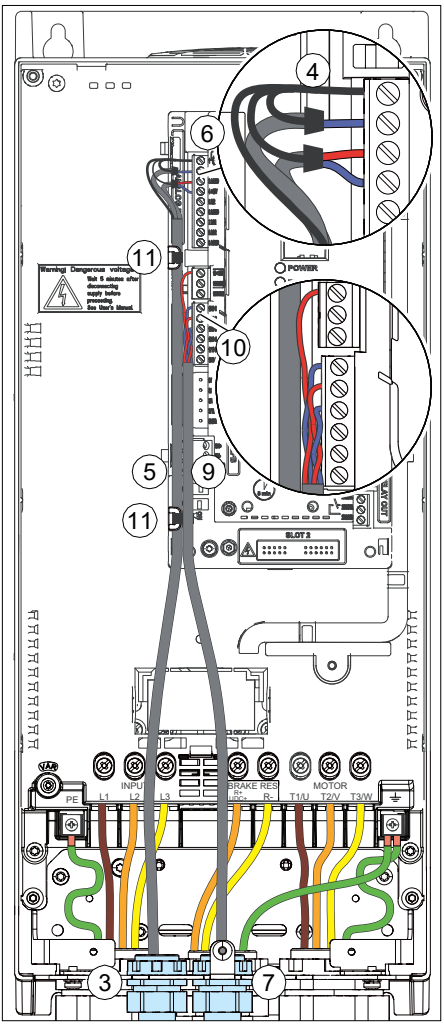

R3: 0.4 lbf·ft

UL NEC

R4

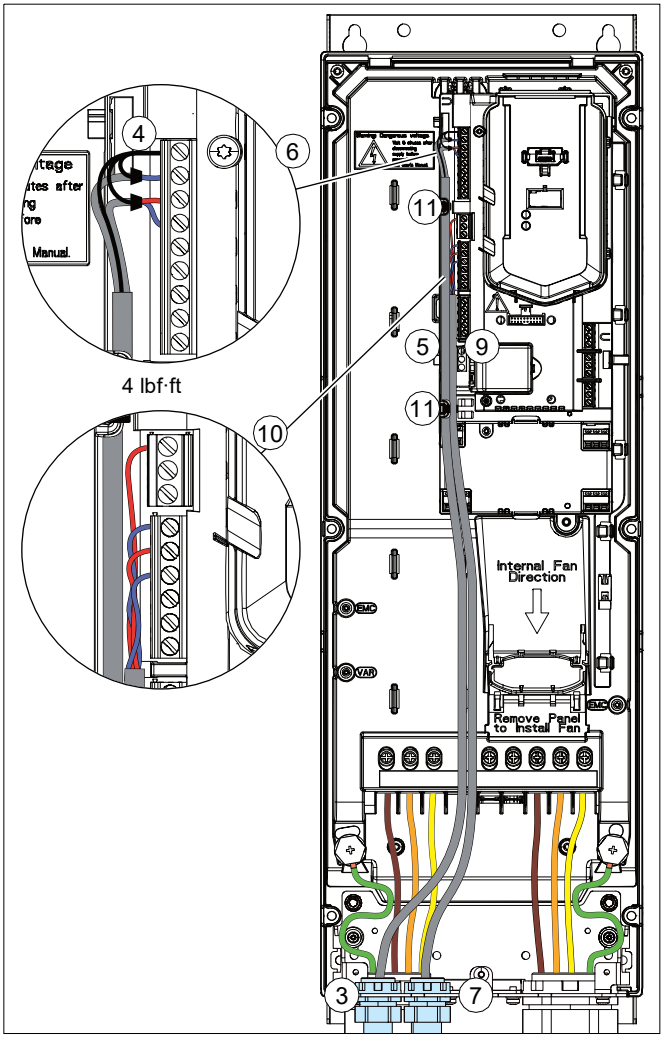
4
6
11
5
9
11
10
4 lbf·ft
Internal Fan Direction
EMC
VAR
EMC
Remove Panel to Install Fan
3
7

UL NEC

R5

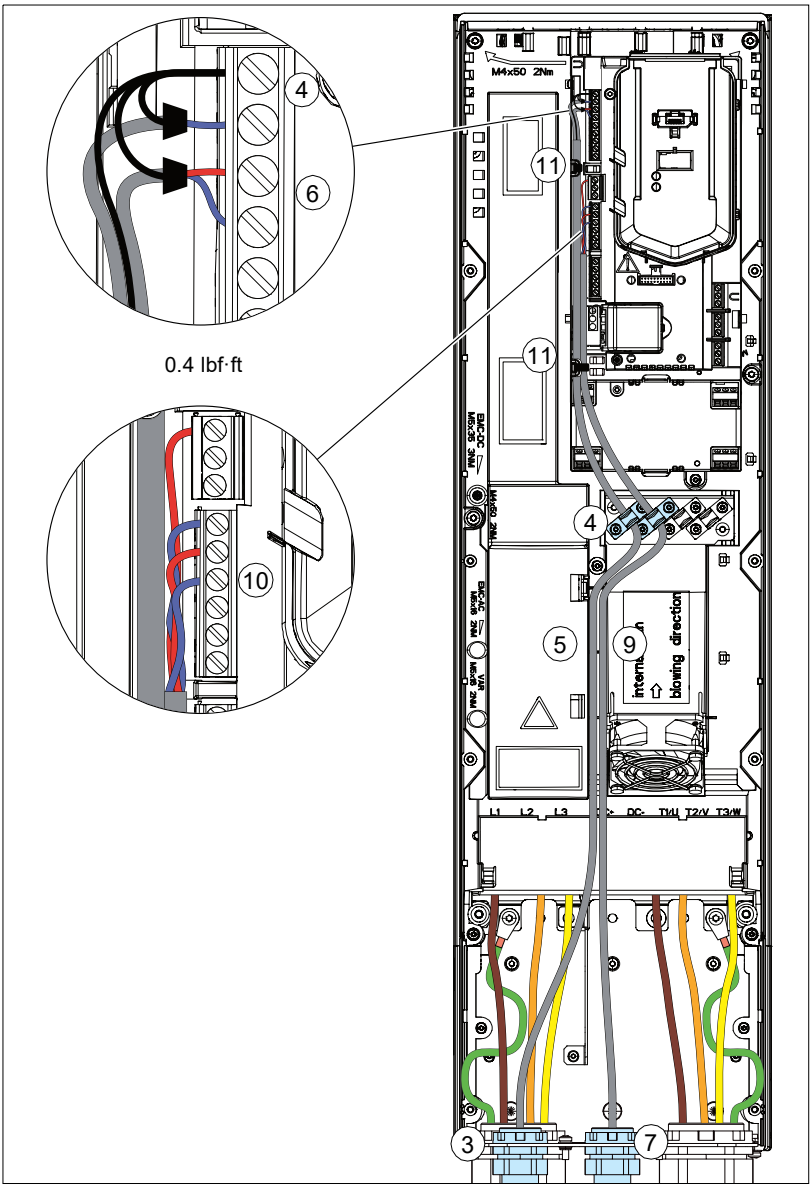

UL NEC

R6…R9

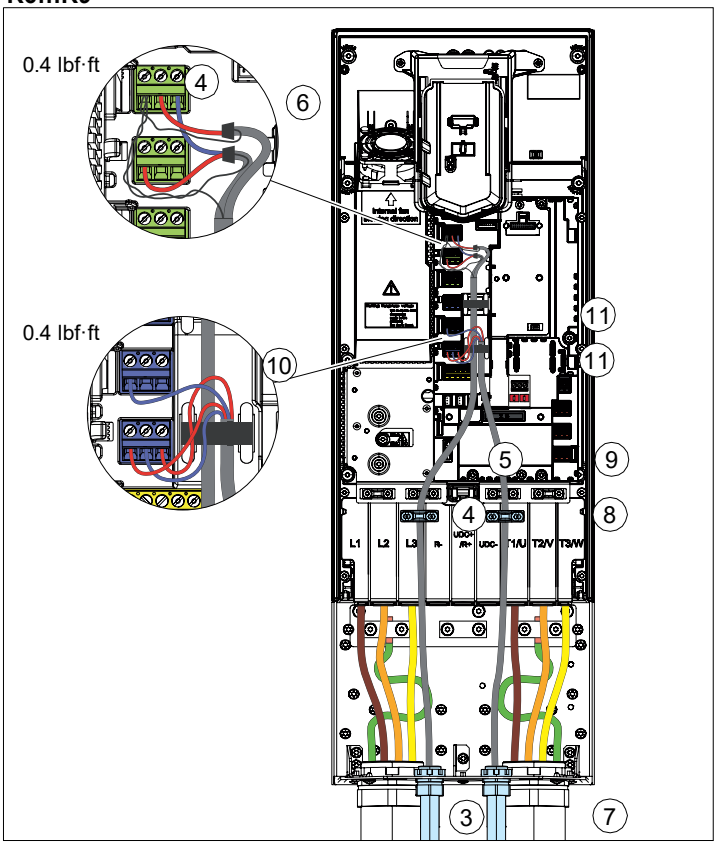
0.4 lbf·ft
4
6
0.4 lbf·ft
10
11
11
5
9
4
8
L1
L2
L3
R-
UDC+
/R+
UDC-
T1/U
T2/V
T3/W
3
7

UL
NEC

Installing option modules

Note: In North American deliveries, options may also be ordered as factory installed.

Note: If you will install the FPBA-01 module, see section *FPBA-01 PROFIBUS DP adapter module connectors* on page *101* for suitable connector types.

Mechanical installation of option modules

See section *Overview of power and control connections* page *43* for the available slots for each module. Install the option modules as follows:

WARNING! Obey the instructions in chapter *Safety instructions* on page *15*. If you ignore them, injury or death, or damage to the equipment can occur.

Note: Slot 2 in frames R1…R5 is at U_{DC} potential. You must disconnect power supplies before installing or removing an I/O extension module.

Stop the drive and do the steps in section *Precautions before electrical work* on page *18* before you start the work.

1. Remove the front cover(s) if not already removed. See page *180* (R1…R4), page *185* (R5) or page *79* (R6…R9).

The figures for frames R1…R5 (page *214*) and R6…R9 (page *215*) show an example of installing option modules.

Option slot 2 (I/O extension modules)

2. Frame R1 only: Install the option mounting.
3. Put the module carefully into its position on the control board.
4. Tighten the mounting screw.
5. Tighten the grounding screw (CHASSIS). **Note:** The screw grounds the module. It is necessary for fulfilling the EMC requirements and for proper operation of the module.

Note: Frame R1: The module in option slot 2 covers the power terminals. Do not install a module in option slot 2 before you have installed the power cables.

Option slot 1 (fieldbus adapter modules)

6. Put the module carefully into its position on the control board.
7. Tighten the mounting screw (CHASSIS). **Note:** The screw tightens the connections and grounds the module. It is necessary for fulfilling the EMC requirements and for proper operation of the module.

R1…R2

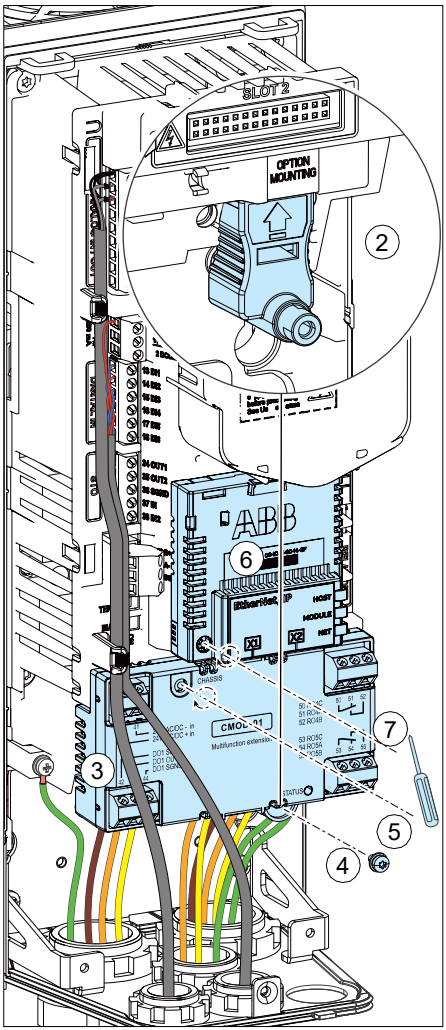

R3…R5

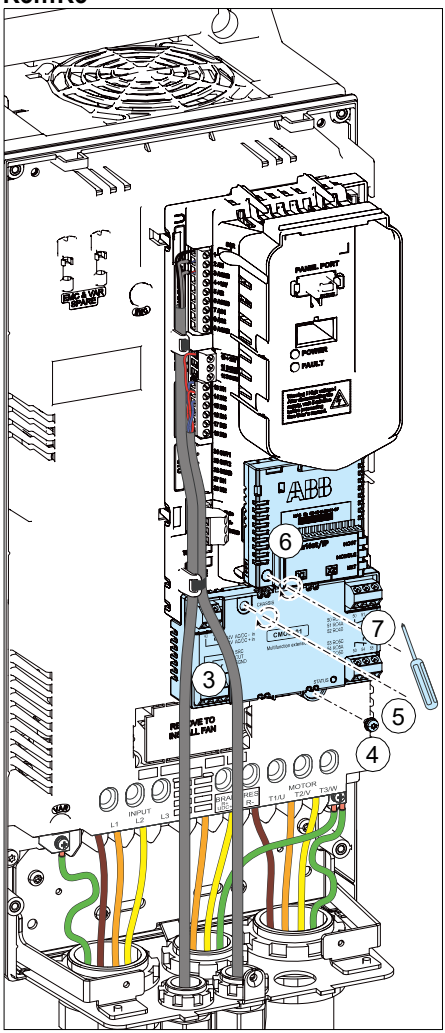

UL NEC

R6…R9

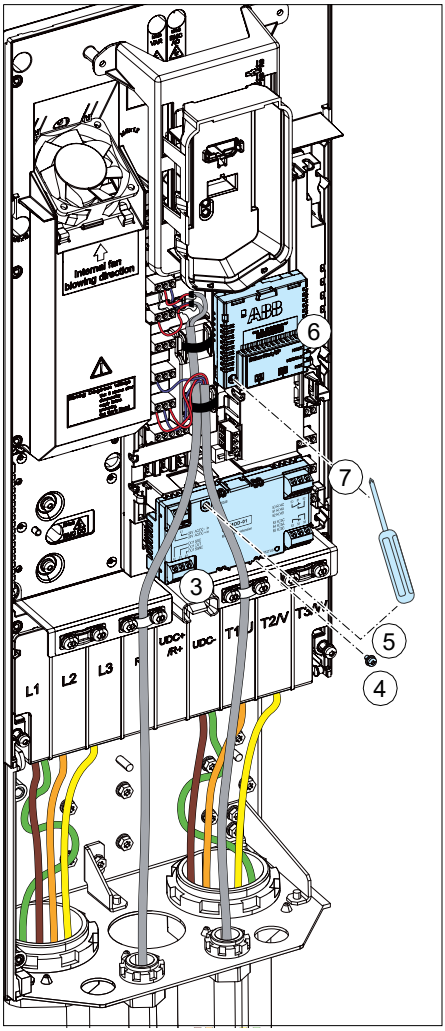

UL NEC

Wiring the modules

For the optional I/O extension modules CHDI-01, CMOD-01 and CMOD-02, see chapter *Optional I/O extension modules* on page *363* for specific installation and wiring instructions. For other option module, for example, CPTC-02, see the appropriate option module.

Reinstalling grommets

UL Type 12: To maintain UL Type 12, reinstall grommets (top of the grommets downwards) to all cable entry holes without conduits.

UL
NEC

Reinstalling covers

Reinstalling cover, frames R1…R4

1. Reinstall the cover: Put the tabs on the cover top in their counterparts on the housing (1a) and the press the cover (1b).
2. Tighten the retaining screw at the bottom with a T20 Torx screwdriver.

IP21 (UL Type 1) R1…R2

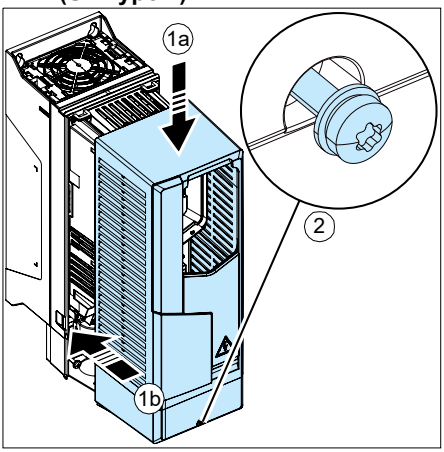

IP21 (UL Type 1) R3…R4

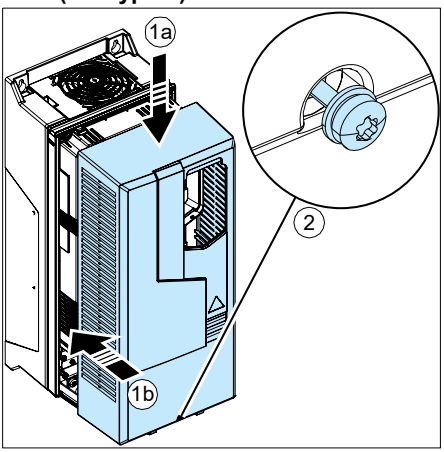

IP55 (UL Type 12) R1…R3

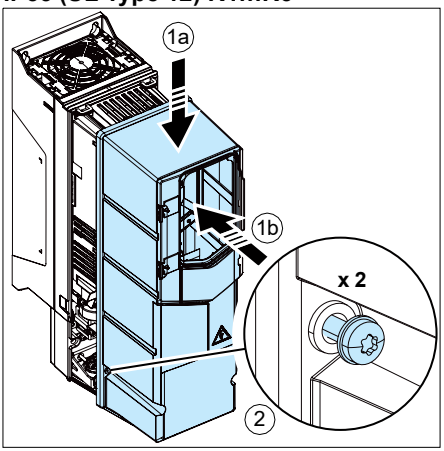

IP55 (UL Type 12) R4

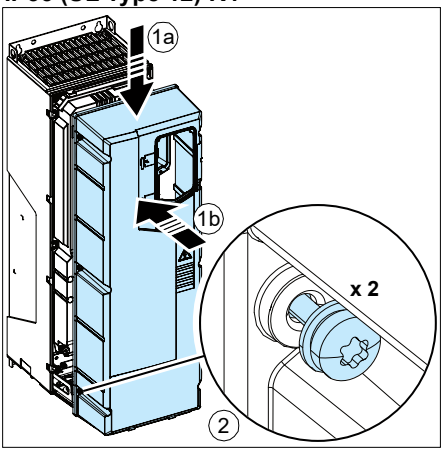

UL NEC

Reinstalling covers, frame R5

IP21 (UL Type 1)

1. Reinstall the box cover: Slide the cover upwards (1a) and tighten the retaining screws (1b) with a T20 Torx screwdriver.
2. Reinstall the module cover: Press the cover at the bottom (2a) and tighten the retaining screws (2b).

IP55 (UL Type 12)

1. Reinstall the front cover: Press the cover at the bottom (1a) and tighten the retaining screws (1b) with a T20 Torx screwdriver.

IP21 (UL Type 1)

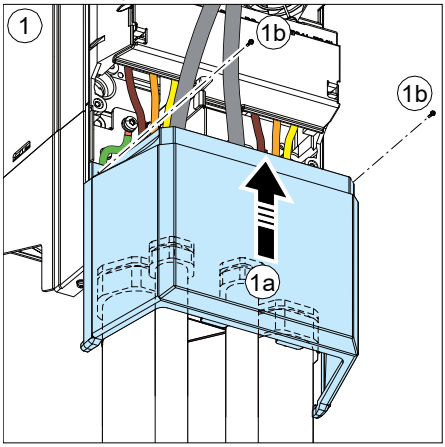

IP21 (UL Type 1)

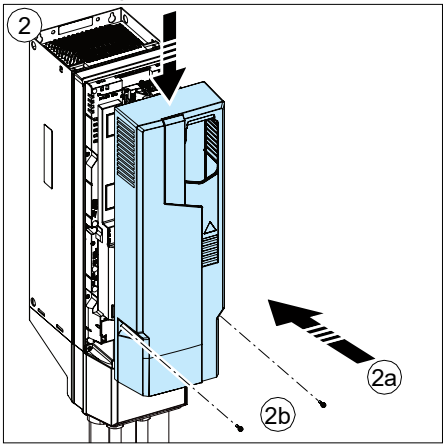

IP55 (UL Type 12)

UL NEC

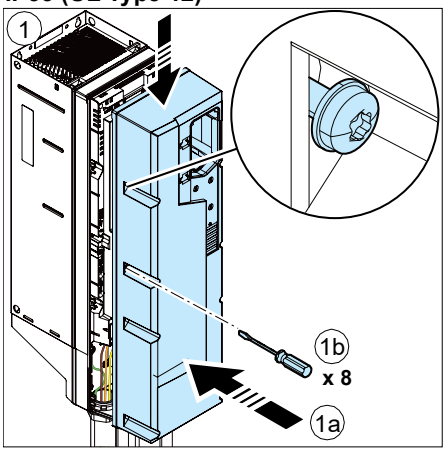

Reinstalling side plates and covers, frames R6…R9

IP21 (UL Type 1)

1. Reinstall the side plates of the cable box (1a). Tighten the retaining screws with a screwdriver with a T20 Torx screwdriver (1b).
2. Slide the cover of the cable box on the module from below until the cover snaps into place.
3. Reinstall the module cover. Tighten the two retaining screws with a screwdriver.

IP55 (UL Type 12)

1. Reinstall the side plates of the cable box. Tighten the retaining screws with a screwdriver with a T20 Torx screwdriver.

IP21 (UL Type 1)

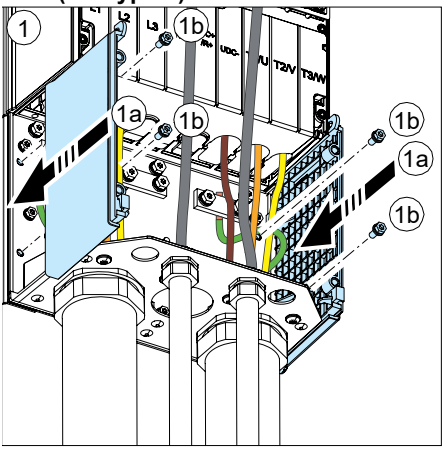

IP21 (UL Type 1)

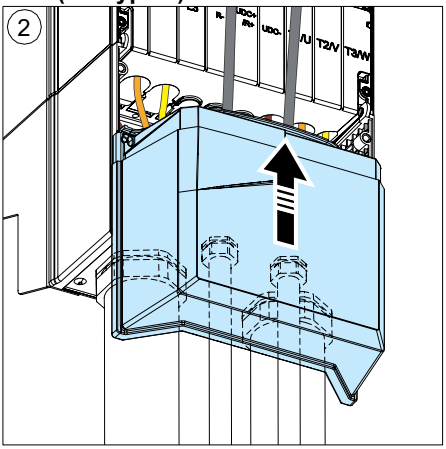

IP21 (UL Type 1)

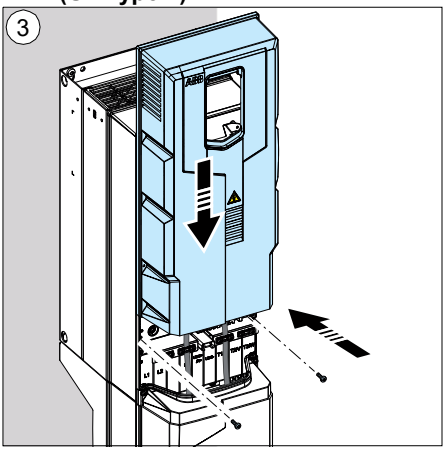

IP55 (UL Type 12)

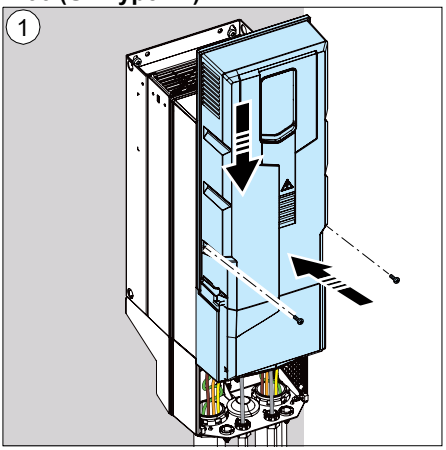

UL NEC

Installing UL Type 12 hood

See *UL Type 12 hood quick installation guide for ACS580-01, ACH580-01 and ACQ580-01 frames R1 to R9* (3AXD50000196067 [English]) which is included in the hood package.

UL
NEC

Connecting a PC

To be able to connect a PC to the drive, you need an assistant control panel (ACH-AP-H or ACH-AP-W). It is also possible to use the CCA-01 configuration adapter when the drive is not connected to the power supply network or external 24 V supply; the CCA-01 does not work if the drive is powered.

Connect a PC to the drive with a USB data cable (USB Type A <-> USB Type Mini-B) as follows:

1. Lift the USB connector cover from bottom upwards.
2. Put the USB cable Mini-B plug in the control panel USB connector.
3. Put the USB cable A-plug in the USB connector of the PC (3a). The panel displays text “USB connected” (3b).

Note: Panel keys cannot be used when a USB data cable is connected to the panel.

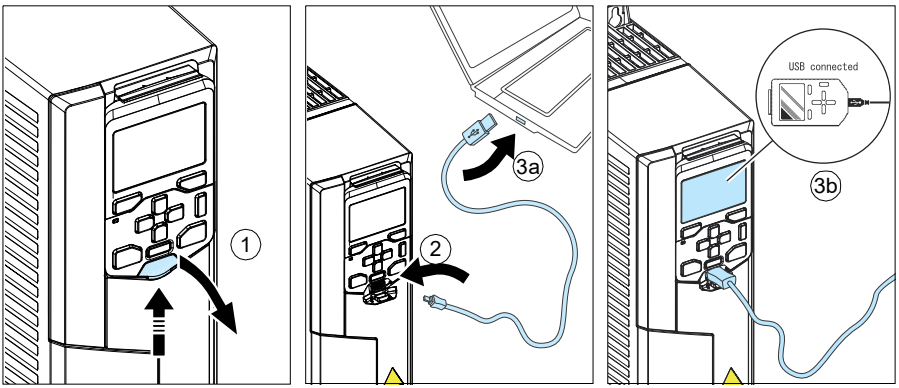

For information on using the Drive composer PC tool, see *Drive composer PC tool user's manual* (3AUA0000094606 [English]).

You can connect a remote ACH-AP-H or ACH-AP-W control panel to the drive, or to chain the control panel or a PC to several drives on a panel bus with a CDPI-01 communication adapter module. See *CDPI-01 communication adapter module user's manual* (3AXD50000009929 [English]).

UL NEC

UL
NEC

8

Installation checklist

Contents of this chapter

This chapter contains an installation checklist which you must complete before you start up the drive.

Warnings

WARNING! Obey the instructions in chapter *Safety instructions* on page *15*. If you ignore them, injury or death, or damage to the equipment can occur.

Checklist

Do the steps in section *Precautions before electrical work* on page *18* before you start the work. Go through the checklist together with another person.

☑	**Check that …**
☐	The ambient operating conditions meet the specification in section *Ambient conditions* on page *296*.
☐	If the drive will be connected to another system than symmetrically grounded TN-S system: Check if you must disconnect the EMC filter or ground-to-phase varistor. See section • IEC: *Checking the compatibility with IT (ungrounded), corner-grounded delta, midpoint-grounded delta and TT systems* on page *116*, or • North America: *Checking the compatibility with IT (ungrounded), corner-grounded delta, midpoint-grounded delta and TT systems* on page *170*.

☑	**Check that …**
☐	If the drive has not been powered (either in storage or unused) over one year: The electrolytic DC capacitors in the DC link of the drive have been reformed. See section *Reforming the capacitors* on page *238*.
☐	There is an adequately sized protective earth (ground) conductor between the drive and the switchboard.
☐	There is an adequately sized protective earth (ground) conductor between the motor and the drive.
☐	All protective earth (ground) conductors have been connected to the appropriate terminals and the terminals have been tightened (pull conductors to check).
☐	The supply voltage matches the nominal input voltage of the drive. Check the type designation label.
☐	The input power cable has been connected to appropriate terminals, the phase order is correct, and the terminals have been properly tightened. (Pull conductors to check.)
☐	Appropriate supply fuses and disconnector have been installed.
☐	The motor cable has been connected to appropriate terminals, the phase order is right, and the terminals have been tightened. (Pull conductors to check.)
☐	The brake resistor cable (if present) has been connected to appropriate terminals, and the terminals have been tightened. (Pull conductors to check.)
☐	The motor cable (and brake resistor cable, if present) has been routed away from other cables.
☐	The control cables (if any) have been connected to the control board.
☐	There are no tools, foreign objects or dust from drilling inside the drive.
☐	Drive and motor connection box covers are in place.
☐	The motor and the driven equipment are ready for start-up.

9

Maintenance and hardware diagnostics

Contents of this chapter

This chapter contains preventive maintenance instructions and LED indicator descriptions.

Maintenance intervals

The table below shows the maintenance tasks which can be done by the end user. The complete maintenance schedule is available on the Internet (www.abb.com/drivesservices). For more information, consult your local ABB Service representative (www.abb.com/searchchannels).

Maintenance and component replacement intervals are based on the assumption that the equipment is operated within the specified ratings and ambient conditions. ABB recommends annual drive inspections to ensure the highest reliability and optimum performance.

Note: Long term operation near the specified maximum ratings or ambient conditions may require shorter maintenance intervals for certain components. Consult your local ABB Service representative for additional maintenance recommendations.

Description of symbols

Action	Description
I	**Inspection** (visual inspection and maintenance action if needed)
P	**Performance** of on/off-site work (commissioning, tests, measurements or other work)
R	**Replacement**

Functional safety

I	Safety function test interval
R	Safety component expiry (Mission time T_M) 20 years

Recommended annual actions by the user

Action	Description
P	Quality of supply voltage
I	Spare parts
P	DC circuit capacitors reforming for spare modules and spare capacitors (page *238*)
I	Tightness of terminals
I	Dustiness, corrosion or temperature
P	Heat sink cleaning (page *227*)

Recommended maintenance actions by the user

Component	Years from start-up						
	3	6	9	12	15	18	21
Cooling							
Fans, IP21 (UL Type 1) frames R1 to R9							
Main cooling fan R1…R4: page *229*, R5: page *231*		R		R		R	
Main cooling fan R6…R8: page *231*, R9: page *232*			R			R	
Auxiliary cooling fan for circuit boards, R5…R9 only: page *233*			R			R	
Fans, IP55 (UL Type 12) frames R1 to R9							
Main cooling fan R1…R4: page *229*, R5: page *231*		R		R		R	
Main cooling fan R6…R8: page *231*, R9: page *232*			R			R	
Auxiliary cooling fan for circuit boards R1…R2[1]: page *234*	R	R	R	R	R	R	R
Auxiliary cooling fan for circuit boards R3: page *235*, R4: page *236*, R5…R9: page *233*			R			R	
Second auxiliary cooling fan R8 and R9: page *237*			R			R	
Aging							
Control panel battery: page *239*			R			R	

4FPS10000309652.xlsx I

[1] Valid for ACH580-01 type codes listed in this manual. For other type codes, see *ACH580-01 (0.75 to 250 kW, 1 to 350 hp) hardware manual* (3AUA0000076331 [English]).

Heatsink

The drive heatsink fins pick up dust from the cooling air. The drive can run into overtemperature warnings and faults if the heatsink is not clean. When necessary, clean the heatsink as follows.

WARNING! Obey the instructions in chapter *Safety instructions* on page *15*. Ignoring the instructions can cause physical injury or death, or damage to the equipment.

WARNING! Use a vacuum cleaner with antistatic hose and nozzle. Using a normal vacuum cleaner creates static discharges which can damage circuit boards.

---

1. Stop the drive and disconnect it from the power line. Wait for 5 minutes and then make sure by measuring that there is no voltage. See section *Precautions before electrical work* on page *18* before you start the work.
2. Remove the cooling fan(s). See section *Fans* on page *228*.
3. Blow clean, dry and oil free compressed air from bottom to top and simultaneously use a vacuum cleaner at the air outlet to trap the dust.

   Note: If there is a risk of dust entering adjoining equipment, do the cleaning in another room.
4. Reinstall the cooling fan(s).

Fans

See section *Maintenance intervals* on page *225* for the fan replacement interval in average operation conditions.

In a speed-controlled fan, the speed of the fan matches the cooling needs. This increases the life span of the fan.

Main fans are speed controlled. When the drive is stopped, the main fan is kept running at low speed to cool the control board. IP21 (UL Type 1) frames R5…R9 and all IP55 (UL Type 12) frames have auxiliary fans that are not speed controlled and run all the time when the control board is powered.

Replacement fans are available from the manufacturer. Do not use other than specified spare parts.

Replacing the main cooling fan, IP21 and IP55 (UL Type 1 and UL Type 12) frames R1…R4

WARNING! Obey the instructions in chapter *Safety instructions* on page *15*. Ignoring the instructions can cause physical injury or death, or damage to the equipment.

1. Stop the drive and disconnect it from the power line. Wait for 5 minutes and then make sure by measuring that there is no voltage. See section *Precautions before electrical work* on page *18* before you start the work.

R1…R3

2. Lever the fan assembly off the drive frame with for example a screwdriver (2a) and pull out the fan assembly (2b) until you can unplug the fan power supply wires from the fan assembly (2c).
3. Install the fan assembly in reverse order.

   R1…R2: Put the connector and extra length of wires in the groove so that the wires do not get caught in the revolving fan.

   R3: Put the extra length of wires under the fan assembly so that the wires do not get caught in the revolving fan.

R1…R2

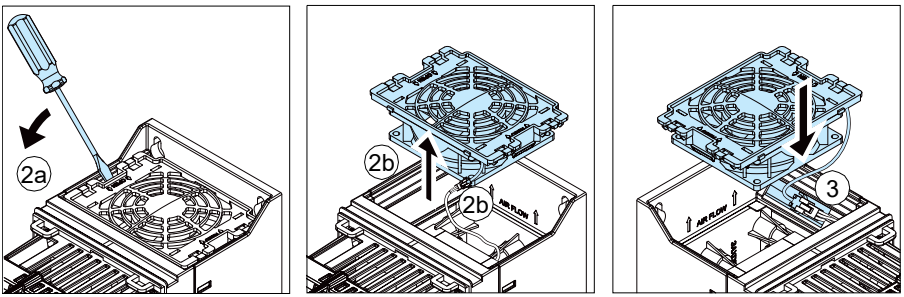

R3

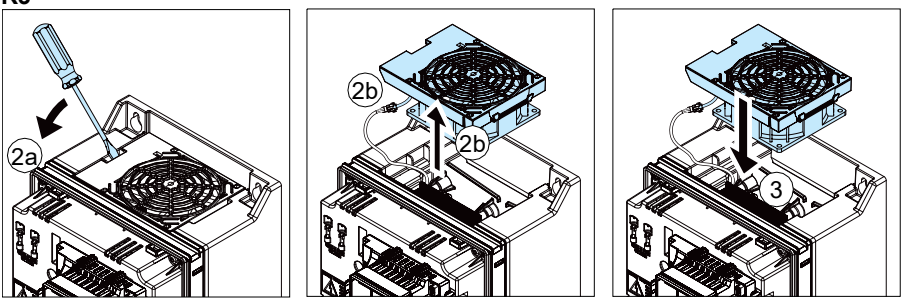

R4

2. Lever the fan assembly off the drive frame with for example a screwdriver (2a) and pull out the fan assembly (2b).
3. Install the fan assembly in reverse order.

R4

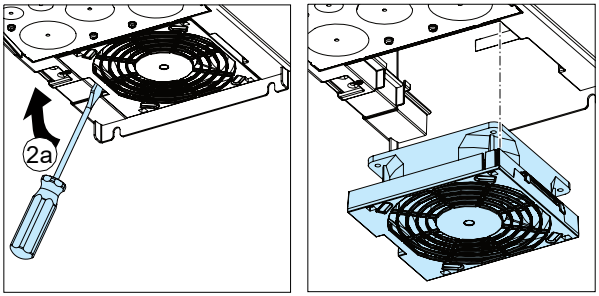

Replacing the main cooling fan, IP21 and IP55 (UL Type 1 and UL Type 12) frames R5…R8

WARNING! Obey the instructions in chapter *Safety instructions* on page *15*. Ignoring the instructions can cause physical injury or death, or damage to the equipment.

1. Stop the drive and disconnect it from the power line. Wait for 5 minutes and then make sure by measuring that there is no voltage. See section *Precautions before electrical work* on page *18* before you start the work.
2. Remove the two mounting screws of the fan mounting plate at the bottom of the drive.
3. Pull the fan mounting plate down from the side edge.
4. Unplug the fan power supply wires from the drive.
5. Lift the fan mounting plate off.
6. Remove the fan from the mounting plate.
7. Install the new fan in reverse order.

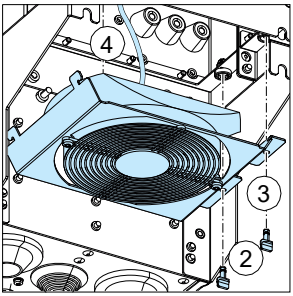

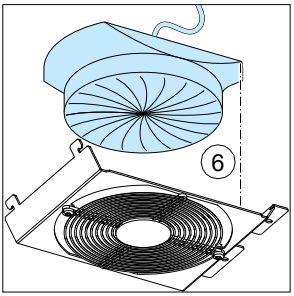

Replacing the main cooling fans, IP21 and IP55 (UL Type 1 and UL Type 12) frame R9

WARNING! Obey the instructions in chapter *Safety instructions* on page *15*. Ignoring the instructions can cause physical injury or death, or damage to the equipment.

1. Stop the drive and disconnect it from the power line. Wait for 5 minutes and then make sure by measuring that there is no voltage. See section *Precautions before electrical work* on page *18* before you start the work.
2. Remove the two mounting screws of the fan mounting plate.
3. Turn the mounting plate downwards.
4. Unplug the fan power supply wires from the drive.
5. Remove the fan mounting plate.
6. Remove the fans by removing the two mounting screws.
7. Install the new fans in reverse order.

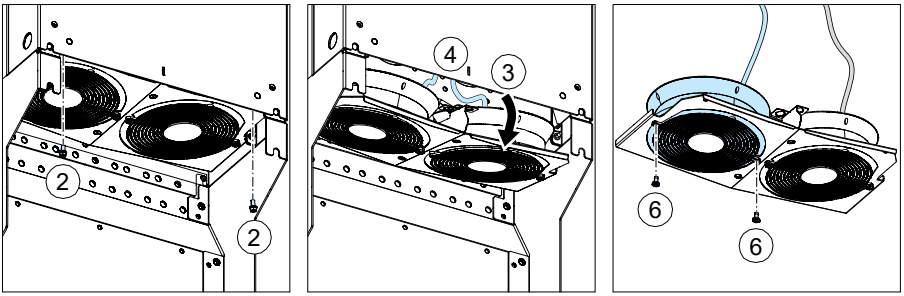

Replacing the auxiliary cooling fan, IP21 and IP55 (UL Type 1 and UL Type 12) frames R5…R9

WARNING! Obey the instructions in chapter *Safety instructions* on page *15*. Ignoring the instructions can cause physical injury or death, or damage to the equipment.

1. Stop the drive and disconnect it from the power line. Wait for 5 minutes and then make sure by measuring that there is no voltage. See section *Precautions before electrical work* on page *18* before you start the work.
2. Remove the front cover (see page *79*).
3. Unplug fan power supply wires from the drive.
4. Release the retaining clips.
5. Lift the fan off.
6. Install the new fan in reverse order.
   Note: Make sure that the arrow on the fan points up.

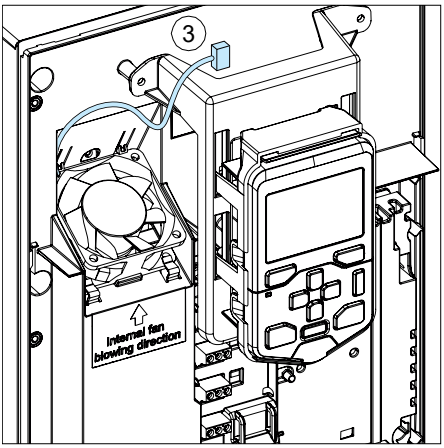

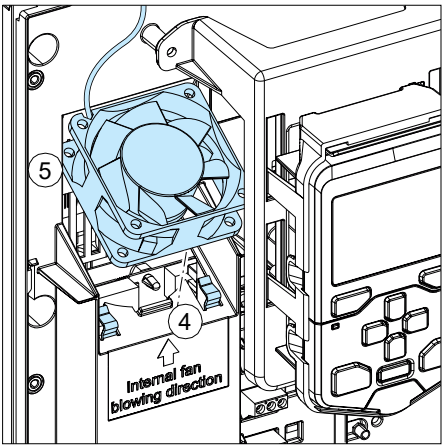

Replacing the auxiliary cooling fan, IP55 (UL Type 12) frames R1…R2

WARNING! Obey the instructions in chapter *Safety instructions* on page *15*. Ignoring the instructions can cause physical injury or death, or damage to the equipment.

1. Stop the drive and disconnect it from the power line. Wait for 5 minutes and then make sure by measuring that there is no voltage. See section *Precautions before electrical work* on page *18* before you start the work.
2. Remove the control panel: Press the retaining clip of the IP55 panel cover (2a) and open the cover (2b). Press the retaining clip of the control panel at the top (2c) and pull it forward from the top edge (2d).
3. Remove the front cover: Loosen the retaining screws with a screwdriver (3a) and lift the cover from the bottom outwards (3b) and then up (3c).
4. Unplug the fan power supply wires from the drive.
5. Remove the fingerguard: Insert a screwdriver into the hole of the fingerguard (5a), bend the front edge of the fingerguard a little away from the drive frame with the screwdriver (5b) and pull the fingerguard out of the groove (5c).
6. Pull off the fan.
7. Install the new fan assembly in reverse order. Route the wires round the pins. **Note:** Make sure that the arrow on the fan points to the same direction as the arrow on the drive frame.

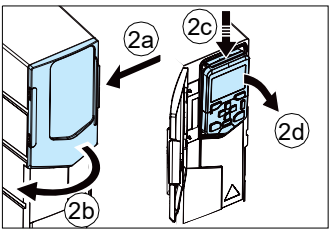

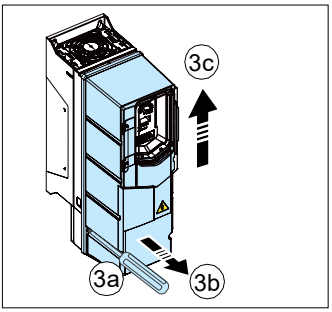

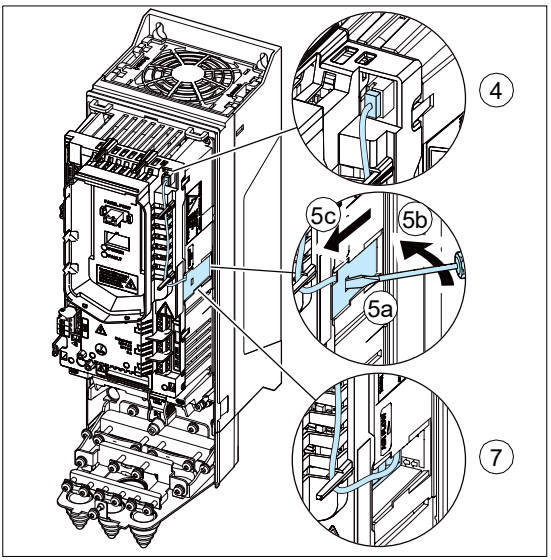

Replacing the auxiliary cooling fan, IP55 (UL Type 12) frame R3

WARNING! Obey the instructions in chapter *Safety instructions* on page *15*. Ignoring the instructions can cause physical injury or death, or damage to the equipment.

1. Stop the drive and disconnect it from the power line. Wait for 5 minutes and then make sure by measuring that there is no voltage. See section *Precautions before electrical work* on page *18* before you start the work.
2. Remove the control panel: Press the retaining clip of the IP55 panel cover (2a) and open the cover (2b). Press the retaining clip of the control panel at the top (2c) and pull it forward from the top edge (2d).
3. Remove the front cover: Loosen the retaining screw with a screwdriver (3a) and lift the cover from the bottom outwards (3b) and then up (3c).
4. Unplug the fan power supply wires from the drive.
5. Detach the fan cable from the holders.
6. Pull off the plastic housing.
7. Pull off the fan.
8. Install the new fan and housing in reverse order.
   Note: Make sure that the arrow on the fan points to the same direction as the arrow on the plastic housing (down).

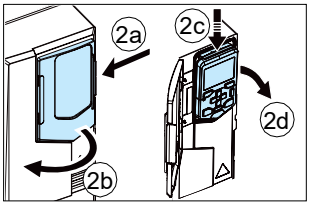

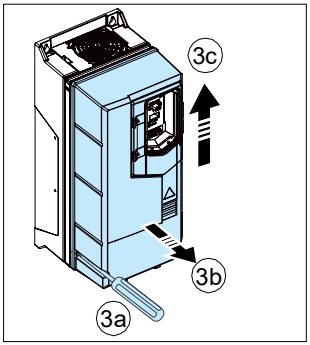

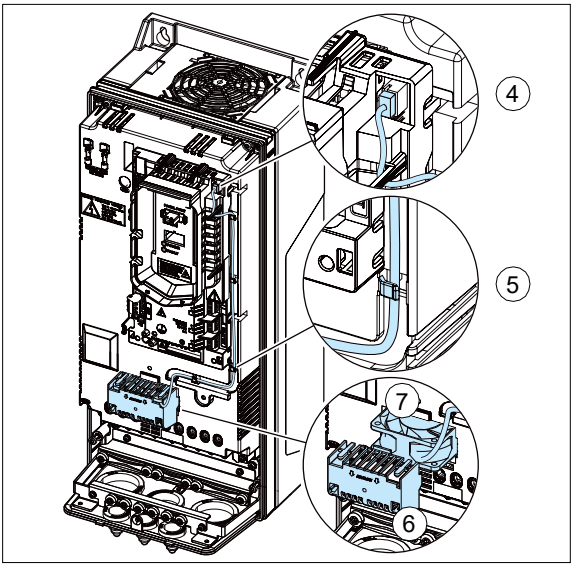

Replacing the auxiliary cooling fan, IP55 (UL Type 12) frame R4

WARNING! Obey the instructions in chapter *Safety instructions* on page *15*. Ignoring the instructions can cause physical injury or death, or damage to the equipment.

1. Stop the drive and disconnect it from the power line. Wait for 5 minutes and then make sure by measuring that there is no voltage. See section *Precautions before electrical work* on page *18* before you start the work.
2. Remove the control panel: Press the retaining clip of the IP55 panel cover (2a) and open the cover (2b). Press the retaining clip of the control panel at the top (2c) and pull it forward from the top edge (2d)
3. Remove the front cover: Loosen the retaining screws (6 pieces) with a screwdriver (3a) and lift the cover from the bottom outwards (3b) and then up (3c).
4. Unplug the fan power supply wires from the drive.
5. Detach the fan cable from the clips.
6. Pull the fan off.
7. Install the new fan in reverse order.
   Note: Make sure that the arrow on the fan points down.

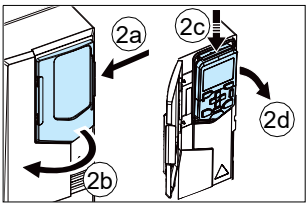

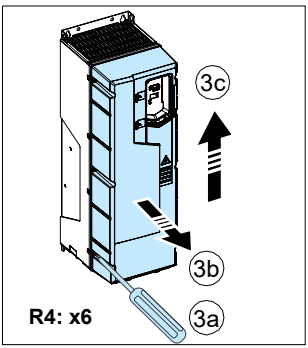

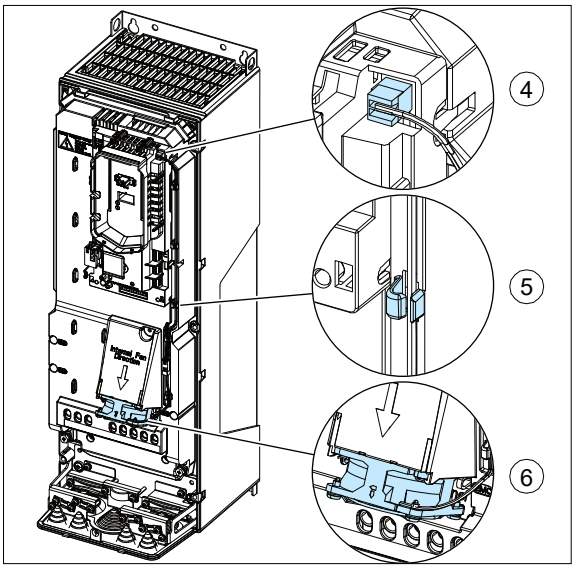

Replacing the second auxiliary cooling fan, IP55 (UL Type 12) frames R8…R9

WARNING! Obey the instructions in chapter *Safety instructions* on page *15*. Ignoring the instructions can cause physical injury or death, or damage to the equipment.

1. Stop the drive and disconnect it from the power line. Wait for 5 minutes and then make sure by measuring that there is no voltage. See section *Precautions before electrical work* on page *18* before you start the work.
2. Remove the front cover: Loosen the retaining screws (14 pieces) with a screwdriver (2a) and lift the cover from the bottom outwards (2b) and then up (2c).
3. Remove the lower cover panel from the cover.
4. Unplug the fan power supply wires from the connector on the other side of the IP55 (UL Type 12) front cover.
5. Remove the retaining screws (5a) and pull off the fan (5b).
6. Install the new fan in reverse order.
   Note: Make sure that the arrow on the fan points up.

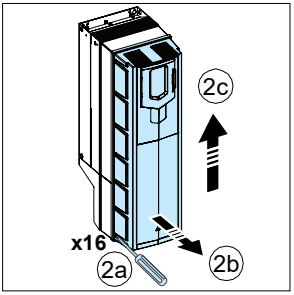

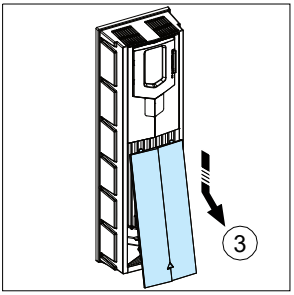

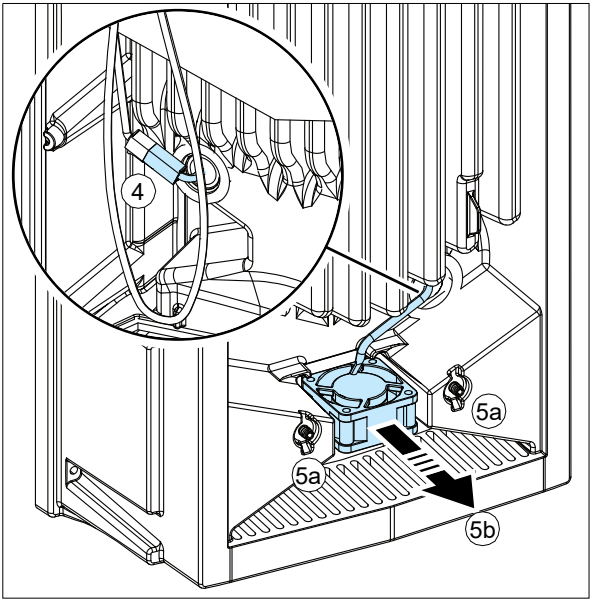

Capacitors

The drive intermediate DC circuit employs several electrolytic capacitors. Their lifespan depends on the operating time of the drive, loading and ambient temperature. Capacitor life can be prolonged by lowering the ambient temperature.

Capacitor failure is usually followed by damage to the drive and an input cable fuse failure, or a fault trip. Contact the manufacturer if capacitor failure is suspected. Replacements are available from the manufacturer. Do not use other than specified spare parts.

Reforming the capacitors

The capacitors must be reformed if the drive has not been powered (either in storage or unused) for a year or more. See section *Type designation label* on page *47* for how to find out the manufacturing date from the serial number.

For information on reforming the capacitors, see *Converter module capacitor reforming instructions* (3BFE64059629 [English]), available on the Internet (go to http://www.abb.com and enter the document code in the Search field).

Control panel

Cleaning the control panel

Use a soft damp cloth to clean the control panel. Avoid harsh cleaners which could scratch the display window.

Replacing the battery in the control panel

A battery is used in all control panels to keep the clock operating in memory during power interruptions.

The expected life for the battery is greater than ten years.

Note: The battery is NOT required for any control panel or drive functions, except the clock.

1. Remove the control panel from the drive. See section *Control panel* on page *46*.
2. To remove the battery, use a coin to rotate the battery cover on the back of the control panel.
3. Replace the battery with type CR2032. Dispose the old battery according to local disposal rules or applicable laws.

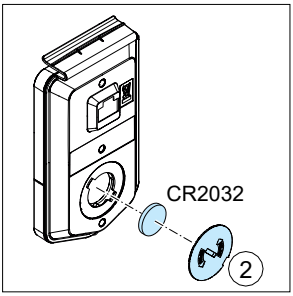

LEDs

Drive LEDs

There is a green POWER and a red FAULT LED on the front of the drive. They are visible through the panel cover but invisible if a control panel is attached to the drive. The table below describes the drive LED indications.

Drive LEDs POWER and FAULT, on the front of the drive, under the control panel / panel cover If a control panel is attached to the drive, switch to remote control (otherwise a fault will be generated), and then remove the panel to be able to see the LEDs				
LEDs off	**LED lit and steady**		**LED blinking**	
No power	Green (POWER)	Power supply on the board OK	Green (POWER)	Blinking: Drive in an alarm state Blinking for one second: Drive selected on the control panel when multiple drives are connected to the same panel bus.
	Red (FAULT)	Active fault in the drive. To reset the fault, press RESET from the control panel or switch off the drive power.	Red (FAULT)	Active fault in the drive. To reset the fault, switch off the drive power.

Control panel LEDs

The control panel has one LED. The table below describes the control panel LED indications. For more information see A*CX-AP-x assistant control panels user's manual* (3AUA0000085685 [English]).

Control panel LED, at the left edge of the control panel				
LED off	**LED lit and steady**		**LED blinking/flickering**	
Panel has no power	Green	Drive functioning normally. Connection between the drive and control panel may be faulty or lost, or the panel and drive may be incompatible. Check the control panel display.	Green	Blinking: Active warning in the drive Flickering: Data transferred between the PC tool and drive through the USB connection of the control panel
	Red	Check the display to see where the fault is. • Active fault in the drive. Reset the fault. • Active fault in another drive in the panel bus. Switch to the drive in question and check and reset the fault.	Red	Active fault in the drive. To reset the fault, cycle the drive power.
			Blue	Panels with a Bluetooth interface only. Blinking: Bluetooth interface is enabled. It is in discoverable mode and ready for pairing. Flickering: Data is transfered through the Bluetooth interface of the control panel.

10

Technical data

Contents of this chapter

This chapter contains the technical specifications of the drive, for example ratings, sizes and technical requirements as well as provisions for fulfilling the requirements for CE, UL and other approval marks.

Electrical ratings

IEC ratings at U_N = 230 V

Type ACH580 -01-	Input rating	Output ratings			Heat dissipation	Air flow	Frame size
		Max. current	Nominal use				
	I_1	I_{max}	I_N	P_N			
	A	A	A	kW	W	m³/h	
3-phase U_N = 230 V							
04A7-2	4.7	6.3	4.7	0.75	45	43	R1
06A7-2	6.7	8.9	6.7	1.1	55	43	R1
07A6-2	7.6	11.9	7.6	1.5	66	43	R1
012A-2	12.0	19.1	12.0	3.0	106	43	R1
018A-2	16.9	22.0	16.9	4.0	133	43	R1
025A-2	24.5	32.7	24.5	5.5	174	101	R2
032A-2	31.2	43.6	31.2	7.5	228	101	R2
047A-2	46.7	62.4	46.7	11	322	179	R3
060A-2	60	83.2	60.0	15	430	179	R3
089A-2	89	135	89	22	619	139	R5
115A-2	115	158	115	30	835	139	R5
144A-2	144	205	144	37	1035	435	R6
171A-2	171	257	171	45	1251	450	R7
213A-2	213	304	213	55	1521	450	R7
276A-2	276	380	276	75	2061	550	R8

3AXD00000586715.xls L

Type ACH580-01-	Input ratings	Output ratings		Frame size
	I_1	I_N	P_N	
	A	A[1]	kW	
1-phase U_N = 230 V				
04A7-2	3.3	2.2	0.37	R1
06A7-2	4.6	3.2	0.5	R1
07A6-2	6.3	4.2	0.75	R1
12A0-2	8.9	6.0	1.1	R1
018A-2	11.8	6.8	1.5	R1
025A-2	17.3	9.6	2.2	R2
032A-2	30.4	15.2	4.0	R2
047A-2	42	22	5.5	R3
060A-2	55	28	7.5	R3
089A-2	81	42	11	R5
115A-2	111	54	15	R5
144A-2	137	68	18.5	R6
171A-2	153	80	22	R7
213A-2	209	104	30	R7
276A-2	258	130	37	R8

3AXD00000586715.xls L

[1] Continuous current, no overloadability

See definitions and notes on page *248*.

IEC ratings at U_N = 400 V

Type ACH580 -01-	Input rating	Output ratings			Heat dissipation	Air flow	Frame size
		Max. current	Nominal use				
	I_1	I_{max}	I_N	P_N			
	A	A	A	kW	W	m^3/h	
3-phase U_N = 400 V							
02A7-4	2.6	3.2	2.6	0.75	45	43	R1
03A4-4	3.3	4.7	3.3	1.1	55	43	R1
04A1-4	4.0	5.9	4.0	1.5	66	43	R1
05A7-4	5.6	7.2	5.6	2.2	84	43	R1
07A3-4	7.2	10.1	7.2	3.0	106	43	R1
09A5-4	9.4	13.0	9.4	4.0	133	43	R1
12A7-4	12.6	15.3	12.6	5.5	174	43	R1
018A-4	17.0	22.7	17.0	7.5	228	101	R2
026A-4	25.0	30.6	25.0	11.0	322	101	R2
033A-4	32.0	44.3	32.0	15.0	430	179	R3
039A-4	38.0	56.9	38.0	18.5	525	179	R3
046A-4	45.0	67.9	45.0	22.0	619	179	R3
062A-4	62	76	62	30	835	134	R4
073A-4	73	104	73	37	1024	134	R4
088A-4	88	122	88	45	1240	139	R5
106A-4	106	148	106	55	1510	139	R5
145A-4	145	178	145	75	1476	435	R6
169A-4	169	247	169	90	1976	450	R7
206A-4	206	287	206	110	2346	450	R7
246A-4	246	350	246	132	3336	550	R8
293A-4	293	418	293	160	3936	550	R8
363A-4	363	498	363	200	4836	1150	R9
430A-4	430	545	430	250	6036	1150	R9

3AXD00000586715.xls L

See definitions and notes on page 248.

IEC ratings at U_N = 480 V

Type ACS580 -01-	Input rating	Output ratings					Max. losses	Air flow	Frame size
		Max. current	Nominal use		Heavy-duty use				
	I_1	I_{max}	I_L	P_L	I_{Hd}	P_{Hd}			
	A	A	A	hp	A	hp	W	m³/h	
3-phase U_N = 480 V									
02A7-4	2.1	2.9	2.1	1.0	1.6	0.75	45		R1
03A4-4	3.0	3.8	3.0	1.5	2.1	1.0	55		R1
04A1-4	3.4	5.4	3.	2.0	3.0	1.5	66		R1
05A7-4	4.8	6.1	4.8	3.0	3.4	2.0	84		R1
07A3-4	6.0	7.2	6.0	3.0	4.0	3.0	106		R1
09A5-4	7.6	8.6	7.6	5.0	4.8	3.0	133		R1
12A7-4	11.0		1.0	7.5		5.0	174		R1
018A-4	14.0	19.8	14.0	10.0	11.0	7.5	228		R2
026A-4	21.0	25.2	2.0	1.0		10.0	322		R2
033A-4	27.0	37.8	27.0	20.0	21.0	15.0	430		R3
039A-4	34.0	48.6	34.0	25.0	27.0	20.0	525		R3
046A-4	40.0	61.2	44.0	30.0	34.0	25.0	619		R3
062A-4	52	76	52	40	40	30.0	835		R4
073A-4	65	104	65	50	52	40.0	1024		R4
088A-4	77	122	77	60	65	50.0	1240		R5
106A-4	96	148	96	75	77	60.0	1510		R5
145A-4	124	178	124	100	96	75	1476		R6
169A-4	156	247	156	125	124	100	1976		R7
206A-4	180	287	180	150	156	125	2346		R7
246A-4	240	350	240	200	180	150	3336		R8
293A-4	260	418	260	200	240[1)]	150	3936		R8
363A-4	361	542	361	300	302	250	4836		R9
430A-4	414	542	414	350	361[2)]	300	6036		R9

3AXD00000586715.xls

Type ACH580 -01-	Input rating	Output ratings			Heat dissipation	Air flow	Frame size
		Max. current	Nominal use				
	I_1	I_{max}	I_{Ld}	P_{Ld}			
	A	A	A	hp	W	m³/h	
3-phase U_N = 480 V							
02A7-4	2.1	2.9	2.1	1.0	45	43	R1
03A4-4	3.0	3.8	3.0	1.5	55	43	R1
04A1-4	3.4	5.4	3.5	2.0	66	43	R1
05A7-4	4.8	6.1	4.8	3.0	84	43	R1
07A3-4	6.0	7.2	6.0	3.0	106	43	R1
09A5-4	7.6	8.6	7.6	5.0	133	43	R1
12A7-4	11.0	13.7	12.0	7.5	174	43	R1
018A-4	14.0	19.8	14.0	10.0	228	101	R2
026A-4	21.0	25.2	23.0	15.0	322	101	R2

Type ACH580 -01-	Input rating	Output ratings			Heat dissipation	Air flow	Frame size
		Max. current	Nominal use				
	I_1	I_{max}	I_{Ld}	P_{Ld}			
	A	A	A	hp	W	m^3/h	
033A-4	27.0	37.8	27.0	20.0	430	179	R3
039A-4	34.0	48.6	34.0	25.0	525	179	R3
046A-4	40.0	61.2	44.0	30.0	619	179	R3
062A-4	52	76	52	40	835	134	R4
073A-4	65	104	65	50	1024	134	R4
088A-4	77	122	77	60	1240	139	R5
106A-4	96	148	96	75	1510	139	R5
145A-4	124	178	124	100	1476	435	R6
169A-4	156	247	156	125	1976	450	R7
206A-4	180	287	180	150	2346	450	R7
246A-4	240	350	240	200	3336	550	R8
293A-4	260	418	260	200	3936	550	R8
363A-4	361	542	361	300	4836	1150	R9
430A-4	414	542	414	350	6036	1150	R9

3AXD00000586715.xls L

Definitions

U_N Nominal output voltage of the drive. For input voltage range U_1, see section *Electrical power network specification* on page *286*.

I_1 Nominal input current. Continuous rms input current (for dimensioning cables and fuses).

I_{max} Maximum output current. Available for two seconds at start.

I_N Nominal output current. Maximum continuous rms output current allowed (no overload). This is indicated in the type designation label as output current I2.

P_N Nominal power of the drive. Typical motor power (no overload). The kilowatt ratings apply to most IEC 4-pole motors. The horsepower (hp) ratings apply to most NEMA 4-pole motors.

I_{Ld} Maximum current with 10% overload, allowed for one minute every ten minutes

P_{Ld} Typical motor power in light-duty use (10% overload). The horsepower (hp) ratings apply to most NEMA 4-pole motors.

I_{Hd} Maximum current with 50% overload, allowed for one minute every ten minutes

1) Maximum current with 30% overload, allowed for one minute every ten minutes

2) Maximum current with 25% overload, allowed for one minute every ten minutes

P_{Hd} Typical motor power in heavy-duty use (50% overload)

UL (NEC) ratings at U_N = 208/230 V

Type ACH580 -01-	Input rating	Output ratings			Heat dissipation		Air flow	Frame size
		Max. current	Light-duty use					
	I_1	I_{max}	I_{Ld}	P_{Ld}				
	A	A	A	hp	BTU/h	W	CFM	
3-phase U_1 = 200...240 V, P_n at U_N = 208/230 V, 60 Hz								
04A6-2	4.6	6.3	4.6	1.0	155	45	25	R1
06A6-2	6.6	8.9	6.6	1.5	187	55	25	R1
07A5-2	7.5	11.9	7.5	2.0	224	66	25	R1
10A6-2	10.6	14.3	10.6	3.0	288	84	25	R1
017A-2	16.7	22.6	16.7	5.0	454	133	25	R1
024A-2	24	32.7	24.2	7.5	593	174	59	R2
031A-2	31	43.6	30.8	10	777	228	59	R2
046A-2	46	62.4	46.2	15	1100	322	105	R3
059A-2	59	83.2	59.4	20	1469	430	105	R3
075A-2	75	107	74.8	25	1791	525	170	R4
088A-2	88	135	88	30	2114	619	82	R5
114A-2	114	158	114	40	2852	835	82	R5
143A-2	143	205	143	50	3535	1035	256	R6
169A-2	169	257	169	60	4272	1251	265	R7
211A-2	211	304	211	75	5194	1521	265	R7
273A-2	273	380	273	100	7039	2061	324	R8

3AXD00000586715.xls L

See definitions and notes on page *251*.

UL (NEC) ratings at U_N = 460 V

Type ACH580 -01-	Input rating	Output ratings			Heat dissipation		Air flow	Frame size
		Max. current	Light duty use					
	I_1	I_{max}	I_{Ld}	P_{Ld}				
	A	A	A	hp	BTU/h	W	CFM	
3-phase U_1 = 440...480 V, P_n at U_N = 460 V, 60 Hz								
02A1-4	2.1	2.9	2.1	1.0	155	45	25	R1
03A0-4	3.0	4.1	3.0	1.5	187	55	25	R1
03A5-4	3.5	5.4	3.5	2.0	224	66	25	R1
04A8-4	4.8	6.5	4.8	3.0	288	84	25	R1
07A6-4	7.6	10.8	7.6	5.0	454	133	25	R1
012A-4	12.0	15.3	12.0	7.5	593	174	25	R1
014A-4	14.0	21.6	14.0	10.0	777	228	59	R2
023A-4	23.0	30.5	23.0	15.0	1100	322	59	R2
027A-4	27.0	41.4	27.0	20.0	1469	430	105	R3
034A-4	34.0	48.6	34.0	25.0	1791	525	105	R3
044A-4	44.0	61.2	44.0	30.0	2114	619	105	R3
052A-4	52	79	52	40	2852	835	79	R4
065A-4	65	94	65	50	3497	1024	79	R4
077A-4	77	117	77	60	4235	1240	79	R4
096A-4	96	139	96	75	5157	1510	82	R5
124A-4	124	173	124	100	5041	1476	256	R6
156A-4	156	223	156	125	6748	1976	265	R7
180A-4	180	281	180	150	8012	2346	265	R7
240A-4	240	324	240	200	11393	3336	324	R8
302A-4	302	468	302	250	16516	4836	677	R9
361A-4	361	542	361	300	16516	4836	677	R9
414A-4	414	542	414	350	20614	6036	677	R9

3AXD00000586715.xls L

See definitions and notes on page 251.

UL (NEC) ratings at U_N = 575 V

Type ACH580 -01-	Input rating	Output ratings			Heat dissipation		Air flow	Frame size
		Max. current	Nominal use					
	I_1	I_{max}	I_{Ld}	P_{Ld}				
	A	A	A	hp	BTU/h	W	CFM	
3-phase U_1 = 500...600 V, P_n at U_N = 575 V, 60 Hz								
02A7-6	2.7	4.3	2.7	2.0	224	66	59	R2
03A9-6	3.9	5.3	3.9	3.0	288	84	59	R2
06A1-6	6.1	8.2	6.1	5.0	454	133	59	R2
09A0-6	9.0	12.2	9.0	7.5	593	174	59	R2
011A-6	11.0	16.2	11.0	10	777	228	59	R2
017A-6	17.0	23.0	17.0	15	1100	322	59	R2
022A-6	22	30.6	22	20	1469	430	105	R3
027A-6	27	39.6	27	25	1791	525	105	R3
032A-6	32	48.6	32	30	2114	619	105	R3
041A-6	41	58	41	40	2852	835	82	R5
052A-6	52	74	52	50	3497	1024	82	R5
062A-6	62	94	62	60	4235	1240	82	R5
077A-6	77	112	77	75	5157	1510	82	R5
099A-6	99	139	99	100	7039	2061	265	R7
125A-6	125	178	125	125	8422	2466	265	R7
144A-6	144	225	144	150	10266	3006	324	R8
192A-6	192	259	192	200	13954	4086	677	R9
242A-6	242	346	242	250	16721	4896	677	R9
271A-6	271	411	271	250	16721	4896	677	R9

3AXD00000586715.xls L

Definitions

U_N	Nominal output voltage of the drive. For input voltage range U_1, see section *Electrical power network specification* on page *286*.
I_1	Nominal input current. Continuous rms input current (for dimensioning cables and fuses).
I_{max}	Maximum output current. Available for two seconds at start.
I_{Ld}	Maximum current with 10% overload, allowed for one minute every ten minutes
P_{Ld}	Typical motor power in light-duty use (10% overload). The horsepower (hp) ratings apply to most NEMA 4-pole motors.

Conversion tables for IEC and North American type codes

IEC type ACH580-01-	North American type ACH580-01-	Frame size
3-phase U_N = 230 V		
04A7-2	04A6-2	R1
06A7-2	06A6-2	R1
07A6-2	07A5-2	R1
012A-2	10A6-2	R1
018A-2	017A-2	R1
025A-2	024A-2	R2
032A-2	031A-2	R2
047A-2	046A-2	R3
060A-2	059A-2	R3
-	075A-2	R4
089A-2	088A-2	R5
115A-2	114A-2	R5
144A-2	143A-2	R6
171A-2	169A-2	R7
213A-2	211A-2	R7
276A-2	273A-2	R8
346A-2	343A-2	R9
400A-2	396A-2	R9

3AXD00000586715.xls L

IEC type ACH580-01-	North American type ACH580-01-	Frame size
3-phase U_N = 480 V		
02A7-4	02A1-4	R1
03A4-4	03A0-4	R1
04A1-4	03A5-4	R1
05A7-4	04A8-4	R1
07A3-4	-	R1
09A5-4	07A6-4	R1
12A7-4	012A-4	R1
018A-4	014A-4	R2
026A-4	023A-4	R2
033A-4	027A-4	R3
039A-4	034A-4	R3
046A-4	044A-4	R3
062A-4	052A-4	R4
073A-4	065A-4	R4
088A-4	-	R5
106A-4	096A-4	R5
145A-4	124A-4	R6
169A-4	156A-4	R7

IEC type ACH580-01-	North American type ACH580-01-	Frame size
206A-4	180A-4	R7
246A-4	240A-4	R8
293A-4	-	R8
363A-4	361A-4	R9
430A-4	414A-4	R9

3AXD00000586715.xls L

IEC type ACH580-01-	North American type ACH580-01-	Frame size
3-phase U_N = 600 V		
-	02A7-6	R2
-	03A9-6	R2
-	06A1-6	R2
-	09A0-6	R2
-	011A-6	R2
-	017A-6	R2
-	022A-6	R3
-	027A-6	R3
-	032A-6	R3
-	041A-6	R5
-	052A-6	R5
-	062A-6	R5
-	077A-6	R5
-	099A-6	R7
-	125A-6	R7
-	144A-6	R8
-	192A-6	R9
-	242A-6	R9
-	271A-6	R9

3AXD00000586715.xls L

Note: IEC types not available

Sizing

Drive sizing is based on the rated motor current and voltage. To achieve the rated motor power given in the table, the rated current of the drive must be higher than or equal to the rated motor current. Also the rated power of the drive must be higher than or equal to the rated motor power.

Note: The ratings apply at ambient temperature of 40 °C (104 °F) for I_N (I_{Ld} for UL (NEC)). Above these temperatures derating is required.

Note: The DriveSize dimensioning PC tool available from ABB (http://new.abb.com/drives/software-tools/drivesize) is recommended for selecting the drive, motor and gear combination.

Derating

The output load capacity (I_N, I_{Ld},; note that I_{max} is not derated) decreases in certain situations. In situations, where full motor power is required, oversize the drive so that the total derated output current provides sufficient capacity to supply the required nominal voltage to run the motor.

Note: The DriveSize dimensioning PC tool available from ABB (http://new.abb.com/drives/software-tools/drivesize) is also suitable for derating.

Note: If several situations are present at a time, the effects of derating are cumulative:

I_N (derated) or I_{Ld} (derated)) = (I_N or I_{Ld}) x (switching frequency derating) x (altitude derating) x (ambient temperature derating), where no derating = 1.0

Note: The motor may have a derating on it too.

Example 1, IEC: How to calculate the derated current

The IP21 / UL Type 1 drive type is ACH580-01-062A-4, which has drive output current of 62 A. Calculate the derated drive output current (I_N) at 4kHz switching frequency, at 1500 m altitude and at 50 °C ambient temperature as follows:

1. *Switching frequency derating* (page *260*):
   No derating needed for 4 kHz.
2. *Altitude derating* (page *258*):
   The derating factor for 1500 m is 1 - 1/10 000 m · (1500 - 1000) m = 0.95.
   The derated drive output current becomes I_N = 0.95 · 62 A = 58.9 A.
3. *Ambient temperature derating, IP21 (UL Type 1)* (page *256*):
   The derating factor for 50 °C ambient temperature = 0.90.
   The derated drive output current becomes then I_N = 0.90 · 58.9 A = 53.01 A.

Example 1, UL (NEC): How to calculate the derated current

The IP21 / UL Type 1 drive type is ACH580-01-052A-4, which has drive output current of 52 A. Calculate the derated drive output current (I_{LD}) at 4kHz switching frequency, at 4921 ft (1500 m) altitude and at 50 °C ambient temperature as follows:

1. *Switching frequency derating* (page *260*):
   No derating needed for 4 kHz.
2. *Altitude derating* (page *258*):
   The derating factor for 4921 ft (1500 m) is 1 - 1/10 000 m · (1500 - 1000) m = 0.95.
   The derated drive output current becomes I_{LD} = 0.95 · 52 A = 49.4 A.
3. *Ambient temperature derating, IP21 (UL Type 1)* (page *256*):
   The derating factor for 50 °C ambient temperature = 0.90.
   The derated drive output current becomes then I_{LD} = 0.90 · 49.4 A = 44.46 A.

Example 2, IEC: How to calculate the required drive

If your application requires continuous 12.0 A of motor current (I_N) at 8 kHz switching frequency, the supply voltage is 400 V and the drive is situated at 1500 m altitude and at 35 °C ambient temperature, calculate the appropriate IP21 / UL Type 1 drive size requirement as follows:

1. *Switching frequency derating* (page *260*):
   The minimum size required is I_N = 12.0 A / 0.65 = 18.46 A,
   where 0.65 is the derating for 8 kHz switching frequency (frames R2…R3).
2. *Altitude derating* (page *258*):
   The derating factor for 1500 m is 1 - 1/10 000 m · (1500 - 1000) m = 0.95.
   The minimum size required becomes then I_N = 18.46 A / 0.95 = 19.43 A.
3. *Ambient temperature derating, IP21 (UL Type 1)* (page *256*):
   No derating needed for 35 °C ambient temperature.

Referring to I_N in the ratings tables (starting from page *246*), drive type ACH580-01-026A-4 exceeds the I_N requirement of 19.43 A.

Example 2, UL (NEC): How to calculate the required drive

If your application requires continuous maximum current with 10% overload 12.0 A of motor current (I_{LD}) at 8 kHz switching frequency, the supply voltage is 460 V and the drive is situated at 4921 ft (1500 m) altitude and at 35 °C ambient temperature, calculate the appropriate IP21 / UL Type 1 drive size requirement as follows:

1. *Switching frequency derating* (page *260*):
   The minimum size required is I_{LD} = 12.0 A / 0.65 = 18.46 A,
   where 0.65 is the derating for 8 kHz switching frequency (frames R2…R3).
1. *Altitude derating* (page *258*):
   The derating factor for 4921 ft (1500 m) is 1 - 1/10 000 m · (1500 - 1000) m = 0.95.
   The minimum size required becomes then I_{LD} = 18.46 A / 0.95 = 19.43 A.
1. *Ambient temperature derating, IP21 (UL Type 1)* (page *256*):
   No derating needed for 35 °C ambient temperature.

Referring to I_{LD} in the ratings tables (starting from page *250*), drive type ACH580-01-023A-4 exceeds the I_{LD} requirement of 19.43 A.

Ambient temperature derating, IP21 (UL Type 1)

IP21 (UL Type 1) drive types, other than the exceptions below

In the temperature range +40…50 °C (+104…122 °F), the rated output current is derated by 1% for every added 1 °C (1.8 °F). The output current can be calculated by multiplying the current given in the rating table by the derating factor (k, in the diagram below).

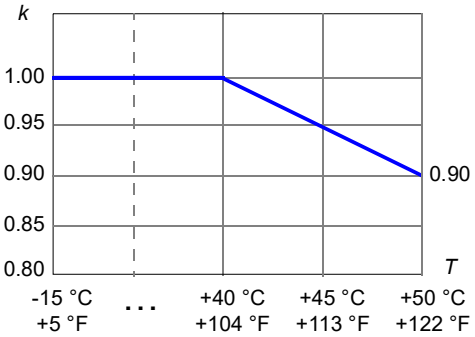

IP21 (UL Type 1) drive type -302A-4

-302A-4: In the temperature range +40…50 °C (+104…122 °F), the rated output current is not derated at all.

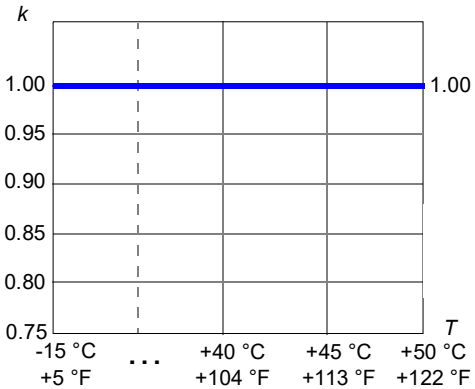

Ambient temperature derating, IP55 (UL Type 12)

IP55 (UL Type 12) drive types, other than the exceptions below

In the temperature range +40…50 °C (+104…122 °F), the rated output current is derated by 1% for every added 1 °C (1.8 °F). The output current can be calculated by multiplying the current given in the rating table by the derating factor (k):

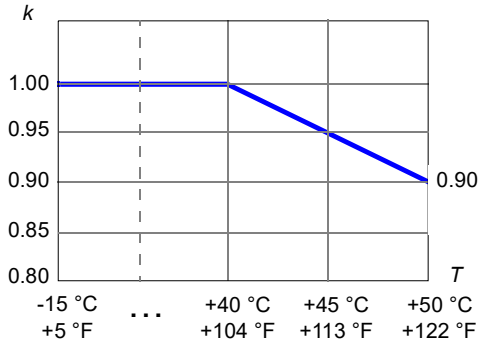

IP55 (UL Type 12) drive type -077A-4, -260A-4, -293A-4 and -302A-4

-077A-4: In the temperature range +40…45 °C (+104…113 °F), the rated output current is derated by 1% for every added 1 °C (1.8 °F). In the temperature range +45…50 °C (+113…122 °F), the rated output current is derated by 2% for every added 1 °C (1.8 °F). The output current can be calculated by multiplying the current given in the rating table by the derating factor (k):

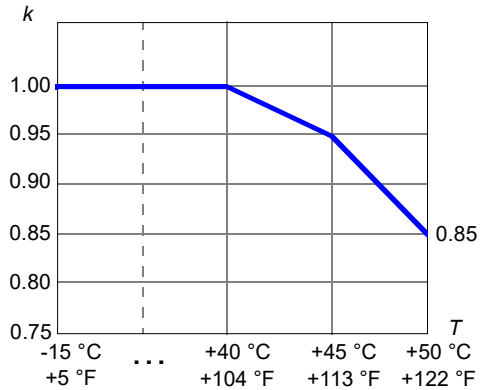

-260A-4 and -293A-4: (Not available in North America) In the temperature range +40…45 °C (+104…113 °F), the rated output current is derated by 1% for every added 1 °C (1.8 °F). In the temperature range +45…50 °C (+113…122 °F), the rated output current is derated by 2.5% for every added 1 °C (1.8 °F). The output current

can be calculated by multiplying the current given in the rating table by the derating factor (k):

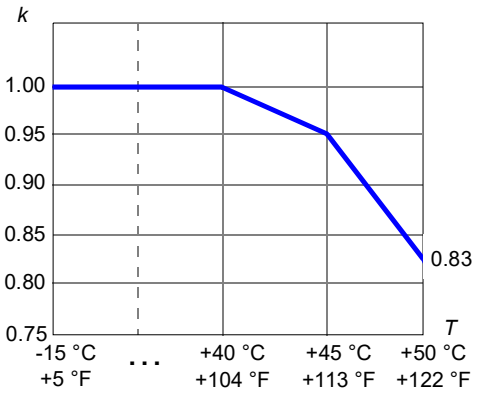

-302A-4: In the temperature range +40…50 °C (+104…122 °F), the rated output current is not derated at all.

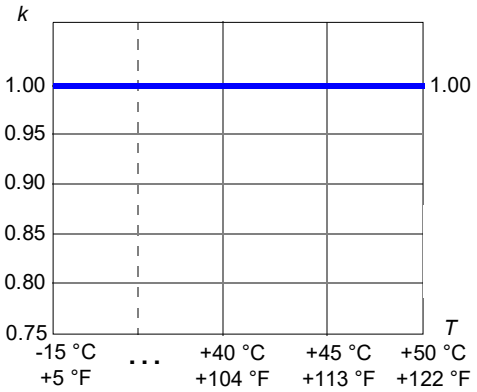

Altitude derating

In altitudes 1000…4000 m (3300…13120 ft) above sea level, the derating is 1% for every 100 m (330 ft).

Note: There are special considerations in corner-grounded installations above 2000 m. Contact your local ABB representative for further information.

The output current is calculated by multiplying the current given in the rating table by the derating factor k, which for x meters (1000 m ≤ x ≤ 4000 m) is:

$$k = 1 - \frac{1}{10\,000\ \text{m}} \cdot (x - 1000)\ \text{m}$$

Altitude and ambient temperature

If ambient temperature is below 40 °C (+104 °F), the derating can be reduced by 1.5% for every 1 °C (1.8 °F) reduction in temperature. A few altitude derating curves are shown below. For a more accurate derating, use the DriveSize dimensioning PC tool.

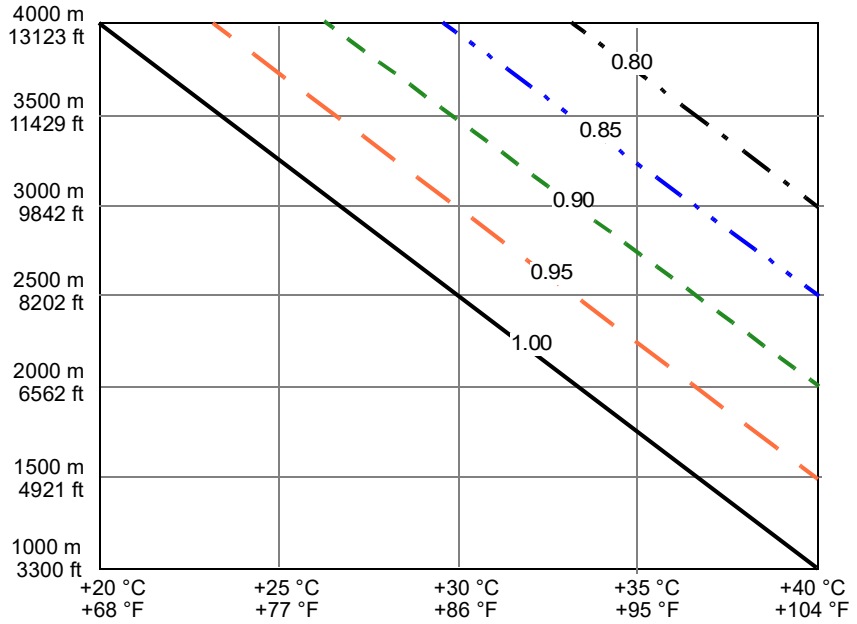

	Derating factor 1.00
	Derating factor 0.95
	Derating factor 0.9
	Derating factor 0.85
	Derating factor 0.80

The altitude derating can be reduced if the temperature is below +40 °C, for example, if the temperature is 30 °C, the derating factor is 1 - 1.5% · 10 = 0.85. You can reduce the output current by 35% instead of 40% at 4000 meter above the see level.

Note: Check the supply network compatibility restrictions above 2000 m (6562 ft), see *Installation site altitude* on page *296*. Check also PELV limitation on relay output terminals above 2000 m (6562 ft), see sections *Isolation areas, R1…R5* on page *292* and *Isolation areas, R6…R9* on page *293*.

Switching frequency derating

The output current is calculated by multiplying the current given in the rating table by the derating factor given in the table below.

Note: If you change the minimum switching frequency with parameter 97.02 Minimum switching frequency, derate according to the table below. Changing parameter 97.01 Switching frequency reference does not require derating.**IEC**

Frame size	IEC Type ACH580-01-	Derating factor (k) for the minimum switching frequencies				
		1 kHz	2 kHz	4kHz	8 kHz	12 kHz
3-phase U_N = 230 V						
R1	04A7-2...018A-2	1	1	1	0.89	0.80
R2	025A-2...032A-2	1	1	1	0.86	0.74
R3	047A-2...060A-2	1	1	1	0.85	0.72
R5	089A-2...115A-2	1	1	1	0.89	0.79
R6	144A-2	1	1	1	TBD	TBD
R7	171A-2...213A-2	1	1	1	TBD	TBD
R8	276A-2	1	1	1	TBD	TBD
3-phase U_N = 400 V						
R1	02A7-4…12A7-4	1	1	1	0.67	0.5
R2	018A-4…026A-4	1	1	1	0.65	0.48
R3	033A-4…046A-4	1	1	1	0.65	0.48
R4	062A-4	1	1	1	0.82	0.64
R4	073A-4	1	1	1	0.73	0.55
R5	088A-4…106A-4	1	1	1	0.71	0.57
R6	145A-4	1	0.97	0.84	0.66	0.52
R7	169A-4…206A-4	1	0.98	0.89	0.71	0.53
R8	246A-4…293A-4	1	0.96	0.82	0.61	0.45
R9	363A-4…430A-4	1	0.95	0.79	0.58	0.43

3AXD00000586715.xls L

UL (NEC)

Frame size	NEC Type ACH580-01-	Derating factor (k) for the minimum switching frequencies				
		1 kHz	2 kHz	4kHz	8 kHz	12 kHz
3-phase U_1 = 200...240 V, P_n at U_N = 208/230 V, 60 Hz						
R1	04A6-2...017A-2	1	1	1	0.89	0.80
R2	024A-2...031A-2	1	1	1	0.86	0.74
R3	046A-2...059A-2	1	1	1	0.85	0.72
R4	075A-2	1	1	1	0.86	0.74
R5	088A-2...114A-2	1	1	1	0.89	0.79
R6	143A-2	1	1	1	-	-
R7	169A-2...211A-2	1	1	1	-	-
R8	273A-2	1	1	1	-	-
3-phase U_1 = 440...480 V, P_n at U_N = 460 V, 60 Hz						
R1	02A1-4…012A-4	1	1	1	0.67	0.5
R2	014A-4…024A-4	1	1	1	0.65	0.48
R3	027A-4…044A-4	1	1	1	0.65	0.48
R4	052A-4…065A-4	1	1	1	0.82	0.64
R4	077A-4	1	1	1	0.73	0.55
R5	096A-4	1	1	1	0.71	0.57
R6	124A-4	1	1	1	0.66	0.52
R7	156A-4…180A-4	1	1	1	0.71	0.53
R8	240A-4	1	1	1	0.61	0.45
R8	260A-4	1	1	1	0.61	0.45
R9	302A-4	1	1	1	0.58	0.43
R9	361A-4…414A-4	1	1	0.79	0.58	0.43
3-phase U_1 = 500...600 V, P_n at U_N = 575 V, 60 Hz						
R2	02A7-6…017A-6	1	1	1	0.72	0.54
R3	022A-6…032A-6	1	1	1	0.70	0.50
R5	041A-6…077A-6	1	1	1	0.70	0.51
R7	099A-6…125A-6	1	1	TBD	TBD	TBD
R8	144A-6	1	1	TBD	TBD	TBD
R9	192A-6…271A-6	1	1	TBD	TBD	TBD

3AXD00000586715.xls L

Output frequency derating

Output frequency derating applies for ratings up to ACS/ACH/ACQ580-01-106A-4 (R5). Inverter output current is limited by the following factor k below 5 Hz absolute inverter output frequency f_abs.

k = 2/3 + 1/3 · (f_abs / 5 Hz)

Fuses (IEC)

gG as well as uR or aR fuses for protection against short-circuit in the input power cable or drive are listed below. Either fuse type can be used for frames R1…R9 if it operates rapidly enough. The operating time depends on the supply network impedance and the cross-sectional area and length of the supply cable.

Note 1: See also *Implementing short-circuit and thermal overload protection* on page *105*.

Note 2: Fuses with higher current rating than the recommended ones must not be used.

Note 3: Fuses from other manufacturers can be used if they meet the ratings and the melting curve of the fuse does not exceed the melting curve of the fuse mentioned in the table.

gG fuses (IEC)

Check on the fuse time-current curve to ensure the operating time of the fuse is below 0.5 seconds. Obey the local regulations.

Type ACH580-01-	Min. short-circuit current[1)]	Input current	gG (IEC 60269)				
			Nominal current	I^2t	Voltage rating	ABB type	IEC 60269 size
	A	A	A	A^2s	V		
3-phase U_N = 230 V							
04A7-2	200	4.7	25.0	2500.0	500	OFAF000H25	000
06A7-2	200	6.7	25.0	2500.0	500	OFAF000H25	000
07A6-2	200	7.6	25.0	2500.0	500	OFAF000H25	000
012A-2	200	12.0	25.0	2500.0	500	OFAF000H25	000
018A-2	200	16.9	25.0	2500.0	500	OFAF000H25	000
025A-2	320	24.5	40.0	7700.0	500	OFAF000H40	000
032A-2	320	31.2	40.0	7700.0	500	OFAF000H40	000
047A-2	500	46.7	63.0	20100.0	500	OFAF000H63	000
060A-2	500	60.0	63.0	20100.0	500	OFAF000H63	000
089A-2	1300	89.0	125.0	103000	500	OFAF00H125	00
115A-2	1300	115.0	125.0	103000	500	OFAF00H125	00
144A-2	1700	144.0	200	300000	500	OFAF0H200	0
171A-2	2300	171.0	250	600000	500	OFAF0H250	0
213A-2	3300	213.0	315	710000	500	OFAF1H315	1
276A-2	5500	276.0	400	1100000	500	OFAF2H400	2
3-phase U_N = 400 or 480 V							
02A7-4	32	2.6	4	55	500	OFAF000H4	000
03A4-4	48	3.3	6	110	500	OFAF000H6	000
04A1-4	48	4.0	6	110	500	OFAF000H6	000
05A7-4	80	5.6	10	360	500	OFAF000H10	000
07A3-4	80	7.2	10	360	500	OFAF000H10	000
09A5-4	128	9.4	16	740	500	OFAF000H16	000

Type ACH580-01-	Min. short-circuit current[1)]	Input current	gG (IEC 60269)				
			Nominal current	I^2t	Voltage rating	ABB type	IEC 60269 size
	A	A	A	A^2s	V		
12A7-4	128	12.6	16	740	500	OFAF000H16	000
018A-4	200	17.0	25	2500	500	OFAF000H25	000
026A-4	256	25.0	32	4000	500	OFAF000H32	000
033A-4	320	32.0	40	7700	500	OFAF000H40	000
039A-4	400	38.0	50	16000	500	OFAF000H50	000
046A-4	500	45.0	63	20100	500	OFAF000H63	000
062A-4	800	62	80	37500	500	OFAF000H80	000
073A-4	1000	73	100	65000	500	OFAF000H100	000
088A-4	1000	88	100	65000	500	OFAF000H100	000
106A-4	1300	106	125	103000	500	OFAF00H125	00
145A-4	1700	145	160	185000	500	OFAF00H160	00
169A-4	3300	169	250	600000	500	OFAF0H250	0
206A-4	5500	206	315	710000	500	OFAF1H315	1
246A-4	6400	246	355	920000	500	OFAF1H355	1
293A-4	7800	293	425	1300000	500	OFAF2H425	2
363A-4	9400	363	500	2000000	500	OFAF2H500	2
430A-4	10200	430	630	2800000	500	OFAF3H630	3

3AXD00000586715.xls L

[1)] Minimum short-circuit current of the installation

uR and aR fuses (IEC)

Type ACH580 -01-	Min. short-circuit current[1)]	Input current	uR or aR (DIN 43620 blade style)				
			Nominal current	I^2t	Voltage rating	Bussmann type	IEC 60269 size
	A	A	A	A^2s	V		
3-phase U_N = 230 V							
04A7-2	120.0	4.7	40.0	460.0	690	170M1563	000
06A7-2	120.0	6.7	40.0	460.0	690	170M1563	000
07A6-2	120.0	7.6	40.0	460.0	690	170M1563	000
012A-2	120.0	12.0	40.0	460.0	690	170M1563	000
018A-2	120.0	16.9	40.0	460.0	690	170M1563	000
025A-2	170.0	24.5	63.0	1450.0	690	170M1565	000
032A-2	170.0	31.2	63.0	1450.0	690	170M1565	000
047A-2	280.0	46.7	80.0	2550.0	690	170M1566	000
060A-2	280.0	60.0	80.0	2550.0	690	170M1566	000
089A-2	700.0	89.0	200.0	15000.0	690	170M3815	1
115A-2	700.0	115.0	200.0	15000.0	690	170M3815	1
144A-2	1000	144.0	315	46500	690	170M3817	1
171A-2	1280	171.0	450	105000	690	170M5809	2
213A-2	1450	213.0	500	155000	690	170M5810	2
276A-2	2050	276.0	630	220000	690	170M6810	3
3-phase U_N = 400 or 480 V							
02A7-4	65	2.6	25	130	690	170M1561	000
03A4-4	65	3.3	25	130	690	170M1561	000
04A1-4	65	4.0	25	130	690	170M1561	000
05A7-4	65	5.6	25	130	690	170M1561	000
07A3-4	65	7.2	25	130	690	170M1561	000
09A5-4	65	9.4	25	130	690	170M1561	000
12A7-4	65	12.6	25	130	690	170M1561	000
018A-4	120	17.0	40	460	690	170M1563	000
026A-4	120	25.0	40	460	690	170M1563	000
033A-4	170	32.0	63	1450	690	170M1565	000
039A-4	170	38.0	63	1450	690	170M1565	000
046A-4	280	45.0	80	2550	690	170M1566	000
062A-4	380	62	100	4650	690	170M1567	000
073A-4	480	73	125	8500	690	170M1568	000
088A-4	700	88	160	16000	690	170M1569	000
106A-4	1280	106	315	46500	690	170M3817	1
145A-4	1280	145	315	46500	690	170M3817	1
169A-4	1800	169	450	105000	690	170M5809	1
206A-4	2210	206	500	145000	690	170M5810	1
246A-4	3010	246	630	275000	690	170M5812	2
293A-4	4000	293	800	490000	690	170M6812D	2
363A-4	5550	363	1000	985000	690	170M6814D	2
430A-4	7800	430	1250	2150000	690	170M8554D	2

3AXD00000586715.xls L

[1)] Minimum short-circuit current of the installation

Type ACH580 -01-	Min. short-circuit current[1)]	Input current	uR or aR (DIN 43653 bolted tags)				
			Nominal current	I^2t	Voltage rating	Bussmann type	IEC 60269 size
	A	A	A	A^2s	V		
3-phase U_N = 400 or 480 V							
02A7-4	65	2.6	25	130	690	170M1311	000
03A4-4	65	3.3	25	130	690	170M1311	000
04A1-4	65	4.0	25	130	690	170M1311	000
05A7-4	65	5.6	25	130	690	170M1311	000
07A3-4	65	7.2	25	130	690	170M1311	000
09A5-4	65	9.4	25	130	690	170M1311	000
12A7-4	65	12.6	25	130	690	170M1311	000
018A-4	120	17.0	40	460	690	170M1313	000
026A-4	120	25.0	40	460	690	170M1313	000
033A-4	170	32.0	63	1450	690	170M1315	000
039A-4	170	38.0	63	1450	690	170M1315	000
046A-4	280	45.0	80	2550	690	170M1316	000
062A-4	380	62	100	4650	690	170M1417	000
073A-4	480	73	125	8500	690	170M1318	000
088A-4	700	88	160	16000	690	170M1319	000
106A-4	700	106	200	15000	690	170M3015	1
145A-4	1000	145	250	28500	690	170M3016	1
169A-4	1280	169	315	46500	690	170M3017	1
206A-4	1520	206	350	68500	690	170M3018	1
246A-4	2050	246	450	105000	690	170M5009	2
293A-4	2200	293	500	145000	690	170M5010	2
363A-4	3100	363	630	275000	690	170M5012	2
430A-4	3600	430	700	405000	690	170M5013	2

3AXD00000586715.xls L

[1)] Minimum short-circuit current of the installation

Circuit breakers (IEC)

This section does not apply to the North American market. See section *Fuses (UL)* for branch circuit protection on page *268*.

The protective characteristics of circuit breakers depend on the type, construction and settings of the breakers. There are also limitations pertaining to the short-circuit capacity of the supply network.

WARNING! Due to the inherent operating principle and construction of circuit breakers, independent of the manufacturer, hot ionized gases can escape from the breaker enclosure in case of a short-circuit. To ensure safe use, pay special attention to the installation and placement of the breakers. Obey the manufacturer's instructions.

You can use the circuit breakers listed below. Other circuit breakers can be used with drive if they provide the same electrical characteristics. ABB does not assume any liability whatsoever for the correct function and protection with circuit breakers not listed below. Furthermore, if the recommendations given by ABB are not obeyed, the drive can experience problems that the warranty does not cover.

Type ACH580 -01-	MCBs and MCCBs					
	ABB type	Max. short-circuit I_{sc}	Tmax frame XT / T class	Tmax rating	Electronic release	SACE ordering code for breaker and release unit
		kA	A	A	A	
3-phase U_N = 400 or 480 V						
02A7-4	S 203P-B/C/Z 10	20	N/A	N/A	N/A	N/A
03A4-4	S 203P-B/C/Z 10	20	N/A	N/A	N/A	N/A
04A1-4	S 203P-B/C/Z 10	20	N/A	N/A	N/A	N/A
05A7-4	S 203P-B/C/Z 10	20	N/A	N/A	N/A	N/A
07A3-4	S 203P-B/C/Z 10	20	N/A	N/A	N/A	N/A
09A5-4	S 203P-B/C/Z 10	20	N/A	N/A	N/A	N/A
12A7-4	S 203P-B/C/Z 16	20	N/A	N/A	N/A	N/A
018A-4	S 203P-B/C/Z 20	20	N/A	N/A	N/A	N/A
026A-4	S 203P-B/C/Z 25	20	N/A	N/A	N/A	N/A
033A-4	S 203P-B/C/Z 32	12	N/A	N/A	N/A	N/A
039A-4	S 203P-B/C/Z 40	12	N/A	N/A	N/A	N/A
046A-4	S 203P-B/C/Z 50	12	N/A	N/A	N/A	N/A
062A-4	S 803S-B/C 80	50	N/A	N/A	N/A	N/A
073A-4	S 803S-B/C 80	50	N/A	N/A	N/A	N/A
088A-4	S 803S-B/C 100	50	N/A	N/A	N/A	N/A
106A-4	S 803S-B/C 125	50	N/A	N/A	N/A	N/A

Type ACH580 -01-	MCBs and MCCBs					
	ABB type	Max. short-circuit I_{sc}	Tmax frame XT / T class	Tmax rating	Electronic release	SACE ordering code for breaker and release unit
		kA	A	A	**A**	
145A-4	XT4 L 250 Ekip LS/I In=250 3p F F	65	XT4	250	250	1SDA068555R1
169A-4	XT4 L 250 Ekip LS/I In=250 3p F F	65	XT4	250	250	1SDA068555R1
206A-4	T4 L 320 PR221DS-LS/I In=320 3p F F	65	T4	320	320	1SDA054141R1
246A-4	T5 L 400 PR221DS-LS/I In=400 3p F F	65	T5	400	400	1SDA054365R1
293A-4	T5 L 630 PR221DS-LS/I In=630 3p F F	65	T5	630	630	1SDA054420R1
363A-4	T5 L 630 PR221DS-LS/I In=630 3p F F	65	T5	630	630	1SDA054420R1
430A-4	T5 L 630 PR221DS-LS/I In=630 3p F F	65	T5	630	630	1SDA054420R1

3AXD00000586715.xls L

Fuses (UL)

The UL listed fuses in the table are the required branch circuit protection. Fuses are to be provided as part of the installation.

Note 1: Fuses are not included in the purchased drive and must be provided by others.

Note 2: Fuses with higher current rating than specified must not be used.

Note 3: Fuses with lower current rating than specified may be used if they are of the same class and voltage rating. It is the user's responsibility to verify that lower current rated fuses are compliant with local regulations and appropriate for the application.

Note 4: Drive fuses must be used to maintain the drive UL listing. Additional protection can be used. Refer to local codes and regulations.

UL/NEC type ACH580-01-	Input current	UL			
		Maximum current	Voltage rating	Bussmann type	UL class
	A	A	V		
3-phase U_1 = 200...240 V, P_n at U_N = 208/230 V, 60 Hz					
04A6-2	4.6	15	600	KTK-R-15 or JJS-15	CC or T
06A6-2	6.6	15	600	KTK-R-15 or JJS-15	CC or T
07A5-2	7.5	15	600	KTK-R-15 or JJS-15	CC or T
10A6-2	10.6	15	600	KTK-R-15 or JJS-15	CC or T
017A-2	16.7	30	600	KTK-R-30 or JJS-30	CC or T
024A-2	24.2	40	600	JJS-40	T
031A-2	30.8	40	600	JJS-40	T
046A-2	46.2	80	600	JJS-80	T
059A-2	59.4	80	600	JJS-80	T
075A-2	74.8	100	600	JJS-100	T
088A-2	88.0	150	600	JJS-150	T
114A-2	114.0	150	600	JJS-150	T
143A-2	143.0	200	600	JJS-200	T
169A-2	169.0	250	600	JJS-250	T
211A-2	211.0	300	600	JJS-300	T
273A-2	273.0	400	600	JJS-400	T
3-phase U_1 = 440...480 V, P_n at U_N = 460 V, 60 Hz					
02A1-4	2.1	15	600	JJS-15	T
03A0-4	3.0	15	600	JJS-15	T
03A5-4	3.5	15	600	JJS-15	T
04A8-4	4.8	15	600	JJS-15	T
07A6-4	7.6	15	600	JJS-15	T
012A-4	12.0	15	600	JJS-15	T
014A-4	14.0	30	600	JJS-30	T
023A-4	23.0	30	600	JJS-30	T
027A-4	27.0	40	600	JJS-40	T
034A-4	34.0	60	600	JJS-60	T
044A-4	44.0	60	600	JJS-60	T

UL/NEC type ACH580-01-	Input current	UL			
		Maximum current	Voltage rating	Bussmann type	UL class
	A	A	V		
052A-4	52	80	600	JJS-80	T
065A-4	62	100	600	JJS-100	T
077A-4	77	100	600	JJS-100	T
096A-4	106	150	600	JJS-150	T
124A-4	124	200	600	JJS-200	T
156A-4	156	225	600	JJS-225	T
180A-4	180	300	600	JJS-300	T
240A-4	240	350	600	JJS-350	T
302A-4	302	500	600	JJS-500	T
361A-4	361	500	600	JJS-500	T
414A-4	414	600	600	JJS-600	T
3-phase U_1 = 500...600 V, P_n at U_N = 575 V, 60 Hz					
02A7-6	2.7	15	600	KTK-R-15 or JJS-15	CC or T
03A9-6	3.9	15	600	KTK-R-15 or JJS-15	CC or T
06A1-6	6.1	15	600	KTK-R-15 or JJS-15	CC or T
09A0-6	9.0	15	600	KTK-R-15 or JJS-15	CC or T
11A0-6	11.0	15	600	KTK-R-15 or JJS-15	CC or T
17A0-6	17.0	30	600	KTK-R-30 or JJS-30	CC or T
022A-6	22.0	40	600	JJS-40	T
027A-6	27.0	40	600	JJS-40	T
032A-6	32.0	40	600	JJS-40	T
041A-6	41.0	100	600	JJS-100	T
052A-6	52.0	100	600	JJS-100	T
062A-6	62.0	100	600	JJS-100	T
077A-6	77.0	100	600	JJS-100	T
099A-6	99.0	150	600	JJS-150	T
125A-6	125.0	200	600	JJS-200	T
144A-6	144.0	250	600	JJS-250	T
192A-6	192.0	300	600	JJS-300	T
242A-6	242.0	400	600	JJS-400	T
271A-6	271.0	400	600	JJS-400	T

3AXD00000586715.xls L

Dimensions, weights and free space requirements

Frame size	Dimensions and weights													
	IP21							UL Type 1						
	H1 mm	H2 mm	H3 mm	H4 mm	W mm	D mm	Weight kg	H1 in	H2 in	H3 in	H4 in	W in	D in	Weight lb
R1	N/A	N/A	373	331	125	223	4.6	N/A	N/A	14.69	13.03	4.92	8.78	10.1
R2	N/A	N/A	473	432	125	229	6.6	N/A	N/A	18.62	17.01	4.92	9.00	14.6
R3	N/A[1)]	N/A[1)]	454	490	203	229	11.8	N/A[1)]	N/A[1)]	17.87	19.29	7.99	9.02	26.0
R4	N/A[1)]	N/A[1)]	600	636	203	257	19.0	N/A[1)]	N/A[1)]	23.62	25.04	7.99	10.12	41.9
R5	596	596	732	633	203	295	28.3	23.46	23.46	28.82	24.90	7.99	11.61	62.4
R6	548	549	727	589	252	369	42.4	21.57	21.63	28.62	23.20	9,92	14.53	93.5
R7	600	601	880	641	284	370	54	23.62	23.67	34.65	25.25	11.18	14.57	119.1
R8	680	677	965	721	300	393	69	26.77	23.67	37.99	28.39	11.81	15.47	152.2
R9	680	680	955	741	380	418	97	26.77	26.77	37.60	29.19	14.96	16.46	213.9

[1)] Frames with an integrated cable/conduit box

3AXD00000586715.xls L

IP21 (UL Type 1), R3…R4

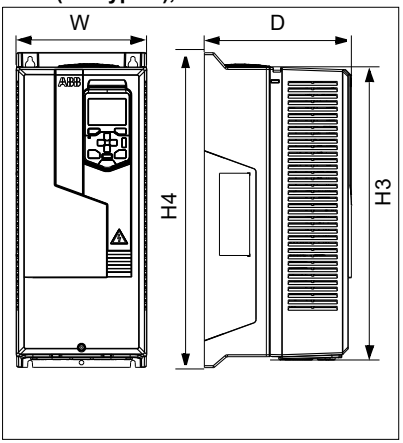

IP21 (UL Type 1), R5…R9

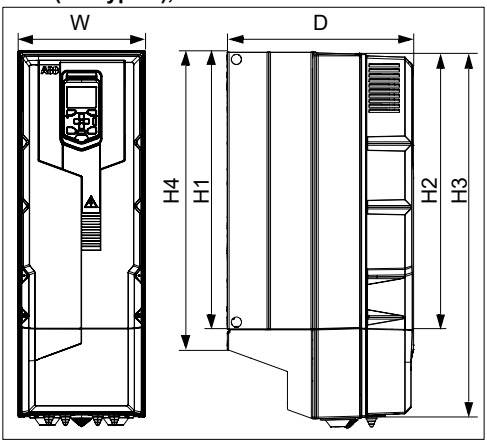

Symbols

IP21 / UL Type 1

H1 R5.…R9: Height back without cable/conduit box

H2 R5.…R9: Height front without cable/conduit box

H3 R3.…R4: Height front, R1…R2, R5.…R9: Height front with cable/conduit box

H4 R1.…R4: Height back, R5.…R9: Height back with cable/conduit box

W Width

D Depth

IP21 (UL Type 1) & IP55 (UL Type 12), R1…R2

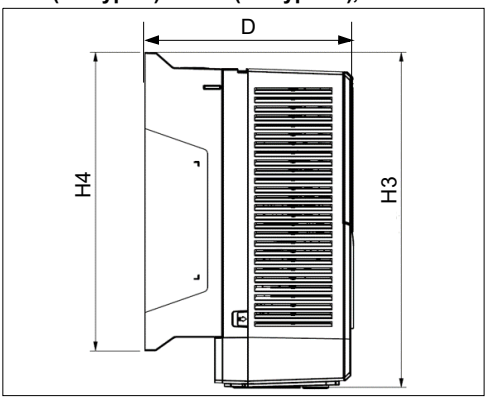

Frame size	Dimensions and weights												
	IP55					UL Type 12							
	H3 mm	H4 mm	W mm	D mm	Weight kg	H3 in	H4 in	H5 in	W in	D in	Weight lb	HH in	HW in
R1	403	331	128	233	4.8	15.87	13.03	17.78	5.04	9.17	10.58	2.56	5.09
R2	503	432	128	239	6.8	19.80	17.01	21.49	5.04	9.41	14.99	2.56	5.10
R3	456	490	206	237	13.0	17.95	19.29	20.93	8.11	9.33	28.67	2.52	8.16
R4	600	636	203	265	20.0	23.62	25.04	27.03	7.99	10.43	44.10	2.83	8.59
R5	732	633	203	320	29.0	28.82	24.90	32.01	7.99	12.60	63.95	3.15	8.58
R6	727	589	252	380	43.0	28.62	23.20	34.81	9.92	14.96	94.82	6.10	11.46
R7	880	641	284	381	56	34.65	25.25	40.86	11.18	15.00	123.48	6.10	13.00
R8	965	721	300	452	77	37.99	28.39	44.23	11.81	17.80	169.79	6.10	13.80
R9	955	741	380	477	103	37.60	29.19	46.75	14.96	18.78	227.12	9.06	16.95

3AXD00000586715.xls L

IP55 (UL Type 12[1]), R3…R4

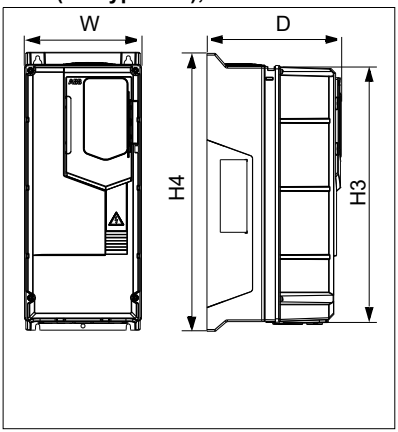

IP55 (UL Type 12[1]), R5…R9

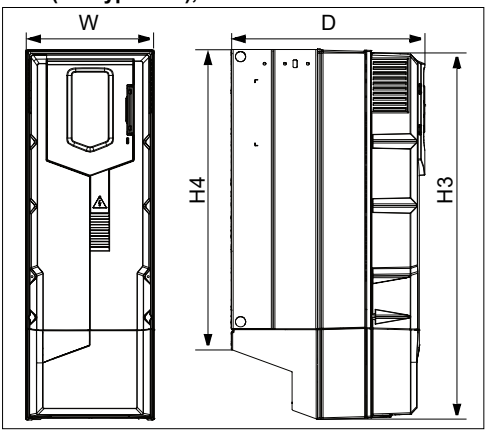

UL Type 12, R1…R2

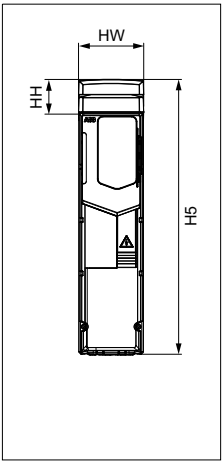

UL Type 12, R3

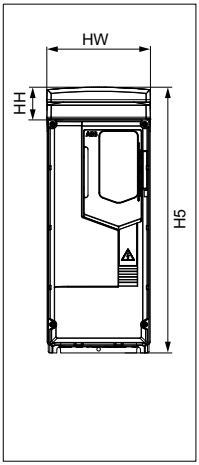

UL Type 12, R4…R5

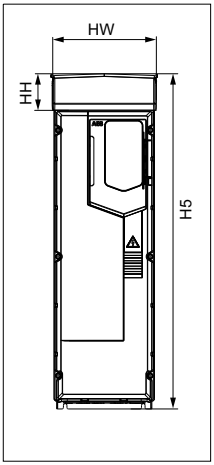

UL Type 12, R6…R9

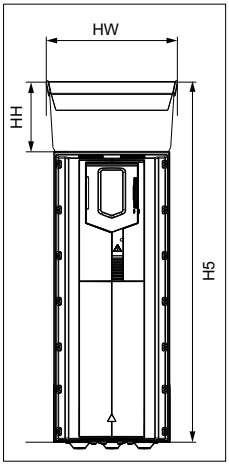

Symbols

IP55 / UL Type 12 [1]without hood

H3 R3.…R4: Height front, R1…R2 [2] and R5.…R9: Height front with cable/conduit box

H4 R3.…R4: Height back, R1…R2 [2] and R5.…R9: Height back with cable/conduit box

H5 Height with hood (UL Type 12 only)

W Width

D Depth

HH Hood height

HW Hood width

[2] See H3 and H4 location for R1…R2 in the figure on *270*

Frame size	Dimensions and weights with main switch and EMC C1 filter options (+F278, +F316, +E223), IP55									
	H3		H4		W		D		Weight	
	mm	in	mm	in	mm	in	mm	in	kg	lb
R1	403	15.87	331	13.03	128	5.04	255	10.03	5.4	11.82
R2	503	19.80	432	17.01	128	5.04	257	10.12	7.4	16.41
R3	733	28.86	519	20.43	207	8.15	258	10.16	15.0	33.08
R4	879	34.61	665	26.18	206	8.11	286	11.26	23.3	51.50
R5	1023	40.28	626	24.65	203	7.99	342	13.46	33.0	72.77

3AXD00000586715.xls L

For the symbols see page *272*.

Frame size	Free space, IP21 (UL Type 1)											
	Vertical mounting stand alone						Vertical mounting side by side					
	Above		Below[1)]		Beside		Above		Below[1)]		Between	
	mm	in	mm	in	mm	in	mm	in	mm	in	mm	in
R1	150	5.91	86	3.39	150	5.91	200	7.87	200	7.87	0	0
R2	150	5.91	86	3.39	150	5.91	200	7.87	200	7.87	0	0
R3	200	7.87	53	2.09	150	5.91	200	7.87	200	7.87	0	0
R4	53	2.09	200	7.87	150	5.91	200	7.87	200	7.87	0	0
R5	100	3.94	200	7.87	150	5.91	200	7.87	200	7.87	0	0
R6	155	6.10	300	11.81	150	5.91	200	7.87	300	11.81	0	0
R7	155	6.10	300	11.81	150	5.91	200	7.87	300	11.81	0	0
R8	155	6.10	300	11.81	150	5.91	200	7.87	300	11.81	0	0
R9	200	7.87	300	11.81	150	5.91	200	7.87	300	11.81	0	0

3AXD00000586715.xls L

1) Free space below is always measured from the drive frame, not from the cable box.

Frame size	Free space, IP21 (UL Type 1)[1)]					
	Horizontal mounting					
	Above[2)]		Below[2,3)]		Between[2)]	
	mm	in	mm	in	mm	in
R1	150	5.91	86	3.39	30/200	1.18/7.87
R2	150	5.91	86	3.39	30/200	1.18/7.87
R3	200	7.87	53	2.09	30/200	1.18/7.87
R4	30	1.18	200	7.87	30/200	1.18/7.87
R5	30	1.18	200	7.87	30/200	1.18/7.87

3AXD00000586715.xls L

1) **Note:** Horizontal installation meets IP20 requirements only.
2) For definition, see the figure on page *57*.
3) Free space below is always measured from the drive frame, not from the cable box.

Frame size	Free space, IP55 (UL Type 12)											
	Vertical mounting stand alone						Vertical mounting side by side					
	Above		Below[1)]		Beside		Above		Below[1)]		Between	
	mm	in	mm	in	mm	in	mm	in	mm	in	mm	in
R1	137	5.39	116	4.57	150	5.91	200	7.87	200	7.87	0	0
R2	137	5.39	116	4.57	150	5.91	200	7.87	200	7.87	0	0
R3	200	7.87	53	2.0	150	5.91	200	7.87	200	7.87	0	0
R4	53	2.0	200	7.87	150	5.91	200	7.87	200	7.87	0	0
R5	100	3.94	200	7.87	150	5.91	200	7.87	200	7.87	0	0
R6	155	6.10	300	11.81	150	5.91	200	7.87	300	11.81	0	0
R7	155	6.10	300	11.81	150	5.91	200	7.87	300	11.81	0	0
R8	155	6.10	300	11.81	150	5.91	200	7.87	300	11.81	0	0
R9	200	7.87	300	11.81	150	5.91	200	7.87	300	11.81	0	0

3AXD00000586715.xls L

1) Free space below is always measured from the drive frame, not from the cable box.

Frame size	Free space, IP55 (UL Type 12)[1)]					
	Horizontal mounting					
	Above[3)]		Below[2,3)]		Between[3)]	
	mm	in	mm	in	mm	in
R1	137	5.39	116	4.57	30/200	1.18/7.87
R2	137	5.39	116	4.57	30/200	1.18/7.87
R3	200	7.87	53	2.09	30/200	1.18/7.87
R4	30	1.18	200	7.87	30/200	1.18/7.87
R5	30	1.18	200	7.87	30/200	1.18/7.87

3AXD00000586715.xls L

1) **Note:** IP55/Type 12 drive mounted horizontally meet IP21/Type 1 ratings.
2) For definition, see the figure on page *57*.
3) Free space below is always measured from the drive frame, not from the cable box.

See the figures in section *Checking the installation site* on page *54*.

Note: IP55 (UL Type 12) does not imply that the drive can be installed outside/outdoors. To install outside, contact your local ABB representative directly for specific instructions (3AXD10000425906). The warranty will be void if installed outdoors without using these special instructions.

Losses, cooling data and noise

The air flow direction is from bottom to top.

Cooling air flow, heat dissipation and noise for stand-alone drives

The table below specifies the heat dissipation in the main circuit at nominal load and in the control circuit with minimum load (I/O, options and panel not in use) and maximum load (all digital inputs and relays in the ON state, and the panel, fieldbus and fan in use). The total heat dissipation is the sum of the heat dissipation in the main and control circuits. Use the maximum heat dissipation when designing cabinet or electrical room cooling needs.

IEC

Type ACH580 -01-	Heat dissipation				Air flow		Noise	Frame size
	Main circuit at rated I_1 at I_N	Control circuit minimum	Control circuit maximum	Main and control boards maximum				
	W	W	W	W	m^3/h	CFM	dB(A)	
3-phase U_N = 230 V								
04A7-2	23	3.5	25.0	45	43	25	59	R1
06A7-2	30	3.5	25.0	55	43	25	59	R1
07A6-2	41	3.5	25.0	66	43	25	59	R1
012A-2	81	3.5	25.0	106	43	25	59	R1
018A-2	108	3.5	25.0	133	43	25	59	R1
025A-2	149	3.5	25.0	174	101	59	64	R2
032A-2	203	3.5	25.0	228	101	59	64	R2
047A-2	297	3.5	25.0	322	179	105	76	R3
060A-2	405	3.5	25.0	430	179	105	76	R3
089A-2	594	3.5	25.0	619	139	82	63	R5
115A-2	810	3.5	25.0	835	139	82	63	R5
144A-2	999	4.1	36.0	1035	435	256	67	R6
171A-2	1215	4.1	36.0	1251	450	265	67	R7
213A-2	1485	4.1	36.0	1521	450	265	67	R7
276A-2	2025	4.1	36.0	2061	550	324	65	R8
3-phase U_N = 400 or 480 V								
02A7-4	20	3.5	25	45	43	25	59	R1
03A4-4	30	3.5	25	55	43	25	59	R1
04A1-4	41	3.5	25	66	43	25	59	R1
05A7-4	59	3.5	25	84	43	25	59	R1
07A3-4	81	3.5	25	106	43	25	59	R1
09A5-4	108	3.5	25	133	43	25	59	R1
12A7-4	149	3.5	25	174	43	25	59	R1
018A-4	203	3.5	25	228	101	59	64	R2
026A-4	297	3.5	25	322	101	59	64	R2
033A-4	405	3.5	25	430	179	105	76	R3
039A-4	500	3.5	25	525	179	105	76	R3
046A-4	594	3.5	25	619	179	105	76	R3

Type ACH580 -01-	Heat dissipation				Air flow		Noise	Frame size
	Main circuit at rated I_1 at I_N	Control circuit minimum	Control circuit maximum	Main and control boards maximum				
	W	W	W	W	m^3/h	CFM	dB(A)	
062A-4	810	3.5	25	835	134	79	69	R4
073A-4	999	3.5	25	1024	134	79	69	R4
088A-4	1215	3.5	25	1240	139	82	63	R5
106A-4	1485	3.5	25	1510	139	82	63	R5
145A-4	1440	4.1	36	1476	435	256	67	R6
169A-4	1940	4.1	36	1976	450	265	67	R7
206A-4	2310	4.1	36	2346	450	265	67	R7
246A-4	3300	4.1	36	3336	550	324	65	R8
293A-4	3900	4.1	36	3936	550	324	65	R8
363A-4	4800	4.1	36	4836	1150	677	68	R9
430A-4	6000	4.1	36	6036	1150	677	68	R9

3AXD00000586715.xls L

UL (NEC)

Type ACH580 -01-	Heat dissipation					Air flow		Noise	Frame size
	Main circuit at rated I_1 at I_{Ld}	Control circuit minimum	Control circuit maximum	Main and control boards maximum					
	W	W	W	W	BTU/h	m^3/h	CFM	dB(A)	
3-phase U_1 = 200...240 V, P_n at U_N = 208/230 V, 60 Hz									
04A6-2	20	3.5	25	45	155	43	25	59	R1
06A6-2	30	3.5	25	55	187	43	25	59	R1
07A5-2	41	3.5	25	66	224	43	25	59	R1
10A6-2	59	3.5	25	84	288	43	25	59	R1
017A-2	108	3.5	25	133	454	43	25	59	R1
024A-2	149	3.5	25	174	593	101	59	64	R2
031A-2	203	3.5	25	228	777	101	59	64	R2
046A-2	297	3.5	25	322	1100	179	105	76	R3
059A-2	405	3.5	25	430	1469	179	105	76	R3
075A-2	500	3.5	25	525	1791	288	170	69	R4
088A-2	594	3.5	25	619	2114	139	82	63	R5
114A-2	810	3.5	25	835	2852	139	82	63	R5
143A-2	999	4.1	36	1035	3535	435	256	67	R6
169A-2	1215	4.1	36	1251	4272	450	265	67	R7
211A-2	1485	4.1	36	1521	5194	450	265	67	R7
273A-2	2025	4.1	36	2061	7039	550	324	65	R8
3-phase U_1 = 440...480 V, P_n at U_N = 460 V, 60 Hz									
02A1-4	20	3.5	25	45	155	43	25	59	R1
03A0-4	30	3.5	25	55	187	43	25	59	R1
03A5-4	41	3.5	25	66	224	43	25	59	R1
04A8-4	59	3.5	25	84	288	43	25	59	R1
07A6-4	108	3.5	25	133	454	43	25	59	R1
012A-4	149	3.5	25	174	593	43	25	59	R1
014A-4	203	3.5	25	228	777	101	59	64	R2
023A-4	297	3.5	25	322	1100	101	59	64	R2
027A-4	405	3.5	25	430	1469	179	105	76	R3
034A-4	500	3.5	25	525	1791	179	105	76	R3
044A-4	594	3.5	25	619	2114	179	105	76	R3
052A-4	810	3.5	25	835	2852	134	79	69	R4
065A-4	999	3.5	25	1024	3497	134	79	69	R4
077A-4	1215	3.5	25	1240	4235	288	170	63	R4
096A-4	1485	3.5	25	1510	5157	139	82	63	R5
124A-4	1440	4.1	36	1476	5041	435	256	67	R6
156A-4	1940	4.1	36	1976	6748	450	265	67	R7
180A-4	2310	4.1	36	2346	8012	450	265	67	R7
240A-4	3300	4.1	36	3336	11393	550	324	65	R8
302A-4	3900	4.1	36	3936	13442	550	324	68	R9
361A-4	4800	4.1	36	4836	16516	1150	677	68	R9
414A-4	6000	4.1	36	6036	20614	1150	677	68	R9
3-phase U_1 = 500...600 V, P_n at U_N = 575 V, 60 Hz									
02A7-6	41	3.5	25	66	224	101	59	64	R2

Type ACH580 -01-	Heat dissipation					Air flow		Noise	Frame size
	Main circuit at rated I_1 at I_{Ld}	Control circuit minimum	Control circuit maximum	Main and control boards maximum					
	W	W	W	W	BTU/h	m^3/h	CFM	dB(A)	
03A9-6	59	3.5	25	84	288	101	59	64	R2
06A1-6	108	3.5	25	133	454	101	59	64	R2
09A0-6	149	3.5	25	174	593	101	59	64	R2
11A0-6	203	3.5	25	228	777	101	59	64	R2
017A-6	297	3.5	25	322	1100	101	59	64	R2
022A-6	405	3.5	25	430	1469	179	105	75	R3
027A-6	500	3.5	25	525	1791	179	105	75	R3
032A-6	594	3.5	25	619	2114	179	105	75	R3
041A-6	810	3.5	25	835	2852	139	82	63	R5
052A-6	999	3.5	25	1024	3497	139	82	63	R5
062A-6	1215	3.5	25	1240	4235	139	82	63	R5
077A-6	1485	3.5	25	1510	5157	139	82	63	R6
099A-6	2025	4.1	36	2061	7039	450	265	67	R7
125A-6	2430	4.1	36	2466	8422	450	265	67	R7
144A-6	2970	3.5	36	3006	10266	550	324	65	R8
192A-6	4050	4.1	36	4086	13954	1150	677	68	R9
242A-6	4860	4.1	36	4896	16721	1150	677	68	R9
271A-6	4860	4.1	36	4896	16721	1150	677	68	R9

3AXD00000586715.xls L

Cooling air flow and heat dissipation for flange mounting (option +C135)

Flange mounting kit is ordered separately in North America, not with a plus code.

IEC

Type ACH580 -01-	Heat dissipation (+C135)		Air flow (+C135)				Frame size
	Heatsink	Front	Heatsink		Front		
	W	W	m^3/h	CFM	m^3/h	CFM	
3-phase U_N = 400 or 480 V							
145A-4	1251	189	435	256	52	31	R6
169A-4	1701	239	450	265	75	44	R7
206A-4	2034	276	450	265	75	44	R7
246A-4	2925	375	550	324	120	71	R8
293A-4	3465	435	550	324	120	71	R8
363A-4	4275	525	1150	677	170	100	R9
430A-4	5355	645	1150	677	170	100	R9

3AXD00000586715.xls L

UL (NEC)

Type ACH580 -01-	Heat dissipation (with flange kit)		Air flow (with flange kit)				Frame size
	Heatsink	Front	Heatsink		Front		
	W	W	m^3/h	CFM	m^3/h	CFM	
3-phase U_1 = 440...480 V, P_n at U_N = 460 V, 60 Hz							
124A-4	1251	189	435	256	52	31	R6
156A-4	1701	239	450	265	75	44	R7
180A-4	2034	276	450	265	75	44	R7
240A-4	2925	375	550	324	120	71	R8
302A-4	3072	391	1150	677	170	100	R9
361A-4	4275	525	1150	677	170	100	R9
414A-4	5355	645	1150	677	170	100	R9

3AXD00000586715.xls L

Terminal and lead-through data for the power cables

IEC

Input, motor, resistor and DC cable lead-throughs, maximum wire sizes (per phase) and terminal screw sizes and tightening torques (*T*) are given below.

Frame size	Cable lead-through		L1, L2, L3, T1/U, T2/V, T3/W terminals			Grounding terminals	
	Per cable type	Ø[1]	Min wire size (solid/ stranded)[3]	Max wire size (solid/ stranded)	*T*	Max wire size	*T*
	pcs	mm	mm^2	mm^2	N·m	mm^2	N·m
3-phase U_N = 230 V							
R1	1	30	0.2/0.2	6/4	1.0	16/16	1.5
R2	1	30	0.5/0.5	16/16	1.5	16/16	1.5
R3	1	30	0.5/0.5	35/35	3.5	35/35	1.5
R5	1	45	6	70	5.6	-	2.2
R6	1	45	25	150	30	180	9.8
R7	1	54	95	240	40	180	9.8
R8	2	45	2×50	2×150	40	2×180	9.8
3-phase U_N = 400 or 480 V							
R1	1	30	0.20/0.25	6/4	1.0	16/16	1.5
R2	1	30	0.5/0.5	16/16	1.5	16/16	1.5
R3	1	30	0.5/0.5	35/25	3.5	35/35	1.5
R4	1	45	0.5/0.5	50	4.0	35/35	1.5
R5	1	45	6	70	5.6	35/35[2]	2.9
R6	1	45	25	150	30	-[2]	2.2
R7	1	54	95	240	40	-	-
R8	2	45	2×50	2×150	40	-	-
R9	2	54	2×95	2×240	70	-	-

3AXD00000586715.xls L

[1] Maximum cable diameter accepted. For the lead-through plate hole diameters, see chapter *Dimension drawings* on page *309*.
[2] Either cable lug (R5, see page *135*) or clamp (R6…R9, see page *139*) is used for grounding.
[3] **Note:** Minimum wire size does not necessarily have enough current capability for full load. Make sure the installation complies with local laws and regulations.
Note: For the tightening torques of the grounding terminals, see sections *Connection procedure, frames R1…R4* on page *124*, *Connection procedure, frame R5* on page *131* and *Connection procedure, frames R6…R9* on page *137*.

Frame size	Cable lead-through		R+, R-, UDC+ and UDC- terminals			
	Per cable type	Ø[1]	Min wire size (solid/ stranded)[3]	Max wire size (solid/ stranded)	*T*	
					Screw/ Bolt	
	pcs	mm	mm^2	mm^2		N·m
3-phase U_N = 230 V						
R1	1	23	0.2/0.2	6/4	[2]	1.0
R2	1	23	0.5/0.5	16/16	[2]	1.5
R3	1	30	0.5/0.5	35/35	[2]	3.5
R5	1	39	6	70	M5	5.6
R6	1	45	25	150	M8	30
R7	1	54	95	240	M10	30
R8	2	45	2×50	2×150	M10	40
3-phase U_N = 400 or 480 V						
R1	1	23	0.20/0.25	6/4	[2]	1.0
R2	1	23	0.5/0.5	16/16	[2]	1.5
R3	1	23	0.5/0.5	35/25	[2]	3.5
R4	1	39	0.5/0.5	50	[2]	4.0
R5	1	39	6	70	M5	5.6
R6	1	45	25	150	M8	30
R7	1	54	95	240	M10	30
R8	2	45	2×50	2×150	M10	40
R9	2	54	2×95	2×240	M12	70

3AXD00000586715.xls L

[1] Maximum cable diameter accepted. For the lead-through plate hole diameters, see chapter *Dimension drawings* on page *309*.
[2] See the table below.
[3] **Note:** Minimum wire size does not necessarily have enough current capability for full load. Make sure the installation complies with local laws and regulations.

Frame size	Screwdrivers for the terminals of the main circuit
R1	Combo: Slot 4 mm and PH1
R2	Combo: Slot 4.5 mm and PH2
R3, R4	PH2

3AXD00000586715.xls L

UL (NEC)

Input, motor, resistor and DC cable lead-throughs, maximum wire sizes (per phase) and terminal screw sizes and tightening torques (*T*) are given below.

Frame size	Cable lead-through		L1, L2, L3, T1/U, T2/V, T3/W terminals			Grounding terminals		
	Per cable type	Ø[1]	Wire range stranded/solid[3]		*T*	Wire range stranded/solid[3]		*T*
			Min	Max		Min	Max	
	pcs	in	AWG	AWG	lbf·ft	AWG	AWG	lbf·ft
3-phase U_1 = 200...240 V, P_n at U_N = 208/230 V, 60 Hz								
R1	1	30	24	10	1.0	18	6	1.1
R2	1	30	20	6	1.5	18	6	1.1
R3	1	30	20	2	3.5	18	2	1.1
R4	1	45	20	1	4.0	18	2	2.1
R5	1	45	10	2/0	5.6	[2]	[2]	1.6
R6	1	45	4	300 MCM	30	[2]	[2]	7.2
R7	1	54	3/0	500MCM	40	[2]	[2]	7.2
R8	2	45	2×1/0	2×300MCM	40	[2]	[2]	7.2
3-phase U_1 = 440...480 V, P_n at U_N = 460 V, 60 Hz								
R1	1	1.18	24	10	0.7	18	6	1.1
R2	1	1.18	20	6	1.1	18	6	1.1
R3	1	1.18	20	2	2.6	24	2	1.1
R4	1	1.77	20	1	3.0	12	2	2.1
R5	1	1.77	10	2/0	4.1	[2]	[2]	1.6
R6	1	1.77	4	300 MCM	22.1	[2]	[2]	7.2
R7	1	2.13	3/0	500 MCM	29.5	[2]	[2]	7.2
R8	2	1.77	2×1/0	2×300 MCM	29.5	[2]	[2]	7.2
R9	2	2.13	2×3/0	2×500 MCM	51.6	[2]	[2]	7.2
3-phase U_1 = 500...600 V, P_n at U_N = 575 V, 60 Hz								
R2	1	30	20	6	1.5	18	6	1.1
R3	1	30	20	2	3.5	18	6	1.1
R5	1	45	10	2/0	5.6	[2]	[2]	1.6
R7	1	54	3/0	500 MCM	40	[2]	[2]	7.2
R8	2	45	2×1/0	2×300MCM	40	[2]	[2]	7.2
R9	2	54	2×3/0	2×500 MCM	70	[2]	[2]	7.2

3AXD00000586715.xls L

[1] Maximum cable diameter accepted. For the lead-through plate hole diameters, see chapter *Dimension drawings* on page *309*.

[2] Either cable lug, not provided (R5, see page *187*) or cable clamp (R6…R9, see page *192*) is used for grounding.

[3] **Note:** Minimum wire size does not necessarily have enough current capability for full load. Make sure the installation complies with local laws and regulations.

Note: For the tightening torques of the grounding terminals, see sections *Connection procedure, frames R1…R4* on page *180*, *Connection procedure, frame R5* on page *185* and *Connection procedure, frames R6…R9* on page *190*.

Frame size	Cable lead-through		R+, R-, UDC+ and UDC- terminals			
	Per cable type	Ø[1]	Wire range stranded/solid[3]		*T*	
			Min	Max	Screw/ Bolt	
	pcs	in	AWG	AWG		lbf·ft
3-phase U_1 = 200...240 V, P_n at U_N = 208/230 V, 60 Hz						
R1	1	0.906	24	10	[2]	0.7
R2	1	0.906	20	6	[2]	1.1
R3	1	1.18	20	2	[2]	2.6
R4	1	1.54	50	1	[2]	3.0
R5	1	1.54	10	2/0	M5	4.1
R6	1	1.77	4	300 MCM	M8	22.1
R7	1	2.13	3/0	500 MCM	M10	29.5
R8	2	1.77	2×1/0	2×300 MCM	M10	29.5
3-phase U_1 = 440...480 V, P_n at U_N = 460 V, 60 Hz						
R1	1	0.906	24	10	[2]	0.7
R2	1	0.906	20	6	[2]	1.1
R3	1	0.906	20	2	[2]	2.6
R4	1	1.54	50	1	[2]	3.0
R5	1	1.54	10	2/0	M5	4.1
R6	1	1.77	4	300 MCM	M8	22.1
R7	1	2.13	3/0	500 MCM	M10	29.5
R8	2	1.77	2×1/0	2×300 MCM	M10	29.5
R9	2	2.13	2×3/0	2×500 MCM	M12	51.6
3-phase U_1 = 500...600 V, P_n at U_N = 575 V, 60 Hz						
R2	1	0.906	20	6	[2]	1.1
R3	1	1.18	20	2	[2]	2.6
R5	1	1.54	10	2/0	M5	4.1
R7	1	2.13	3/0	500 MCM	M10	29.5
R8	2	1.77	2×1/0	2×300 MCM	M10	29.5
R9	2	2.13	2×3/0	2×500 MCM	-	51.6

3AXD00000586715.xls L

[1] Maximum cable diameter accepted. For the lead-through plate hole diameters, see chapter *Dimension drawings* on page *309*.
[2] See the table below.
[3] **Note:** Minimum wire size does not necessarily have enough current capability for full load. Make sure the installation complies with local laws and regulations.

Frame size	Screwdrivers for the terminals of the main circuit
R1	Combo: Slot 4 mm and PH1
R2	Combo: Slot 4.5 mm and PH2
R3, R4	PH2

3AXD00000586715.xls L

Terminal and lead-through data for the control cables

IEC

Control cable lead-throughs, wire sizes and tightening torques (*T*) are given below.

Frame size	Cable lead-through		Control cable entries and terminal sizes			
	Holes	Max cable size	+24V, DCOM, DGND, EXT. 24V terminals		DI, AI/O, AGND, RO, STO terminals	
			Wire size	*T*	Wire size	*T*
	pcs	mm	mm^2	N·m	mm^2	N·m
3-phase U_N = 230 V						
R1	3	17	0.2…2.5	0.5…0.6	0.14…1.5	0.5…0.6
R2	3	17	0.2…2.5	0.5…0.6	0.14…1.5	0.5…0.6
R3	3	17	0.2…2.5	0.5…0.6	0.14…1.5	0.5…0.6
R5	3	17	0.2…2.5	0.5…0.6	0.14…1.5	0.5…0.6
R6	4	17	0.14…2.5	0.5…0.6	0.14…1.5	0.5…0.6
R7	4	17	0.14…2.5	0.5…0.6	0.14…1.5	0.5…0.6
R8	4	17	0.14…2.5	0.5…0.6	0.14…1.5	0.5…0.6
3-phase U_N = 400 or 480 V						
R1	3	17	0.2…2.5	0.5…0.6	0.14…1.5	0.5…0.6
R2	3	17	0.2…2.5	0.5…0.6	0.14…1.5	0.5…0.6
R3	3	17	0.2…2.5	0.5…0.6	0.14…1.5	0.5…0.6
R4	4	17	0.2…2.5	0.5…0.6	0.14…1.5	0.5…0.6
R5	3	17	0.2…2.5	0.5…0.6	0.14…1.5	0.5…0.6
R6	4	17	0.14…2.5	0.5…0.6	0.14…2.5	0.5…0.6
R7	4	17	0.14…2.5	0.5…0.6	0.14…2.5	0.5…0.6
R8	4	17	0.14…2.5	0.5…0.6	0.14…2.5	0.5…0.6
R9	4	17	0.14…2.5	0.5…0.6	0.14…2.5	0.5…0.6

3AXD00000586715.xls L

UL (NEC)

Control cable lead-throughs, wire sizes and tightening torques (*T*) are given below.

Frame size	Cable lead-through		Control cable entries and terminal sizes			
	Holes	Max cable size	+24V, DCOM, DGND, EXT. 24V terminals		DI, AI/O, AGND, RO, STO terminals	
			Wire size	*T*	Wire size	*T*
	pcs	in	AWG	lbf·ft	AWG	lbf·ft
3-phase U_1 = 200...240 V, P_n at U_N = 208/230 V, 60 Hz						
R1	3	0.67	24…14	0.4	26…16	0.4
R2	3	0.67	24…14	0.4	26…16	0.4
R3	3	0.67	24…14	0.4	26…16	0.4
R4	4	0.67	24…14	0.4	26…16	0.4
R5	3	0.67	24…14	0.4	26…16	0.4
R6	4	0.67	26…14	0.4	26…16	0.4
R7	4	0.67	26…14	0.4	26…16	0.4
R8	4	0.67	26…14	0.4	26…16	0.4
3-phase U_1 = 440...480 V, P_n at U_N = 460 V, 60 Hz						
R1	3	0.67	24…14	0.4	26…16	0.4
R2	3	0.67	24…14	0.4	26…16	0.4
R3	3	0.67	24…14	0.4	26…16	0.4
R4	4	0.67	24…14	0.4	26…16	0.4
R5	3	0.67	24…14	0.4	26…16	0.4
R6	4	0.67	26…14	0.4	26…14	0.4
R7	4	0.67	26…14	0.4	26…14	0.4
R8	4	0.67	26…14	0.4	26…14	0.4
R9	4	0.67	26…14	0.4	26…14	0.4
3-phase U_1 = 500...600 V, P_n at U_N = 575 V, 60 Hz						
R2	3	0.67	24…14	0.4	26…16	0.4
R3	3	0.67	24…14	0.4	26…16	0.4
R5	3	0.67	24…14	0.4	26…16	0.4
R7	4	0.67	26…14	0.4	26…16	0.4
R8	4	0.67	24…14	0.4	26…16	0.4
R9	4	0.67	26…14	0.4	26…16	0.4

3AXD00000586715.xls L

Electrical power network specification

Voltage (U_1)	• ACH580-01-xxxx-2 drives: Input voltage range 3~ 200…240 V AC +10%…. -15%. IEC: This is indicated in the type designation label as typical input voltage levels 3~ 230 V AC. North America: This is indicated in the type designation label as typical input voltage levels 1~ 208/230 V AC and 3~ 208/230 V AC. • ACH580-01-xxxx-4 drives: Input voltage range 3~ 380…480 V AC +10%…. -15%. This is indicated in the type designation label as typical input voltage levels 3~ 400/480 V AC. • ACH580-01-xxxx-6 drives: Input voltage range 3~ 575…600 V AC +10%…. -15%. This is indicated in the type designation label as typical input voltage level 3~ 600 V AC.
Network type	Public low voltage networks. Symmetrically grounded TN-S system, IT (ungrounded), corner-grounded delta, midpoint-grounded delta and TT systems. See section: IEC: *When to disconnect EMC filter or ground-to-phase varistor: TN-S, IT, corner-grounded delta and midpoint-grounded delta systems* on page *117*, and *Guidelines for installing the drive to a TT system* on page *118*. North America: *When to connect EMC filter or disconnect ground-to-phase varistor: TN-S, IT, corner-grounded delta and midpoint-grounded delta systems* on page *171*, and *Guidelines for installing the drive to a TT system* on page *172*. **Note:** IEC: Frames R4 and R5 cannot be used in corner-grounded or midpoint-grounded delta systems.
Rated conditional short-circuit current (IEC 61800-5-1)	65 kA when protected by fuses given in the tables in section *Fuses (IEC)* on page *262*.
Short-circuit current protection (UL 508C, UL 61800-5-1)	US and Canada: The drive is suitable for use on a circuit capable of delivering not more than 100 kA symmetrical amperes (rms) at 480 V maximum when protected by fuses given in the table in section *Fuses (UL)* on page *268*.
Frequency (f_1)	47 to 63 Hz. This is indicated in the type designation label as typical input frequency level f1 (50/60 Hz).
Imbalance	Max. ± 3% of nominal phase to phase input voltage
Fundamental power factor (cos phi$_1$)	0.98 (at nominal load)

Motor connection data

Motor types	Asynchronous AC induction motors, permanent magnet motors and synchronous reluctance motors (SynRM)

Short-circuit current protection (IEC/EN 61800-5-1, UL 508C)

The drive provides solid state short circuit protection for the motor connection per IEC/EN 61800-5-1, UL 61800-5-1 and UL 508C.

Frequency (f_2)

0….500 Hz. This is indicated in the type designation label as output frequency level f1 (0....500 Hz).

Frequency resolution

0.01 Hz

Current

See section *Electrical ratings* on page *244*.

Switching frequency

2 kHz, 4 kHz (default), 8 kHz, 12 kHz

Maximum recommended motor cable length

Operational functionality and motor cable length

The drive is designed to operate with optimum performance with the following maximum motor cable lengths.

Note: Conducted and radiated emissions of these motor cable lengths do not comply with EMC requirements.

Frame size	Maximum motor cable length, 4 kHz			
	Scalar control		Vector control	
	m	ft	m	ft
Standard drive, without external options				
R1	100	330	100	330
R2*	200	660	200	660
R3*	300	990	300	990
R4	300	990	300	990
R5	300	990	300	990
R6	300	990	300	990
R7	300	990	300	990
R8	300	990	300	990
R9	300	990	300	990

3AXD00000586715.xls L

*For 600 V drives the maximum motor cable length is 100 m (330 ft) for frame R2 and 200 m (660 ft) for frame R3.
Note 1: In multimotor systems, the calculated sum of all motor cable lengths must not exceed the maximum motor cable length given in the table.
Note 2: Longer motor cables cause a motor voltage decrease which limits the available motor power. The decrease depends on the motor cable length and characteristics. Contact your local ABB representative for more information.
Note 3: When using longer motor cables than 50 m (165 ft), 8 and 12 kHz switching frequencies are not allowed. With motor cable length over 100 m, disconnect EMC DC screw if applicable.
Note 4: Acceptable motor cable length for motor manufactures may be different. Check with specific motor manufacturer for maximum allowable distance.

EMC compatibility and motor cable length

To comply with the European EMC Directive (standard EN 61800-3), use the following maximum motor cable lengths at 4 kHz switching frequency. See the table below.

Frame size	Maximum motor cable length, 4 kHz	
	m	ft
EMC limits for Category C2 [1] Standard drive with an internal EMC filter. See notes 1, 2 and 3.		
R1	100	330
R2	100	330
R3	100	330
R4	100	330
R5	100	330
R6	150	492
R7	150	492
R8	150	492
R9	150	492
EMC limits for Category C3 [1] Standard drive with an internal EMC filter. See notes 3 and 4.		
R1	150	492
R2	150	492
R3	150	492
R4	100	330
R5	100	330
R6	150	492
R7	150	492
R8	150	492
R9	150	492

3AXD00000586715.xls L

[1] See the terms in section *Definitions* on page *301*.

Note 1: Radiated and conducted emissions are according to category C2 with a internal EMC filter. The internal EMC filter must be connected.

Note 2: Categories C1 and C2 meet requirements for connecting equipment to the public low-voltage networks.

Note 3: Not applicable to 600 V ratings.

Note 4: Radiated and conducted emissions are according to category C3 with an internal EMC filter. The internal EMC filter must be connected.

Brake resistor connection data for frames R1…R3

Short-circuit protection (IEC/EN 61800-5-1, IEC 61439-1, UL 508C)	The brake resistor output is conditionally short-circuit proof by IEC/EN 61800-5-1 and UL 508C. Rated conditional short-circuit current as defined in IEC 61439-1.

Control connection data

External power supply	Maximum power: Frames R1…R5 25 W, 1.04 A at 24 V AC/DC ±10% with an option module Frames R6…R9: 36 W, 1.50 A at 24 V AC/DC ±10% as standard Supplied from an external power supply through option module CMOD-01 or CMOD-02 with frames R1…R5. With frames R6…R9 no options are needed. Terminal size: Frames R1…R5: 0.2…2.5 mm^2 (24...14 AWG) Frames R6…R9: 0.14…2.5 mm^2 (26...14 AWG)
+24 V DC output (Term. 10)	Total load capacity of this outputs is 6.0 W (250 mA / 24 V) minus the power taken by the option modules installed on the board. Terminal size: Frames R1…R5: 0.2…2.5 mm^2 (24...14 AWG) Frames R6…R9: 0.14…2.5 mm^2 (26...14 AWG)
Digital inputs DI1…DI6 (Term. 13…18)	Input type: NPN/PNP Terminal size: Frames R1…R5: 0.14…1.5 mm^2 (26...16 AWG) Frames R6…R9: 0.14…2.5 mm^2 (26...14 AWG) DI1…DI5 (Term.13…17) 12/24 V DC logic levels: “0” < 4 V, “1” > 8 V, 10 to 24 V AC R_{in}: 3 kohm Hardware filtering: 0.04 ms, digital filtering: 2 ms sampling DI5 (Term.17) Can be used as a digital or frequency input. 12/24 V DC logic levels: “0” < 3 V, “1” > 8 V, 10 to 24 V AC R_{in}: 3 kohm Max. frequency 16 kHz Symmetrical signal (duty cycle D = 0.50) DI6 (Term. 18) Can be used as a digital or PTC input. Digital input mode 12/24 V DC logic levels: “0” < 4 V, “1” > 8 V R_{in}: 3 kohm Hardware filtering: 0.04 ms, digital filtering: 2 ms sampling

	Note: DI6 is not supported in the NPN configuration. PTC mode – PTC thermistor can be connected between DI6 and +24VDC: < 1.5 kohm = ‘1’ (low temperature), > 4 kohm = ‘0’ (high temperature), open circuit = ‘0’ (high temperature). DI6 is not a reinforced/double insulated input. Connecting the motor PTC sensor to this input requires usage of a reinforced/double insulated PTC sensor inside the motor.
Relay outputs RO1…RO3 (Term. 19…27)	250 V AC / 30 V DC, 2 A Terminal size: Frames R1…R5: 0.14…1.5 mm^2 Frames R6…R9: 0.14…2.5 mm^2 See sections *Isolation areas, R1…R5* on page *292* and *Isolation areas, R6…R9* on page *293*.
Analog inputs AI1 and AI2 (Term. 2 and 5)	Current/voltage input mode selected with a parameter. Current input: 0(4)…20 mA, R_{in}: 100 ohm Voltage input: 0(2)…10 V, R_{in}: > 200 kohm Terminal size: Frames R1…R5: 0.14…1.5 mm^2 Frames R6…R9: 0.14…2.5 mm^2 Inaccuracy: typical ±1%, max. ±1.5% of full scale
Analog outputs AO1 and AO2 (Term. 7 and 8)	Current/voltage input mode selected with a parameter. Current output: 0…20 mA, R_{load}: < 500 ohm Voltage output: 0…10 V, R_{load}: > 100 kohm (AO1 only) Terminal size: Frames R1…R5: 0.14…1.5 mm^2 Frames R6…R9: 0.14…2.5 mm^2 Inaccuracy: ±1% of full scale (in voltage and current modes)
Reference voltage output for analog inputs +10V DC (Term. 4)	Max. 20 mA output Inaccuracy: ±1%
Embedded fieldbus (Term. 29…31)	Connector pitch 5 mm, wire size 2.5 mm^2 Physical layer: EIA-485 Cable type: Shielded twisted pair cable with twisted pair for data and a wire or pair for signal ground, nominal impedance 100…165 ohms, for example Belden 9842 Baud rate: 4.8…115.2 kbit/s Termination by switch
Safe torque off (STO) inputs IN1 and IN2 (Term. 37 and 38)	24 V DC logic levels: “0” < 5 V, “1” > 13 V R_{in}: 2.47 kohm Terminal size: Frames R1…R5: 0.14…1.5 mm^2 Frames R6…R9: 0.14…2.5 mm^2
STO cable	Maximum cable length 300 m (984 ft) between activation switch (K) and drive control board, see sections *Wiring examples* on page *349* and *Safety data* on page *358*.

Control panel - drive and drive - drive connection (panel bus)	EIA-485, male RJ-45 connector, unshielded or shielded twisted pair cable, type CAT 5e or better, max. total cable length of the panel bus 100 m (in single or multiple cables)
Control panel - PC connection	USB Type Mini-B, max. cable length 3 m

Isolation areas, R1…R5

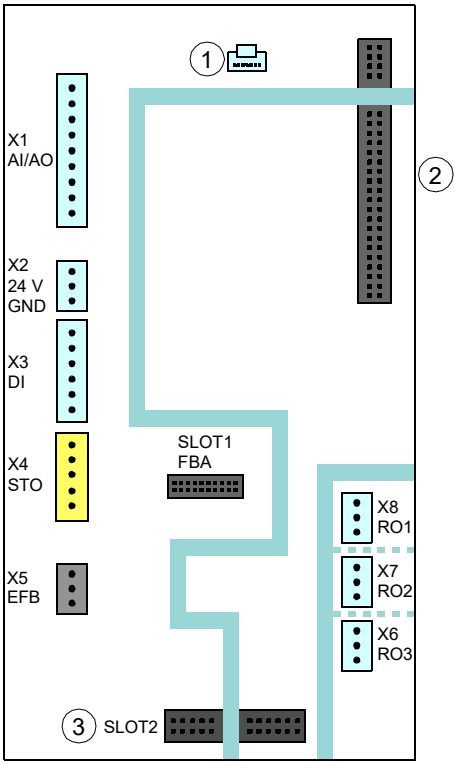

Symbol	Description
1	Panel port
2	Power unit connection
3	I/O extension
	Reinforced insulation (IEC/EN 61800-5-1:2007)
	Functional insulation (IEC/EN 61800-5-1:2007)

Below altitudes 4000 m (13123 ft): The terminals on the control board fulfill the Protective Extra Low Voltage (PELV) requirements (EN 50178): There is adequate insulation between the user terminals which only accept ELV voltages and terminals that accept higher voltages (relay outputs).

Isolation areas, R6…R9

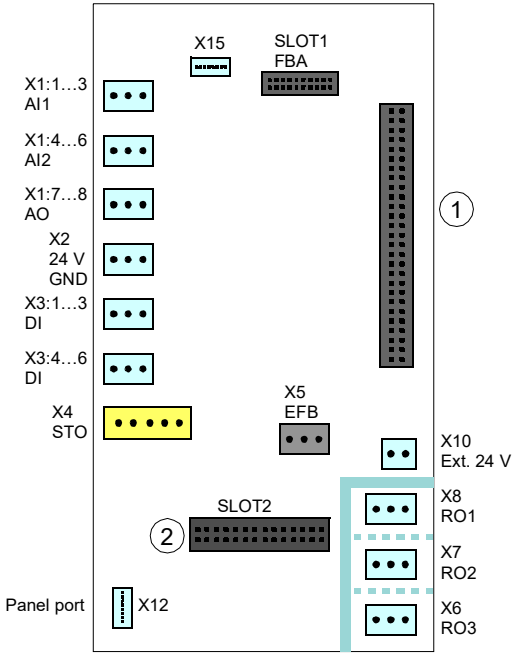

Symbol	Description
1	Power unit connection
2	I/O extension
	Reinforced insulation (IEC/EN 61800-5-1:2007)
	Functional insulation (IEC/EN 61800-5-1:2007)

The terminals on the control board fulfill the Protective Extra Low Voltage (PELV) requirements (EN 50178): There is reinforced insulation between the user terminals which only accept ELV voltages and terminals that accept higher voltages (relay outputs).

Note: There is functional insulation between the individual relay outputs.

Note: There is reinforced insulation on the power unit.

Grounding of frames R1…R5

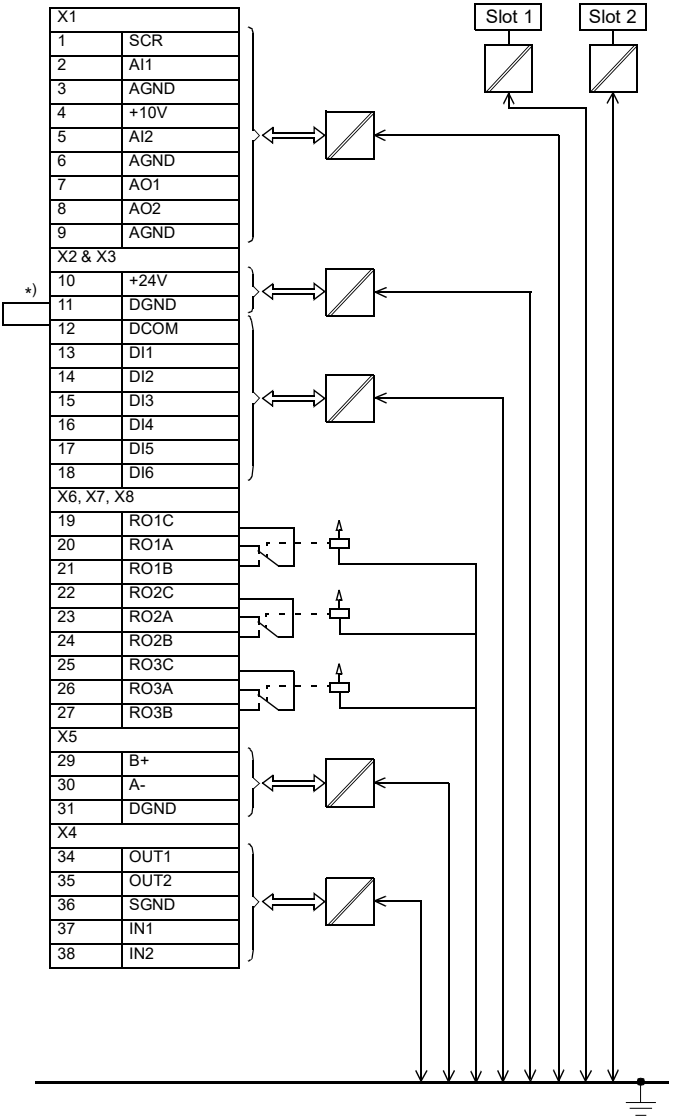

*) Jumper installed at the factory

Grounding of frames R6…R9

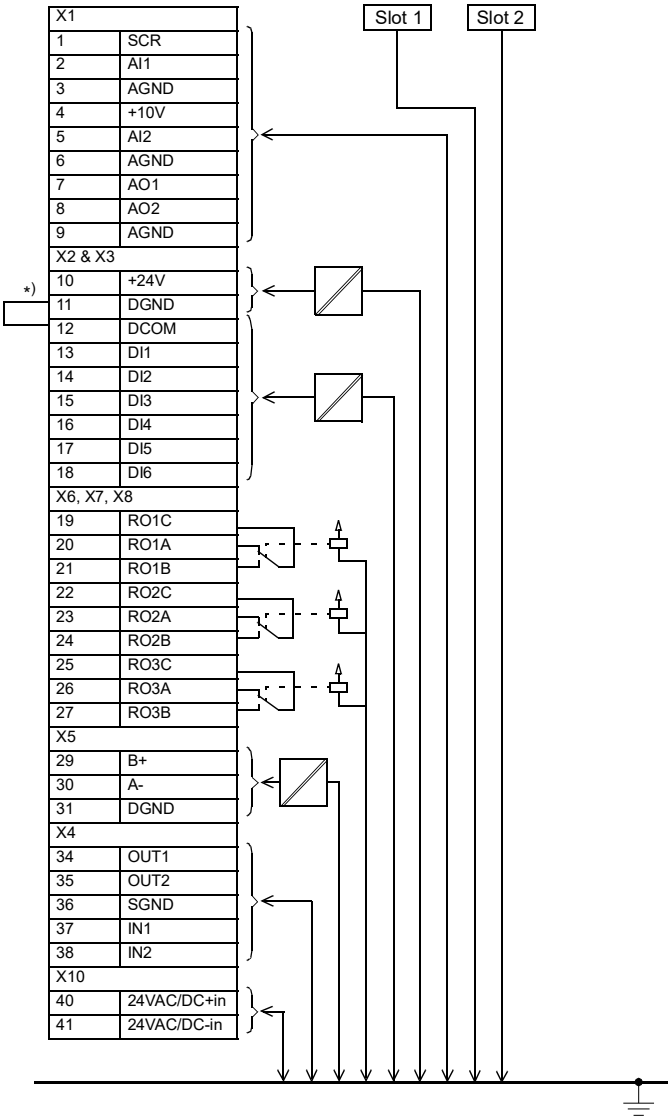

*) Jumper installed at the factory

Auxiliary circuit power consumption

Maximum external power supply:
Frames R1…R5: 25 W, 1.04 A at 24 V AC/DC (with option modules CMOD-01, CMOD-02)
Frames R6…R9: 36 W, 1.50 A at 24 V AC/DC (as standard, terminals 40…41)

Efficiency

Approximately 98% at nominal power level

Degree of protection

Degree of protection (IEC/EN 60529)	IP21, IP55
Enclosure types (UL 508C/61800-5-1)	UL Type 1, UL Type 12
Overvoltage category (IEC 60664-1)	III
Protective classes (IEC/EN 61800-5-1)	I

Ambient conditions

Environmental limits for the drive are given below. The drive is to be used in a heated, indoor, controlled environment. All printed circuit boards are conformal coated.

	Operation installed for stationary use	**Storage** in the protective package	**Transportation** in the protective package
Installation site altitude	• 0 to 4000 m (13123 ft) above sea level [1)] • 0 to 2000 m (6561 ft) above sea level [2)] Output derated above 1000 m (3281 ft), see page 258.	-	-

Air temperature	-15 to +50 °C (5 to 122 °F). 0 to -15 °C (32 to 5 °F): No frost allowed. Output derated above +40 °C (104 °F), see page *254*.	-40 to +70 °C (-40 to +158 °F)	-40 to +70 °C (-40 to +158 °F)
Relative humidity	5 to 95%	Max. 95%	Max. 95%
	No condensation allowed. Maximum allowed relative humidity is 60% in the presence of corrosive gases.		
Contamination levels (IEC 60721-3-x)	IEC 60721-3-3: 2002: Classification of environmental conditions - Part 3-3: Classification of groups of environmental parameters and their severities - Stationary use of weather protected locations	IEC 60721-3-1: 1997	IEC 60721-3-2: 1997
Chemical gases	Class 3C2	Class 1C2	Class 2C2
Solid particles	Class 3S2. No conductive dust allowed.	Class 1S3 (packing must support this, otherwise 1S2)	Class 2S2
Pollution degree (IEC/EN 61800-5-1)	Pollution degree 2	-	-
Atmospheric pressure	70 to 106 kPa 0.7 to 1.05 atmospheres	70 to 106 kPa 0.7 to 1.05 atmospheres	60 to 106 kPa 0.6 to 1.05 atmospheres
Vibration (IEC 60068-2)	Max. 1 mm (0.04 in) (5 to 13.2 Hz), max. 7 m/s^2 (23 ft/s^2) (13.2 to 100 Hz) sinusoidal	-	-
Vibration (ISTA)	-	R1…R4 (ISTA 1A): Displacement, 25 mm peak to peak, 14200 vibratory impacts R5…R9 (ISTA 3E): Random, overall Grms level of 0.52	

<table>
<tr><td>Shock/Drop (ISTA)</td><td>Not allowed</td><td>R1…R4 (ISTA 1A): Drop, 6 faces, 3 edges and 1 corner
<table>
<tr><th>Weight range</th><th>mm</th><th>in</th></tr>
<tr><td>0…10 kg (0…22 lb)</td><td>760</td><td>29.9</td></tr>
<tr><td>10…19 kg (22…42 lb)</td><td>610</td><td>24.0</td></tr>
<tr><td>19…28 kg (42…62 lb)</td><td>460</td><td>18.1</td></tr>
<tr><td>28…41 kg (62…90 lb)</td><td>340</td><td>13.4</td></tr>
</table>
R5…R9 (ISTA 3E): Shock, incline impact: 1.1 m/s (3.61 ft/s)
Shock, rotational edge drop: 200 mm (7.9 in)</td></tr>
</table>

1) For symmetrically grounded TN-S systems, TT systems, and ungrounded or symmetrically high-resistance grounded IT systems.
See also section *Limiting relay output maximum voltages at high installation altitudes* on page *109*.

2) For corner-grounded delta systems, midpoint-grounded delta systems and corner-grounded (via high resistance) IT systems. **Note:** There are special considerations in corner-grounded installations above 2000 m. Contact your local ABB representative for further information.

Materials

Drive enclosure

- PC/ABS 3 mm, PC+GF10 3mm, color NCS 1502-Y (RAL 9002 / PMS 1C Cool Grey) and RAL 9002
- hot-dip zinc coated steel sheet 1.5 to 2.5 mm, thickness of coating 100 micrometers, color NCS 1502-Y

Package

Plywood, cardboard and molded pulp. Foam cushions PE, PP-E, bands PP.

Disposal

The main parts of the drive can be recycled to preserve natural resources and energy. Product parts and materials should be dismantled and separated.

Generally all metals, such as steel, aluminum, copper and its alloys, and precious metals can be recycled as material. Plastics, rubber, cardboard and other packaging material can be used in energy recovery. Printed circuit boards and large electrolytic capacitors need selective treatment according to IEC 62635 guidelines. To aid recycling, plastic parts are marked with an appropriate identification code.

Contact your local ABB distributor for further information on environmental aspects and recycling instructions for professional recyclers. End of life treatment must follow international and local regulations.

Applicable standards

The drive complies with the following standards. The compliance with the European Low Voltage Directive is verified according to standard EN 61800-5-1.

EN 60204-1:2006 + AC:2010	*Safety of machinery. Electrical equipment of machines. Part 1: General requirements. Provisions for compliance:* The final assembler of the machine is responsible for installing - emergency-stop device - supply disconnecting device.
IEC/EN 60529:1992 + A2: 2013	*Degrees of protection provided by enclosures (IP code)*
EN 61000-3-12:2011	*Electromagnetic compatibility (EMC) - Part 3-12: Limits - Limits for harmonic currents produced by equipment connected to public low-voltage systems with input current* The standard is met with a Rsce (transformer short circuit ratio) of 350 or higher.
IEC/EN 61800-3:2004 + A1:2012	*Adjustable speed electrical power drive systems. Part 3: EMC requirements and specific test methods*
IEC/EN 61800-5-1:2007	*Adjustable speed electrical power drive systems. Part 5-1: Safety requirements – electrical, thermal and energy*
IEC 60664-1:2007	*Insulation coordination for equipment within low-voltage systems. Part 1: Principles, requirements and tests.*
UL 508C 3rd edition	*UL Standard for Safety, Power Conversion Equipment, second edition*
NEMA 250:2008	*Enclosures for Electrical Equipment (1000 Volts Maximum)*

CE marking

A CE mark is attached to the drive to verify that the drive follows the provisions of the European Low Voltage, EMC and RoHS Directives.The CE marking also verifies that the drive, in regard to its safety functions (such as Safe torque off), conforms with the Machinery Directive as a safety component.

Compliance with the European Low Voltage Directive

The compliance with the European Low Voltage Directive has been verified according to standard EN 61800-5-1:2007. The declaration of conformity (3AXD10000437232) is available on the Internet. See section *Document library on the Internet* on the inside of the back cover.

Compliance with the European EMC Directive

The EMC Directive defines the requirements for immunity and emissions of electrical equipment used within the European Union. The EMC product standard (EN 61800-3:2004 + A1:2012) covers requirements stated for drives. See section *Compliance with the EN 61800-3:2004 + A1:2012* below. The declaration of conformity (3AXD10000437232) is available on the Internet. See section *Document library on the Internet* on the inside of the back cover.

Compliance with the European ROHS II Directive 2011/65/EU

The RoHS II Directive defines the restriction of the use of certain hazardous substances in electrical and electronic equipment. The declaration of conformity (3AXD10000437231) is available on the Internet. See section *Document library on the Internet* on the inside of the back cover.

Compliance with the European WEEE Directive

The WEEE Directive defines the regulated disposal and recycling of electric and electrical equipment.

Compliance with the European Machinery Directive 2006/42/EC 2nd Edition – June 2010

The drive is a machinery component that can be integrated into a wide range of machinery categories as specified in European Commission's *Guide to application of the Machinery Directive 2006/42/EC 2nd Edition – June 2010*. The declaration of conformity (3AXD10000437229) is available on the Internet. See section *Document library on the Internet* on the inside of the back cover.

Validating the operation of the Safe torque off function

See chapter *Safe torque off function* on page *345*.

Compliance with the EN 61800-3:2004 + A1:2012

Definitions

EMC stands for **E**lectro**m**agnetic **C**ompatibility. It is the ability of electrical/electronic equipment to operate without problems within an electromagnetic environment. Likewise, the equipment must not disturb or interfere with any other product or system within its locality.

First environment includes establishments connected to a low-voltage network which supplies buildings used for domestic purposes.

Second environment includes establishments connected to a network not directly supplying domestic premises.

Drive of category C1: drive of rated voltage less than 1000 V and intended for use in the first environment.

Drive of category C2: drive of rated voltage less than 1000 V and intended to be installed and started up only by a professional when used in the first environment.

Note: A professional is a person or organization having necessary skills in installing and/or starting up power drive systems, including their EMC aspects.

Drive of category C3: drive of rated voltage less than 1000 V, intended for use in the second environment and not intended for use in the first environment.

Category C1

The conducted emission limits are complied with the following provisions:

1. The optional EMC C1 filter is selected according to the documentation and installed as specified in the EMC C1 filter manual. See *Main switch and EMC C1 filter options (+F278, +F316, +E223) installation supplement for ACS580-01, ACH580-01 and ACQ580-01 frames R1 to R5* (3AXD50000155132 [Multilingual]). Only available for IP55 (+B056) frames R1…R5, up to 55 kW.
2. The motor and control cables are selected as specified in this manual.
3. The drive is installed according to the instructions given in this manual.
4. The maximum motor cable length with 2 kHz switching frequency is 10 m.

WARNING! In a domestic environment, this product may cause radio inference, in which case supplementary mitigation measures may be required.

Category C2

The emission limits are complied with the following provisions:

2. The motor and control cables are selected as specified in this manual.
3. The drive is installed according to the instructions given in this manual.
4. For the maximum motor cable length with 4 kHz switching frequency, see page *287*.

WARNING! The drive may cause radio interference if used in residential or domestic environment. The user is required to take measures to prevent interference, in association to the requirements for the CE compliance listed above, if necessary.

Note: Do not install a drive with the EMC filter connected to a system that the filter is not suitable for. This can cause danger, or damage the drive.

Note: Do not install a drive with the ground-to-phase varistor connected to a system that the varistor is not suitable for. If you do, the varistor circuit can be damaged.

If you install the drive to any other system than symmetrically grounded TN-S system, you may need to disconnect the EMC filter or the ground-to-phase varistor. See sections:

IEC: *Checking the compatibility with IT (ungrounded), corner-grounded delta, midpoint-grounded delta and TT systems* on page *116*

North America: *Checking the compatibility with IT (ungrounded), corner-grounded delta, midpoint-grounded delta and TT systems* on page *170*

Category C3

The drive complies with the standard with the following provisions:

1. The motor and control cables are selected as specified in this manual.
2. The drive is installed according to the instructions given in this manual.
3. For the maximum motor cable length with 4 kHz switching frequency, see page *287*

WARNING! A drive of category C3 is not intended to be used on a low-voltage public network which supplies domestic premises. Radio frequency interference is expected if the drive is used on such a network.

Category C4

If the provisions under *Category C3* cannot be met, the requirements of the standard can be met as follows:

1. It is ensured that no excessive emission is propagated to neighboring low-voltage networks. In some cases, the inherent suppression in transformers and cables is sufficient. If in doubt, the supply transformer with static screening between the primary and secondary windings can be used.

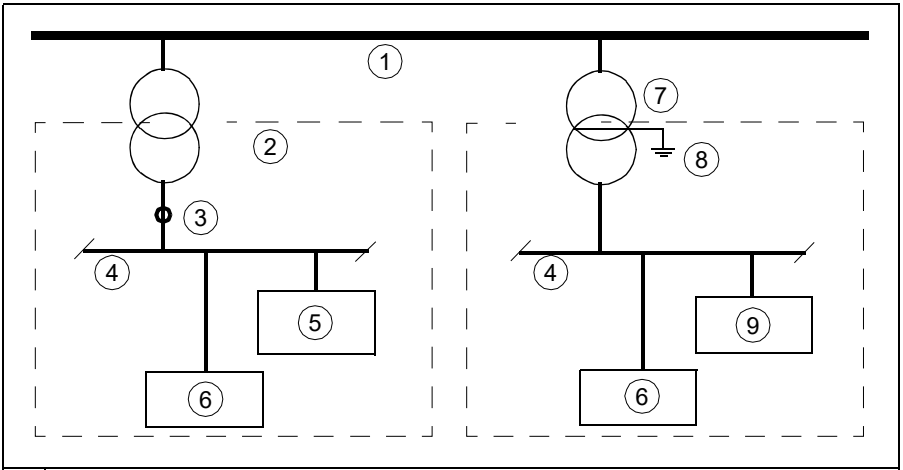

1	Medium voltage network
2	Neighboring network
3	Point of measurement
4	Low voltage
5	Equipment (victim)
6	Equipment
7	Supply transformer
8	Static screen
9	Drive

2. An EMC plan for preventing disturbances is drawn up for the installation. A template is available from the local ABB representative.
3. The motor and control cables are selected as specified in this manual.
4. The drive is installed according to the instructions given in this manual.

WARNING! A drive of category C4 is not intended to be used on a low-voltage public network which supplies domestic premises. Radio frequency interference is expected if the drive is used on such a network.

UL marking

The drive is cULus Listed.

UL checklist

WARNING! Operation of this drive requires detailed installation and operation instructions provided in the hardware and firmware manuals. The manuals can be found on the Internet. Depending on the product series, the drive package may contain the manuals in electric format or as hard copies (as standard or ordered with option codes with the drive). Hard copies of the manuals can also be ordered through the manufacturer separately. Retain the hard copies of the manuals with the drive.

- Make sure that the drive type designation label includes the cULus Listed marking.
- **CAUTION - Risk of electric shock**. After disconnecting the input power, always wait for 5 minutes to let the intermediate circuit capacitors discharge before you start working on the drive, motor or motor cable.
- The drive is to be used in a heated, indoor controlled environment. The drive must be installed in clean air according to the enclosure classification. Cooling air must be clean, free from corrosive materials and electrically conductive dust.
- The maximum surrounding air temperature is 40 °C (104 °F) at rated current for all UL Type 1 and UL Type 12 frames. The current is derated for 40 to 50 °C (104 to 122 °F).
- The drive is suitable for use in a circuit capable of delivering not more than 100,000 rms symmetrical amperes, 480 V maximum when protected by the UL fuses given in the table on page *268*. The ampere rating is based on tests done according to the appropriate UL standard.
- The cables located within the motor circuit must be rated for at least 75 °C (167 °F) in UL-compliant installations.
- The input cable must be protected with fuses. Suitable UL (class T) fuses are listed on page *268*. These fuses provide branch circuit protection in accordance with the National Electrical Code (NEC) and Canadian Electrical Code. For installation in the United States, obey any other applicable local codes. For installation in Canada, obey any applicable provincial codes.

  Note: Circuit breakers must not be used without fuses in the USA. See page *266* for suitable circuit breakers.

  WARNING! The opening of the branch-circuit protective device may be an indication that a fault current has been interrupted. To reduce the risk of fire

or electric shock, current-carrying parts and other components of the controller should be examined and replaced if damaged.

- The drive provides motor overload protection. For the adjustments, see the firmware manual.
- For drive overvoltage category, see page *296*. For pollution degree, see page *297*.
- To maintain the environmental integrity of the enclosure, replace the cable grommets with field-installed industrial conduit hubs or closure plates required by the enclosure type (or better).

China RoHS marking

The *People's Republic of China Electronic Industry Standard* (SJ/T 11364-2014) specifies the marking requirements for hazardous substances in electronic and electrical products. The green mark is attached to the drive to verify that it does not contain toxic and hazardous substances or elements above the maximum concentration values, and that it is an environmentally-friendly product which can be recycled and reused.

KC marking

The KC (Korea Certification) certification mark signifies compliance with Korea's product safety requirements for electrical and electronic equipment and components that utilize power from 50…1000 V AC.

RCM marking

See the type designation label for the valid markings of your drive. Regulatory Compliance (RCM) Mark is required in Australia and New Zealand. A RCM mark is attached to the drive to verify compliance with the relevant standard (IEC/EN 61800-3:2004 – *Adjustable speed electrical power drive systems – Part 3: EMC product standard including specific test methods*), mandated by the Trans-Tasman Electromagnetic Compatibility Scheme. For fulfilling the requirements of the standard, see section Compliance with IEC/EN 61800-3:2004 on page 382. The declaration of conformity (3AXD10000493119) is available on the Internet. See section *Document library on the Internet* on the inside of the back cover.

WEEE marking

The drive is marked with the wheelie bin symbol. It indicates that at the end of life the drive should enter the recycling system at an appropriate collection point and not placed in the normal waste stream. See section *Disposal* on page *298*.

EAC marking

EAC marking is required in Russia, Belarus and Kazakhstan. The EAC certificate of conformity (3AXD10000312900) is available on the Internet. See section *Document library on the Internet* on the inside of the back cover.

Disclaimer

The manufacturer shall have no obligation with respect to any product which (i) has been improperly repaired or altered; (ii) has been subjected to misuse, negligence or accident; (iii) has been used in a manner contrary to the manufacturer's instructions; or (iv) has failed as a result of ordinary wear and tear.

Cyber security disclaimer

This product is designed to be connected to and to communicate information and data via a network interface. It is Customer's sole responsibility to provide and continuously ensure a secure connection between the product and Customer network or any other network (as the case may be). Customer shall establish and maintain any appropriate measures (such as but not limited to the installation of firewalls, application of authentication measures, encryption of data, installation of anti-virus programs, etc) to protect the product, the network, its system and the interface against any kind of security breaches, unauthorized access, interference, intrusion, leakage and/or theft of data or information. ABB and its affiliates are not liable for damages and/or losses related to such security breaches, any unauthorized access, interference, intrusion, leakage and/or theft of data or information.

11

Dimension drawings

Contents of this chapter

This chapter shows the dimension drawings of the ACH580-01.

Note: The dimensions are given in millimeters and [inches].

Frame R1, IP21 (UL Type 1)

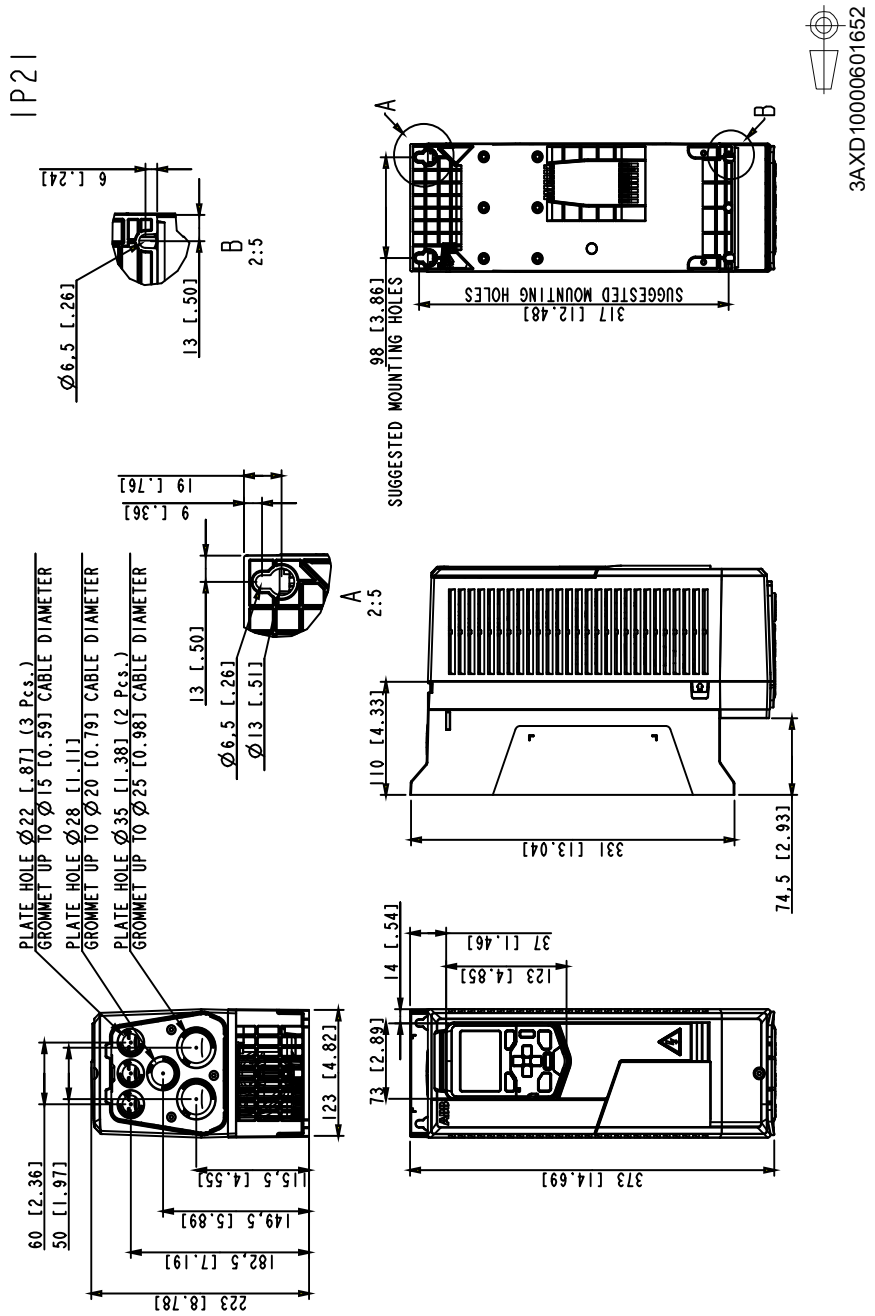

Frame R1, IP55 (UL Type 12)

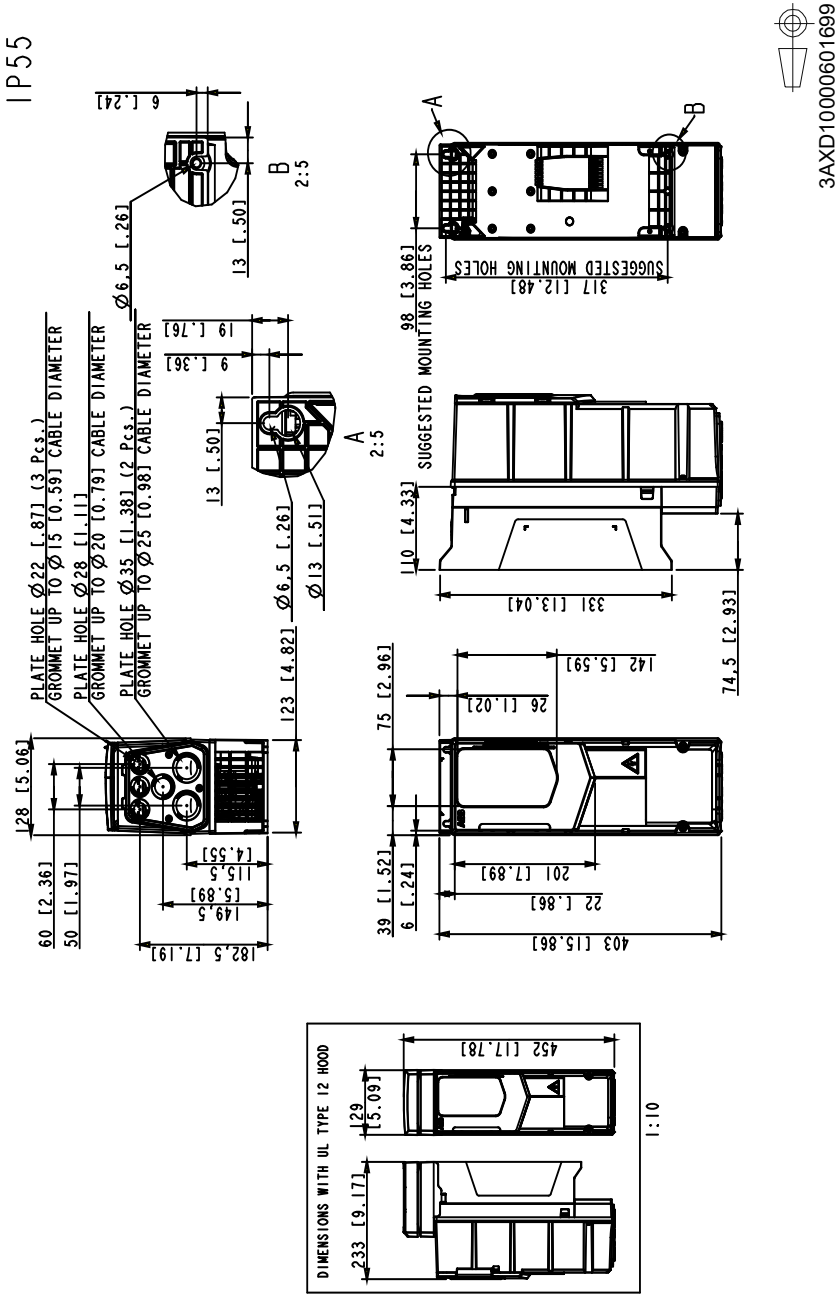

Frame R1, IP55+F278 (UL Type 12)

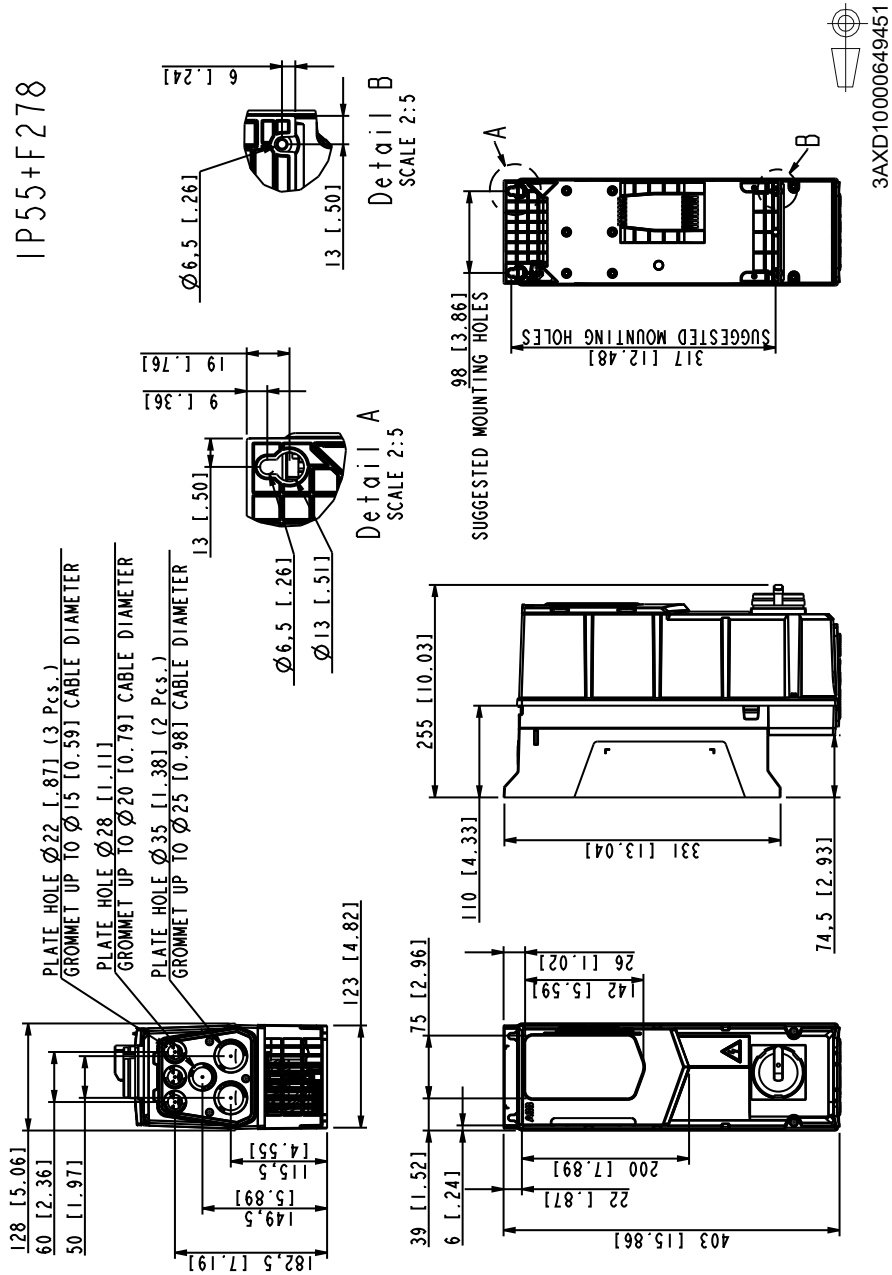

Frame R2, IP21 (UL Type 1)

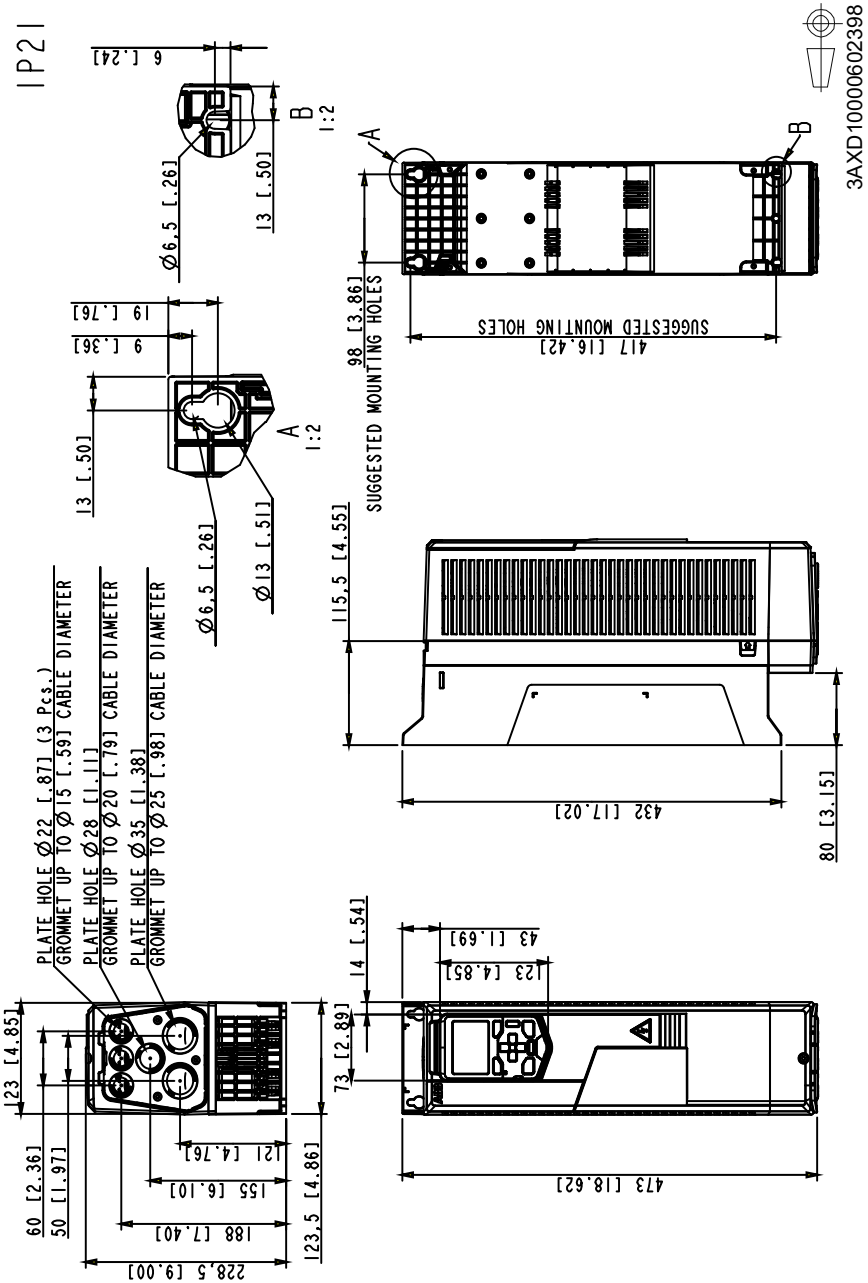

Frame R2, IP55 (UL Type 12)

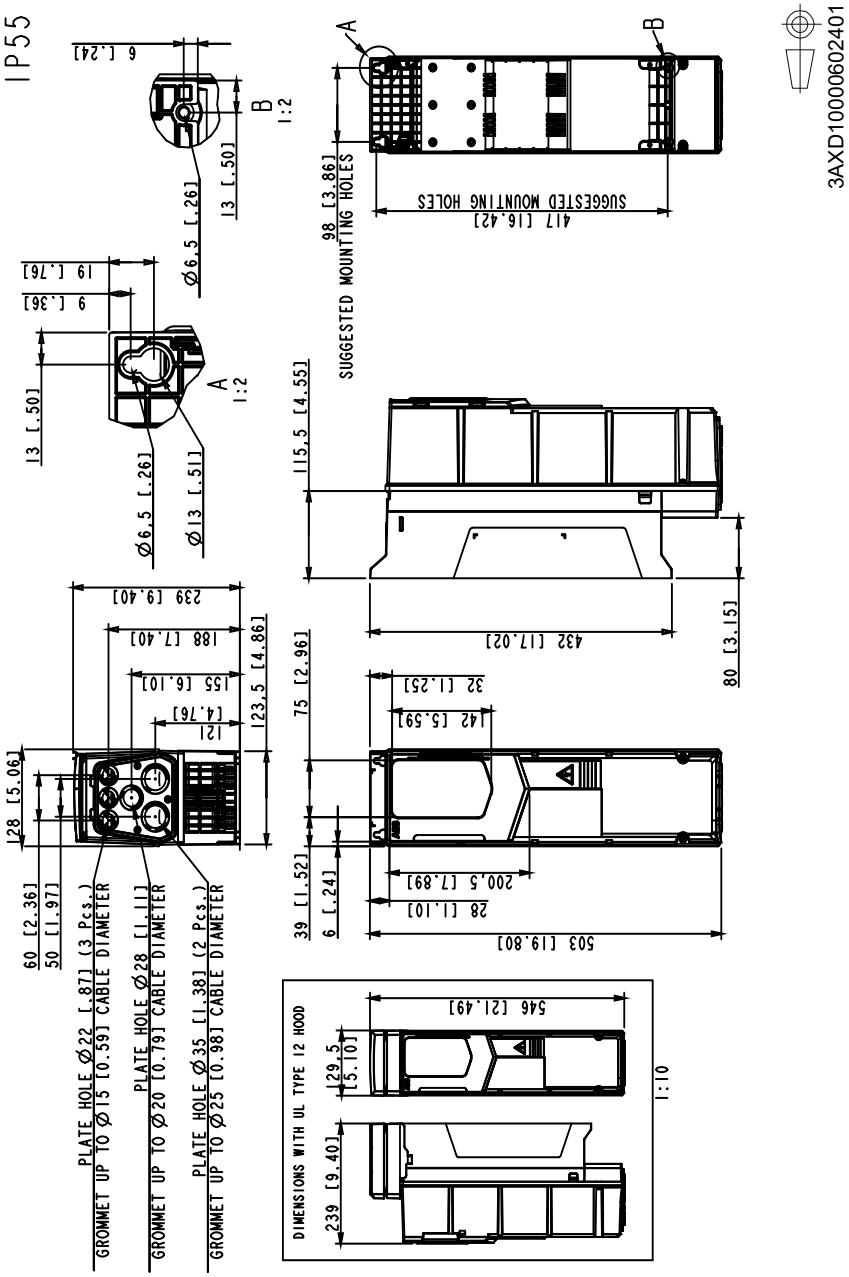

Frame R2, IP55+F278 (UL Type 12)

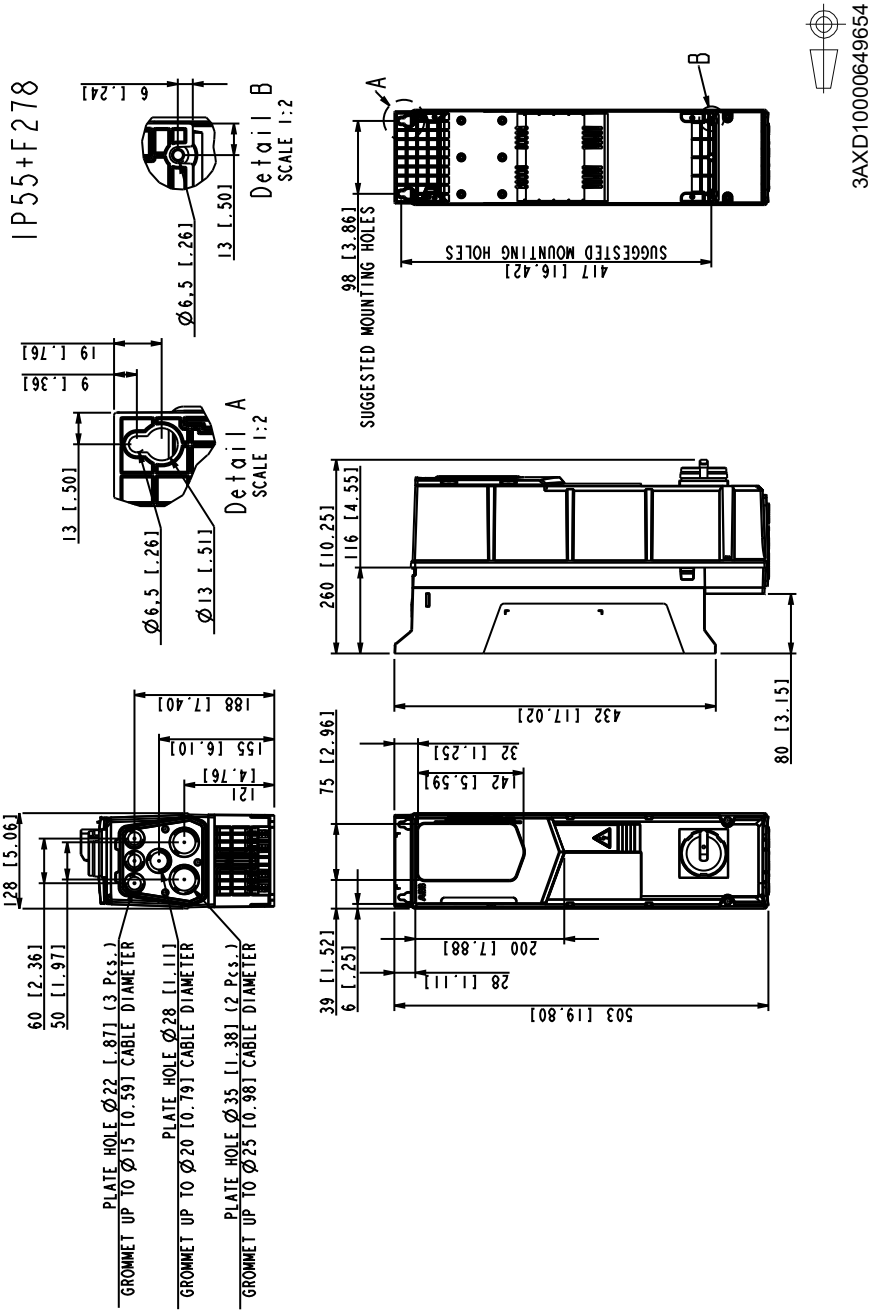

Frame R3, IP21 (UL Type 1)

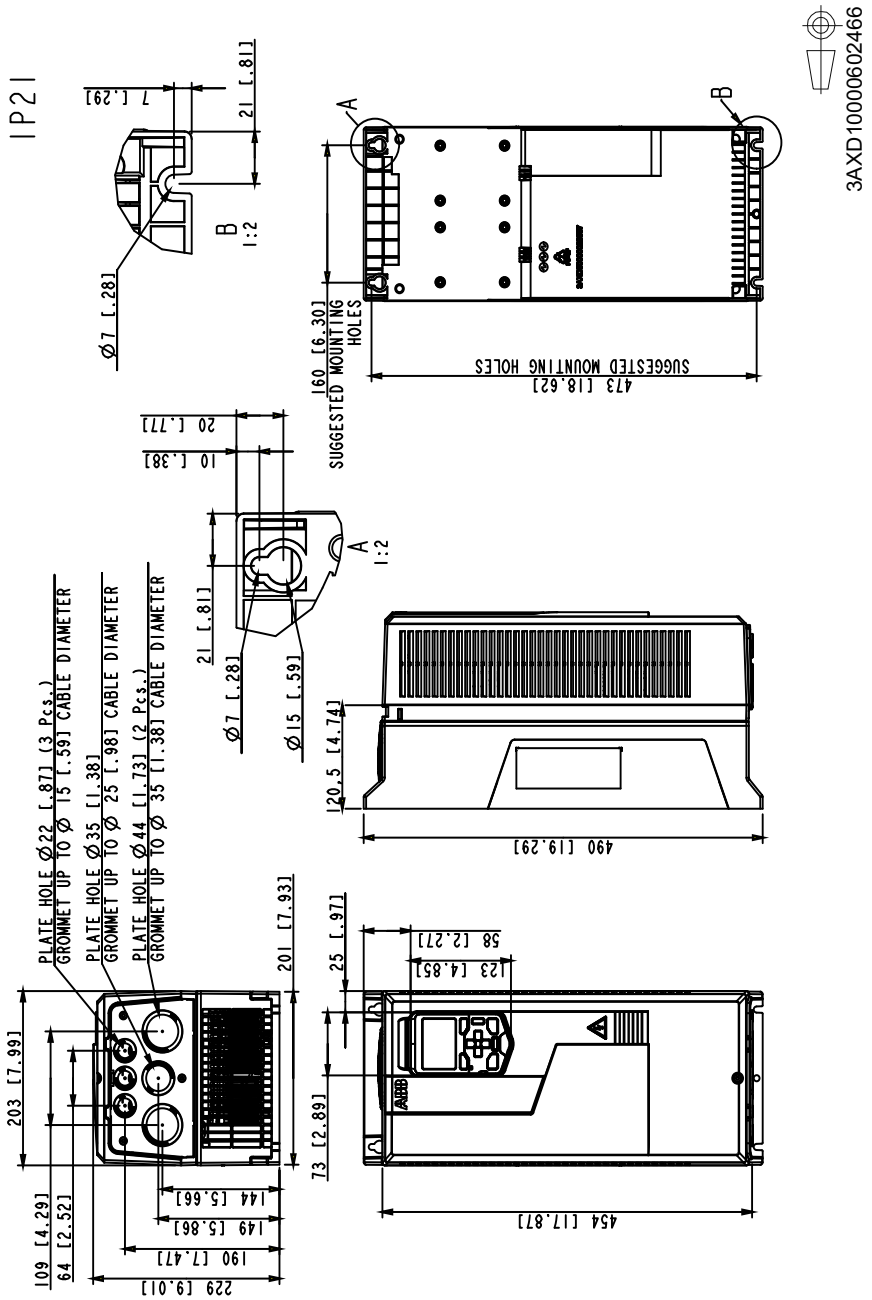

Frame R3, IP55 (UL Type 12)

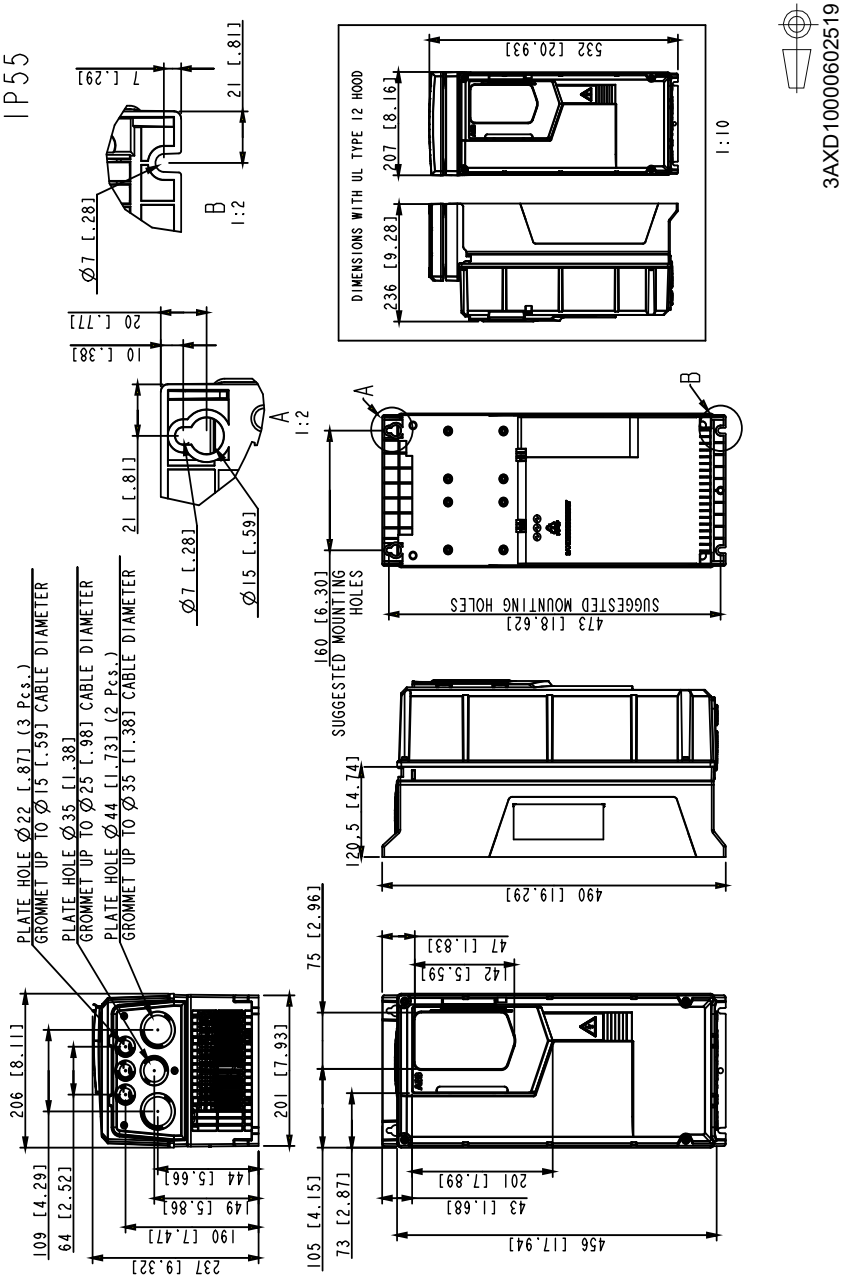

Frame R3, IP55+E223 (UL Type 12)

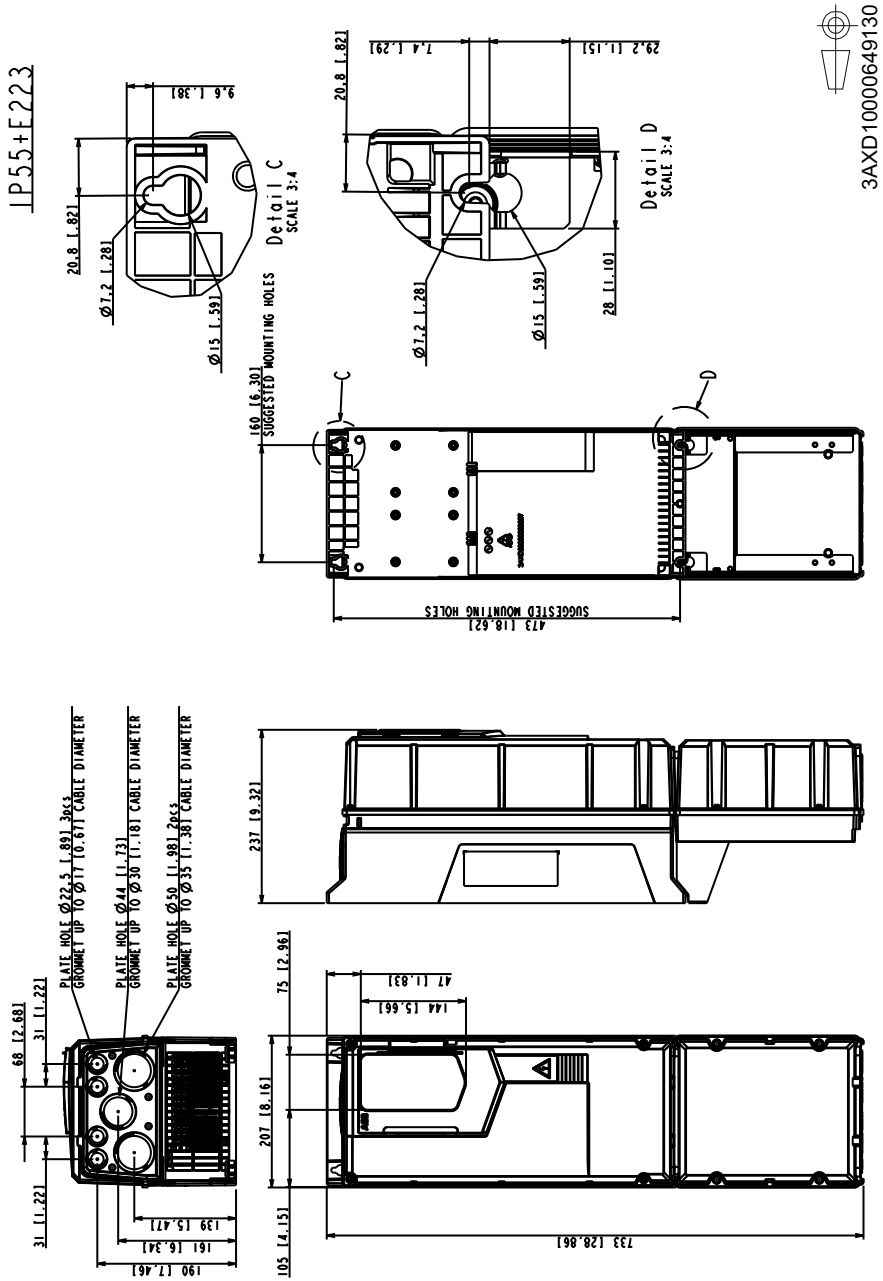

Frame R3, IP55+F278/F316 (UL Type 12)

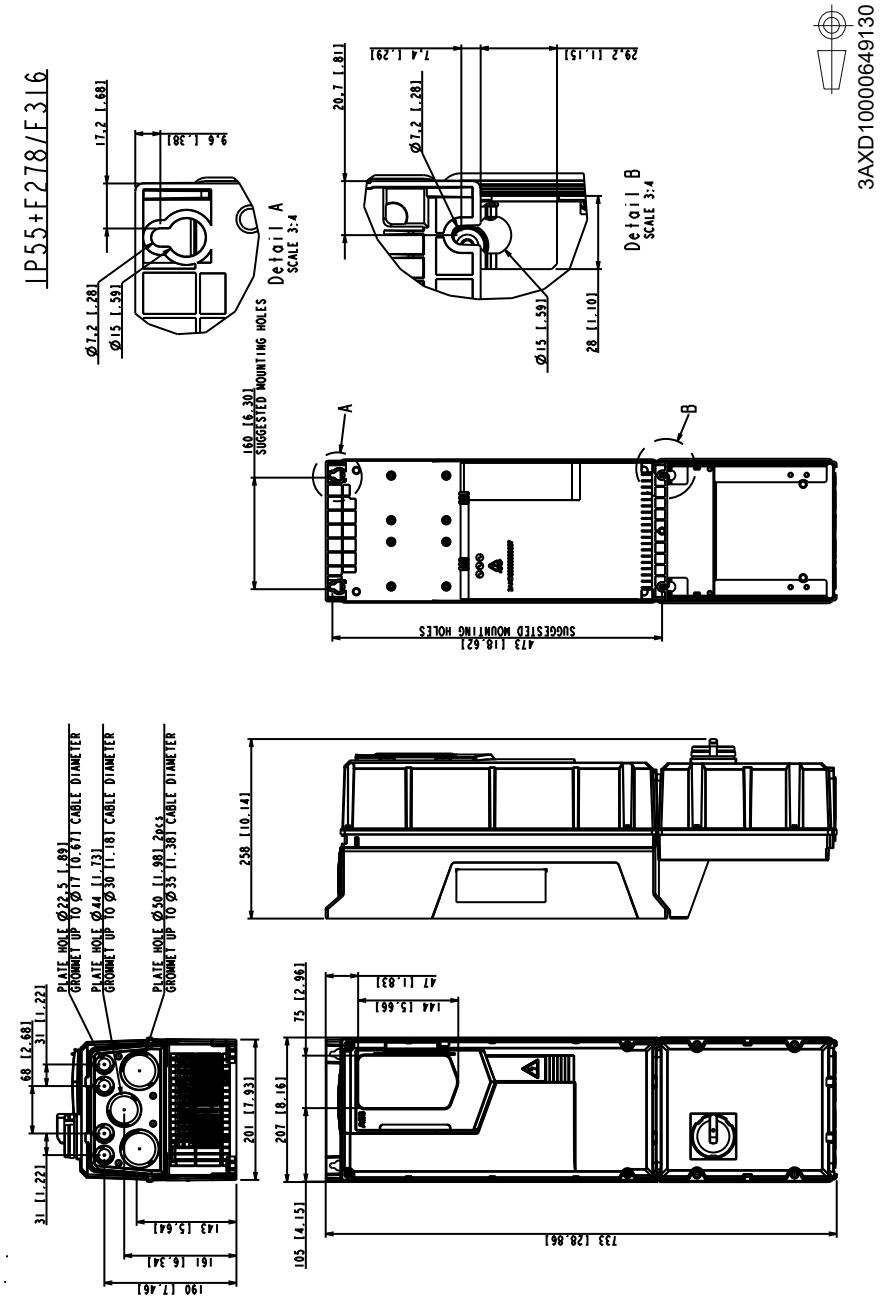

Frame R4, IP21 (UL Type 1)

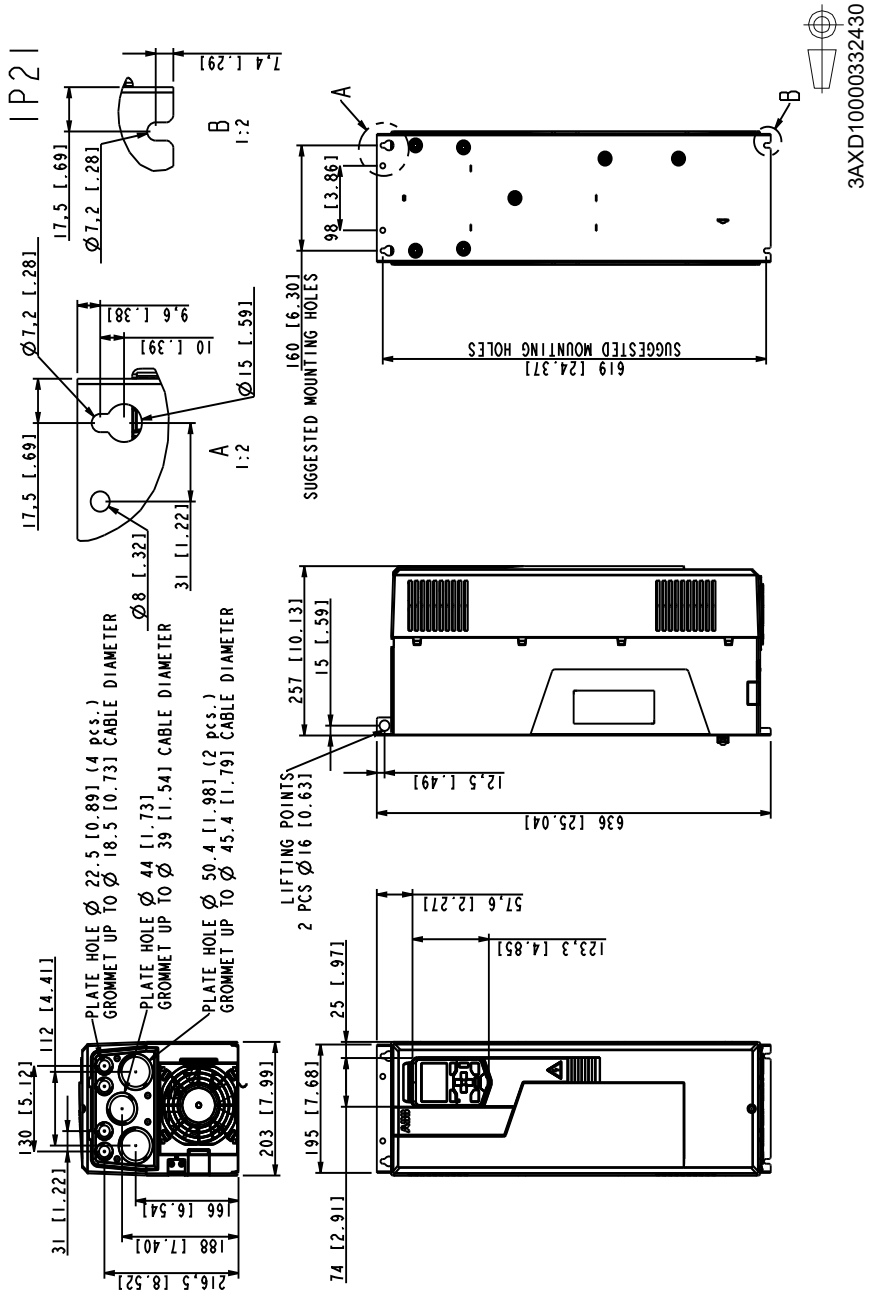

Frame R4, IP55 (UL Type 12)

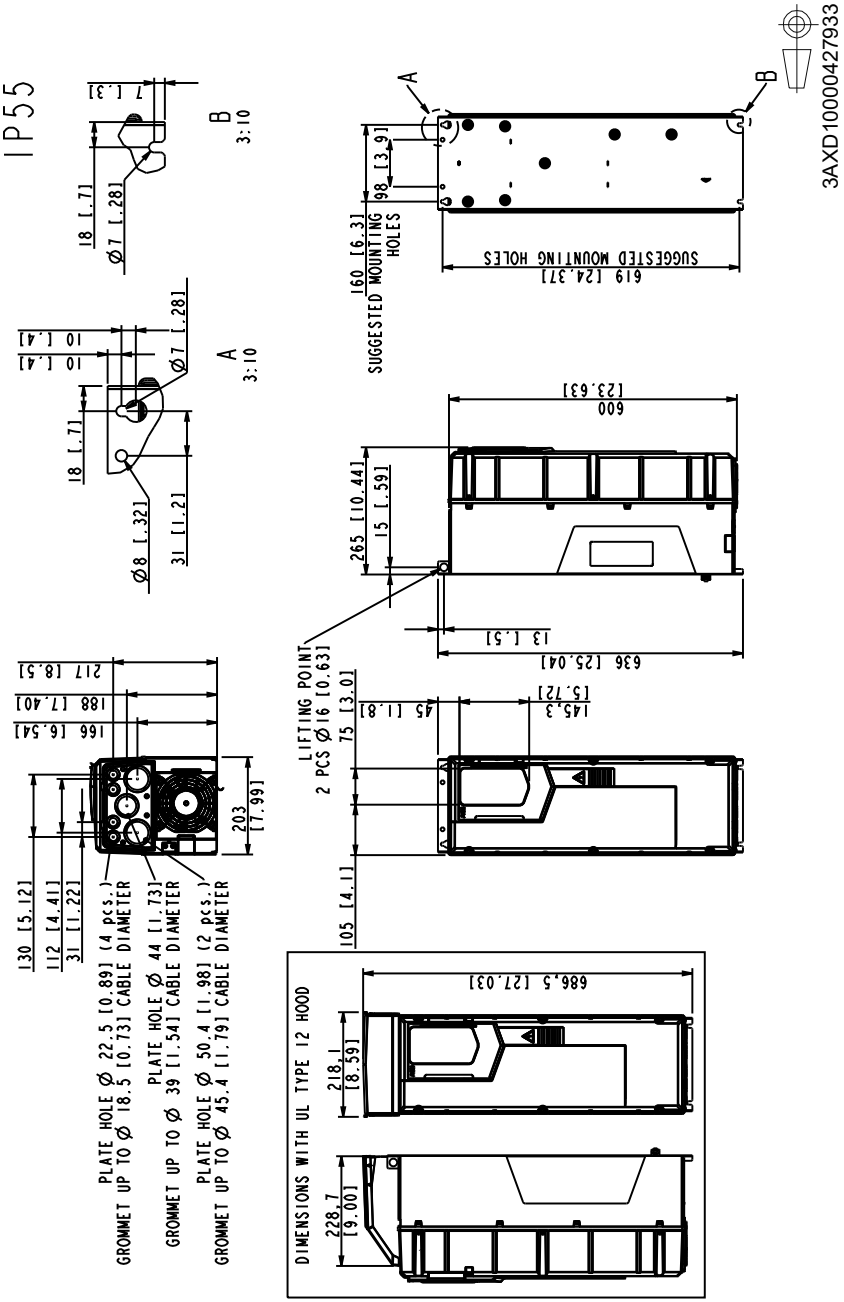

Frame R4, IP55+E223 (UL Type 12)

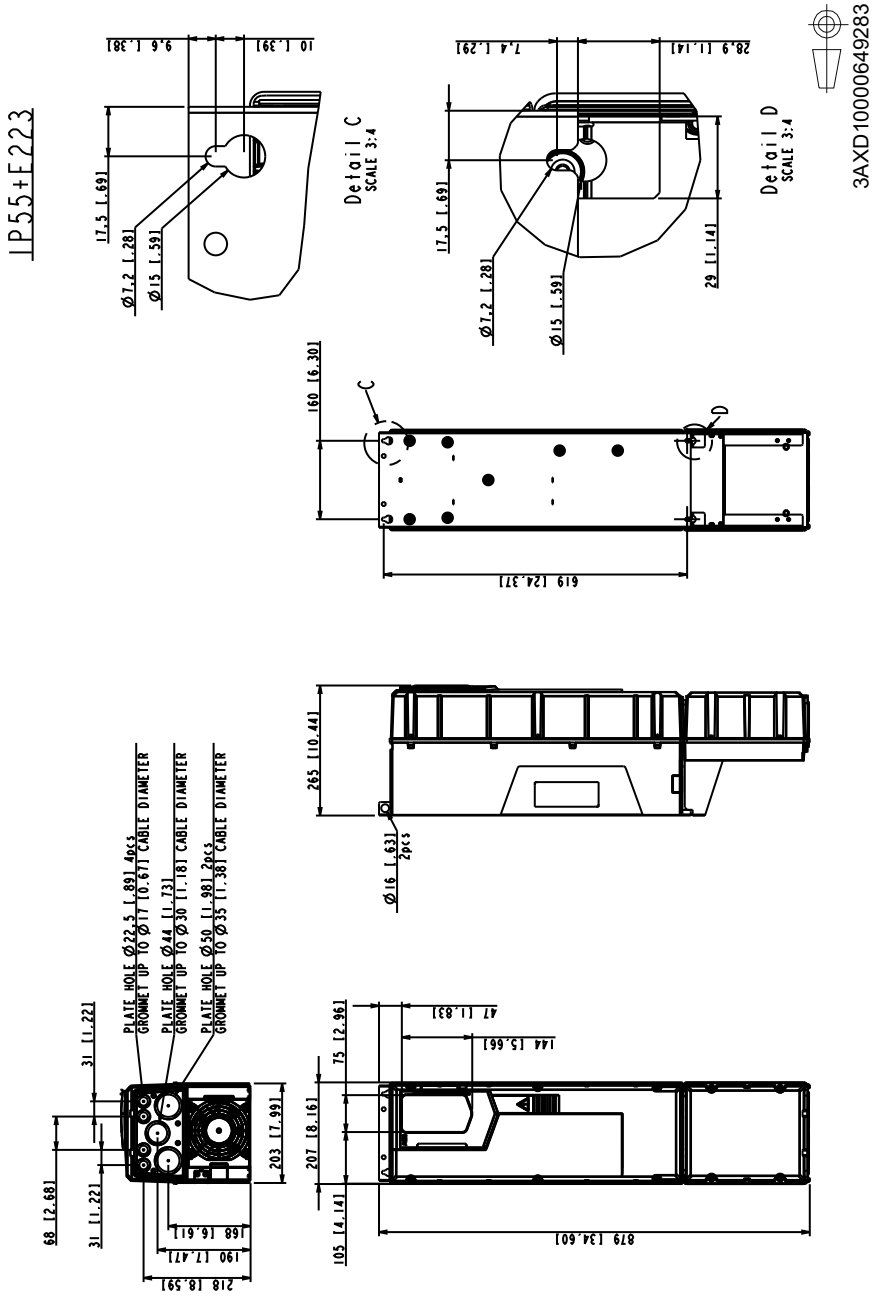

Frame R4, IP55+F278/F316 (UL Type 12)

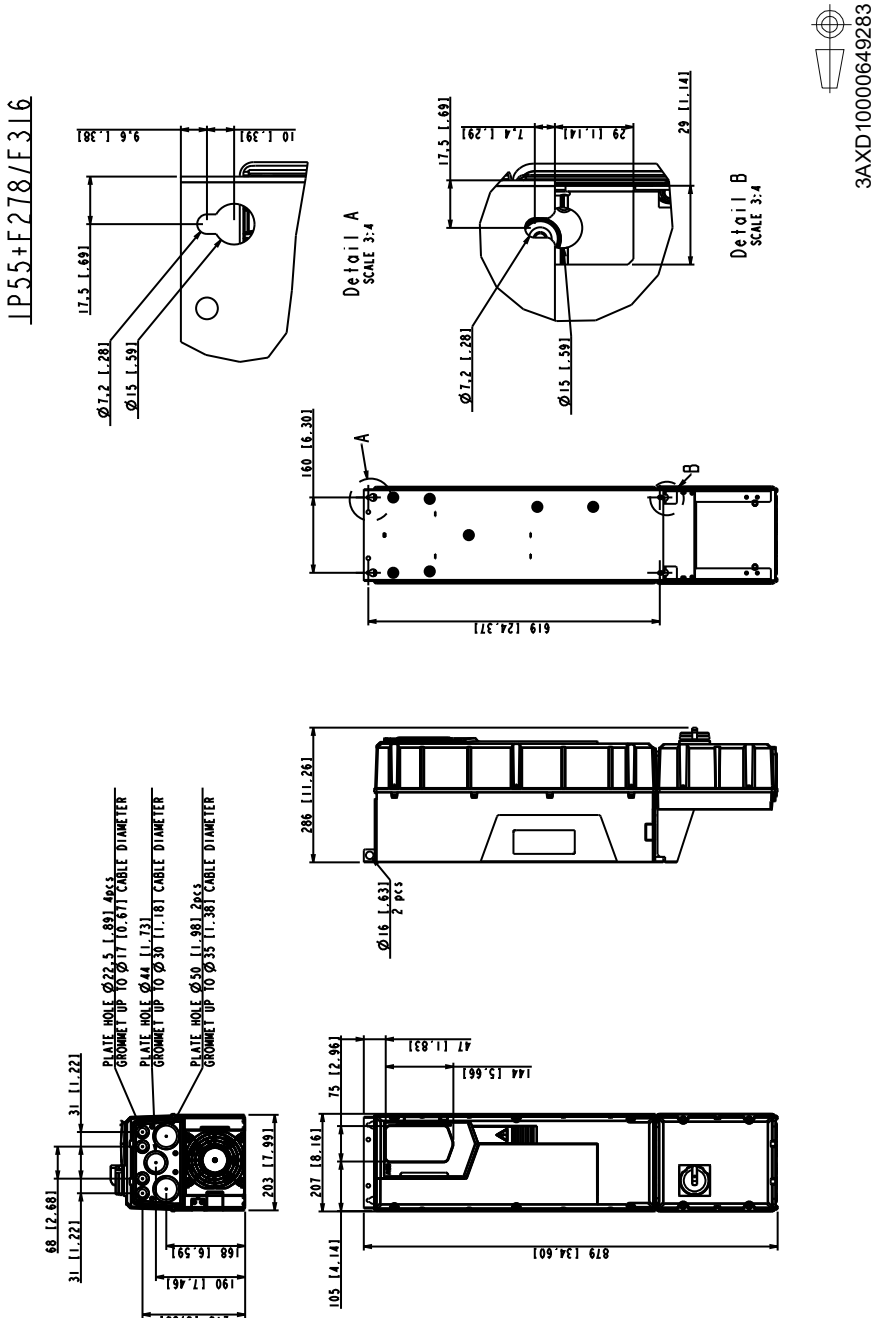

Frame R5, IP21 (UL Type 1)

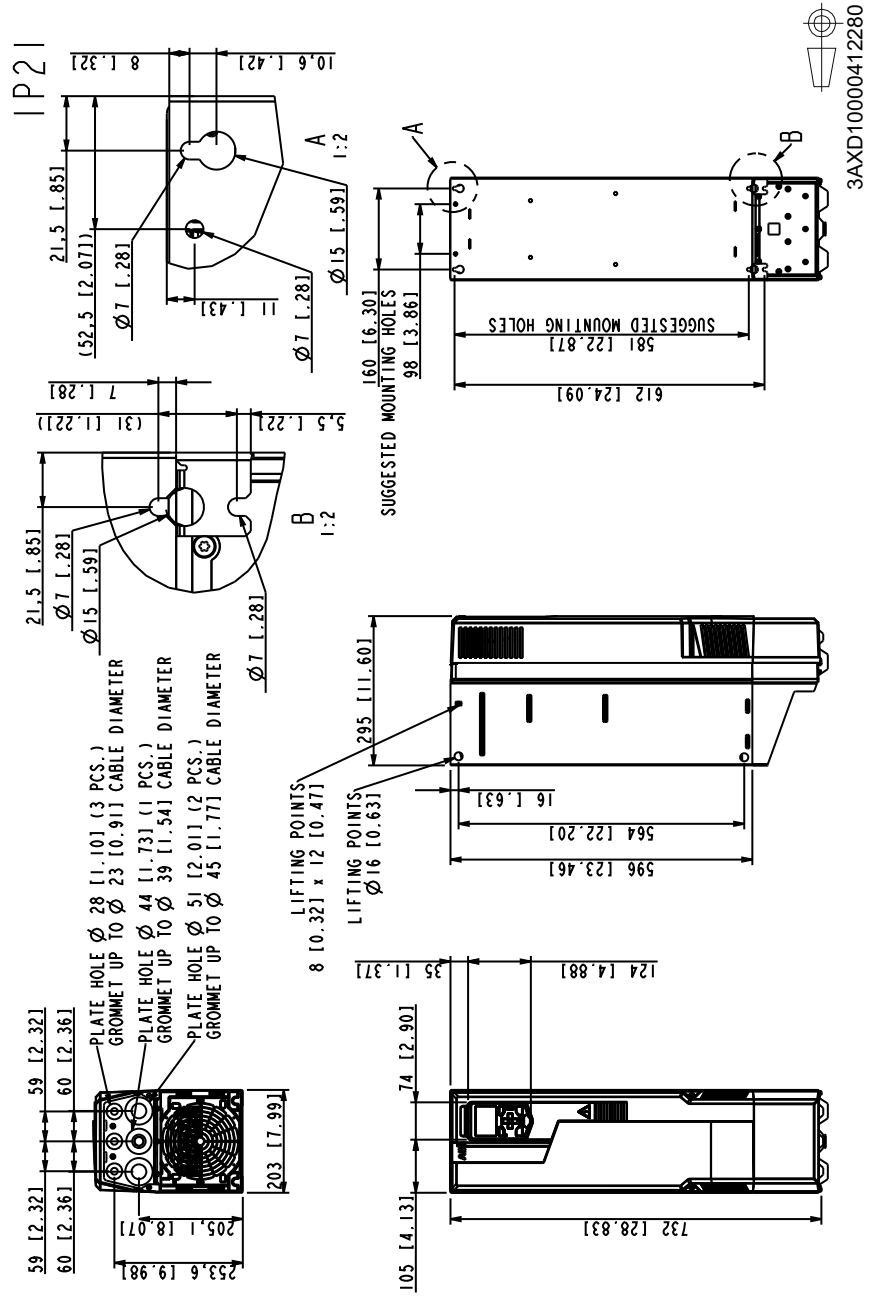

Frame R5, IP55 (UL Type 12)

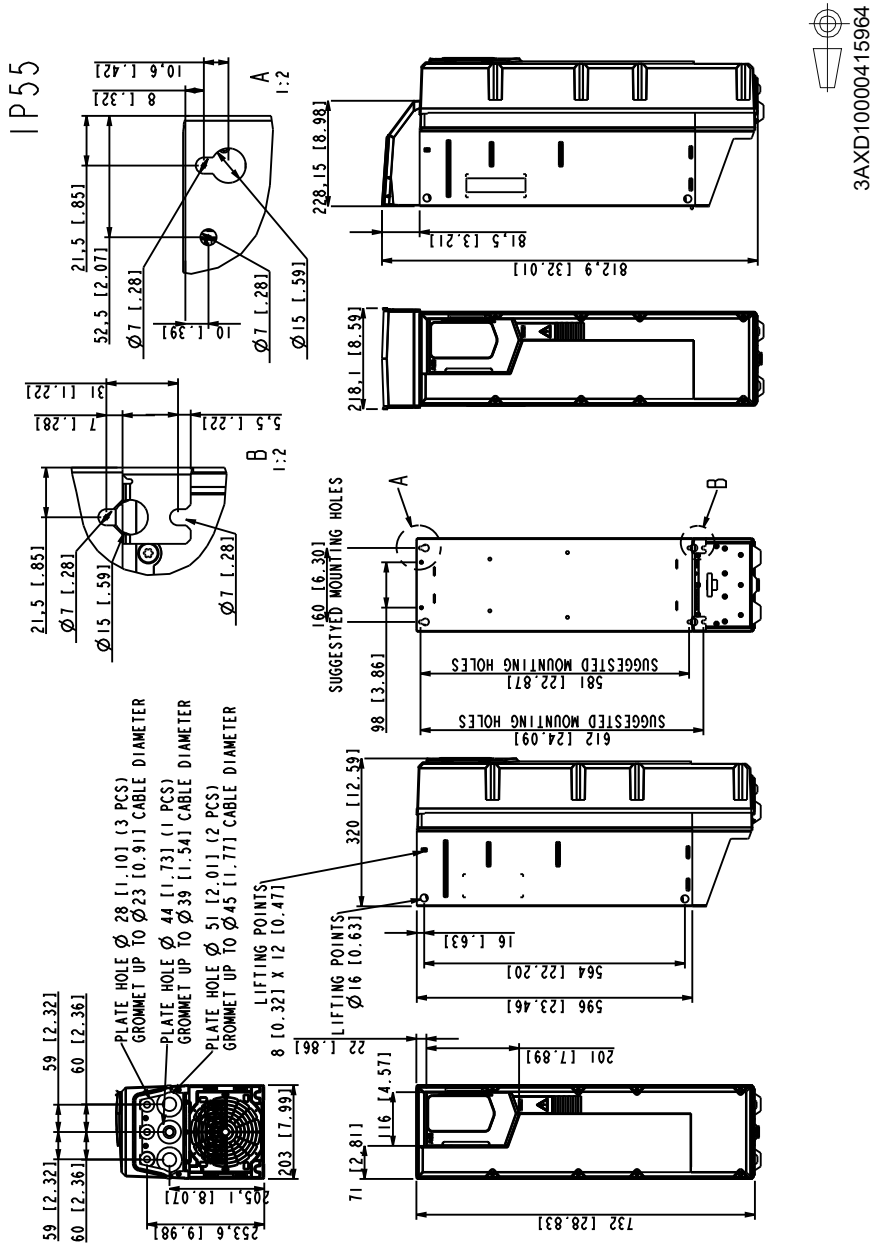

Frame R5, IP55+E223 (UL Type 12)

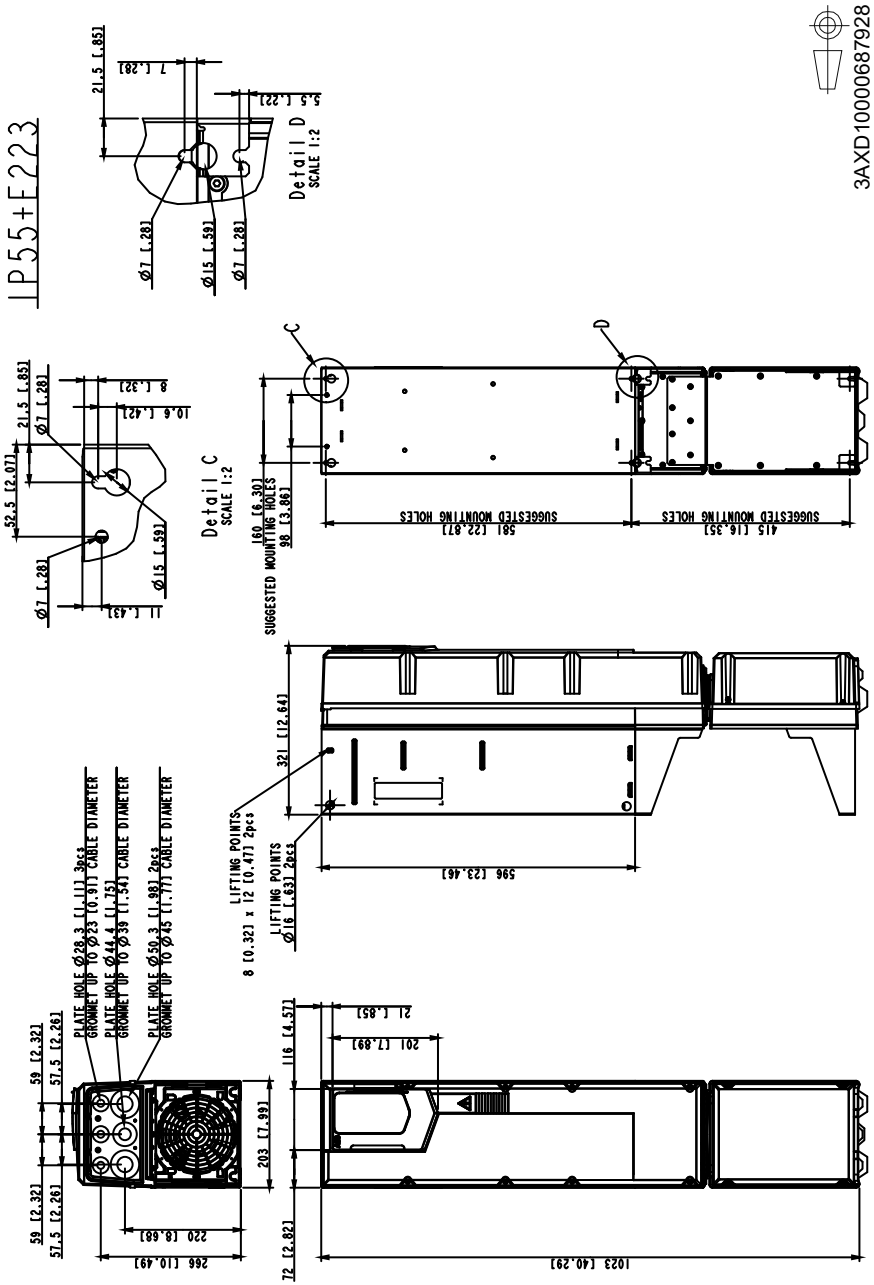

Frame R5, IP55+F278/F316 (UL Type 12)

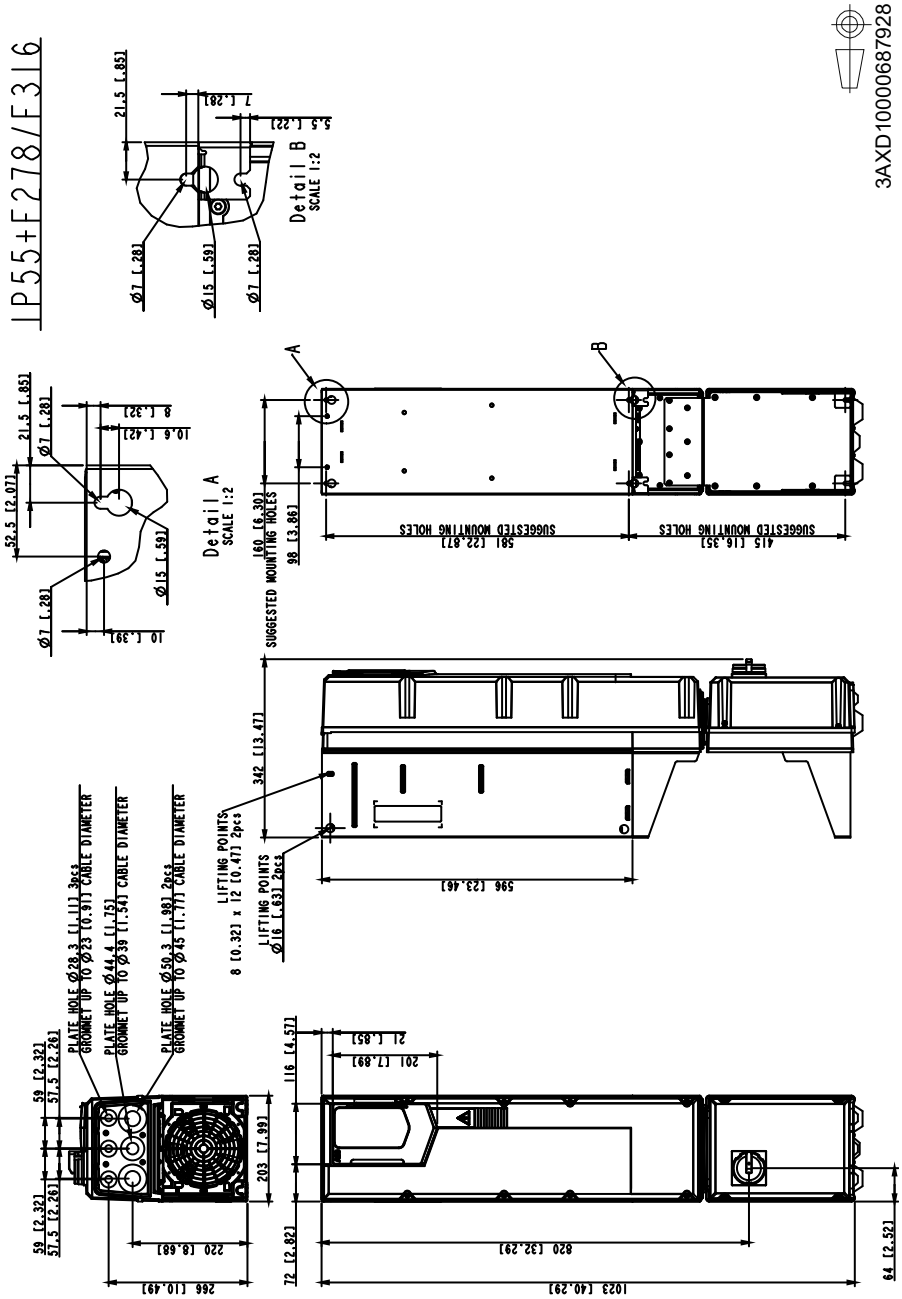

3AXD10000687928

Frame R6, IP21 (UL Type 1)

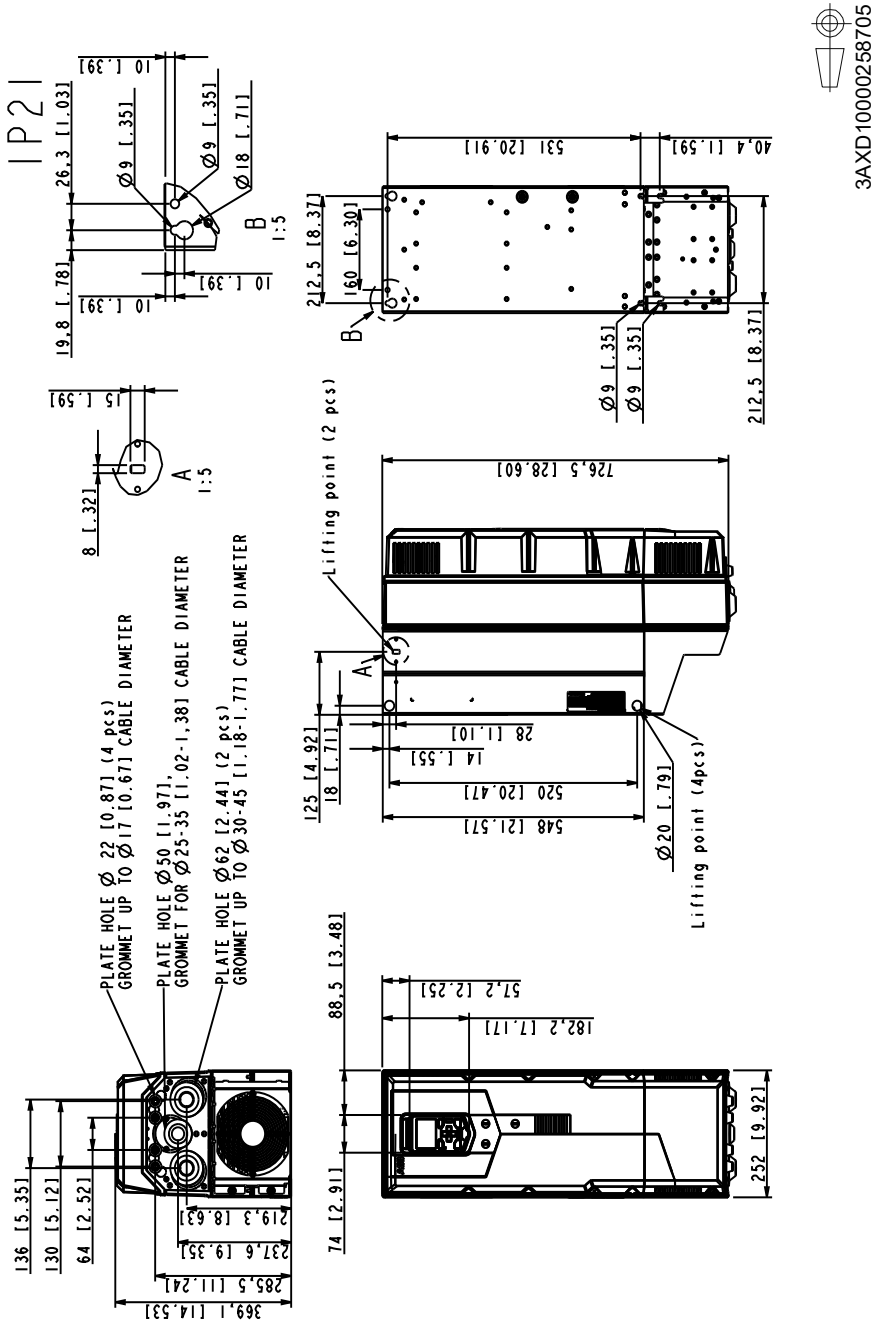

Frame R6, IP55 (UL Type 12)

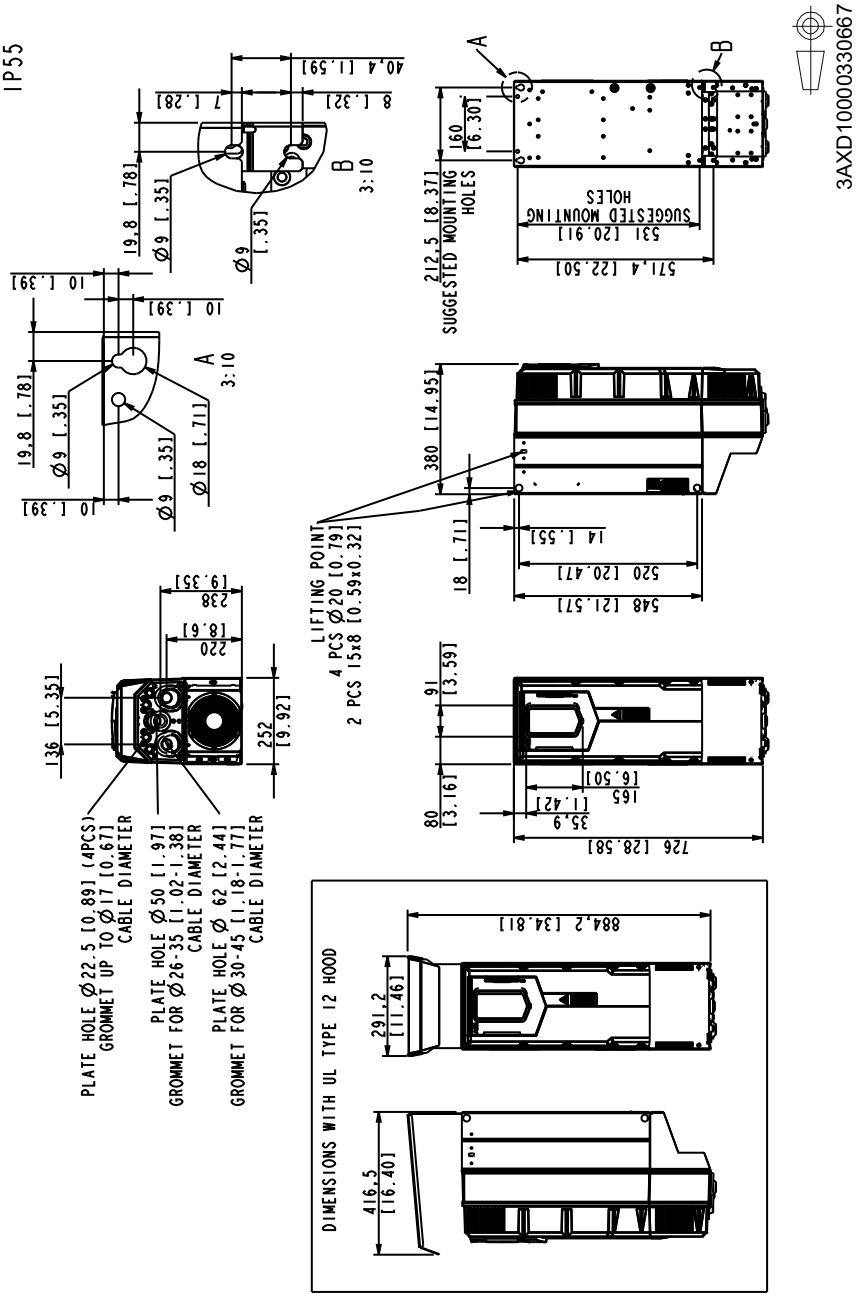

Frame R7, IP21 (UL Type 1)

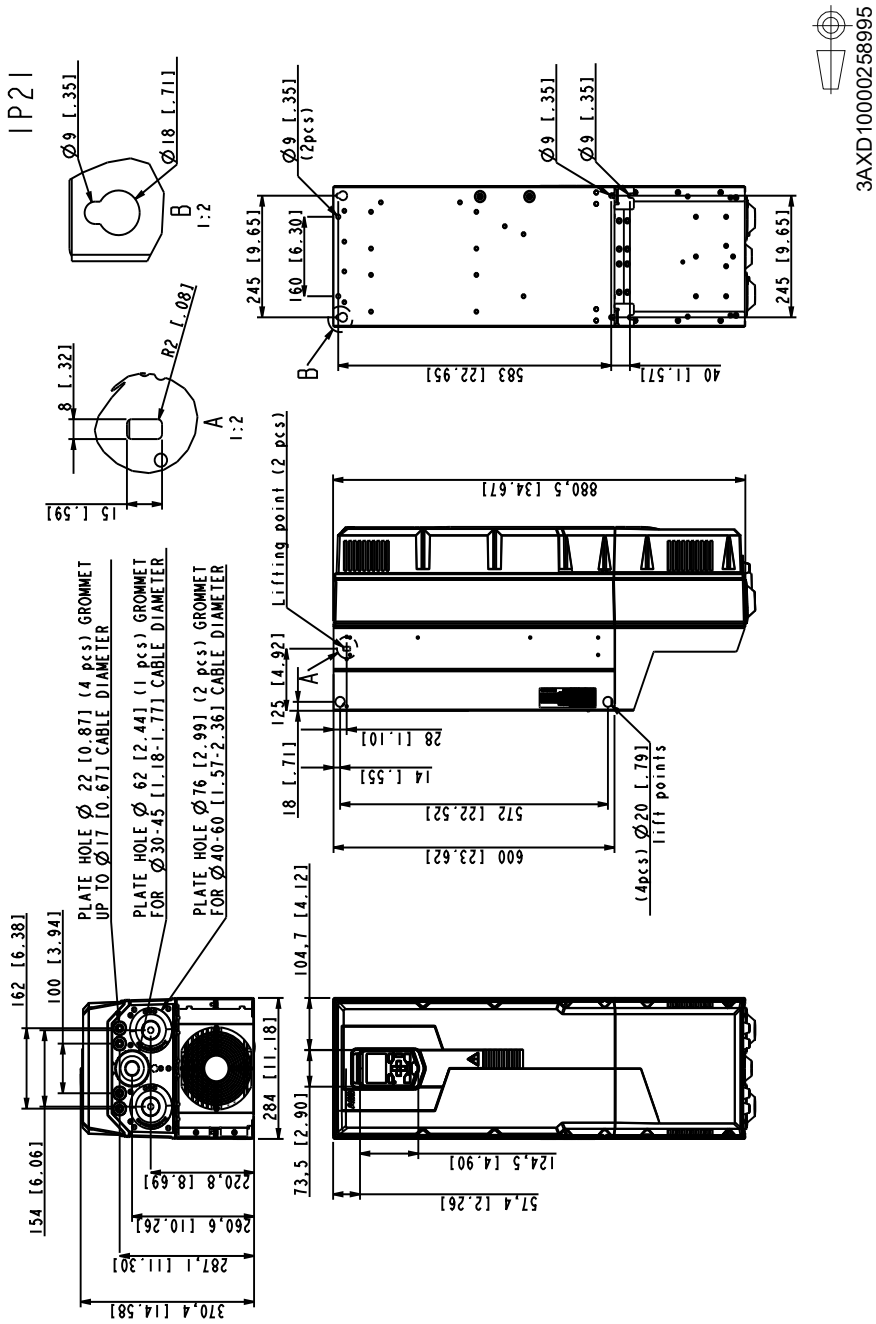

Frame R7, IP55 (UL Type 12)

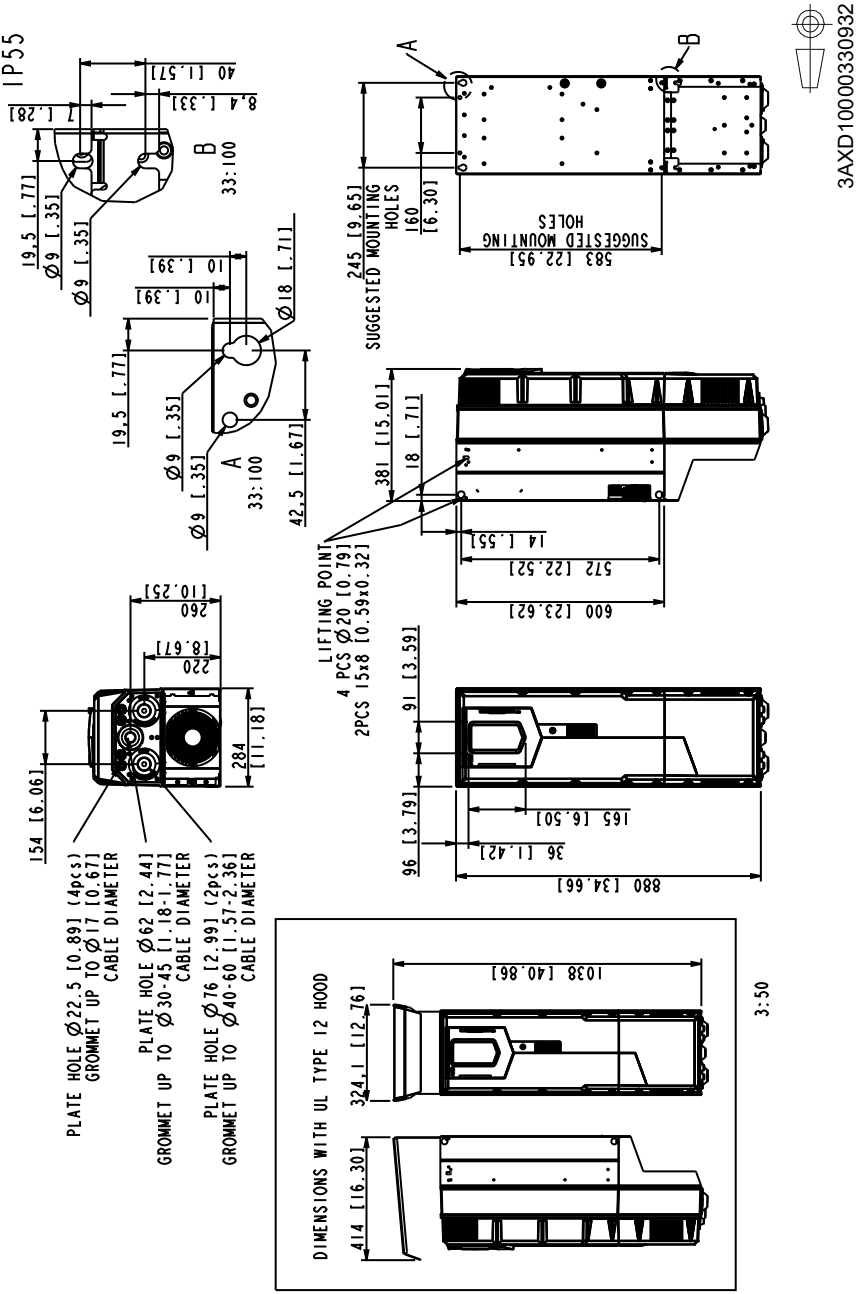

Frame R8, IP21 (UL Type 1)

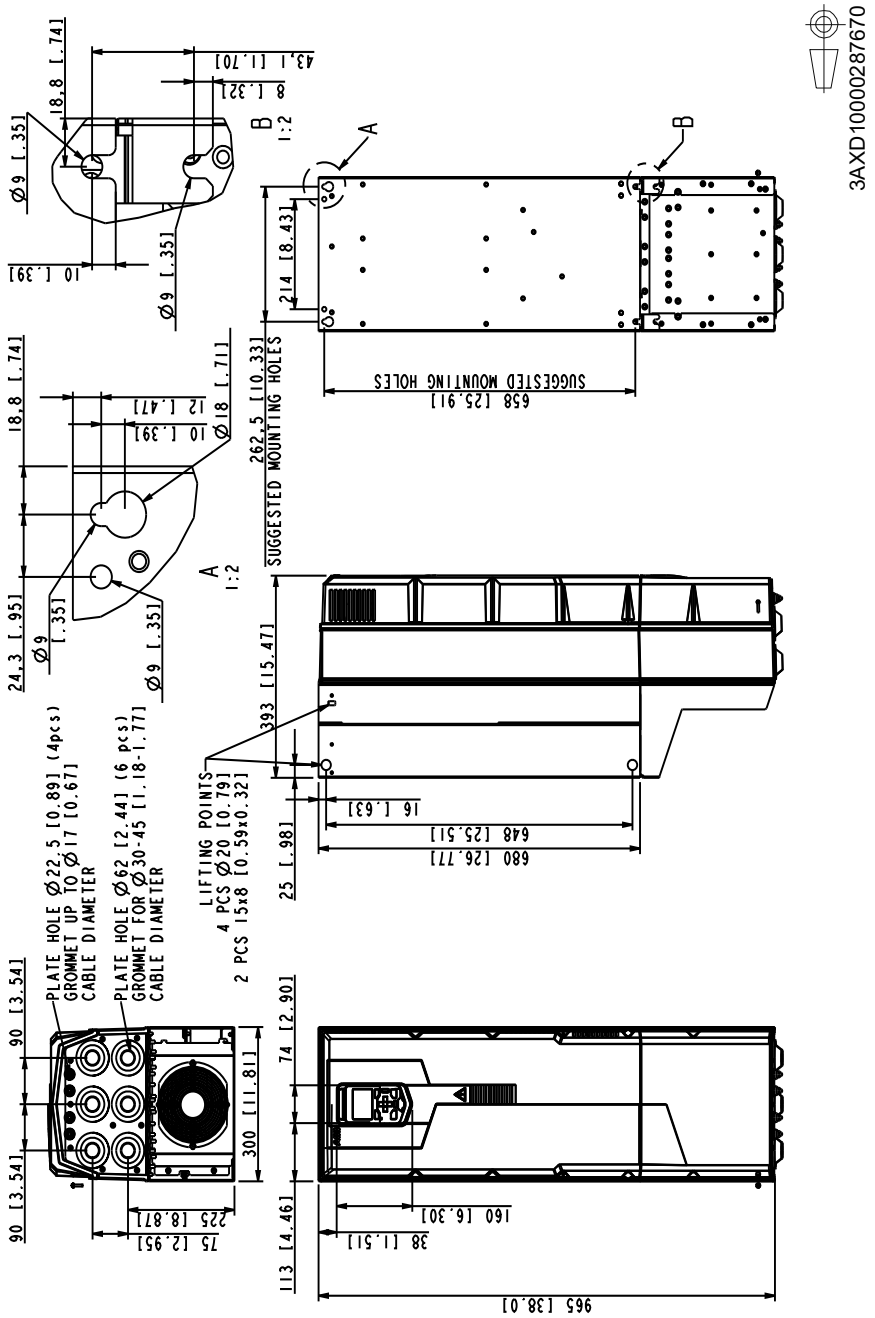

Frame R8, IP55 (UL Type 12)

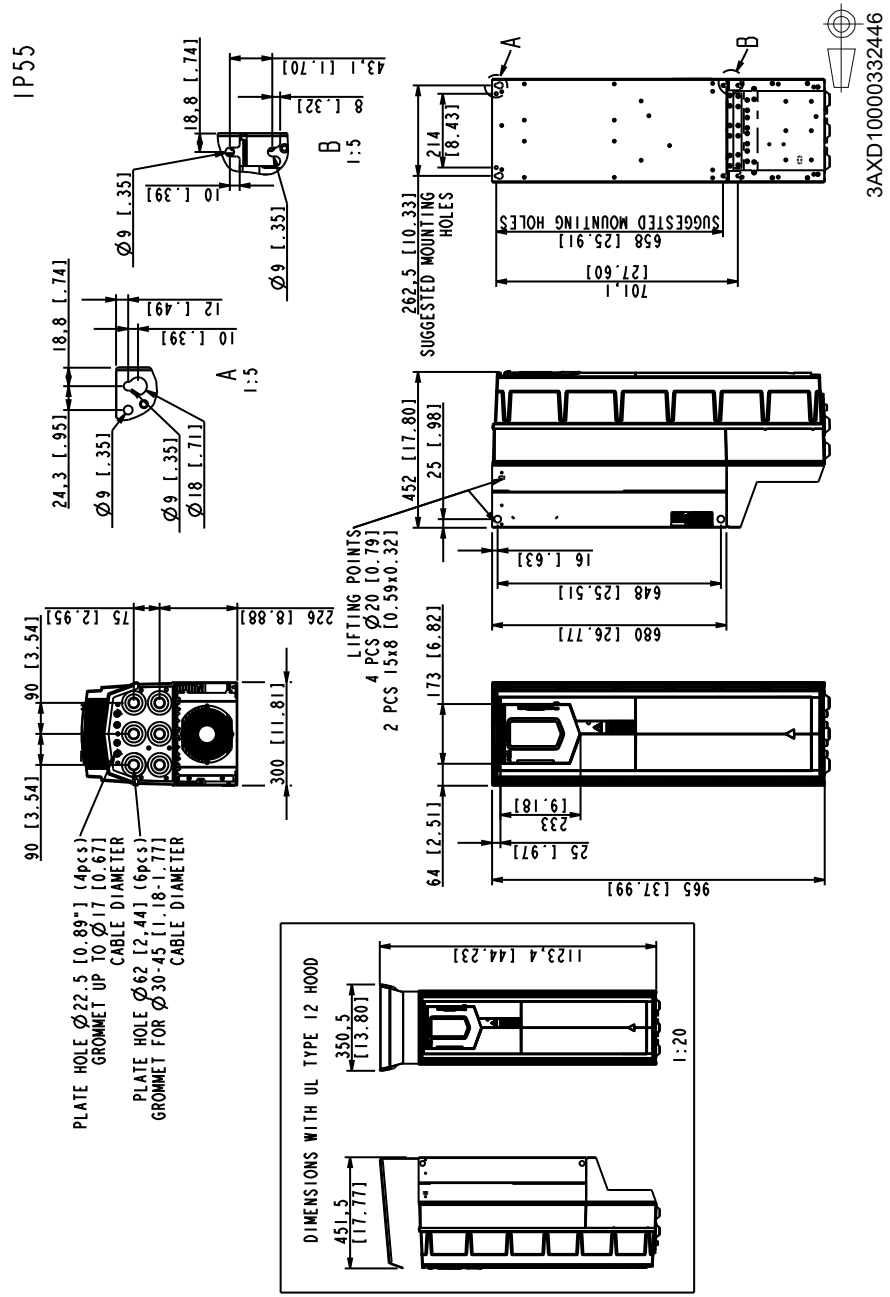

Frame R9, IP21 (UL Type 1)

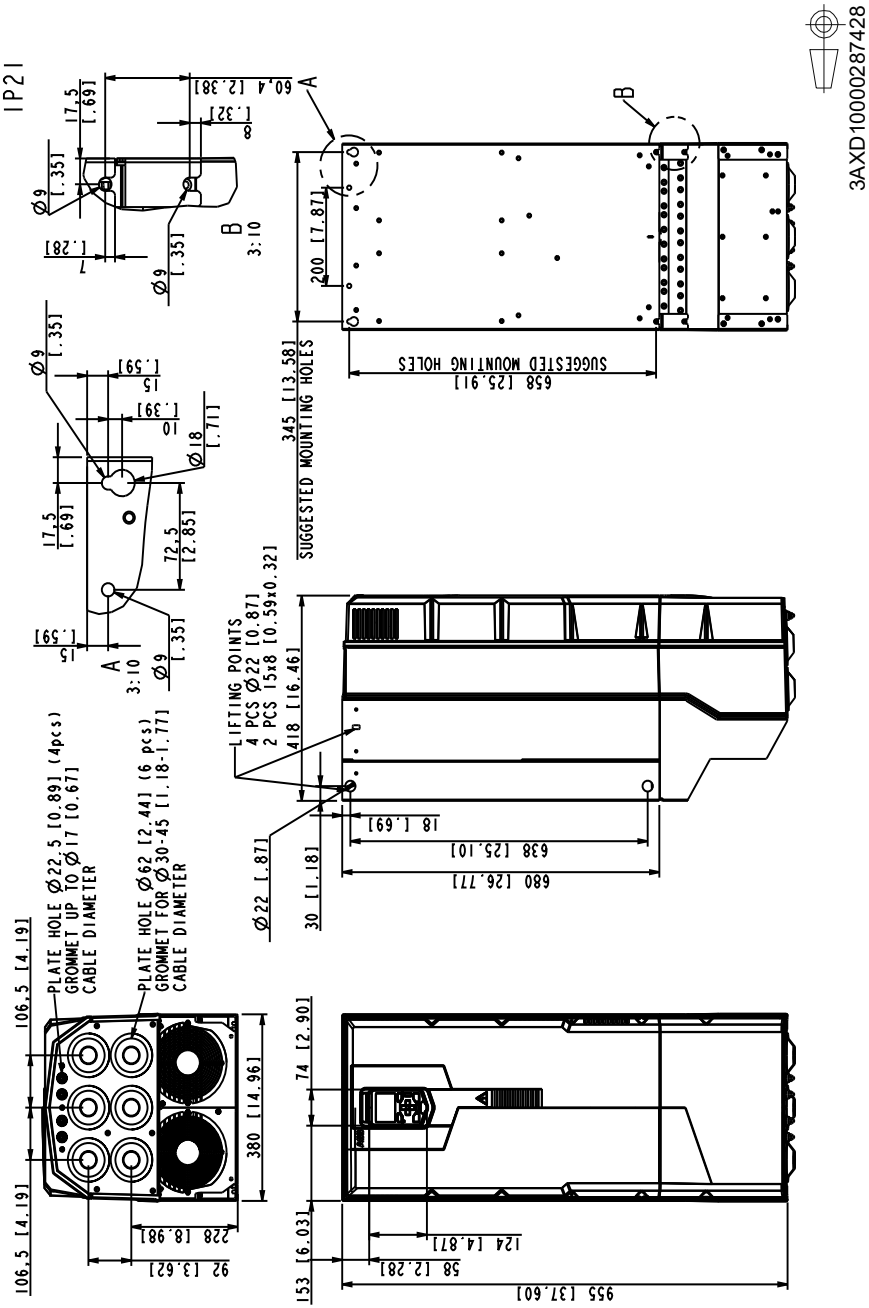

Frame R9, IP55 (UL Type 12)

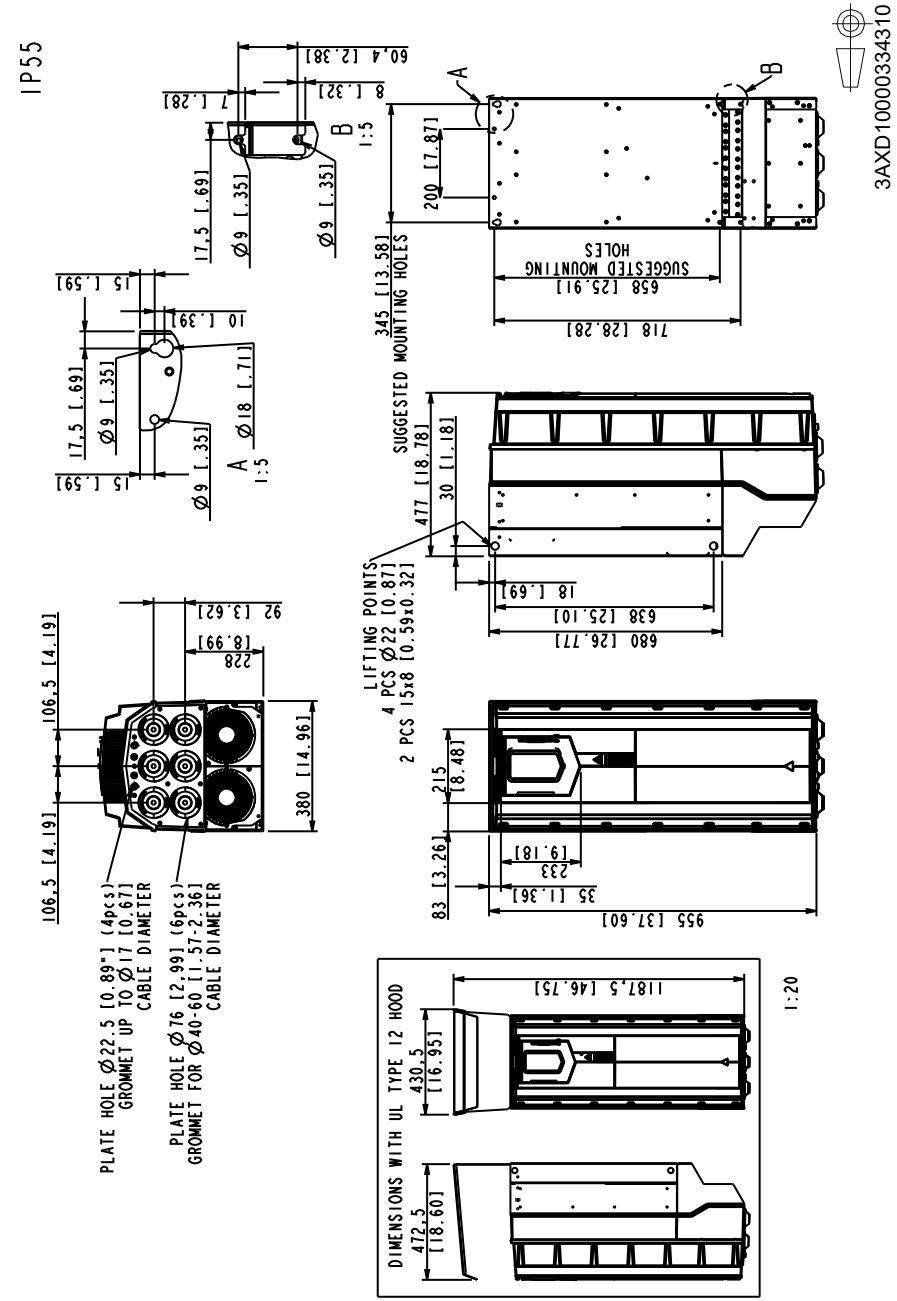

12

Resistor braking

Contents of this chapter

This chapter describes how to select the brake resistor and cables, protect the system, connect the brake resistor and enable resistor braking.

Operation principle and hardware description

The brake chopper handles the energy generated by a decelerating motor. The chopper connects the brake resistor to the intermediate DC circuit whenever the voltage in the circuit exceeds the limit defined by the control program. Energy consumption by the resistor losses lowers the voltage until the resistor can be disconnected.

For frame R1…R3 internal brake choppers and resistors, see below. For R4…R9 external brake choppers and resistors, see *Resistor braking, frames R4…R9* on page *344*.

Resistor braking, frames R1…R3

Planning the braking system

Selecting the brake resistor

Frames R1…R3 have an built-in brake chopper as standard equipment. The brake resistor is selected using the table and equations presented in this section.

1. Determine the required maximum braking power P_{Rmax} for the application. P_{Rmax} must be smaller than P_{BRmax} given in the table on page 339 for the used drive type.
2. Calculate resistance R with Equation 1.
3. Calculate energy E_{Rpulse} with Equation 2.
4. Select the resistor so that the following conditions are met:
   - The rated power of the resistor must be greater than or equal to P_{Rmax}.
   - Resistance R must be between R_{min} and R_{max} given in the table for the used drive type.
   - The resistor must be able to dissipate energy E_{Rpulse} during the braking cycle T.

Equations for selecting the resistor:

Eq. 1. $U_N = 400\text{ V}$: $R = \dfrac{450000}{P_{Rmax}}$

$U_N = 480\text{ V}$: $R = \dfrac{615000}{P_{Rmax}}$

Eq. 2. $E_{Rpulse} = P_{Rmax} \cdot t_{on}$

Eq. 3. $P_{Rave} = P_{Rmax} \cdot \dfrac{t_{on}}{T}$

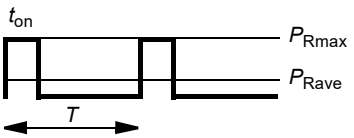

For conversion, use 1 hp = 746 W.

where

R = calculated brake resistor value (ohm). Make sure that: $R_{min} < R < R_{mxx}$.
P_{Rmax} = maximum power during the braking cycle (W)
P_{Rave} = average power during the braking cycle (W)
E_{Rpulse} = energy conducted into the resistor during a single braking pulse (J)
t_{on} = length of the braking pulse (s)
T = length of the braking cycle (s).

The table shows reference resistor types for the maximum braking power.

Type ACH580 -01-	R_{min}	R_{max}	P_{BRmax}		Reference resistor types
	ohm	ohm	kW	hp	Danotherm
3-phase U_N = 400 or 480 V					
02A7-4	52	864	0.6	0.8	CBH 360 C T 406 210R
03A4-4	52	582	0.9	1.2	CBH 360 C T 406 210R
04A1-4	52	392	1.4	1.9	CBH 360 C T 406 210R
05A7-4	52	279	2.0	2.7	CBH 360 C T 406 210R
07A3-4	52	191	2.9	3.9	CBR-V 330 D T 406 78R UL
09A5-4	52	140	3.9	5.2	CBR-V 330 D T 406 78R UL
12A7-4	52	104	5.3	7.1	CBR-V 330 D T 406 78R UL
018A-4	31	75	7.3	9.8	CBR-V 560 D HT 406 39R UL
026A-4	22	52	10	13.6	CBR-V 560 D HT 406 39R UL
033A-4	16	37	15	20.1	CBT-H 560 D HT 406 19R
039A-4	10	27	20	26.8	CBT-H 760 D HT 406 16R
046A-4	10	22	25	33.5	CBT-H 760 D HT 406 16R

3AXD10000395897.xls E

Symbols

R_{min} = minimum allowed brake resistor that can be connected to the brake chopper
R_{max} = maximum allowed brake resistor that allows P_{BRmax}
P_{BRmax} = maximum braking capacity of the drive, must exceed the desired braking power.

WARNING! Do not use a brake resistor with a resistance below the minimum value specified for the particular drive. The drive and the internal chopper are not able to handle the overcurrent caused by the low resistance.

Selecting and routing the brake resistor cables

Use a shielded cable with the conductor size specified in section *Terminal and lead-through data for the power cables* on page *280*.

Minimizing electromagnetic interference

Follow these rules in order to minimize electromagnetic interference caused by the rapid current changes in the resistor cables:

- Install the cables away from other cable routes.
- Avoid long parallel runs with other cables. The minimum parallel cabling separation distance should be 0.3 meters.
- Cross the other cables at right angles.
- Keep the cable as short as possible in order to minimize the radiated emissions and stress on chopper IGBTs. The longer the cable the higher the radiated emissions, inductive load and voltage peaks over the IGBT semiconductors of the brake chopper.

Maximum cable length

The maximum length of the resistor cable(s) is 10 m (33 ft).

EMC compliance of the complete installation

Note: ABB has not verified that the EMC requirements are fulfilled with external user-defined brake resistors and cabling. The EMC compliance of the complete installation must be considered by the customer.

Placing the brake resistor

Install the resistors outside the drive in a place where they will cool.

Arrange the cooling of the resistor in a way that:

- no danger of overheating is caused to the resistor or nearby materials
- the temperature of the room the resistor is located in does not exceed the allowed maximum.

Supply the resistor with cooling air/water according to the resistor manufacturer's instructions.

WARNING! The materials near the brake resistor must be non-flammable. The surface temperature of the resistor is high. Air flowing from the resistor is of hundreds of degrees Celsius. If the exhaust vents are connected to a ventilation system, ensure that the material withstands high temperatures. Protect the resistor against physical contact.

Protecting the system in brake circuit fault situations

Protecting the system in cable and brake resistor short-circuit situations

The input fuses will also protect the resistor cable when it is identical with the input cable.

Protecting the system against thermal overload

Equipping the drive with a main contactor is highly recommended for safety reasons. Wire the contactor so that it opens in case the resistor overheats. This is essential for safety since the drive will not otherwise be able to interrupt the main supply if the chopper remains conductive in a fault situation. An example wiring diagram is shown below. We recommend that you use resistors equipped with a thermal switch (1) inside the resistor assembly. The switch indicates overtemperature and overload.

We recommend that you also wire the thermal switch to a digital input of the drive.

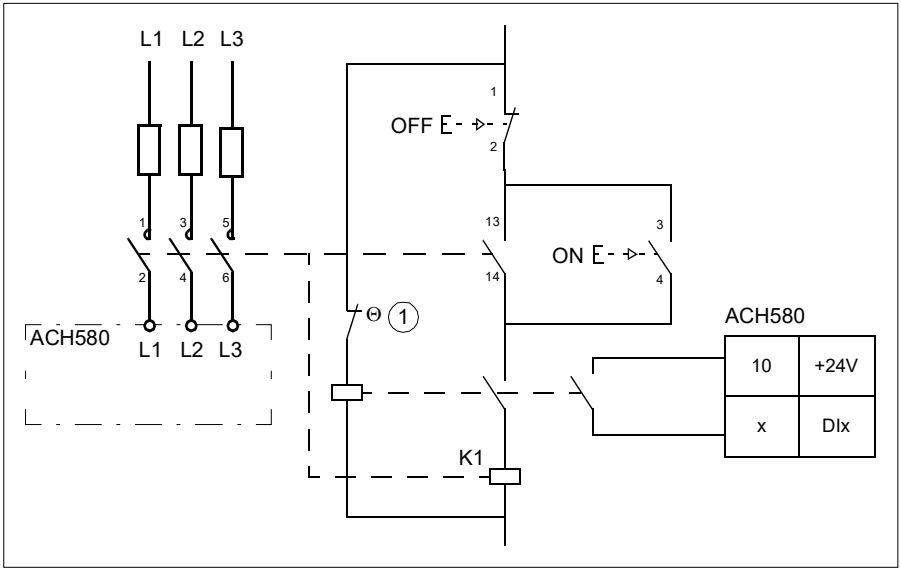

Mechanical installation

All brake resistors must be installed outside the drive. Follow the resistor manufacturer's instructions.

Electrical installation

Checking the insulation of the assembly

Follow the instructions given in section *Brake resistor assembly for R1…R3* on page *115* (IEC) or *Brake resistor assembly for R1…R3* on page *169* (North America).

Connection diagram

See section *Connection diagram* page *123* (IEC) or *Connection diagram* on page *178* (North America).

Connection procedure

See section *Grounding shelf* on page *129* (IEC).

Connect the thermal switch of the brake resistor as described in section *Protecting the system against thermal overload* on page *341*.

Start-up

Note: Protective oil on the brake resistors will burn off when the brake resistor is used for the first time. Make sure that the airflow is sufficient.

Set the following parameters:

1. Disable the overvoltage control of the drive with parameter 30.30 Overvoltage control.
2. Set the source of parameter 31.01 External event 1 source to point to the digital input where the thermal switch of the brake resistor is wired.
3. Set parameter 31.02 External event 1 type to Fault.
4. Enable the brake chopper by parameter 43.06 Brake chopper enable. If Enabled with thermal model is selected, set also the brake resistor overload protection parameters 43.08 and 43.09 according to the application.
5. Check the resistance value of parameter 43.10 Brake resistance.

With these parameter settings, the drive generates a fault and coasts to a stop on brake resistor overtemperature.

WARNING! If the drive is equipped with a brake chopper but the chopper is not enabled by the parameter setting, the internal thermal protection of the drive against resistor overheating is not in use. In this case, the brake resistor must be disconnected.

Resistor braking, frames R4…R9

Planning the braking system

Frames R4…R9 need external brake choppers and resistors. The table below lists suitable choppers and resistors.

For more information, see *NBRA-6xx Braking Choppers Installation and start-up guide* (3AFY58920541 [English]) and *ACS-BRK Brake Units Installation and start-up guide* (3AFY61514309 [English]).

Type ACH580-01	Brake chopper	R_{min}	R_{max}	P_{BRmax}		Reference resistor types[1)]
		ohm	ohm	kW	hp	
3-phase U_N = 400 or 480 V (380…415 V, 440…480 V)						
062A-4	ACS-BRK-D	7.8	18.1	30	40.2	Built in with the brake chopper
073A-4	ACS-BRK-D	7.8	13.1	42	56.3	Built in with the brake chopper
088A-4	ACS-BRK-D	7.8	10.7	51	68.4	Built in with the brake chopper
106A-4	NBRA-658	1.3	8.7	63	84.5	SAFUR125F500
145A-4	NBRA-658	1.3	7.1	77	103.2	SAFUR125F500
169A-4	NBRA-658	1.3	5.2	105	140.8	SAFUR200F500
206A-4	NBRA-658	1.3	4.3	126	168.9	SAFUR200F500
246A-4	NBRA-658	1.3	3.5	156	209.1	2xSAFUR125F500
293A-4	NBRA-658	1.3	2.9	187	250.7	2xSAFUR210F575
363A-4	NBRA-659	0.7	2.4	227	304.3	2xSAFUR200F500
430A-4	NBRA-659	0.7	1.9	284	380.7	2xSAFUR200F500

[1)] Other resistors can be used if they meet the minimum resistance value and required power values.

3AXD10000395897.xls E

Symbols

R_{min} = minimum allowed brake resistor that can be connected to the brake chopper
R_{max} = maximum allowed brake resistor that allows P_{BRmax}
P_{BRmax} = maximum braking capacity of the drive, must exceed the desired braking power.

13

Safe torque off function

Contents of this chapter

This chapter describes the Safe torque off (STO) function of the drive and gives instructions for its use.

Description

The Safe torque off function can be used, for example, as the final actuator device of safety circuits that stop the drive in case of danger (such as an emergency stop circuit). Another typical application is a prevention of unexpected start-up function that enables short-time maintenance operations like cleaning or work on non-electrical parts of the machinery without switching off the power supply to the drive.

When activated, the Safe torque off function disables the control voltage of the power semiconductors of the drive output stage (A, see diagram on page *347*), thus preventing the drive from generating the torque required to rotate the motor. If the motor is running when Safe torque off is activated, it coasts to a stop.

The Safe torque off function has a redundant architecture, that is, both channels must be used in the safety function implementation. The safety data given in this manual is calculated for redundant use, and does not apply if both channels are not used.

The Safe torque off function of the drive complies with these standards:

Standard	Name
IEC 60204-1:2016 EN 60204-1:2006 + A1:2009 + AC:2010	*Safety of machinery – Electrical equipment of machines – Part 1: General requirements*
IEC 61000-6-7:2014	*Electromagnetic compatibility (EMC) – Part 6-7: Generic standards – Immunity requirements for equipment intended to perform functions in a safety-related system (functional safety) in industrial locations*
IEC 61326-3-1:2017	*Electrical equipment for measurement, control and laboratory use – EMC requirements – Part 3-1: Immunity requirements for safety-related systems and for equipment intended to perform safety-related functions (functional safety) – General industrial applications*
IEC 61508-1:2010	*Functional safety of electrical/electronic/programmable electronic safety-related systems – Part 1: General requirements*
IEC 61508-2:2010	*Functional safety of electrical/electronic/programmable electronic safety-related systems – Part 2: Requirements for electrical/electronic/programmable electronic safety-related systems*
IEC 61511-1:2016	*Functional safety – Safety instrumented systems for the process industry sector*
IEC 61800-5-2:2016 EN 61800-5-2:2007	*Adjustable speed electrical power drive systems – Part 5-2: Safety requirements – Functional*
IEC 62061:2005 + A1:2012 + A2:2015 EN 62061:2005 + AC:2010 + A1:2013 +A2:2015	*Safety of machinery – Functional safety of safety-related electrical, electronic and programmable electronic control systems*
EN ISO 13849-1:2015	*Safety of machinery – Safety-related parts of control systems – Part 1: General requirements*
EN ISO 13849-2:2012	*Safety of machinery – Safety-related parts of control systems – Part 2: Validation*

The function also corresponds to Prevention of unexpected start-up as specified by EN 1037:1995 + A1:2008 and Uncontrolled stop (stop category 0) as specified in EN/IEC 60204-1.

Compliance with the European Machinery Directive

See section *Compliance with the European Machinery Directive 2006/42/EC 2nd Edition – June 2010* on page 300.

Connection principle

Connection with internal +24 V DC power supply

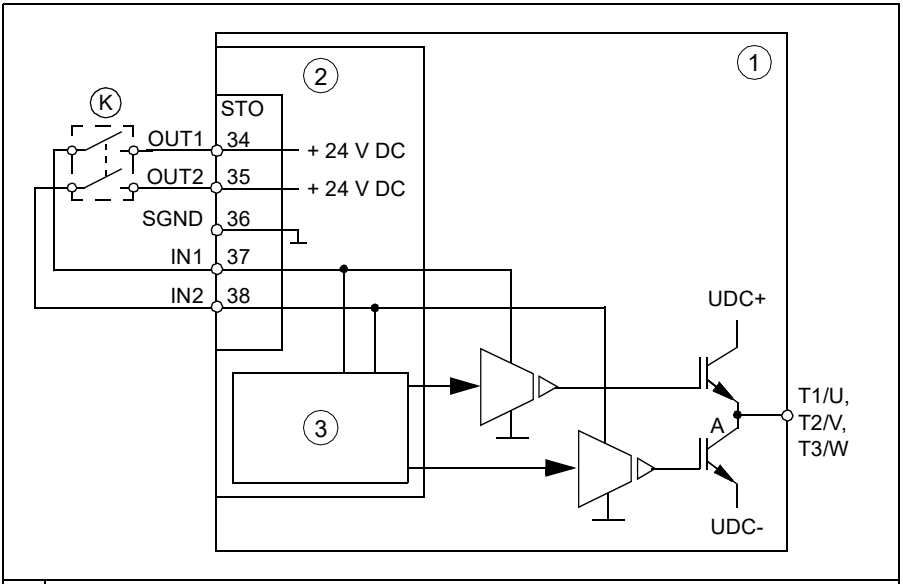

1	Drive
2	Control board
3	Control logic

Connection with internal +24 V DC power supply, single-channel

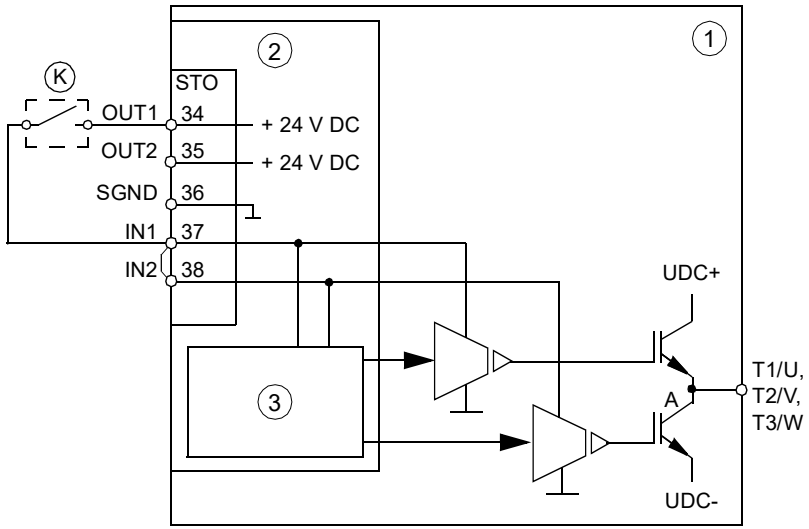

1	Drive
2	Control board
3	Control logic

Notes:

- Both STO inputs (IN1, IN2) must be connected to the activation switch. Otherwise, no SIL/PL classification is given.
- Pay special attention to avoiding any potential failure modes for the wiring. For example, use shielded cable. For measures for fault exclusion of wiring, see eg. EN ISO 13849-2:2012, table D.4.

Connection with external +24 V DC power supply

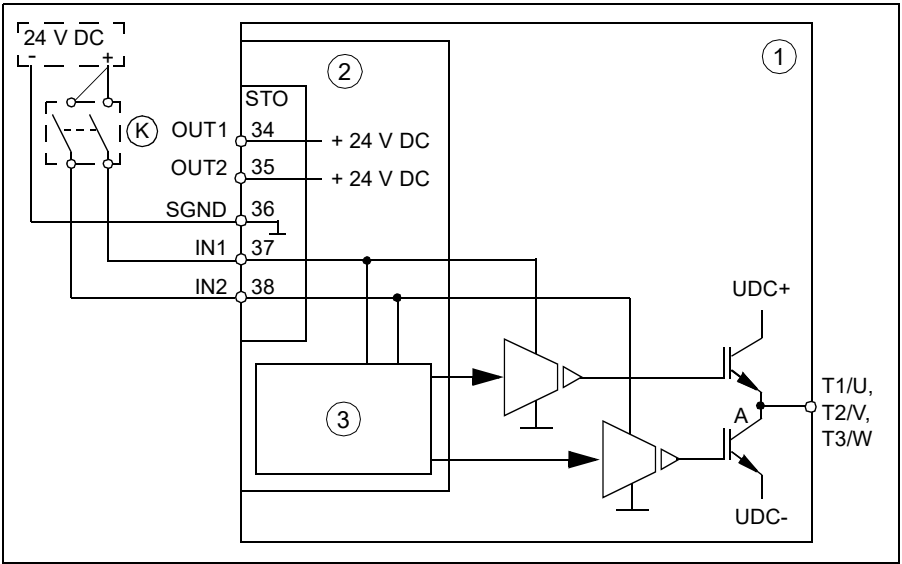

1	Drive
2	Control board
3	Control logic

Wiring examples

An example of a Safe torque off wiring with internal +24 V DC power supply is shown below.

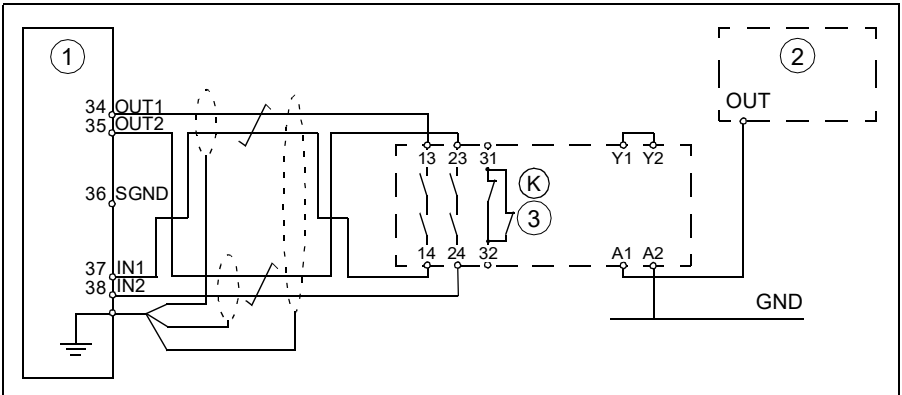

1	Drive
2	Safety PLC
3	Safety relay

An example of a Safe torque off wiring with external +24 V DC power supply is shown below.

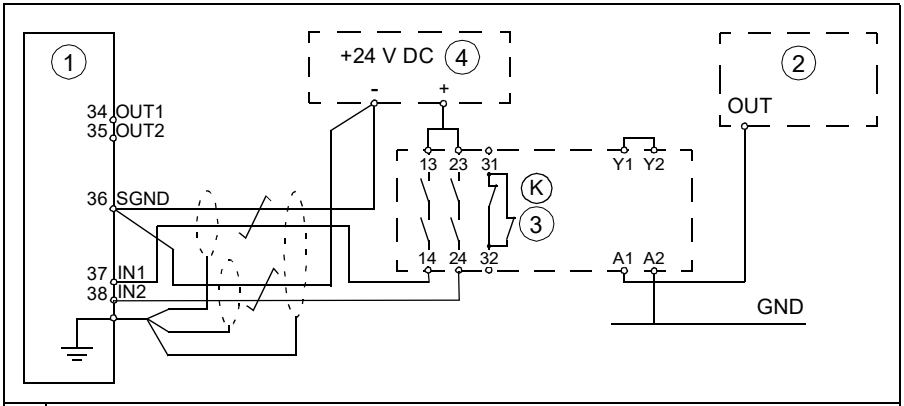

1	Drive
2	Safety PLC
3	Safety relay
4	+24 V DC external power supply

For information on the specifications of the STO input, see chapter *Control connection data* (page *289*).

Activation switch

In the wiring diagrams above, the activation switch has the designation (K). This represents a component such as a manually operated switch, an emergency stop push button switch, or the contacts of a safety relay or safety PLC.

- If a manually operated activation switch is used, the switch must be of a type that can be locked out to the open position.
- The STO inputs must be switched on/off within 200 ms of each other.
- A CPTC-02 thermistor protection module can also be used. For more information, see the module documentation.

Cable types and lengths

- Double-shielded twisted-pair cable is recommended.
- Maximum cable length 300 m (984 ft) between activation switch (K) and drive control board.

Note: A short-circuit in the wiring between the switch and an STO terminal causes a dangerous fault. Therefore, it is recommended to use a safety relay (including wiring diagnostics), or a wiring method (shield grounding, channel separation) which reduces or eliminates the risk caused by the short-circuit.

Note: The voltage at the INx terminals of the drive must be at least 13 V DC to be interpreted as “1”. The pulse tolerance of the input channels is 1 ms.

Grounding of protective shields

- Ground the shield in the cabling between the activation switch and the control board at the control board.
- Ground the shield in the cabling between two control boards at one control board only.

Operation principle

1. The Safe torque off activates (the activation switch is opened, or safety relay contacts open).
2. The STO inputs of the drive control board de-energize.
3. The control board cuts off the control voltage from the output IGBTs.
4. The control program generates an indication as defined by parameter *31.22* (refer to the firmware manual of the drive).

   The parameter selects which indications are given when one or both STO signals are switched off or lost. The indications also depend on whether the drive is running or stopped when this occurs.

   Note: This parameter does not affect the operation of the STO function itself. The STO function will operate regardless of the setting of this parameter: a running drive will stop upon removal of one or both STO signals, and will not start until both STO signals are restored and all faults reset.

   Note: The loss of only one STO signal always generates a fault as it is interpreted as a malfunction of STO hardware or wiring.
5. The motor coasts to a stop (if running). The drive cannot restart while the activation switch or safety relay contacts are open. After the contacts close, a reset may be needed (depending on the setting of parameter *31.22*). A new start command is required to start the drive.

Start-up including acceptance test

To ensure the safe operation of a safety function, validation is required. The final assembler of the machine must validate the function by performing an acceptance test. The acceptance test must be performed

- at initial start-up of the safety function
- after any changes related to the safety function (circuit boards, wiring, components, settings, etc.)
- after any maintenance work related to the safety function.

Competence

The acceptance test of the safety function must be carried out by an competent person with adequate expertise and knowledge of the safety function as well as functional safety, as required by IEC 61508-1 clause 6. The test procedures and report must be documented and signed by this person.

Acceptance test reports

Signed acceptance test reports must be stored in the logbook of the machine. The report shall include documentation of start-up activities and test results, references to failure reports and resolution of failures. Any new acceptance tests performed due to changes or maintenance shall be logged into the logbook.

Acceptance test procedure

After wiring the Safe torque off function, validate its operation as follows.

If a CPTC-02 module is installed, refer to its documentation.

Action	☑
WARNING! Follow the *Safety instructions*, page *15*. If you ignore them, injury or death, or damage to the equipment can occur.	☐
Ensure that the drive can be run and stopped freely during start-up.	☐
Stop the drive (if running), switch the input power off and isolate the drive from the power line by a disconnector.	☐
Check the Safe torque off circuit connections against the wiring diagram.	☐
Close the disconnector and switch the power on.	☐
Test the operation of the STO function when the motor is stopped. • Give a stop command for the drive (if running) and wait until the motor shaft is at a standstill. Ensure that the drive operates as follows: • Open the STO circuit. The drive generates an indication if one is defined for the 'stopped' state in parameter *31.22* (see the firmware manual). • Give a start command to verify that the STO function blocks the drive's operation. The drive generates a warning. The motor should not start. • Close the STO circuit. • Reset any active faults. Restart the drive and check that the motor runs normally.	☐
Test the operation of the STO function when the motor is running. • Start the drive and ensure the motor is running. • Open the STO circuit. The motor should stop. The drive generates an indication if one is defined for the 'running' state in parameter *31.22* STO indication run/stop (see the firmware manual). • Reset any active faults and try to start the drive. • Ensure that the motor stays at a standstill and the drive operates as described above in testing the operation when the motor is stopped. • Close the STO circuit. • Reset any active faults. Restart the drive and check that the motor runs normally.	☐

Action	☑
Test the operation of the failure detection of the drive. The motor can be stopped or running. • Open the 1st channel of the STO circuit (wire coming to IN1). If the motor was running, it should coast to a stop. The drive generates a *FA81 Safe torque off 1 loss* fault indication (see the firmware manual). • Give a start command to verify that the STO function blocks the drive's operation. The motor should not start. • Close the STO circuit. • Reset any active faults. Restart the drive and check that the motor runs normally. • Open the 2nd channel of the STO circuit (wire coming to IN2). If the motor was running, it should coast to a stop. The drive generates a *FA82 Safe torque off 2 loss* fault indication (see the firmware manual). • Give a start command to verify that the STO function blocks the drive's operation. The motor should not start. • Close the STO circuit. • Reset any active faults. Restart the drive and check that the motor runs normally.	☐
Document and sign the acceptance test report which verifies that the safety function is safe and accepted for operation.	☐

Use

1. Open the activation switch, or activate the safety functionality that is wired to the STO connection.
2. The STO inputs of the drive control board de-energize, and the drive control board cuts off the control voltage from the output IGBTs.
3. The control program generates an indication as defined by parameter *31.22* (refer to the firmware manual of the drive).
4. The motor coasts to a stop (if running). The drive will not restart while the activation switch or safety relay contacts are open.
5. Deactivate the STO by closing the activation switch, or reseting the safety functionality that is wired to the STO connection.
6. Reset any faults before restarting.

WARNING! The Safe torque off function does not disconnect the voltage of the main and auxiliary circuits from the drive. Therefore maintenance work on electrical parts of the drive or the motor can only be carried out after isolating the drive from the supply.

WARNING! (With permanent magnet motors or synchronous reluctance [SynRM] motors only) In case of a multiple IGBT power semiconductor failure, the drive can produce an alignment torque which maximally rotates the motor shaft by 180/*p* degrees (with permanent magnet motors) or 180/2*p* degrees (with synchronous reluctance [SynRM] motors) regardless of the activation of the Safe torque off function. *p* denotes the number of pole pairs.

Notes:

- If a running drive is stopped by using the Safe torque off function, the drive will cut off the motor supply voltage and the motor will coast to a stop. If this causes danger or is not otherwise acceptable, stop the drive and machinery using the appropriate stop mode before activating the Safe torque off function.
- The Safe torque off function overrides all other functions of the drive unit.
- The Safe torque off function is ineffective against deliberate sabotage or misuse.
- The Safe torque off function has been designed to reduce the recognized hazardous conditions. In spite of this, it is not always possible to eliminate all potential hazards. The assembler of the machine must inform the final user about the residual risks.
- The Safe torque off diagnostics are not available during power outages, or when the drive is only powered by a CMOD-xx multifunction extension module.

Maintenance

After the operation of the circuit is validated at start-up, the STO function shall be maintained by periodic proof testing. In high demand mode of operation, the maximum proof test interval is 20 years. In low demand mode of operation, the maximum proof test interval is 5 or 2 years; see section *Safety data* (page *358*). It is assumed that all dangerous failures of the STO circuit are detected by the proof test. To perform the proof test, do the *Acceptance test procedure* (page *353*).

Note: See also the Recommendation of Use CNB/M/11.050 (published by the European co-ordination of Notified Bodies) concerning dual-channel safety-related systems with electromechanical outputs:

- When the safety integrity requirement for the safety function is SIL 3 or PL e (cat. 3 or 4), the proof test for the function must be performed at least every month.
- When the safety integrity requirement for the safety function is SIL 2 (HFT = 1) or PL d (cat. 3), the proof test for the function must be performed at least every 12 months.

The STO function does not contain any electromechanical components.

In addition to proof testing, it is a good practice to check the operation of the function when other maintenance procedures are carried out on the machinery.

Include the Safe torque off operation test described above in the routine maintenance program of the machinery that the drive runs.

If any wiring or component change is needed after start up, or the parameters are restored, follow the test given in section *Acceptance test procedure* (page *353*).

Use only spare parts approved by ABB.

Record all maintenance and proof test activities in the machine logbook.

Competence

The maintenance and proof test activities of the safety function must be carried out by a competent person with adequate expertise and knowledge of the safety function as well as functional safety, as required by IEC 61508-1 clause 6.

Fault tracing

The indications given during the normal operation of the Safe torque off function are selected by drive parameter *31.22*. The indications can be read via fieldbus. The indications are not safety-classified signals.

The diagnostics of the Safe torque off function cross-compare the status of the two STO channels. In case the channels are not in the same state, a fault reaction function is performed and the drive trips on an “STO hardware failure” fault. An attempt to use the STO in a non-redundant manner, for example activating only one channel, will trigger the same reaction.

See the drive firmware manual for the indications generated by the drive, and for details on directing fault and warning indications to an output on the control board for external diagnostics.

Any failures of the Safe torque off function must be reported to ABB.

Safety data

The safety data for the Safe torque off function is given below.

Note: The safety data is calculated for redundant use, and does not apply if both STO channels are not used.

Frame size	SIL/ SILCL	PL	SFF (%)	PFH (T_1 = 20 a) (1/h)	PFD_{avg} (T_1 = 2 a)	PFD_{avg} (T_1 = 5 a)	$MTTF_D$ (a)	DC (%)	Cat.	SC	HFT	CCF	T_M (a)
U_N=230 V													
R1	3	e	>99	2.79E-09	2.34E-05	5.83E-05	2755	≥90	3	3	1	80	20
R2	3	e	>99	2.79E-09	2.34E-05	5.83E-05	2756	≥90	3	3	1	80	20
R3	3	e	>99	2.54E-09	2.23E-05	5.54E-05	2964	≥90	3	3	1	80	20
R4	3	e	>99	2.53E-09	2.23E-05	5.54E-05	2965	≥90	3	3	1	80	20
R5	3	e	>99	2.54E-09	2.23E-05	5.54E-05	2964	≥90	3	3	1	80	20
R6	3	e	>99	8.26E-10	7.52E-06	1.83E-05	8046	≥90	3	3	1	80	20
R7	3	e	>99	8.26E-10	7.52E-06	1.83E-05	8046	≥90	3	3	1	80	20
R8	3	e	>99	8.26E-10	7.52E-06	1.83E-05	8046	≥90	3	3	1	80	20
U_N=400 V													
R1	3	e	>99	2.53E-09	2.23E-05	5.53E-05	2966	≥90	3	3	1	80	20
R2	3	e	>99	2.53E-09	2.23E-05	5.54E-05	2966	≥90	3	3	1	80	20
R3	3	e	>99	2.53E-09	2.23E-05	5.54E-05	2965	≥90	3	3	1	80	20
R4	3	e	>99	2.53E-09	2.23E-05	5.54E-05	2965	≥90	3	3	1	80	20
R5	3	e	>99	2.54E-09	2.23E-05	5.54E-05	2965	≥90	3	3	1	80	20
R6	3	e	>99	8.26E-10	7.52E-06	1.83E-05	8046	≥90	3	3	1	80	20
R7	3	e	>99	8.26E-10	7.52E-06	1.83E-05	8046	≥90	3	3	1	80	20
R8	3	e	>99	1.15E-09	1.03E-05	2.11E-05	5784	≥90	3	3	1	80	20
R9	3	e	>99	1.15E-09	1.03E-05	2.11E-05	5784	≥90	3	3	1	80	20
U_N=600 V													
R2	3	e	>99	2.67E-09	2.24E-05	5.57E-05	2920	≥90	3	3	1	80	20
R3	3	e	>99	2.54E-09	2.23E-05	5.54E-05	2965	≥90	3	3	1	80	20
R5	3	e	>99	2.54E-09	2.23E-05	5.54E-05	2964	≥90	3	3	1	80	20
R6	3	e	>99	1.15E-09	1.03E-05	2.11E-05	5784	≥90	3	3	1	80	20
R7	3	e	>99	1.15E-09	1.03E-05	2.11E-05	5784	≥90	3	3	1	80	20
R8	3	e	>99	1.15E-09	1.03E-05	2.11E-05	5784	≥90	3	3	1	80	20

3AXD10000776787 A, 3AXD10000015777 H

- The following temperature profile is used in safety value calculations:
  - 670 on/off cycles per year with $\triangle T$ = 71.66 °C
  - 1340 on/off cycles per year with $\triangle T$ = 61.66 °C
  - 30 on/off cycles per year with $\triangle T$ = 10.0 °C
  - 32 °C board temperature at 2.0% of time
  - 60 °C board temperature at 1.5% of time
  - 85 °C board temperature at 2.3% of time.

- The STO is a type A safety component as defined in IEC 61508-2.
- Relevant failure modes:
  - The STO trips spuriously (safe failure)
  - The STO does not activate when requested

  A fault exclusion on the failure mode “short circuit on printed circuit board” has been made (EN 13849-2, table D.5). The analysis is based on an assumption that one failure occurs at one time. No accumulated failures have been analyzed.
- STO reaction time (shortest detectable break): 1 ms
- STO response time: 2 ms (typical), 5 ms (maximum)
- Fault detection time: Channels in different states for longer than 200 ms
- Fault reaction time: Fault detection time + 10 ms
- STO fault indication (parameter *31.22*) delay: < 500 ms
- STO warning indication (parameter *31.22*) delay: < 1000 ms

Abbreviations

Abbr.	Reference	Description
Cat.	EN ISO 13849-1	Classification of the safety-related parts of a control system in respect of their resistance to faults and their subsequent behavior in the fault condition, and which is achieved by the structural arrangement of the parts, fault detection and/or by their reliability. The categories are: B, 1, 2, 3 and 4.
CCF	EN ISO 13849-1	Common cause failure (%)
DC	EN ISO 13849-1	Diagnostic coverage
HFT	IEC 61508	Hardware fault tolerance
$MTTF_D$	EN ISO 13849-1	Mean time to dangerous failure: (Total number of life units) / (Number of dangerous, undetected failures) during a particular measurement interval under stated conditions
PFD_{avg}	IEC 61508	Average probability of dangerous failure on demand, that is, mean unavailability of a safety-related system to perform the specified safety function when a demand occurs
PFH	IEC 61508	Average frequency of dangerous failures per hour, that is, average frequency of a dangerous failure of a safety related system to perform the specified safety function over a given period of time
PL	EN ISO 13849-1	Performance level. Levels a…e correspond to SIL.
SC	IEC 61508	Systematic capability
SFF	IEC 61508	Safe failure fraction (%)
SIL	IEC 61508	Safety integrity level (1…3)
SILCL	IEC/EN 62061	Maximum SIL (level 1…3) that can be claimed for a safety function or subsystem
STO	IEC/EN 61800-5-2	Safe torque off
T_1	IEC 61508-6	Proof test interval. T_1 is a parameter used to define the probabilistic failure rate (PFH or PFD) for the safety function or subsystem. Performing a proof test at a maximum interval of T_1 is required to keep the SIL capability valid. The same interval must be followed to keep the PL capability (EN ISO 13849) valid. See also section *Maintenance* on page *356*.
T_M	EN ISO 13849-1	Mission time: the period of time covering the intended use of the safety function/device. After the mission time elapses, the safety device must be replaced. Note that any T_M values given cannot be regarded as a guarantee or warranty.

Declaration of conformity

Declaration of conformity (3AXD10000437229) is available on the Internet. See section *Document library on the Internet* on the inside of the back cover.

Certificate

TÜV certificate (3AXD10000470695) is available on the Internet. See section *Document library on the Internet* on the inside of the back cover.

You can also find the TÜV certificate in *ACH580-01 quick installation and start-up guide for frames R1 to R5* (3AXD50000044861 [English]) or *ACH580-01 quick installation and start-up guide for frames R6 to R9* (3AXD50000036602 [English]), as appropriate, delivered with the drive.

14

Optional I/O extension modules

Contents of this chapter

This chapter describes how to install and start up the optional CHDI-01, CMOD-01 and CMOD-02 extension modules. The chapter also contains diagnostics and technical data.

CHDI-01 115/230 V digital input extension module

Safety instructions

WARNING! Obey the safety instructions for the drive. If you ignore the safety instructions, injury or death can occur.

Hardware description

Product overview

The CHDI-01 115/230 V digital input extension module expands the inputs of the drive control board. It has six high voltage inputs and two relay outputs.

Layout

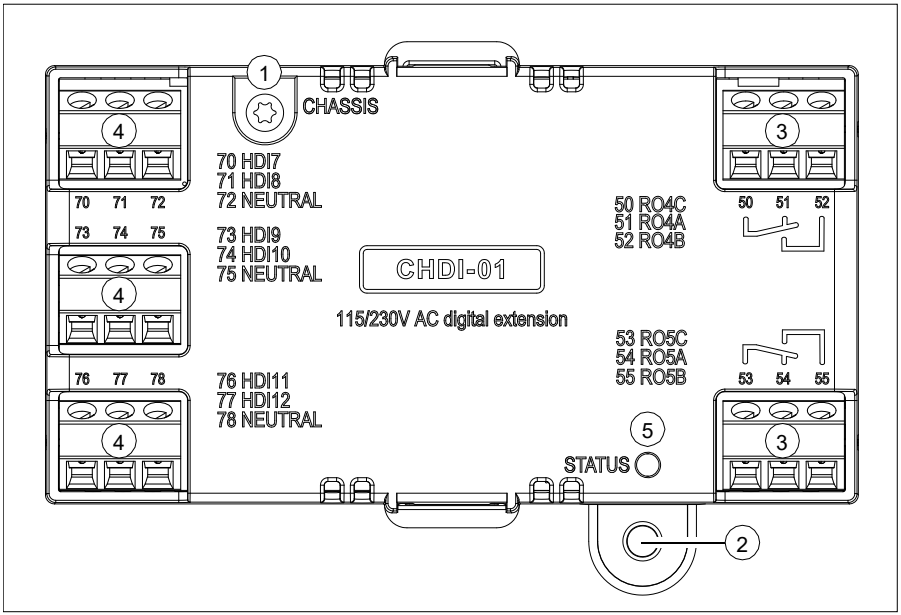

Item	Description	Additional information
1	Grounding screw	-
2	Hole for mounting screw	-
3	3-pin terminal blocks for relay outputs	Page *365*
4	3-pin terminal block for 115/230 V inputs	Page *365*
5	Diagnostic LED	Page *367*

Mechanical installation

Necessary tools and instructions

- Screwdriver and a set of suitable bits.

Unpacking and checking the delivery

1. Open the option package.
2. Make sure that the package contains:
   - CHDI-01 high voltage digital extension module
   - mounting screw.
3. Make sure that there are no signs of damage.

Installing the module

Note: Frame R1: Do not install this module before you have installed the power cables as it would cover the power terminals,

See section *Installing option modules* on page *159* (IEC) or *Installing option modules* on page *213* (North America).

Electrical installation

Warnings

WARNING! Obey the instructions in chapter *Safety instructions* on page *15*. If you ignore them, injury or death, or damage to the equipment can occur. If you are not a qualified electrical professional, do not do electrical work.

Make sure that the drive is disconnected from the input power during installation. If the drive is already connected to the input power, wait for 5 minutes after disconnecting the input power.

Necessary tools and instructions

- Screwdriver and a set of suitable bits
- Cabling tools

Terminal designations

For more detailed information on the connectors, see section *Technical data* on page *376*.

Relay outputs

Marking		Description
50	RO4C	Common, C
51	RO4A	Normally closed, NC
52	RO4B	Normally open, NO
53	RO5C	Common, C
54	RO5A	Normally closed, NC
55	RO5B	Normally open, NO

115/230 V inputs

Marking		Description
70	HDI7	115/230 V input 1
71	HDI8	115/230 V input 2
72	NEUTRAL[1)]	Neutral point

Marking		Description
73	HDI9	115/230 V input 3
74	HDI10	115/230 V input 4
75	NEUTRAL[1)]	Neutral point
76	HDI11	115/230 V input 5
77	HDI12	115/230 V input 6
78	NEUTRAL[1)]	Neutral point

[1)] Neutral points 72, 75 and 78 are connected.

General cabling instructions

Obey the instructions given in chapter *Guidelines for planning the electrical installation* on page *81*.

Wiring

Connect the external control cables to the applicable module terminals. Ground the outer shield of the cables 360 degrees under a grounding clamp on the grounding shelf of the control cables.

Relay output connection example

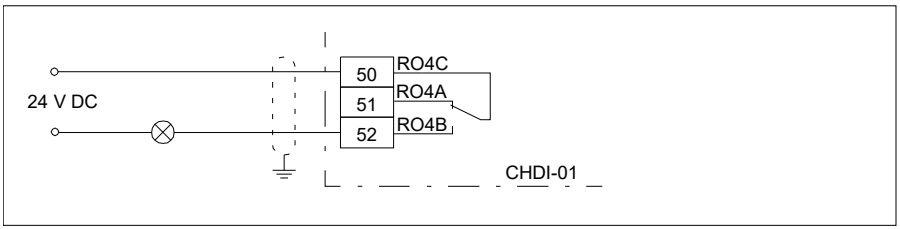

Digital input connection example

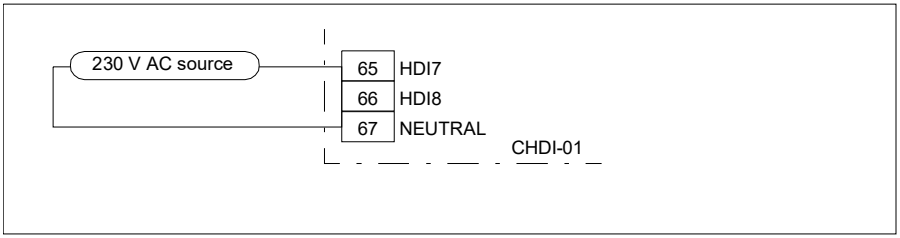

Start-up

Setting the parameters

1. Power up the drive.
2. If no warning is shown,
   - make sure that the value of both parameter 15.02 Detected extension module and parameter 15.01 Extension module type is CHDI-01.

   If warning A7AB Extension I/O configuration failure is shown,
   - make sure that the value of parameter 15.02 Detected extension module is CHDI-01.
   - set parameter 15.01 Extension module type to CHDI-01.

   You can now see the parameters of the extension module in parameter group 15 I/O extension module.
3. Set the parameters of the extension module to applicable values.

Parameter setting example for relay output

This example shows how make relay output RO4 of the extension module indicate the reverse direction of rotation of the motor with a one-second delay.

Parameter	Setting
15.07 RO4 source	Reverse
15.08 RO4 ON delay	1 s
15.09 RO4 OFF delay	1 s

Diagnostics

Faults and warning messages

Warning A7AB Extension I/O configuration failure.

LEDs

The extension module has one diagnostic LED.

Color	Description
Green	The extension module is powered up.

Technical data

Dimension drawing:

The dimensions are in millimeters and [inches].

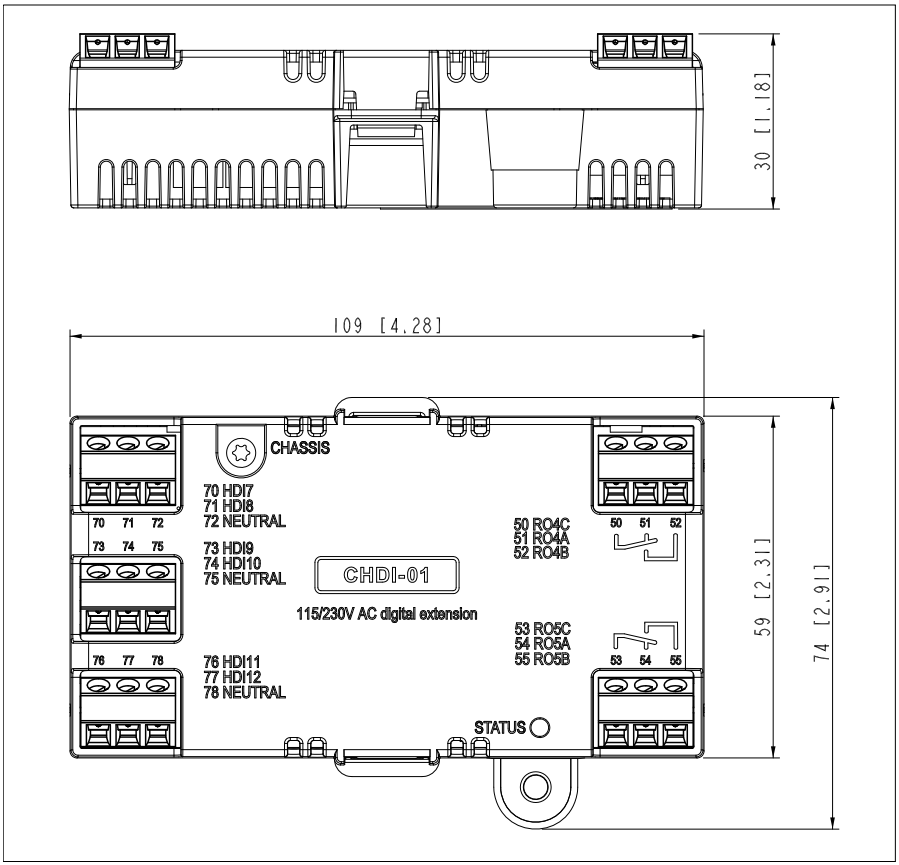

Installation: Into an option slot on the drive control board

Degree of protection: IP20

Ambient conditions: See the drive technical data.

Package: Cardboard

Isolation areas:

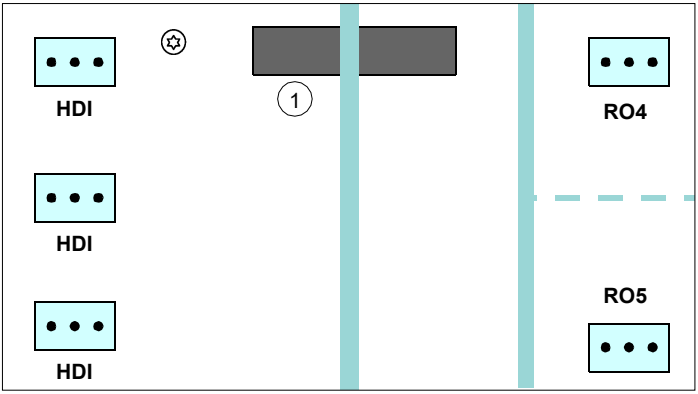

Symbol	Description
1	Plugged to drive **SLOT2**
	Reinforced insulation (IEC 61800-5-1:2007)
	Functional insulation (IEC 61800-5-1:2007)

Relay outputs (50…52, 53…55):

- Wire size max. 1.5 mm^2
- Minimum contact rating: 12 V / 10 mA
- Maximum contact rating: 250 V AC / 30 V DC / 2 A
- Maximum breaking capacity: 1500 VA

115/230 V inputs (70…78):

- Wire size max. 1.5 mm^2
- Input voltage: 115 to 230 V AC ±10%
- Maximum current leakage in digital off state: 2 mA

CMOD-01 multifunction extension module (external 24 V AC/DC and digital I/O)

Safety instructions

WARNING! Obey the safety instructions for the drive. If you ignore the safety instructions, injury or death can occur.

Hardware description

Product overview

The CMOD-01 multifunction extension module (external 24 V AC/DC and digital I/O) expands the outputs of the drive control board. It has two relay outputs and one transistor output, which can function as a digital or frequency output.

In addition, the extension module has an external power supply interface, which can be used to power up the drive control board in case the drive power supply fails. If you do not need the back-up power supply, you do not have to connect it because the module is powered from the drive control board by default.

Note: In frames R6…R9, you do not need a CMOD-01 module to use external 24 V AC/DC supply. The external supply is connected directly to terminals 40 and 41 on the control board.

WARNING! Do not connect the +24 V AC cable to the control board ground when the control board is powered using an external 24 V AC supply.

Layout

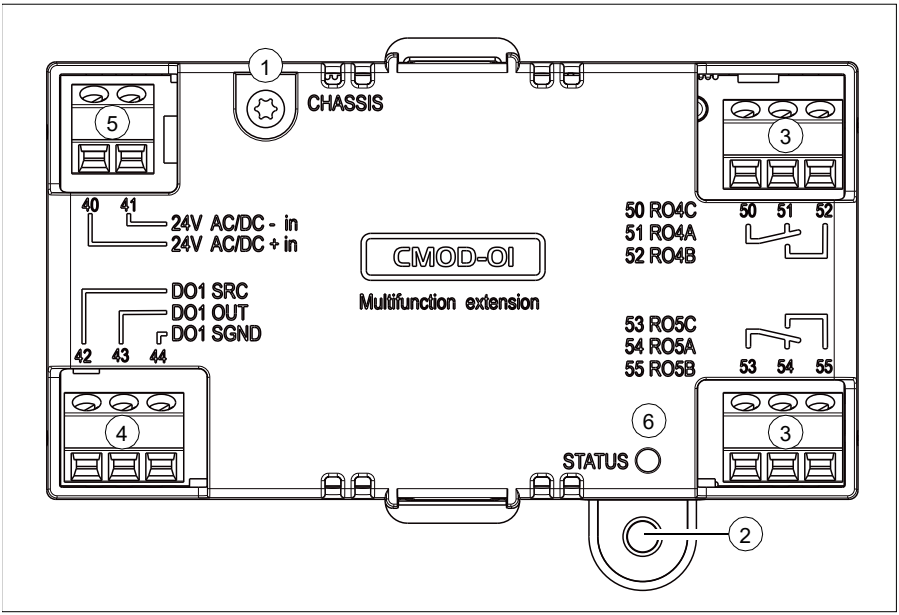

Item	Description	Additional information
1	Grounding screw	Page *371*
2	Hole for mounting screw	Page *371*
3	3-pin terminal blocks for relay outputs	Page *372*
4	3-pin terminal block for transistor output	Page *372*
5	2-pin terminal block for external power supply	Page *372*
6	Diagnostic LED	Page *375*

Mechanical installation

Necessary tools and instructions

- Screwdriver and a set of suitable bits.

Unpacking and checking the delivery

1. Open the option package.
2. Make sure that the package contains:
   - CMOD-01 multifunction extension module
   - mounting screw.
3. Make sure that there are no signs of damage.

Installing the module

Note: Frame R1: Do not install this module before you have installed the power cables as it would cover the power terminals,

See section *Installing option modules* on page *159* (IEC) or *Installing option modules* on page *213* (North America).

Electrical installation

Warnings

WARNING! Obey the instructions in chapter *Safety instructions* on page *15*. If you ignore them, injury or death, or damage to the equipment can occur. If you are not a qualified electrical professional, do not do electrical work.

Make sure that the drive is disconnected from the input power during installation. If the drive is already connected to the input power, wait for 5 minutes after disconnecting the input power.

Necessary tools and instructions

- Screwdriver and a set of suitable bits
- Cabling tools

Terminal designations

For more detailed information on the connectors, see section *Technical data* on page *376*.

Relay outputs

Marking		Description
50	RO4C	Common, C
51	RO4A	Normally closed, NC
52	RO4B	Normally open, NO
53	RO5C	Common, C
54	RO5A	Normally closed, NC
55	RO5B	Normally open, NO

Transistor output

Marking		Description
42	DO1 SRC	Source input
43	DO1 OUT	Digital or frequency output
44	DO1 SGND	Ground (earth) potential

External power supply

The external power supply is needed only if you want to connect an external back-up power supply for the drive control board.

Note: Frames R1…R5 need CMOD-01 for connecting external power supply, frames R6…R9 have corresponding terminals 40 and 41 on the control board.

Marking		Description
40	24V AC/DC + in	External 24 V (AC/DC) input
41	24V AC/DC - in	External 24 V (AC/DC) input

General cabling instructions

Obey the instructions given in chapter *Guidelines for planning the electrical installation* on page *81*.

Wiring

Connect the external control cables to the applicable module terminals. Ground the outer shield of the cables 360 degrees under a grounding clamp on the grounding shelf of the control cables.

Relay output connection example

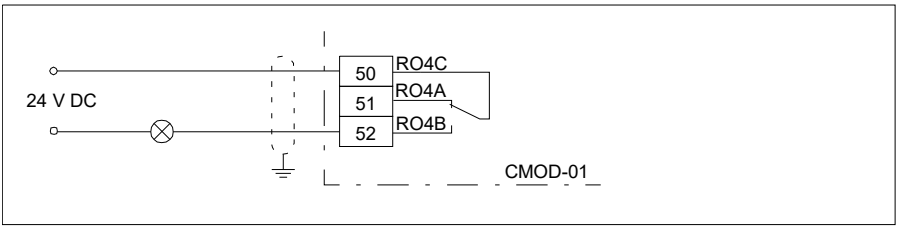

Digital output connection example

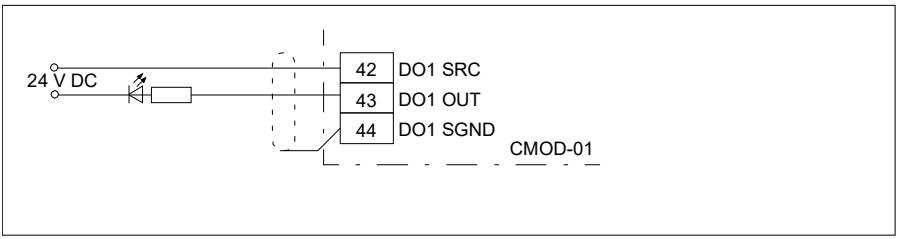

Frequency output connection example

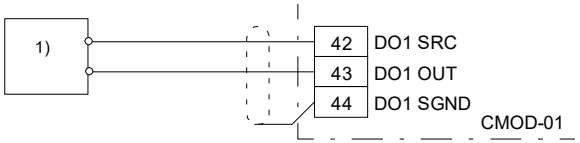

1) An externally supplied frequency indicator which provides, for example:

- a 40 mA / 12 V DC power supply for the sensor circuit (CMOD frequency output)
- suitable voltage pulse input (10 Hz … 16 kHz).

External power supply connection example

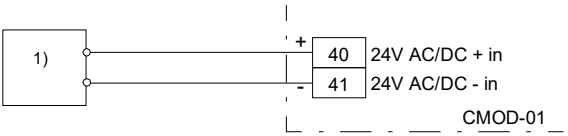

1) External power supply, 24 V AC/DC

WARNING! Do not connect the +24 V AC cable to the control board ground when the control board is powered using an external 24 V AC supply.

Start-up

Setting the parameters

1. Power up the drive.
2. If no warning is shown,
   - make sure that the value of both parameter 15.02 Detected extension module and parameter 15.01Extension module type is CMOD-01.

   If warning A7AB Extension I/O configuration failure is shown,
   - make sure that the value of parameter 15.02 Detected extension module is CMOD-01.
   - set parameter 15.01 Extension module type to CMOD-01.

   You can now see the parameters of the extension module in parameter group 15 I/O extension module.
3. Set the parameters of the extension module to applicable values.

Examples are given below.

Parameter setting example for relay output

This example shows how make relay output RO4 of the extension module indicate the reverse direction of rotation of the motor with a one-second delay.

Parameter	Setting
15.07 RO4 source	Reverse
15.08 RO4 ON delay	1 s
15.09 RO4 OFF delay	1 s

Parameter setting example for digital output

This example shows how to make digital output DO1 of the extension module indicate the reverse direction of rotation of the motor with a one-second delay.

Parameter	Setting
15.22 DO1 configuration	Digital output
15.23 DO1 source	Reverse
15.24 DO1 ON delay	1 s
15.25 DO1 OFF delay	1 s

Parameter setting example for frequency output

This example shows how to make digital output DO1 of the extension module indicate the motor speed 0... 1500 rpm with a frequency range of 0...10000 Hz.

Parameter	Setting
15.22 DO1 configuration	Frequency output
15.33 Freq out 1 source	01.01
15.34 Freq out 1 src min	0
15.35 Freq out 1 src max	1500.00
15.36 Freq out 1 at src min	1000 Hz
15.37 Freq out 1 at src max	10000 Hz

Diagnostics

Faults and warning messages

Warning A7AB Extension I/O configuration failure.

LEDs

The extension module has one diagnostic LED.

Color	Description
Green	The extension module is powered up.

Technical data

Dimension drawing:

The dimensions are in millimeters and [inches].

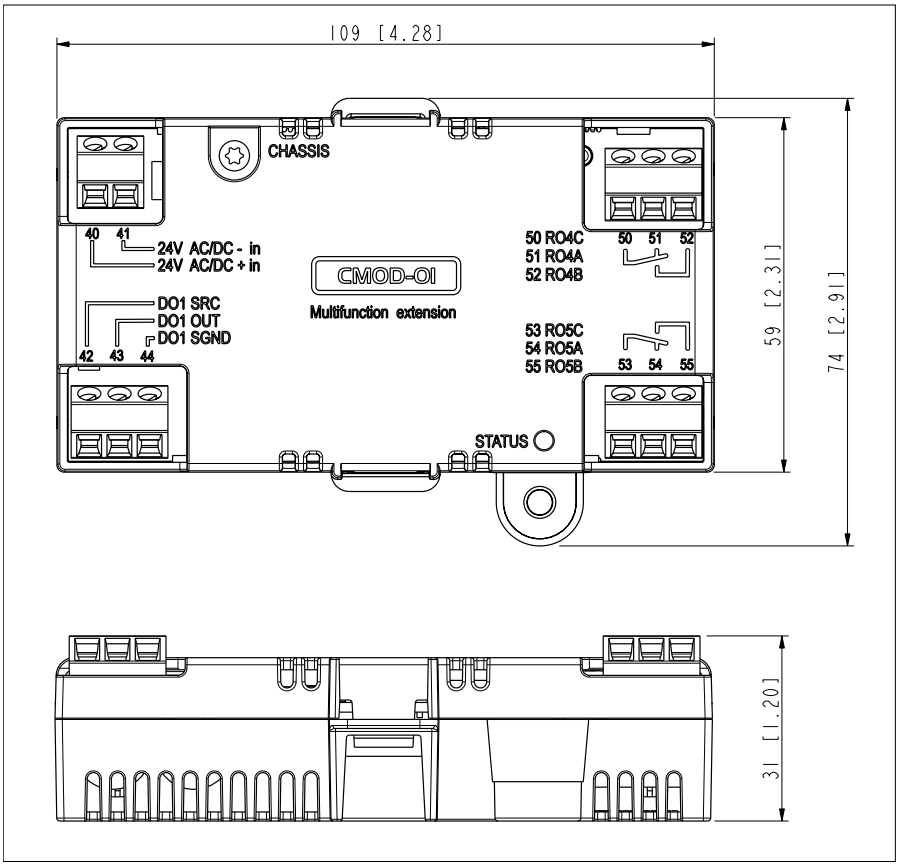

Installation: Into an option slot on the drive control board

Degree of protection: IP20

Ambient conditions: See the drive technical data.

Package: Cardboard

Isolation areas:

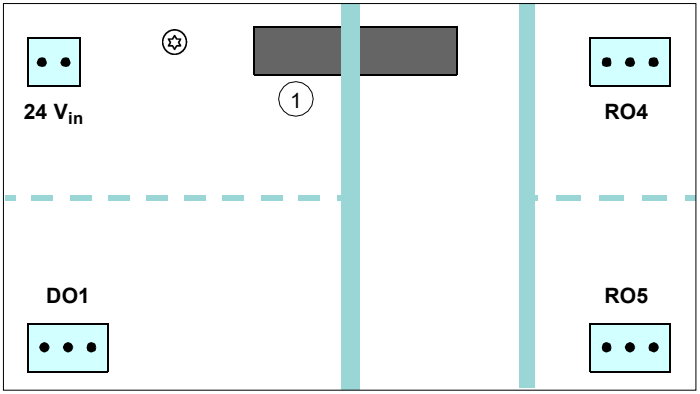

Symbol	Description
1	Plugged to drive **SLOT2**
	Reinforced insulation (IEC 61800-5-1:2007)
	Functional insulation (IEC 61800-5-1:2007)

Relay outputs (50…52, 53…55):

- Wire size max. 1.5 mm^2
- Minimum contact rating: 12 V / 10 mA
- Maximum contact rating: 250 V AC / 30 V DC / 2 A
- Maximum breaking capacity: 1500 VA6

Transistor output (42…44):

- Wire size max. 1.5 mm^2
- Type: Transistor output PNP
- Maximum load: 4 kohm
- Maximum switching voltage: 30 V DC
- Maximum switching current: 100 mA / 30 V DC, short-circuit protected
- Frequency: 10 Hz … 16 kHz
- Resolution: 1 Hz
- Inaccuracy: 0.2%

External power supply (40…41):

- Wire size max. 1.5 mm^2
- 24 V AC / V DC ±10% (GND, user potential)
- Maximum current consumption: 25 W, 1.04 A at 24 V DC

CMOD-02 multifunction extension module (external 24 V AC/DC and isolated PTC interface)

Safety instructions

WARNING! Obey the safety instructions for the drive. If you ignore the safety instructions, injury or death can occur.

Hardware description

Product overview

The CMOD-02 multifunction extension module (external 24 V AC/DC and isolated PTC interface) has a motor thermistor connection for supervising the motor temperature and one relay output, which indicates the thermistor status. To trip the drive, the user must connect this overtemperature indication back to the drive, for example, to its Safe torque off input.

In addition, the extension module has an external power supply interface, which can be used to power up the drive control board in case the drive power supply fails. If you do not need the back-up power supply, you do not have to connect it because the module is powered from the drive control board by default.

There is reinforced insulation between the motor thermistor connection, the relay output and the drive control board interface. Thus, you can connect a motor thermistor to the drive through the extension module.

Note: In frames R6…R9, you do not need a CMOD-02 module to use external 24 V AC/DC supply. The external supply is connected directly to terminals 40 and 41 on the control board.

WARNING! Do not connect the +24 V AC cable to the control board ground when the control board is powered using an external 24 V AC supply.

Layout

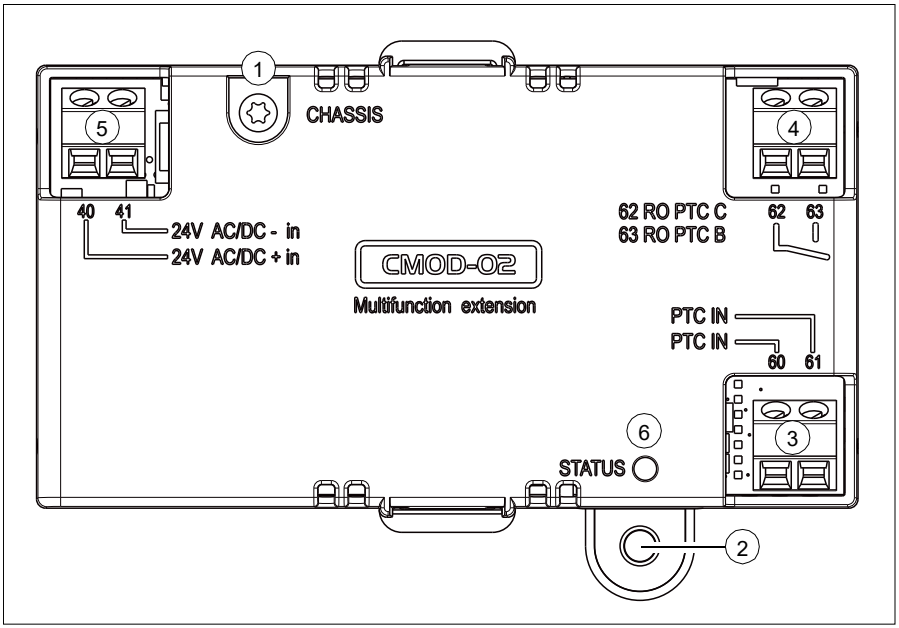

Item	Description	Additional information
1	Grounding screw	Page *380*
2	Hole for mounting screw	Page *380*
3	2-pin terminal block for motor thermistor connection	Page *381*
4	2-pin terminal block for relay output	Page *381*
5	2-pin terminal block for external power supply	Page *381*
6	Diagnostic LED	Page *384*

Mechanical installation

Necessary tools and instructions

- Screwdriver and a set of suitable bits

Unpacking and checking the delivery

1. Open the option package.
2. Make sure that the package contains:
   - CMOD-02 multifunction extension module
   - mounting screw
3. Make sure that there are no signs of damage.

Installing the module

Note: Frame R1: Do not install this module before you have installed the power cables as it would cover the power terminals,

See section *Installing option modules* on page *159* (IEC) or *Installing option modules* on page *213* (North America).

Electrical installation

Warnings

WARNING! Obey the instructions in chapter *Safety instructions* on page *15*. If you ignore them, injury or death, or damage to the equipment can occur. If you are not a qualified electrical professional, do not do electrical work.

Make sure that the drive is disconnected from the input power during installation. If the drive is already connected to the input power, wait for 5 minutes after disconnecting the input power.

Necessary tools and instructions

- Screwdriver and a set of suitable bits
- Cabling tools

Terminal designations

For more detailed information on the connectors, see section *Technical data* on page *385*.

Motor thermistor connection

Marking		Description
60	PTC IN	PTC connection
61	PTC IN	Ground (earth) potential

Relay output

Marking		Description
62	RO PTC C	Common, C
63	RO PTC B	Normally open, NO

External power supply

The external power supply is needed only if you want to connect an external back-up power supply for the drive control board.

Note: Frames R1…R5 need CMOD-01 for connecting external power supply, frames R6…R9 have corresponding terminals 40 and 41 on the control board.

Marking		Description
40	24V AC/DC + in	External 24 V (AC/DC) input
41	24V AC/DC - in	External 24 V (AC/DC) input

General cabling instructions

Obey the instructions given in chapter *Guidelines for planning the electrical installation* on page *81*.

Wiring

Connect the external control cables to the applicable module terminals. Ground the outer shield of the cables 360 degrees under a grounding clamp on the grounding shelf of the control cables

Motor thermistor connection example

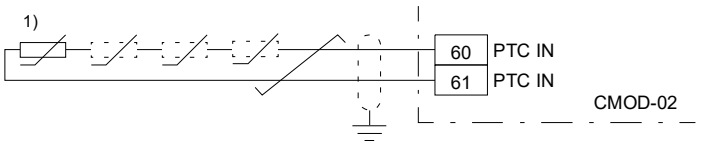

1) One or 3…6 PTC thermistors connected in series.

The PTC input is reinforced/double insulated. If the motor part of the PTC sensor and wiring are reinforced/double insulated, voltages on the PTC wiring are within SELV limits.

If the motor PTC circuit is not reinforced/double insulated (ie, it is basic insulated), it is mandatory to use reinforced/double insulated wiring between the motor PTC and CMOD-02 PTC terminal.

Relay output connection example

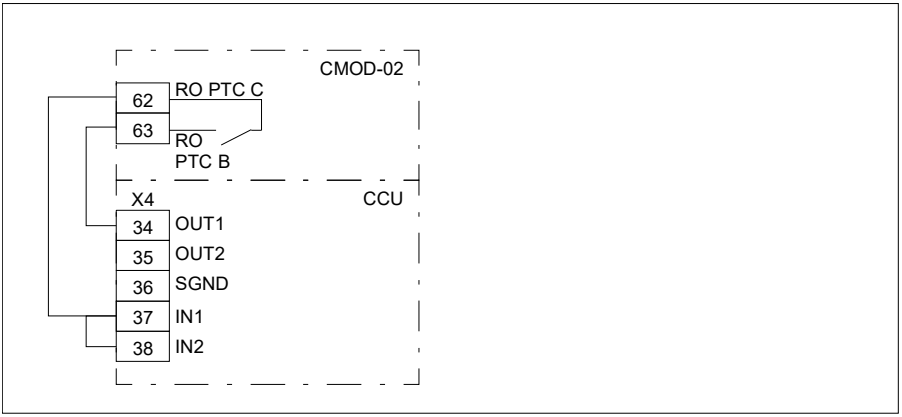

Power supply connection example

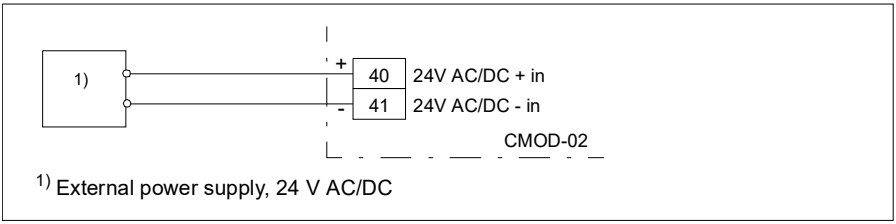

WARNING! Do not connect the +24 V AC cable to the control board ground when the control board is powered using an external 24 V AC supply.

Start-up

Setting the parameters

1. Power up the drive.
2. If no warning is shown,
   - make sure that the value of both parameter 15.02 Detected extension module and parameter 15.01 Extension module type is CMOD-02.

   If warning A7AB Extension I/O configuration failure is shown,
   - make sure that the value of parameter 15.02 Detected extension module is CMOD-02.
   - set parameter 15.01 Extension module type to CMOD-02.

You can now see the parameters of the extension module in parameter group 15 I/O extension module.

Diagnostics

Faults and warning messages

Warning A7AB Extension I/O configuration failure.

LEDs

The extension module has one diagnostic LED.

Color	Description
Green	The extension module is powered up.

Technical data

Dimension drawing:

The dimensions are in millimeters and [inches].

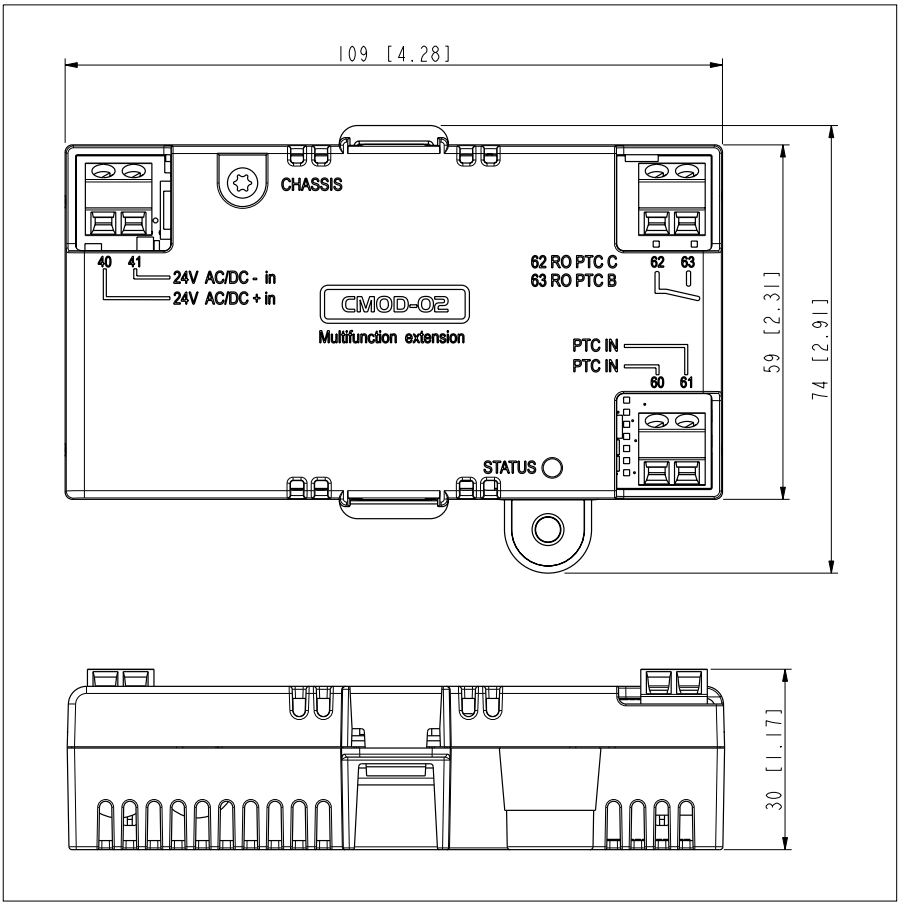

Installation: Into an option slot on the drive control board

Degree of protection: IP20

Ambient conditions: See the drive technical data.

Package: Cardboard

Isolation areas:

CMOD-02

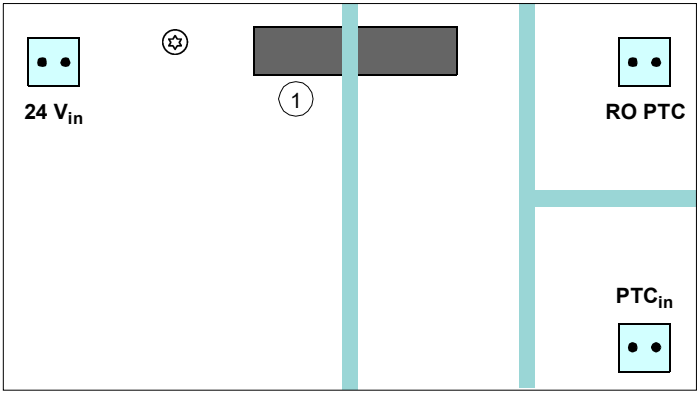

Symbol	Description
1	Plugged to drive **SLOT2**
	Reinforced insulation (IEC 61800-5-1:2007)
	Functional insulation (IEC 61800-5-1:2007)

Motor thermistor connection (60…61):

- Wire size max. 1.5 mm^2
- Supported standards: DIN 44081 and DIN 44082
- Number of PTC thermistor relays: 1 or 3…6 in series
- Triggering threshold: 3.6 kohm ±10%
- Recovery threshold: 1.6 kohm ±10%
- PTC terminal voltage: $\leq$ 5.0 V
- PTC terminal current: < 1 mA
- Short-circuit detection: < 50 ohm ±10%

Relay output (62…63):

- Wire size max. 1.5 mm^2
- Maximum contact rating: 250 V AC / 30 V DC / 5 A
- Maximum breaking capacity: 1000 VA

External power supply (40…41):

- Wire size max. 1.5 mm^2
- 24 V AC / V DC ±10% (GND, user potential)
- Maximum current consumption: 25 W, 1.04 A at 24 V DC *Installing option modules* on page *159* (IEC) or *Installing option modules* on page *213* (North America)

15

Common mode, d*u*/d*t* and sine filters

Content of this chapter

This chapter describes how to select external filters for the drive.

Common mode filters

When is a common mode filter needed?

See section *Checking the compatibility of the motor and drive*, page *60*.

Common mode filter kits are available from ABB, see the table on page *390*. A kit includes three wound cores. For installation instructions of the cores, see the instruction included in the core package.

d*u*/d*t* filters

When is a d*u*/d*t* filter needed?

See section *Checking the compatibility of the motor and drive*, page *60*.

See the table of d*u*/d*t* filters on page *391*.

Common mode filter types

IEC ratings at U_N = 400 V and 480V, UL (NEC) ratings at U_N = 460 V

For d*u*/d*t* filters for smaller types, contact your local representative.

Type ACH580 -01-	Common mode filters ABB drives	Frame size	North American type ACH580-01
062A-4	64315811	R4	052A-4
073A-4	64315811	R4	065A-4
088A-4	64315811	R5	078A-4 [1)]
106A-4	64315811	R5	096A-4
145A-4	3AXD50000017269	R6	124A-4
169A-4	3AXD50000017270	R7	156A-4
206A-4	3AXD50000017270	R7	180A-4
246A-4	3AXD50000018001	R8	240A-4
293A-4	3AXD50000018001	R8	260A-4 [1)]
363A-4	3AXD50000017940	R9	361A-4
430A-4	3AXD50000017940	R9	414A-4

3AXD00000586715.xls K

[1)] Not available in North America

d*u*/d*t* filter types

IEC ratings at U_N = 400 V and 480V, UL (NEC) ratings at U_N = 460 V

Type ACH580 -01-	d*u*/d*t* filters ABB drives	Frame size	North American type ACH580-01
02A7-4	NOCH0016-6x	R1	02A1-4
03A4-4	NOCH0016-6x	R1	03A0-4
04A1-4	NOCH0016-6x	R1	03A5-4
05A7-4	NOCH0016-6x	R1	04A8-4
07A3-4	NOCH0016-6x	R1	06A0-4
09A5-4	NOCH0016-6x	R1	07A6-4
12A7-4	NOCH0016-6x	R1	012A-4
018A-4	NOCH0016-6x or NOCH0030-6x	R2	014A-4
026A-4	NOCH0030-6x	R2	023A-4
033A-4	NOCH0070-6x	R3	027A-4
039A-4	NOCH0070-6x	R3	034A-4
046A-4	NOCH0070-6x	R3	044A-4
062A-4	NOCH0070-6x	R4	052A-4
073A-4	NOCH0070-6x or NOCH0120-6x	R4	065A-4
088A-4	NOCH0120-6x	R5	078A-4
106A-4	NOCH0120-6x	R5	096A-4
145A-4	FOCH0260-70	R6	124A-4
169A-4	FOCH0260-70	R7	156A-4
206A-4	FOCH0260-70	R7	180A-4
246A-4	FOCH0260-70	R8	240A-4
293A-4	FOCH0260-70	R8	260A-4
363A-4	FOCH0320-50	R9	361A-4
430A-4	FOCH0320-50	R9	414A-4

3AXD00000586715.xls K

Description, installation and technical data of the FOCH filters

See *FOCH du/dt filters hardware manual* (3AFE68577519 [English]).

Description, installation and technical data of the NOCH filters

See *AOCH and NOCH du/dt filters hardware manual* (3AFE58933368 [English]).

Sine filters

Selecting a sine filter for the drive

IEC ratings at U_N = 400 V and 480V, UL (NEC) ratings at U_N = 460 V

Type ACH580 -01-	Sine filter type		Frame size	North American type ACH580-01
	IP00	IP20		
02A7-4	B84143V0006R231	B84143V0004R229 + B84143Q0002R229	R1	02A1-4
03A4-4	B84143V0006R231	B84143V0004R229 + B84143Q0002R229	R1	03A0-4
04A1-4	B84143V0006R231	B84143V0004R229 + B84143Q0002R229	R1	03A5-4
05A7-4	B84143V0006R231	B84143V0006R229 + B84143Q0002R229	R1	04A8-4
07A3-4	B84143V0007R231	B84143V0011R229 + B84143Q0004R229	R1	06A0-4 [1)]
09A5-4	B84143V0012R231	B84143V0011R229 + B84143Q0004R229	R1	07A6-4
12A7-4	B84143V0012R231	B84143V0016R229 + B84143Q0006R229	R1	012A-4
018A-4	B84143V0016R229	B84143V0016R229 + B84143Q0006R229	R2	014A-4
026A-4	B84143V0038R231	B84143V0025R229 + B84143Q0008R229	R2	023A-4
033A-4	B84143V0038R231	B84143V0033R229 + B84143Q0008R229	R3	027A-4
039A-4	B84143V0038R231	B84143V0050R229 + B84143Q0010R229	R3	034A-4
046A-4	B84143V0043R231	B84143V0050R229 + B84143Q0010R229	R3	044A-4
062A-4	B84143V0064R231	B84143V0066R229 + B84143Q0010R229	R4	052A-4
073A-4	B84143V0064R231	B84143V0066R229 + B84143Q0010R229	R4	065A-4
088A-4	B84143V0077R231	B84143V0095R229 + B84143Q0012R229	R5	078A-4 [1)]
106A-4	B84143V0091R231	B84143V0095R229 + B84143Q0012R229	R5	096A-4
145A-4	B84143V0145R231	B84143V0162S229 + B84143Q0014R229	R6	124A-4
169A-4	B84143V0209R231	B84143V0162S229 + B84143Q0014R229	R7	156A-4
206A-4	B84143V0209R231	B84143V0230S229 + B84143Q0016R229	R7	180A-4

Type ACH580 -01-	Sine filter type		Frame size	North American type ACH580-01
	IP00	IP20		
246A-4	B84143V0209R231	B84143V0230S229 + B84143Q0016R229	R8	240A-4
293A-4	B84143V0249R231	B84143V0390S229 + B84143Q0018R229	R8	260A-4[1)]
363A-4	B84143V0390S229	B84143V0390S229 + B84143Q0018R229	R9	361A-4
430A-4	B84143V0390S229	B84143V0390S229 + B84143Q0018R229	R9	414A-4

3AXD00000586715.xls K

[1)] Not available in North America

Description, installation and technical data

See *Sine filters hardware manual* (3AXD50000016814 [English]).

Further information

Product and service inquiries

Address any inquiries about the product to your local ABB representative, quoting the type designation and serial number of the unit in question. A listing of ABB sales, support and service contacts can be found by navigating to abb.com/searchchannels.

Product training

For information on ABB product training, navigate to new.abb.com/service/training.

Providing feedback on ABB Drives manuals

Your comments on our manuals are welcome. Navigate to new.abb.com/drives/manuals-feedback-form.

Document library on the Internet

You can find manuals and other product documents in PDF format on the Internet at abb.com/drives/documents.

abb.com/drives

3AXD50000044839B

© Copyright 2018 ABB. All rights reserved.
Specifications subject to change without notice.

3AXD50000044839 Rev B (EN) 2018-12-20